UNITED STATES PATENT AND TRADEMARK OFFICE

Commissioner for Patents
United States Patent and Trademark Office
P.O. Box 1450
Alexandria, VA 22313-1450
www.uspto.gov

COPY MAILED

DEC 0 9 2009

OFFICE OF PETITIONS

HOFFMANN & BARON, LLP
6900 JERICHO TURNPIKE
SYOSSET NY 11791

In re Patent No. 7,553,861 :
Kroth, et al. : DECISION DISMISSING
Application No. 11/409,481 : REQUEST FOR
Issue Date: June 30, 2009 : RECONSIDERATION OF
Filed: April 21, 2006 : PATENT TERM ADJUSTMENT
Attorney Docket No. : UNDER 37 CFR 1.705
1491-3 :

This is in response to the REQUEST FOR RECONSIDERATION OF PATENT TERM ADJUSTMENT UNDER 37 C.F.R. §1.705(d), filed August 20, 2009. Patentees request that the determination of patent term adjustment be corrected from six hundred twenty-two (622) days to six hundred ninety-two (692) days.

The request for reconsideration of patent term adjustment is **DISMISSED** with respect to making any change in the patent term adjustment determination under 35 U.S.C. § 154(b) of 443 days.

On June 30, 2009, the application matured into U.S. Patent No. 7,553,861, with a revised patent term adjustment of 622 days. The Office determined that the 70 days of Office delay pursuant to 35 U.S.C. 154(b)(1)(B) and 37 CFR 1.702(b) overlaps with the 622 days of Office delay pursuant to 35 U.S.C. § 154(b)(1)(A) and 37 CFR 1.702(a)(1) accorded prior to the issuance of the patent. As such, 0 additional days of patent term adjustment were entered at issuance under the three-year pendency provision. Given the applicant delay of 0 days, the patent issued with a revised patent term adjustment of 622 (622 - 0) days.

On August 20, 2009, patentees timely submitted this request for reconsideration of patent term adjustment, asserting that the correct number of days of Patent Term Adjustment is 622 days under the court's interpretation of the overlap provision as set forth in Wyeth v. Dudas, 580 F. Supp. 2d 138, 88 U.S.P.Q. 2d 1538 (D.D.C. 2008). Patentees maintain that the total non-overlapping PTO delay under § 154(b)(1)(A) & (B) is 692 (622 +

70) days. Further, given the applicant delay of 0 days, patentees assert entitlement to 692 (622 + 70 - 0) days of patent term adjustment.

Patentees' interpretation of the period of overlap has been considered, but found inconsistent with the Office's interpretation of the overlap provision, 35 U.S.C. 154(b)(2)(A). 35 U.S.C. 154(b)(2)(A) limits the adjustment of patent term, as follows:

> to the extent that the periods of delay attributable to grounds specified in paragraph (1) overlap, the period of any adjustment granted under this subsection shall not exceed the actual number of days the issuance of the patent was delayed.

As explained in *Explanation of 37 CFR 1.703(f) and of the United States Patent and Trademark Office Interpretation of 35 U.S.C. 154(b)(2)(A)*, 69 Fed. Reg. 34283 (June 21, 2004), the Office interprets 35 U.S.C. 154(b)(2)(A) as permitting either patent term adjustment under 35 U.S.C. 154(b)(1)(A)(i)-(iv), or patent term adjustment under 35 U.S.C. 154(b)(1)(B), but not as permitting patent term adjustment under both 35 U.S.C. 154(b)(1)(A)(i)-(iv) and 154(b)(1)(B). Accordingly, the Office implements the overlap provision as follows:

> If an application is entitled to an adjustment under 35 U.S.C. 154(b)(1)(B), the entire period during which the application was pending (except for periods excluded under 35 U.S.C. 154(b)(1)(B)(i)-(iii)), and not just the period beginning three years after the actual filing date of the application, is the period of delay under 35 U.S.C. 154(b)(1)(B) in determining whether periods of delay overlap under 35 U.S.C. 154(b)(2)(A). Thus, any days of delay for Office issuance of the patent more than 3 years after the filing date of the application, which overlap with the days of patent term adjustment accorded prior to the issuance of the patent will not result in any additional patent term adjustment. See 35 U.S.C. 154(b)(1)(B), 35 U.S.C. 154(b)(2)(A), and 37 CFR § 1.703(f). See *Changes to Implement Patent Term Adjustment Under Twenty Year Term; Final Rule*, 65 Fed. Reg. 56366 (Sept. 18, 2000). See also *Revision of Patent Term Extension and Patent Term Adjustment Provisions; Final Rule*, 69 Fed. Reg. 21704 (April 22, 2004), 1282 Off. Gaz.

Pat. Office 100 (May 18, 2004). See also *Explanation of 37 CFR 1.703(f) and of the United States Patent and Trademark Office Interpretation of 35 U.S.C. 154(b)(2)(A)*, 69 Fed. Reg. 34283 (June 21, 2004).

Further, as stated in the *Explanation of 37 CFR 1.703(f) and of the United States Patent and Trademark Office Interpretation of 35 U.S.C. 154(b)(2)(A)*, the Office has consistently taken the position that if an application is entitled to an adjustment under the three-year pendency provision of 35 U.S.C. 154(b)(1)(B), the entire period during which the application was pending before the Office (except for periods excluded under 35 U.S.C. 154(b)(1)(B)(i)-(iii)), and not just the period beginning three years after the actual filing date of the application, is the relevant period under 35 U.S.C. 154(b)(1)(B) in determining whether periods of delay "overlap" under 35 U.S.C. 154(b)(2)(A).

This interpretation is consistent with the statute. Taken together the statute and rule provide that to the extent that periods of delay attributable to grounds specified in 35 U.S.C. 154(b)(1) and in corresponding §1.702 overlap, the period of adjustment granted shall not exceed the actual number of days the issuance of the patent was delayed.

In this instance, the relevant period under 35 U.S.C. 154(b)(1)(B) in determining whether periods of delay "overlap" under 35 U.S.C. 154(b)(2)(A) is the period during which the application was pending before the Office beginning on the application filing date under 35 U.S.C. 111(a), April 21, 2006, and ending on the date of issuance of the patent, June 30, 2009, (not including any other periods excluded under 35 U.S.C. 154(b)(1)(B)(i)-(iii)).

Pursuant to 35 U.S.C. 154(b)(1)(A) and 37 CFR 1.702(a)(1), 622 days of patent term adjustment were accorded during the pendency of the application for Office delay. Pursuant to 35 U.S.C. 154(b)(1)(B) and 37 CFR 1.702(b), 70 days of patent term adjustment accrued for Office issuance of the patent more than 3 years after the filing date of the application.

The 70 days of patent term adjustment under 37 CFR 1.702(b) overlap with the 622 days of patent term adjustment under 37 CFR 1.702(a)(1). Entry of both the 622 days and the 70 days is neither permitted nor warranted. 622 days is the actual number of days issuance of the patent was delayed.

Accordingly, at issuance, the Office properly entered 0 additional days of adjustment pursuant to § 1.702(b) for a total of the greater period of 622 days for Office delay.

In view thereof, no change will be made in the patent term adjustment of 622 days (622 days of Office delay - 0 days of applicant delay).

Deposit account 08-2461 will be charged $200.00 for the fee set forth in 37 CFR 1.18(e). No additional fees are required.

Telephone inquiries specific to this matter should be directed to Kenya A. McLaughlin, Petitions Attorney, at (571) 272-3222.

Christina Tartera Donnell

Christina Tartera Donnell
Senior Petitions Attorney
Office of Petitions

UNITED STATES PATENT AND TRADEMARK OFFICE

Commissioner for Patents
United States Patent and Trademark Office
P.O. Box 1450
Alexandria, VA 22313-1450
www.uspto.gov

Hoffman & Barron LLP
6900 Jericho Turnpike
Syosset NY 11791

COPY MAILED
MAR 18 2010

In re Patent No. 7,553,861	:
Kroth et al.	: DECISION UPON REMAND AND
Issue Date: June 30, 2009	: RECONSIDERATION OF
Application No. 11/409,481	: PATENT TERM ADJUSTMENT
Filed: April 24, 2006	: AND NOTICE OF INTENT
Attorney Docket No. 1491-3	: TO ISSUE CERTIFICATE OF
Title: DIPEPTIDYL PEPTIDASE-IV INHIBITORS	: CORRECTION

This is a decision following remand from the District Court for the District of Columbia regarding the patent term adjustment indicated on the above-identified patent. The Court remanded this matter to the U.S. Patent and Trademark Office for recalculation of the patent term adjustment in accordance with the decision in Wyeth & Elan Pharma Int'l Ltd. v. Kappos, 591 F.3d 1364 (Fed. Cir. 2010).

The patent term adjustment indicated on the above-identified patent has been recalculated as directed by the Court. The term of the above-identified patent is extended or adjusted by six hundred and ninety-two (692) days.

The application is being forwarded to the Certificates Branch for issuance of a certificate of correction indicating that the term of the above-identified patent is extended or adjusted by six hundred and ninety-two (692) days.

Telephone inquiries specific to this matter should be directed to Senior Legal Advisor, Kery A. Fries at (571) 272-7757.

/Kery A. Fries/

Kery A. Fries
Senior Legal Advisor Attorney
Office of Patent Legal Administration

Enclosure: Copy of DRAFT Certificate of Correction

UNITED STATES PATENT AND TRADEMARK OFFICE

CERTIFICATE OF CORRECTION

PATENT : 7,553,861 B2

DATED : **June 30, 2009** **DRAFT**

INVENTOR(S) : Kroth et al.

It is certified that error appears in the above-identified patent and that said Letters Patent is hereby corrected as shown below:

On the cover page,

[*] Notice: Subject to any disclaimer, the term of this patent is extended or adjusted under 35 USC 154(b) by 412 days

Delete the phrase "by 412 days" and insert – by 605 days--

Day : Wednesday

PALM INTRANET

Date: 3/17/2010
Time: 14:56:28

PTA Calculations for Application: 11/409481			
Application Filing Date:	04/21/2006	PTO Delay (PTO):	622
Issue Date of Patent:	06/30/2009	Three Years:	0
Pre-Issue Petitions:	0	Applicant Delay (APPL):	0
Post-Issue Petitions:	0	Total PTA (days):	692
PTO Delay Adjustment:	70		

File Contents History

Number	Date	Contents Description	PTO	APPL	START
66	03/17/2010	ADJUSTMENT OF PTA CALCULATION BY PTO	70		
59.5	06/10/2009	PTA 36 MONTHS			
59	06/30/2009	PATENT ISSUE DATE USED IN PTA CALCULATION			
57	05/20/2009	EXPORT TO FINAL DATA CAPTURE			
56	05/18/2009	FINISHED INITIAL DATA CAPTURE			
55	05/18/2009	DISPATCH TO FDC			
54	03/30/2009	APPLICATION IS CONSIDERED READY FOR ISSUE			
53	03/27/2009	EXPORT TO INITIAL DATA CAPTURE			
48	03/23/2009	MAIL NOTICE OF ALLOWANCE			
47	03/20/2009	ISSUE REVISION COMPLETED			
46	03/20/2009	DOCUMENT VERIFICATION			
45	03/20/2009	NOTICE OF ALLOWANCE DATA VERIFICATION COMPLETED			
44	03/20/2009	CASE DOCKETED TO EXAMINER IN GAU			
43	03/20/2009	EXAMINER'S AMENDMENT COMMUNICATION			
42	03/20/2009	NOTICE OF ALLOWABILITY			
41	03/16/2009	EXAMINER INTERVIEW SUMMARY RECORD (PTOL - 413)			
37	03/07/2007	INFORMATION DISCLOSURE STATEMENT CONSIDERED			
36	09/18/2006	INFORMATION DISCLOSURE STATEMENT CONSIDERED			
35	07/31/2006	INFORMATION DISCLOSURE STATEMENT CONSIDERED			
34	03/13/2009	DATE FORWARDED TO EXAMINER			
33	03/10/2009	RESPONSE TO ELECTION / RESTRICTION FILED			

32	03/04/2009	MAIL RESTRICTION REQUIREMENT	622		-1
31	03/02/2009	REQUIREMENT FOR RESTRICTION / ELECTION			
30	02/12/2009	CASE DOCKETED TO EXAMINER IN GAU			
29	12/15/2007	IFW TSS PROCESSING BY TECH CENTER COMPLETE			
28	12/15/2007	CASE DOCKETED TO EXAMINER IN GAU			
27.7	03/07/2007	INFORMATION DISCLOSURE STATEMENT (IDS) FILED			
27	03/07/2007	INFORMATION DISCLOSURE STATEMENT (IDS) FILED			
26	01/03/2007	PRELIMINARY AMENDMENT			
25	07/31/2006	REFERENCE CAPTURE ON IDS			
24	09/18/2006	REFERENCE CAPTURE ON IDS			
23.7	09/18/2006	INFORMATION DISCLOSURE STATEMENT (IDS) FILED			
23	09/18/2006	INFORMATION DISCLOSURE STATEMENT (IDS) FILED			
22.7	07/31/2006	INFORMATION DISCLOSURE STATEMENT (IDS) FILED			
22	07/31/2006	INFORMATION DISCLOSURE STATEMENT (IDS) FILED			
21	04/21/2006	PRELIMINARY AMENDMENT			
20	08/15/2006	APPLICATION RETURN FROM OIPE			
19	08/15/2006	APPLICATION RETURN TO OIPE			
18	08/14/2006	APPLICATION RETURN FROM OIPE			
17	08/14/2006	APPLICATION RETURN TO OIPE			
16	08/14/2006	APPLICATION RETURN FROM OIPE			
15	08/14/2006	APPLICATION IS NOW COMPLETE			
14	08/14/2006	APPLICATION RETURN TO OIPE			
13	08/14/2006	APPLICATION RETURN FROM OIPE			
12	08/14/2006	APPLICATION IS NOW COMPLETE			
11	08/14/2006	APPLICATION RETURN TO OIPE			
10	08/14/2006	APPLICATION DISPATCHED FROM OIPE			
9	08/14/2006	APPLICATION IS NOW COMPLETE			
8	07/24/2006	ADDITIONAL APPLICATION FILING FEES			
7	07/24/2006	A STATEMENT BY ONE OR MORE INVENTORS SATISFYING THE REQUIREMENT UNDER 35 USC 115, OATH OF THE APPLIC			
5	05/10/2006	CLEARED BY L&R (LARS)			
4	05/10/2006	REFERRED TO LEVEL 2 (LARS) BY OIPE CSR			

3	05/10/2006	CASE CLASSIFIED BY OIPE			
2	05/09/2006	IFW SCAN & PACR AUTO SECURITY REVIEW			
1	04/21/2006	INITIAL EXAM TEAM NN			

Search Another: Application# [ ] Search

EXPLANATION OF PTA CALCULATION

EXPLANATION OF PTE CALCULATION

To go back, right click here and select Back. To go forward, right click here and select Forward. To refresh, right click here and select Refresh.

Back to OASIS | Home page

UNITED STATES PATENT AND TRADEMARK OFFICE

Commissioner for Patents
United States Patent and Trademark Office
P.O. Box 1450
Alexandria, VA 22313-1450
www.uspto.gov

MAILED

MAR 25 2010

OFFICE OF PETITIONS

Hoffman & Barron LLP
6900 Jericho Turnpike
Syosset NY 11791

In re Patent No. 7,553,861 :
Kroth et al. : DECISION UPON REMAND AND
Issue Date: June 30, 2009 : RECONSIDERATION OF
Application No. 11/409,481 : PATENT TERM ADJUSTMENT
Filed: April 24, 2006 : AND NOTICE OF INTENT
Attorney Docket No. 1491-3 : TO ISSUE CERTIFICATE OF
Title: DIPEPTIDYL PEPTIDASE-IV : CORRECTION
INHIBITORS :

This letter is to correct the amount of time displayed on the Draft Certificate of correction. The decision properly determined 692 days but the Draft Certificate of Correction improperly listed 605 days. This is to address the confusion in the decision and Certificate of Correction.

This is a decision following remand from the District Court for the District of Columbia regarding the patent term adjustment indicated on the above-identified patent. The Court remanded this matter to the U.S. Patent and Trademark Office for recalculation of the patent term adjustment in accordance with the decision in Wyeth & Elan Pharma Int'l Ltd. v. Kappos, 591 F.3d 1364 (Fed. Cir. 2010).

The patent term adjustment indicated on the above-identified patent has been recalculated as directed by the Court. The term of the above-identified patent is extended or adjusted by six hundred and ninety-two (692) days.

The application is being forwarded to the Certificates Branch for issuance of a certificate of correction indicating that the term of the above-identified patent is extended or adjusted by six hundred and ninety-two (692) days.

Telephone inquiries specific to this matter should be directed to Senior Legal Advisor, Kery A. Fries at (571) 272-7757.

/Kery A. Fries/

Kery A. Fries
Senior Legal Advisor Attorney
Office of Patent Legal Administration
Office of Associate Commissioner
For Patent Examination Policy

Enclosure: Copy of DRAFT Certificate of Correction

UNITED STATES PATENT AND TRADEMARK OFFICE

CERTIFICATE OF CORRECTION

PATENT : 7,553,861 B2

DATED : **June 30, 2009** **DRAFT**

INVENTOR(S) : Kroth et al.

It is certified that error appears in the above-identified patent and that said Letters Patent is hereby corrected as shown below:

On the cover page,

[*] Notice: Subject to any disclaimer, the term of this patent is extended or adjusted under 35 USC 154(b) by 412 days

Delete the phrase "by 412 days" and insert – by 692 days--

UNITED STATES PATENT AND TRADEMARK OFFICE

Commissioner for Patents
United States Patent and Trademark Office
P.O. Box 1450
Alexandria, VA 22313-1450
www.uspto.gov

HAYNES BEFFEL & WOLFELD LLP
P O BOX 366
HALF MOON BAY, CA 94019

COPY MAILED

FEB 0 6 2008

OFFICE OF PETITIONS

In re Application of :
GELLER, Glen E. et al. :
Application No. 11/409,489 : DECISION ON PETITION
Filed: April 21, 2006 : TO WITHDRAW
Attorney Docket No. **ZTCH 1000-1** : FROM RECORD
:

This is a decision on the Request to Withdraw as attorney or agent of record under 37 C.F.R. § 1.36(b), filed September 04, 2007.

The request is **NOT APPROVED** as moot.

A review of the file record indicates that on September 06, 2007, Haynes Beffel & Wolffeld LLP filed a request to rescind the withdrawal of attorney filed on September 04, 2007. The attorneys/agents of record stated that the request was sent in error. Accordingly, the request to withdraw under 37 C.F.R. § 1.36(b) is moot.

All future communications from the Office will continue to be directed to the above-listed address until otherwise notified by applicant.

Telephone inquires concerning this decision should be directed to the undersigned at 571-272-4231.

Michelle R. Eason
Paralegal Specialist
Office of Petitions

cc: **BIG INVESTORS LLC**
ATTENTION: JAMES HAMMER, MANAGING PARTNER
2990 SOUTH DURANGO DR.
LAS VEGAS, NV 89117

UNITED STATES PATENT AND TRADEMARK OFFICE

Commissioner for Patents
United States Patent and Trademark Office
P.O. Box 1450
Alexandria, VA 22313-1450
www.uspto.gov

MAILED

MAY 19 2010

OFFICE OF PETITIONS

HAYNES BEFFEL & WOLFELD LLP
P O BOX 366
HALF MOON BAY CA 94019

In re Application of	:	
GELLER, Glenn Earle et al.	:	
Application No. 11/409,489	:	DECISION ON PETITION
Filed: April 21, 2006	:	TO WITHDRAW
Attorney Docket No. **ZTCH 1000-1**	:	FROM RECORD
	:	

This is a decision on the Request to Withdraw as attorney or agent of record under 37 C.F.R. § 1.36(b), filed May 03, 2010.

The request is **APPROVED**.

A grantable request to withdraw as attorney/agent of record must be signed by every attorney/agent seeking to withdraw or contain a clear indication that one attorney is signing on behalf of another/others. The Office requires the practitioner(s) requesting withdrawal to certify that he, she, or they have: (1) given reasonable notice to the client, prior to the expiration of the response period, that the practitioner(s) intends to withdraw from employment; (2) delivered to the client or a duly authorized representative of the client all papers and property (including funds) to which the client is entitled; and (3) notified the client of any responses that may be due and the time frame within which the client must respond, pursuant 37 CFR 10.40(c).

The request was signed by Ernest J. Beffel, Jr. on behalf of all attorneys of record who are associated with customer No. 22470. All attorneys/agents associated have been withdrawn. Applicant is reminded that there is no attorney of record at this time.

All future correspondence will be directed to the first named inventor Glenn Geller at the address indicated below.

There are no outstanding Office actions at this time.

Telephone inquiries concerning this decision should be directed to the undersigned at 571-272-4231.

Michelle R. Eason
Paralegal Specialist
Office of Petitions

cc: **GLENN GELLER**
1830 S. ALMA SCHOOL ROAD
SUITE 114
MESA, AZ 85210

UNITED STATES PATENT AND TRADEMARK OFFICE

Commissioner for Patents
United States Patent and Trademark Office
P.O. Box 1450
Alexandria, VA 22313-1450
www.uspto.gov

SMITH FROHWEIN TEMPEL GREENLEE BLAHA, LLC
TWO RAVINIA DRIVE
SUITE 700
ATLANTA GA 30346

COPY MAILED

MAR 2 8 2007

OFFICE OF PETITIONS

In re Application of	:	
Gregory S. Warren et al	:	
Application No. 11/409,493	:	ON PETITION
Filed: April 21, 2006	:	
Attorney Docket No. 09002.1012	:	

This is a decision on the petition under 37 CFR 1.181, filed November 2, 2006, requesting waiver of the extension of time fee submitted with the instant petition.

The petition under 37 CFR 1.181 is **GRANTED**.

The extension of time fee of $795 will be refunded by check in due course.

Telephone inquiries concerning this decision should be directed to the undersigned at (571) 272-3208.

This application is being referred to the Office of Initial Patent Examination.

Karen Creasy

Karen Creasy
Petitions Examiner
Office of Petitions

UNITED STATES PATENT AND TRADEMARK OFFICE

Commissioner for Patents
United States Patent and Trademark Office
P.O. Box 1450
Alexandria, VA 22313-1450
www.uspto.gov

SHELL OIL COMPANY
P O BOX 2463
HOUSTON TX 77252-2463

COPY MAILED

SEP 09 2008

OFFICE OF PETITIONS

In re Application of :
Billy John McKinzie II :
Application No. 11/409,504 : ON PETITION
Filed: April 21, 2006 :
Attorney Docket No. TH3068 (US) :

This is a decision on the petition under 37 CFR 1.137(b), filed July 1, 2008, to revive the above-identified application.

This application became abandoned for failure to timely pay the issue fee and publication fee within three (3) months of the mailing of the Notice of Allowance and Fee(s) Due, mailed March 21, 2008. Accordingly, this application became abandoned on June 22, 2008. A Notice of Abandonment was mailed on July 3, 2008.

Applicant has submitted a proper reply in the form of the issue fee and the publication fee, an acceptable statement of the unintentional nature of the delay in responding to the March 21, 2008 Notice of Allowance and Fee(s) Due, and the petition fee.

The petition is **granted**.

This application is being forwarded to the Office of Data Management for processing into a patent.

Telephone inquiries concerning this matter may be directed to the undersigned at (571) 272-3230.

Shirene Willis Brantley
Senior Petitions Attorney
Office of Petitions

UNITED STATES PATENT AND TRADEMARK OFFICE

Commissioner for Patents
United States Patent and Trademark Office
P.O. Box 1450
Alexandria, VA 22313-1450
www.uspto.gov

JENNIFER L. BALES
MOUNTAIN VIEW PLAZA
1520 EUCLID CIRCLE
LAFAYETTE, CO 80026-1250

COPY MAILED

NOV 30 2007

OFFICE OF PETITIONS

In re Application of

FRANCIS, Melvin
Application No. 11/409,506
Filed: April 21, 2006
Attorney Docket No. **U01.101**

DECISION ON PETITION
TO WITHDRAW
FROM RECORD

This is a decision on the Request to Withdraw as attorney or agent of record under 37 C.F.R. § 1.36(b), filed October 22, 2007.

The request is **APPROVED**.

A grantable request to withdraw as attorney/agent of record must be signed by every attorney/agent seeking to withdraw or contain a clear indication that one attorney is signing on behalf of another/others. A request to withdraw will not be approved unless at least 30 (thirty) days would remain between the date of approval and the later of the expiration date of a time to file a response or the expiration date of the maximum time period which can be extended under 37 C.F.R. § 1.136(a).

The request was signed by Jennifer Bales on behalf of all attorneys of record. All attorneys/agents associated have been withdrawn. Applicant is reminded that there is no attorney of record at this time.

The request to change the correspondence of record is not acceptable as the requested correspondence address is not that of: (1) the first named signing inventor; or (2) an intervening assignee of the entire interest under 37 C.F.R 3.71. All future communications from the Office will be directed to the first named signing inventor.

There are no outstanding office actions at this time.

Telephone inquiries concerning this decision should be directed to the undersigned at 571-272-4231.

Michelle R. Eason
Paralegal Specialist
Office of Petitions

cc: **MELVIN FRANCIS**
7260 ANDREA LANE
MORRISON, COLORADO 80465

cc: **PEARNE & GORDON, LLP**
1801 EAST 9TH STREET
SUITE 1200
CLEVELAND, OHIO 44114-3108

UNITED STATES PATENT AND TRADEMARK OFFICE

COMMISSIONER FOR PATENTS
UNITED STATES PATENT AND TRADEMARK OFFICE
P.O. BOX 1450
ALEXANDRIA, VA 22313-1450
WWW.USPTO.GOV

Paper No. None

WOLF GREENFIELD & SACKS, PC
FEDERAL RESERVE PLAZA
600 ATLANTIC AVENUE
BOSTON MA 02210-2206

COPY MAILED
DEC 14 2006
OFFICE OF PETITIONS

In re Application of	:	
Alexi A. Erchak et al.	:	
Application No. 11/409,510	:	DECISION ON PETITION UNDER
Filing Date: April 21, 2006	:	37 C.F.R. §1.10(c)
Attorney Docket No.	:	
L0655.70026US03	:	
Title: LIGHT EMITTING DEVICES	:	

This is a decision on the petition under 37 C.F.R. §1.10(c), filed August 22, 2006, requesting the according of a filing date of April 21, 2006 to application number 11/409,510.

The application was deposited on April 22, 2006. Shortly thereafter, the Office mailed a filing receipt, indicating that application number 11/409,510 had been accorded a filing date of April 22, 2006.

With the present petition, Petitioner has included a copy of the Express Mail label number EV744770783US[1].

Petitioner has alleged that the application was deposited on April 21, 2006, and the Patent Office has incorrectly assigned a filing date of April 22, 2006 to the present application. Petitioner has included a copy of the Express Mail label, and it is noted that the "date in" field contains the text "4 21 06."

1 The Utility patent Application Transmittal sheet has been located in the electronic file, and it is noted that it contains this same Express Mail label number.

Copied from 11419510 on 12/26/2006

A check of the United States Postal Service's website (http://www.usps.com/shipping/trackandconfirm.htm) indicates that the package was accepted on April 21, 2006. A printout of the same has been enclosed.

Although the application received a filing date of April 22, 2006, the evidence is convincing that the application papers were filed on April 21, 2006, and the Patent Office assigned the incorrect date to the application. Therefore, the application was entitled to a filing date of April 21, 2006.

Accordingly, the petition is **GRANTED**.

The application file is being returned to the Office of Initial Patent Examination for further processing with a filing date of April 21, 2006, as well as the mailing of a corrected filing receipt.

Telephone inquiries regarding this decision should be directed to the undersigned at (571) 272-3225. All other inquiries concerning examination procedures or status of the application should be directed to the Technology Center.

Paul Shanoski
Senior Attorney
Office of Petitions
United States Patent and Trademark Office

Encl. United States Postal Service Tracking Results

Copied from 11419510 on 12/26/2006

Track & Confirm

Search Results

Label/Receipt Number: **EV74 4770 783U S**
Detailed Results:

- **Delivered, April 24, 2006, 7:24 am, ALEXANDRIA, VA 22313**
- **Arrival at Pick-Up-Point, April 22, 2006, 9:00 am, ALEXANDRIA, VA 22313**
- **Arrival at Unit, April 22, 2006, 8:33 am, DULLES, VA 20102**
- **Acceptance, April 21, 2006, 6:10 pm, BOSTON, MA 02205**

< Back

Return to USPS.com Home >

Track & Confirm

Enter Label/Receipt Number.

Notification Options

Proof of Delivery

Verify who signed for your item by email, fax, or mail. Go >

Copyright © 1999-2004 USPS. All Rights Reserved. Terms of Use Privacy Policy

Copied from 11419510 on 12/26/2006

UNITED STATES PATENT AND TRADEMARK OFFICE

Commissioner for Patents
United States Patent and Trademark Office
P.O. Box 1450
Alexandria, VA 22313-1450
www.uspto.gov

AUSTIN RAPP & HARDMAN
170 South Main Street, Suite 735
SALT LAKE CITY UT 84101

MAILED

MAY 26 2009

OFFICE OF PETITIONS

In re Application of:
LESLIE, et al.
Application No. 11/409,541
Filed: April 21, 2006
Attorney Docket No. **2001.2.6**

ON PETITION

This is a decision on the petition under 37 CFR 1.137(b), filed May 12, 2009, to revive the above-identified application and the petition under 37 CFR 1.182, filed May 19, 2009, to expedite processing of the petition to revive.

The petition to revive is **GRANTED**.

The petition to expedite is **GRANTED**.

The application became abandoned for failure to pay the issue and publication fees on or before May 11, 2009, as required by the Notice of Allowance and Fee(s) Due, mailed February 11, 2009, which set a statutory period for reply of three (3) months. Accordingly, the application became abandoned on May 12, 2009.

The petition to revive satisfies the requirements of 37 CFR 1.137(b) in that the petitioner has supplied (1) the reply in the form of payment of the issue fee of $755.00 and (2) the petition fee of $810.00; and (3) a proper statement of unintentional delay. The requisite $400.00 fee for the petition to expedite processing under 37 CFR 1.182 has also been submitted.

Telephone inquiries concerning this decision should be directed to Brian W. Brown at (571) 272-5338.

This application is being referred to the Publishing Division for processing into a patent.

Brian W. Brown
Petitions Examiner
Office of Petitions

UNITED STATES PATENT AND TRADEMARK OFFICE

COMMISSIONER FOR PATENTS
UNITED STATES PATENT AND TRADEMARK OFFICE
P.O. BOX 1450
ALEXANDRIA, VA 22313-1450
www.uspto.gov

Paper No.

MCDERMOTT WILL & EMERY LLP
600 13TH STREET, N.W.
WASHINGTON DC 20005-3096

COPY MAILED

MAY 09 2008

In re	:	
Joey Esteves	:	
and Randy Flatness	:	DECISION ACCORDING STATUS
Reissue Application No. 11/409,549	:	UNDER 37 CFR 1.47(a)
Filed: April 20, 2006	:	
Attorney Docket No. 070386-0467	:	

This is in response to the "PETITION FOR FILING WHEN AN INVENTOR CANNOT BE REACHED PURSUANT TO 37 C.F.R. § 1.47(a)," filed October 4, 2006. This petition was filed by the assignee. A proper 3.73(b) statement authorizing assignee to take action in this application was also filed on October 4, 2006. This petition was recently forwarded to the undersigned for consideration.

The petition is **GRANTED**.

The above-identified reissue application of patent No. 6,724,174 (Issued April 20, 2004) was filed on April 20, 2006, without an executed reissue oath or declaration. Accordingly, on May 4, 2006, the Office mailed a Notice to File Missing Parts of Reissue Application, requiring the filing of an executed oath or declaration in compliance with 37 CFR 1.63 and the surcharge for its late filing. (In addition, the Notice required payment of the statutory basic filing fee, a written consent of assignee, and a statement under 37 CFR 3.73(b).

In response, on October 4, 2006, the instant petition was filed, requesting acceptance of a reissue declaration without the signature of inventor Joey Esteves. (In addition, applicant

submitted the missing filing fees, a written consent of assignee and a statement under 37 CFR 3.73(b)). This response was made timely by an accompanying petition and fee for extension of time for response within the third month.

37 CFR § 1.172 requires that a reissue declaration be made by the inventors, except as otherwise provided (§§ 1.42, 1.43, 1.47), where the scope of the claims of the original patent is being enlarged.

In addition to other requirements of law (35 U.S.C. 111(a) and 115), an application deposited in the U.S. Patent and Trademark Office pursuant to 37 CFR 1.47(a) must meet the following requirements:

(A) All the available joint inventors must

(1) make oath or declaration on their own behalf as required by 37 CFR 1.63 or 1.175[1] (see MPEP § 602, § 605.01, and § 1414) and

(2) make oath or declaration on behalf of the nonsigning joint inventor as required by 37 CFR 1.64. An oath or declaration signed by all the available joint inventors with the signature block of the nonsigning inventor(s) left blank may be treated as having been signed by all the available joint inventors on behalf of the nonsigning inventor(s), unless otherwise indicated.

(B) The application must be accompanied by proof that the nonsigning inventor
(1) cannot be found or reached after diligent effort
(2) refuses to execute the application papers. See MPEP § 409.03(d).

(C) The last known address of the nonsigning joint inventor must be stated. See MPEP § 409.03(e).

The instant petition meets the requirements of § 1.47(a). All joint inventor Flatness has executed the reissue declaration on

[1] However, the question of the sufficiency of the reissue oath/declaration filed under 37 CFR 1.175 must in each case be reviewed and decided personally by the primary examiner.

behalf of inventor Esteves. The petition includes adequate proof that inventor Esteves has refused to join in the reissue application as shown by his conduct in not responding after having been presented the application papers by Federal Express. The evidence submitted includes inventor Esteves's signature on a Federal Express delivery receipt for a August 16, 2006 shipment containing all of the application papers. The petition includes payment of the petition fee and the last known address of the non-signing inventor. The declaration filed October 4, 2006 has been reviewed and found in compliance with § 1.47.

In view thereof, this application is hereby accorded Rule 1.47(a) status.

As provided in Rule 1.47(c), this Office will forward notice of this application's filing to the non-signing inventor at the address given in the petition. Notice of the filing of this application will also be published in the Official Gazette.

Telephone inquiries regarding this decision should be directed to the undersigned at (571) 272-3219.

Nancy Johnson
Senior Petitions Attorney
Office of Petitions

UNITED STATES PATENT AND TRADEMARK OFFICE

COMMISSIONER FOR PATENTS
UNITED STATES PATENT AND TRADEMARK OFFICE
P.O. BOX 1450
ALEXANDRIA, VA 22313-1450
www.uspto.gov

MR. JOEY ESTEVES
2160 Frank Blondin Lane
Tracy, CA 95377

COPY MAILED

MAY 09 2008

In re	:	
Joey Esteves	:	
and Randy Flatness	:	
Reissue Application No. 11/409,549	:	LETTER
Filed: April 20, 2006	:	
Attorney Docket No. 070386-0467	:	

Dear Mr. Esteves:

You are named as a joint inventor in the above-identified United States patent reissue application filed under the provisions of 35 U.S.C. 116 (United States Code) and 37 CFR 1.47(a), Rules of Practice in Patent Cases. Should a patent be granted on the application you will be designated therein as a joint inventor.

As a named inventor you are entitled to inspect any paper in the file wrapper of the application, order copies of all or any part thereof (at a prepaid cost per 37 CFR 1.19) or make your position of record in the application. Alternatively, you may arrange to do any of the preceding through a registered patent attorney or agent presenting written authorization from you. If you care to join the application, counsel of record (see below) would presumably assist you. Joining in the application would entail the filing of an appropriate oath or declaration by you pursuant to 37 CFR 1.63. However, no action on your part is required for this patent to issue with you as a named inventor.

Telephone inquiries regarding this communication should be directed to Petitions Attorney Nancy Johnson at (571) 272-3219. Requests for information regarding your application should be directed to the File Information Unit at (703) 308-2733. Information regarding how to pay for and order a copy of the application, or a specific paper in the application, should be

directed to the Certification Division at (571) 272-3150 or 1-800-972-6382 (outside the Washington D.C. area).

Nancy Johnson
Senior Petitions Attorney
Office of Petitions

MCDERMOTT WILL & EMERY LLP
600 13TH STREET, N.W.
WASHINGTON DC 20005-3096

UNITED STATES PATENT AND TRADEMARK OFFICE

UNITED STATES DEPARTMENT OF COMMERCE
United States Patent and Trademark Office
Address: COMMISSIONER FOR PATENTS
P.O. Box 1450
Alexandria, Virginia 22313-1450
www.uspto.gov

MCDERMOTT WILL & EMERY LLP
600 13TH STREET, N.W.
WASHINGTON, DC 20005-3096

Mail Date: 06/14/2010

Applicant	: Joey Martin Esteves	: DECISION ON REQUEST FOR
Patent Number	: RE41037	: RECALCULATION of PATENT
Issue Date	: 12/15/2009	: TERM ADJUSTMENT IN VIEW
Application No	: 11/409,549	: OF WYETH
Filed	: 04/20/2006	:
		:

The Patentee's Request for Recalculation is **DISMISSED.**

This Request is deemed ineligible for consideration for one or more of the following reasons:

(A). The patent for which PTA recalculation is requested is either a design or reissue application or is a reexamination proceeding;

(B). The patent for which PTA recalculation is requested resulted from a utility or plant application filed under 35 USC 111(a) before May 29, 2000 and no CPA filed in the application on/after May 29, 2000;

(C). The patent for which PTA recalculation is requested resulted from an international application in which the international filing date was before May 29, 2000 and no CPA filed in the application on/after May 29, 2000;

(D). The patent for which PTA recalculation is requested issued on/after March 2, 2010;

(E). The Request for Recalculation was filed more than 180 days after the grant date of the patent and the request was not filed within two months of a dismissal of a request for reconsideration of the of the patent term under 37 CFR 1.705(d);

(F). The Request for Recalculation is not solely limited to USPTO pre-Wyeth interpretation of 35 U.S.C. 154(b)(2)(A);

or

(G). A civil action was filed pursuant to 35 U.S.C. 154(b)(4)(A)concerning the same patent at issue in this request.

Patentee may file a reply to this decision dismissing the Request for Recalculation. Patentee must file such reply within one month or thirty days, whichever is longer, of the mail date of the decision dismissing the Request for Recalculation. No fee is required if patentee is asserting in the reply that the dismissal for ineligibility is improper.

Patentee should use document code PET.OP if electronically filing a reply to this dismissal. If the USPTO finds that the request was improperly deemed ineligible, the USPTO will mail applicant a recalculation determination.

Patentee should be aware that in order to preserve the right to review in the United States District Court for the District of Columbia of the USPTO patent term adjustment determination, patentee must ensure that he or she also take the steps required under 35 U.S.C. 154(b)(4)(A). Nothing in the request for recalculation should be construed as providing an alternative time frame for commencing a civil action under 35 U.S.C. 154 (b)(4)(A).

Any questions concerning this decision should be directed to the Office of Patent Legal Administration at 571-272-7702.

UNITED STATES PATENT AND TRADEMARK OFFICE

Commissioner for Patents
United States Patent and Trademark Office
P.O. Box 1450
Alexandria, VA 22313-1450
www.uspto.gov

CARR & FERRELL LLP
2200 GENG ROAD
PALO ALTO CA 94303

COPY MAILED

DEC 23 2009

OFFICE OF PETITIONS

In re Application of :
Iggoni Sunga Fajardo :
Application No. 11/409,581 : DECISION GRANTING PETITION
Filed: April 24, 2006 : UNDER 37 CFR 1.313(c)(2)
Attorney Docket No. PA5042US :

This is a decision on the petition under 37 CFR 1.313(c)(2), filed December 15, 2009, to withdraw the above-identified application from issue after payment of the issue fee.

The petition is **GRANTED**.

The above-identified application is withdrawn from issue for consideration of a submission under 37 CFR 1.114 (request for continued examination). *See* 37 CFR 1.313(c)(2).

Petitioner is advised that the issue fee paid on October 21, 2009 cannot be refunded. If, however, this application is again allowed, petitioner may request that it be applied towards the issue fee required by the new Notice of Allowance.[1]

Telephone inquiries should be directed to the undersigned at (571) 272-3208.

This application is being referred to Technology Center AU 3726 for processing of the request for continued examination under 37 CFR 1.114 and for consideration of the concurrently filed IDS, via a decision by the Office of Petitions on the petition filed December 15, 2009, under 37 CFR 1.137(f).

/Karen Creasy/
Karen Creasy
Petitions Examiner
Office of Petitions

[1] *The request to apply the issue fee to the new Notice may be satisfied by completing and returning the new Part B – Fee(s) Transmittal Form (along with any balance due at the time of submission). Petitioner is advised that the Issue Fee Transmittal Form must be completed and timely submitted to avoid abandonment of the application.*

UNITED STATES PATENT AND TRADEMARK OFFICE

Commissioner for Patents
United States Patent and Trademark Office
P.O. Box 1450
Alexandria, VA 22313-1450
www.uspto.gov

COPY MAILED

DEC 23 2009

OFFICE OF PETITIONS

CARR & FERRELL LLP
2200 GENG ROAD
PALO ALTO CA 94393

In re Application of :
Iggoni Sunga Fajardo :
Application No. 11/409,581 : DECISION ON PETITION
Filed: April 24, 2006 : UNDER 37 CFR 1.137(b)
Attorney Docket No. PA5042US :

This is a decision on the petition, filed December 15, 2009, which is being treated as a petition under 37 CFR 1.137(b) to revive the instant nonprovisional application for failure to timely notify the U.S. Patent and Trademark (USPTO) of the filing of an application in a foreign country, or under a multinational treaty that requires publication of applications eighteen months after filing. *See* 37 CFR 1.137(f).

The petition is **GRANTED**.

Petitioner states that the instant nonprovisional application is the subject of an application filed in an eighteen-month publication country on October 14, 2007. However, the USPTO was unintentionally not notified of this filing within 45 days subsequent to the filing of the subject application in an eighteen-month publication country.

In view of the above, this application became abandoned pursuant to 35 U.S.C. § 122(b)(2)(B)(iii) and 37 CFR 1.213(c) for failure to timely notify the Office of the filing of an application in a foreign country or under a multilateral international agreement that requires publication of applications 18 months after filing.

A petition to revive an application abandoned pursuant to 35 U.S.C. 122(b)(2)(B)(iii) for failure to notify the USPTO of a foreign filing must be accompanied by:

(1) the required reply which is met by the notification of such filing in a foreign country or under a multinational treaty;
(2) the petition fee as set forth in 37 CFR 1.17(m); and
(3) a statement that the entire delay in filing the required reply from the due date of the reply until the filing of a grantable petition was unintentional.

The instant petition has been found to be in compliance with 37 CFR 1.137(b). Accordingly, the failure to timely notify the USPTO of a foreign or international filing within 45 days after the date of filing of such foreign or international application as provided by 35 U.S.C. § 122(b)(2)(B)(iii) and 37 CFR 1.213(c) is accepted as having been unintentionally delayed.

The previous Request and Certification under 35 U.S.C. § 122(b)(2)(B)(i) has been rescinded. A Notice Regarding Rescission of Nonpublication Request which sets forth the projected publication date of April 1, 2010 accompanies this decision on petition.

Telephone inquiries concerning this decision should be directed to the undersigned at (571) 272-3208.

This application is being referred to Technology Center Art Unit 3726 for processing of the request for continued examination under 37 CFR 1.114 and for consideration of the concurrently filed IDS..

/KOC/
Karen Creasy
Petitions Examiner
Office of Petitions

ATTACHMENT: Notice Regarding Rescission of Nonpublication Request

RAM Fee History Query

Revenue Accounting and Management

Name/Number: 11409581 Total Records Found: 9

Start Date: Any Date End Date: Any Date

Accounting Date	Sequence Num.	Fee Type	Fee Code	Fee Amount	Mailroom Date	Payment Method
12/23/2009	00000004	1	1464	$130.00	12/15/2009	DA 060600
12/16/2009	00000068	1	1806	$180.00	12/15/2009	DA 060600
12/16/2009	00000067	1	2453	$810.00	12/15/2009	DA 060600
12/16/2009	00000066	1	2801	$405.00	12/15/2009	DA 060600
10/22/2009	00002610	4	2501	$755.00	10/21/2009	DA 060600
04/28/2006	00000153	1	8021	$40.00	04/24/2006	DA 111245
04/26/2006	00000027	1	2111	$250.00	04/24/2006	DA 111245
04/26/2006	00000026	1	2011	$150.00	04/24/2006	DA 111245
04/26/2006	00000028	1	2311	$100.00	04/24/2006	DA 111245

12/23/2009 LDIEP1 00000002 060600 11409581
Sale Ref: 00000002 DA#: 060600 11409581
01 FC:1464 130.00 DA

UNITED STATES PATENT AND TRADEMARK OFFICE

Commissioner for Patents
United States Patent and Trademark Office
P.O. Box 1450
Alexandria, VA 22313-1450
www.uspto.gov

PENG CHEN
MORRISON & FOERSTER LLP
12531 HIGH BLUFF DRIVE
SUITE100
SAN DIEGO, CA 92130

COPY MAILED

MAR 20 2008

In re Application of	:	
Doron LANCET, et al	:	
Application No. 11/409,590	:	DECISION ON PETITION
Filed: April 24, 2006	:	TO WITHDRAW
Attorney Docket No. 20065870-0069	:	FROM RECORD
	:	

This is a decision on the Request to Withdraw as attorney or agent under 37 C.F.R. § 1.36(b) or 37 C.F.R. § 10.40 filed December 19, 2007.

The request is **APPROVED**.

A review of the file record indicates that Peng Chen (1) does not have power of attorney in this patent application; and (2) has been employed or otherwise engaged in the proceedings in this patent application. In view of the present decision, Peng Chen has been withdrawn from the present application and may not prepare or submit papers under 37 C.F.R. § 1.34, or correspond in any manner in this application unless appointed in an acceptable power of attorney under 37 C.F.R. § 1.32(b).

The request to change the correspondence of record is not acceptable as the requested correspondence address is not that of: (1) the first named signing inventor; or (2) an intervening assignee of the entire interest under 37 C.F.R 3.71. All future communications from the Office will be directed to the first named signing inventor at the first copied address below until otherwise properly notified by the applicant.

In order to request or take action in a patent matter, the assignee must establish its ownership of the patent to the satisfaction of the Director. In this regard, a Statement under 37 CFR 3.73(b) must have either: (i) documentary evidence of a chain of title from the original owner to the assignee (*e.g.,* copy of an executed assignment), and a statement affirming that the documentary evidence of the chain of title from the original owner to the assignee was or concurrently is being submitted for recordation pursuant to § 3.11; or (ii) a statement specifying where documentary evidence of a chain of title from the original owner to the assignee is recorded in the assignment records of the Office (*e.g.*, reel and frame number).

There are no outstanding Office actions pending at the present time.

Telephone inquires concerning this decision should be directed to the undersigned at 571-272-6735.

Diane Goodwyn
Petitions Examiner
Office of Petitions

cc: DORON LANCET
4A MELCHETT STREET,
TEL AVIV 69391
ISRAEL

COOPER AND DUNHAM
1185 AVENUE OF THE AMERICAS
NEW YORK, NY 10036

UNITED STATES PATENT AND TRADEMARK OFFICE

UNITED STATES DEPARTMENT OF COMMERCE
United States Patent and Trademark Office
Address: COMMISSIONER FOR PATENTS
P.O. Box 1450
Alexandria, Virginia 22313-1450
www.uspto.gov

APPLICATION NUMBER	FILING OR 371(C) DATE	FIRST NAMED APPLICANT	ATTY. DOCKET NO./TITLE
11/409,590	04/24/2006	Doron Lancet	20065870-0069

CONFIRMATION NO. 3019

29932
PAULA EVANS/
C/O SONNENSCHEIN NATH & ROSENTHAL LLP
P.O. BOX 061080
WACKER DRIVE STATION, SEARS TOWER
CHICAGO, IL 60606-1080

POWER OF ATTORNEY NOTICE

OC000000028964038

Date Mailed: 03/20/2008

NOTICE REGARDING CHANGE OF POWER OF ATTORNEY

This is in response to the Power of Attorney filed 12/19/2007.

- The withdrawal as attorney in this application has been accepted. Future correspondence will be mailed to the new address of record. 37 CFR 1.33.

/dcgoodwyn/

Office of Initial Patent Examination (571) 272-4000 or 1-800-PTO-9199

UNITED STATES PATENT AND TRADEMARK OFFICE

Commissioner for Patents
United States Patent and Trademark Office
P.O. Box 1450
Alexandria, VA 22313-1450
www.uspto.gov

MARVIN D. COOPER
7315 AUTUMNGROVE DR.
HOUSTON TX 77072-2211

COPY MAILED

DEC 0 7 2009

OFFICE OF PETITIONS

In re Application of	:	
Marvin Octavious COOPER	:	
Application No. 11/409,593	:	DECISION ON PETITION
Filed: April 24, 2006	:	
Attorney Docket No. PRO SE	:	

This is a decision on the petition, filed June 12, 2009, which is being treated as a petition under 37 CFR 1.181 (no fee), requesting withdrawal of the holding of abandonment in the above-identified application.

The petition is **DISMISSED**.

Any request for reconsideration of this decision should be filed within two (2) months from the mail date of this decision. *Note* 37 CFR 1.181(f). The request for reconsideration should include a cover letter and be entitled as a "Renewed Petition under 37 CFR 1.181 to Withdraw the Holding of Abandonment."

This application was held abandoned for failure to reply to the non-final Office action mailed September 02, 2008, which set a two (2) month shortened statutory period for reply. A Notice of Abandonment was mailed on May 27, 2009.

The petition is not signed by all inventors. Mrs. Eveth E. Cooper, must show that she is the administrator of the estate of Mr. Marvin O. Cooper.

The statement of delay is not acceptable. In this regard, petitioner's attention is directed to 37 CFR 1.33(b), which states.

> (b) Amendments and other papers. Amendments and other papers, except for written assertions pursuant to § 1.27(c)(2)(ii) of this part, filed in the application must be signed by:
> (1) A registered patent attorney or patent agent of record appointed in compliance with § 1.32(b);
> (2) A registered patent attorney or patent agent not of record who acts in a representative capacity under the provisions of § 1.34;

(3) An assignee as provided for under §3.71(b) of this chapter; or

(4) All of the applicants (§ 1.41(b)) for patent, unless there is an assignee of the entire interest and such assignee has taken action in the application in accordance with § 3.71 of this chapter.

An unsigned amendment (or other paper) or one not properly signed by a person having authority to prosecute the application is not entered. This applies, for instance, where the amendment (or other paper) is signed by only one of two applicants and the one signing has not been given a power of attorney by the other applicant.

Therefore, as the petition is not signed by all the inventors and the record herein fails to disclose that petitioner herein (Don Shelton) was ever given a power of attorney to act on behalf of inventor Eveth E. Cooper, or that he is an assignee of the entire interest and has complied with the provisions of 37 CFR 3.73(b), the petition is considered to not contain a proper statement of unintentional delay.

Further correspondence with respect to this matter should be addressed as follows:

By Mail: Mail Stop PETITION
Commissioner for Patents
P. O. Box 1450
Alexandria, VA 22313-1450

By hand: U. S. Patent and Trademark Office
Customer Service Window, Mail Stop Petitions
Randolph Building
401 Dulany Street
Alexandria, VA 22314

By facsimile: **(571) 273-8300**
Attn: Office of Petitions

Telephone inquiries concerning this decision should be directed to Michelle R. Eason at (571) 272-4231.

Thurman Page
Petitions Examiner
Office of Petitions

UNITED STATES PATENT AND TRADEMARK OFFICE

Commissioner for Patents
United States Patent and Trademark Office
P.O. Box 1450
Alexandria, VA 22313-1450
www.uspto.gov

MARVIN D. COOPER
7315 AUTUMNGROVE DR.
HOUSTON TX 77072-2211

COPY MAILED

DEC 07 2009

OFFICE OF PETITIONS

In re Application of	:	
Marvin Octavious COOPER et al.	:	
Application No. 11/409,593	:	DECISION ON PETITION
Filed: April 24, 2006	:	TO MAKE SPECIAL UNDER
Attorney Docket No. **PRO SE**	:	37 CFR 1.102(c)(1)
	:	

This is a decision on the petition under 37 CFR 1.102(c)(1), filed July 13, 2009, to make the above-identified application special based on applicant's age as set forth in M.P.E.P. § 708.02, Section IV.

The petition is **GRANTED**.

A grantable petition to make an application special under 37 CFR 1.102(c)(1) and MPEP § 708.02, Section IV: Applicant's Age must be accompanied by evidence showing that at least one of the applicants is 65 years of age, or more, such as a birth certificate or a statement by applicant. No fee is required

The instant petition includes a copy of the inventor's birth certificate as evidence that Don Arland Shelton is over 65 years of age. Accordingly, the above-identified application has been accorded "special" status.

Telephone inquiries concerning this decision should be directed to Michelle R. Eason at 571-272-4231.

All other inquiries concerning either the examination or status of the application should be directed to the Technology Center.

The application is being forwarded to the Technology Center Art Unit 3635 for action on the merits commensurate with this decision.

Michelle R. Eason
Paralegal Specialist
Office of Petitions

UNITED STATES PATENT AND TRADEMARK OFFICE

Commissioner for Patents
United States Patent and Trademark Office
P.O. Box 1450
Alexandria, VA 22313-1450
www.uspto.gov

MARVIN D. COOPER
7315 AUTUMNGROVE DR.
HOUSTON TX 77072-2211

MAILED

JUN 0 7 2010

OFFICE OF PETITIONS

In re Application of	:	
Marvin Octavious COOPER	:	
Application No. 11/409,593	:	DECISION ON PETITION
Filed: April 24, 2006	:	
Attorney Docket No. PRO SE	:	

This is a decision on the renewed petition, filed February 03, 2010, which is being treated as a petition under 37 CFR 1.8(b) (no fee), requesting withdrawal of the holding of abandonment in the above-identified application.

The petition is **GRANTED**.

This application was held abandoned for failure to reply to the Office action mailed September 02, 2008, which set a two (2) month shortened statutory period for reply. A Notice of Abandonment was mailed on May 27, 2009.

Petitioner states that a timely reply was mailed on October 01, 2008. Petitioner has submitted a copy of a return postcard which acknowledges receipt by the U.S. Patent and Trademark Office (USPTO) on October 1, 2008, which would have rendered the reply timely.

The file record does not include the originally submitted papers. Failure to receive correspondence which includes a certificate of mailing or certificate of facsimile transmission is addressed in 37 CFR 1.8(b), reproduced below:

> In the event that correspondence is considered timely filed by being mailed or transmitted in accordance with paragraph (a) of this section, but not received in the U.S. Patent and Trademark Office after a reasonable amount of time has elapsed from the time of mailing or transmitting of the correspondence, or after the application is held to be abandoned, or after the proceeding is dismissed, terminated, or decided with prejudice, the correspondence will be considered timely if the party who forwarded such correspondence:

(1) Informs the Office of the previous mailing or transmission of the correspondence promptly after becoming aware that the Office has no evidence of receipt of the correspondence;

(2) Supplies an additional copy of the previously mailed or transmitted correspondence and certificate; and

(3) Includes a statement which attests on a personal knowledge basis or to the satisfaction of the Director to the previous timely mailing or transmission. If the correspondence was sent by facsimile transmission, a copy of the sending unit's report confirming transmission may be used to support this statement.

The petition satisfies the above requirements of 37 CFR 1.8(b). Accordingly, the holding of abandonment for failure to timely file a reply to the Office action of September 02, 2008 is hereby withdrawn and the application restored to pending status.

The copy of the reply received with the first petition filed June 12, 2009 will be accepted in place of the reply shown to have been mailed on September 02, 2008.

Telephone inquiries concerning this decision should be directed to Michelle R. Eason at (571) 272-4231.

This application is being referred to Technology Center AU 3635 for appropriate action in the normal course of business on the reply received with petition.

/Thurman K. Page/

Thurman K. Page
Petitions Examiner
Office of Petitions

UNITED STATES PATENT AND TRADEMARK OFFICE

Commissioner for Patents
United States Patent and Trademark Office
P.O. Box 1450
Alexandria, VA 22313-1450
www.uspto.gov

TYCO HEALTHCARE GROUP LP
60 MIDDLETOWN AVENUE
NORTH HAVEN CT 06473

COPY MAILED

SEP 14 2009

OFFICE OF PETITIONS

In re Application of	:	
Wham, et al.	:	
Application No. 11/409,602	:	DECISION ON PETITION
Filed: April 24, 2006	:	UNDER 37 CFR 1.78(a)(3)
Attorney Docket No. H-US-00632	:	

This is a decision on the petition under 37 CFR 1.78(a), filed July 16, 2009, which is being treated as a petition under 37 CFR 1.78(a)(3) to accept an unintentionally delayed claim under 35 U.S.C. § 120 for the benefit of priority to the prior-filed nonprovisional applications set forth in the amendment filed with the petition.

The petition is **DISMISSED**.

A petition for acceptance of a claim for late priority under 37 CFR 1.78(a)(3) is only applicable to those applications filed on or after November 29, 2000. Further, the petition is appropriate only after the expiration of the period specified in 37 CFR 1.78(a)(2)(ii). In addition, the petition under 37 CFR 1.78(a)(3) must be accompanied by:

(1) the reference required by 35 U.S.C. § 120 and 37 CFR 1.78(a)(2)(i) of the prior-filed application, unless previously submitted;
(2) the surcharge set forth in § 1.17(t); and
(3) a statement that the entire delay between the date the claim was due under 37 CFR 1.78(a)(2)(ii) and the date the claim was filed was unintentional. The Director may require additional information where there is a question whether the delay was unintentional.

The petition does not satisfy items (1) and (3) above.

The reference to add the above-noted, prior-filed applications in the first sentence of the specification on page one following the title is not acceptable as drafted since it improperly incorporates by reference the prior-filed applications. An incorporation by reference statement added after an application's filing date is not effective because no new matter can be added to an application after its filing date (see 35

U.S.C. § 132(a)). If an incorporation by reference statement is included in an amendment to the specification to add a benefit claim under 35 U.S.C. § 120 after the filing date of the application, the amendment would not be proper. When a benefit claim under 35 U.S.C. § 120 is submitted after the filing of an application, the reference to the prior application cannot include an incorporation by reference statement of the prior application. See Dart Industries v. Banner, 636 F.2d 684, 207 USPQ 273 (C.A.D.C. 1980). Note MPEP §§ 201.06(c) and 608.04(b).

Furthermore, the petition does not include the required statement of unintentional delay as set forth under 37 CFR 1.78(a)(2)(ii).

If reconsideration of this decision is desired, a renewed petition under 37 CFR § 1.78(a)(3) and an Application Data Sheet or an amendment (complying with the provisions of 37 CFR 1.121 and 37 CFR 1.76(b)(5)) to correct the above matters are required. No additional petition fee is due on renewed petition.

The petition fee of $1410 has been charged to Deposit Account No. 21-0550, as authorized.

Further correspondence with respect to this matter should be addressed as follows:

By mail:
Mail Stop PETITIONS
Commissioner for Patents
Post Office Box 1450
Alexandria, VA 22313-1450

By hand:
Customer Service Window
Mail Stop Petitions
Randolph Building
401 Dulany Street
Alexandria, VA 22314

By fax:
(571) 273-8300
ATTN: Office of Petitions

Any questions concerning this matter may be directed to Petitions Attorney Cliff Congo at (571) 272-3207.

Anthony Knight
Supervisor
Office of Petitions

UNITED STATES PATENT AND TRADEMARK OFFICE

Commissioner for Patents
United States Patent and Trademark Office
P.O. Box 1450
Alexandria, VA 22313-1450
www.uspto.gov

TYCO HEALTHCARE GROUP LP
60 MIDDLETOWN AVENUE
NORTH HAVEN CT 06473

MAILED

NOV 06 2009

OFFICE OF PETITIONS

In re Application of	:	
Wham, et al.	:	
Application No. 11/409,602	:	DECISION ON PETITION
Filed: April 24, 2006	:	UNDER 37 CFR 1.78(a)(3)
Attorney Docket No. H-US-00632	:	

This is a decision on the renewed petition under 37 CFR 1.78(a)(3), filed October 14, 2009, to accept an unintentionally delayed claim under 35 U.S.C. § 120 for the benefit of priority to the prior-filed nonprovisional applications set forth in the amendment filed with the petition.

The petition is **GRANTED**.

A petition for acceptance of a claim for late priority under 37 CFR 1.78(a)(3) is only applicable to those applications filed on or after November 29, 2000. Further, the petition is appropriate only after the expiration of the period specified in 37 CFR 1.78(a)(2)(ii). In addition, the petition under 37 CFR 1.78(a)(3) must be accompanied by:

(1) the reference required by 35 U.S.C. § 120 and 37 CFR 1.78(a)(2)(i) of the prior-filed application, unless previously submitted;
(2) the surcharge set forth in § 1.17(t); and
(3) a statement that the entire delay between the date the claim was due under 37 CFR 1.78(a)(2)(ii) and the date the claim was filed was unintentional. The Director may require additional information where there is a question whether the delay was unintentional.

Applicants filed a petition under 37 CFR 1.78(a)(3) on July 16, 2009. However, the petition was dismissed in a decision mailed on September 14, 2009. The petition was dismissed because the amendment submitted with the petition improperly incorporated by reference the prior applications. In addition, the petition did not included the required statement of unintentional delay.

With the instant renewed petition, petitioner has made the proper statement of unintentional delay, and submitted an amendment removing the incorporation by reference statement to the prior filed applications.

All of the above requirements having been satisfied, the late claim for priority under 35 U.S.C. § 120 is accepted as being unintentionally delayed.

The granting of the petition to accept the delayed benefit claim to the prior-filed application under 37 CFR 1.78(a)(3) should not be construed as meaning that this application is entitled to the benefit of the prior-filed application. In order for this application to be entitled to the benefit of the prior-filed application, all other requirements under 35 U.S.C. § 120 and 37 CFR 1.78(a)(1) and (a)(2) must be met. Similarly, the fact that the corrected Filing Receipt accompanying this decision on petition includes the prior-filed application should not be construed as meaning that applicant is entitled to the claim for benefit of priority to the prior-filed application noted thereon. Accordingly, the examiner will, in due course, consider this benefit claim and determine whether the application is entitled to the benefit of the earlier filing date.

A corrected Filing Receipt, which includes the priority claim to the prior-filed nonprovisional application, accompanies this decision on petition.

Any inquiries concerning this decision may be directed to Petitions Attorney Cliff Congo at (571) 272-3207. All other inquiries concerning either the examination procedures or status of the application should be directed to the Technology Center.

The application is being forwarded to Group Art Unit 3739 for examination.

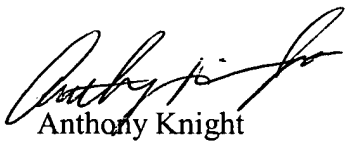

Anthony Knight
Supervisor
Office of Petitions

Enc: corrected Filing Receipt (3 pages)

UNITED STATES PATENT AND TRADEMARK OFFICE

UNITED STATES DEPARTMENT OF COMMERCE
United States Patent and Trademark Office
Address: COMMISSIONER FOR PATENTS
P.O. Box 1450
Alexandria, Virginia 22313-1450
www.uspto.gov

APPLICATION NUMBER	FILING or 371(c) DATE	GRP ART UNIT	FIL FEE REC'D	ATTY.DOCKET.NO	TOT CLAIMS	IND CLAIMS
11/409,602	04/24/2006	3739	1130	H-US-00632 (203-5048)	18	3

CONFIRMATION NO. 2779

90039
TYCO Healthcare Group LP
60 Middletown Avenue
North Haven, CT 06473

CORRECTED FILING RECEIPT

Date Mailed: 10/30/2009

Receipt is acknowledged of this non-provisional patent application. The application will be taken up for examination in due course. Applicant will be notified as to the results of the examination. Any correspondence concerning the application must include the following identification information: the U.S. APPLICATION NUMBER, FILING DATE, NAME OF APPLICANT, and TITLE OF INVENTION. Fees transmitted by check or draft are subject to collection. Please verify the accuracy of the data presented on this receipt. **If an error is noted on this Filing Receipt, please submit a written request for a Filing Receipt Correction. Please provide a copy of this Filing Receipt with the changes noted thereon. If you received a "Notice to File Missing Parts" for this application, please submit any corrections to this Filing Receipt with your reply to the Notice. When the USPTO processes the reply to the Notice, the USPTO will generate another Filing Receipt incorporating the requested corrections**

Applicant(s)

Robert H. Wham, Boulder, CO;
Craig Weinberg, Denver, CO;

Power of Attorney: The patent practitioners associated with Customer Number 50855

Domestic Priority data as claimed by applicant

This appln claims benefit of 60/761,443 01/24/2006
and is a CIP of 10/427,832 05/01/2003 PAT 7,137,980
which is a CIP of 10/073,761 02/11/2002 PAT 6,796,981
which is a CIP of 09/408,944 09/30/1999 PAT 6,398,779
which claims benefit of 60/105,417 10/23/1998

Foreign Applications

If Required, Foreign Filing License Granted: 05/17/2006

The country code and number of your priority application, to be used for filing abroad under the Paris Convention, is **US 11/409,602**

Projected Publication Date: Not Applicable

Non-Publication Request: No

Early Publication Request: No

Title

System and method for terminating treatment in impedance feedback algorithm

Preliminary Class

606

PROTECTING YOUR INVENTION OUTSIDE THE UNITED STATES

Since the rights granted by a U.S. patent extend only throughout the territory of the United States and have no effect in a foreign country, an inventor who wishes patent protection in another country must apply for a patent in a specific country or in regional patent offices. Applicants may wish to consider the filing of an international application under the Patent Cooperation Treaty (PCT). An international (PCT) application generally has the same effect as a regular national patent application in each PCT-member country. The PCT process **simplifies** the filing of patent applications on the same invention in member countries, but **does not result** in a grant of "an international patent" and does not eliminate the need of applicants to file additional documents and fees in countries where patent protection is desired.

Almost every country has its own patent law, and a person desiring a patent in a particular country must make an application for patent in that country in accordance with its particular laws. Since the laws of many countries differ in various respects from the patent law of the United States, applicants are advised to seek guidance from specific foreign countries to ensure that patent rights are not lost prematurely.

Applicants also are advised that in the case of inventions made in the United States, the Director of the USPTO must issue a license before applicants can apply for a patent in a foreign country. The filing of a U.S. patent application serves as a request for a foreign filing license. The application's filing receipt contains further information and guidance as to the status of applicant's license for foreign filing.

Applicants may wish to consult the USPTO booklet, "General Information Concerning Patents" (specifically, the section entitled "Treaties and Foreign Patents") for more information on timeframes and deadlines for filing foreign patent applications. The guide is available either by contacting the USPTO Contact Center at 800-786-9199, or it can be viewed on the USPTO website at http://www.uspto.gov/web/offices/pac/doc/general/index.html.

For information on preventing theft of your intellectual property (patents, trademarks and copyrights), you may wish to consult the U.S. Government website, http://www.stopfakes.gov. Part of a Department of Commerce initiative, this website includes self-help "toolkits" giving innovators guidance on how to protect intellectual property in specific countries such as China, Korea and Mexico. For questions regarding patent enforcement issues, applicants may call the U.S. Government hotline at 1-866-999-HALT (1-866-999-4158).

LICENSE FOR FOREIGN FILING UNDER

Title 35, United States Code, Section 184

Title 37, Code of Federal Regulations, 5.11 & 5.15

GRANTED

The applicant has been granted a license under 35 U.S.C. 184, if the phrase "IF REQUIRED, FOREIGN FILING LICENSE GRANTED" followed by a date appears on this form. Such licenses are issued in all applications where the conditions for issuance of a license have been met, regardless of whether or not a license may be required as

set forth in 37 CFR 5.15. The scope and limitations of this license are set forth in 37 CFR 5.15(a) unless an earlier license has been issued under 37 CFR 5.15(b). The license is subject to revocation upon written notification. The date indicated is the effective date of the license, unless an earlier license of similar scope has been granted under 37 CFR 5.13 or 5.14.

This license is to be retained by the licensee and may be used at any time on or after the effective date thereof unless it is revoked. This license is automatically transferred to any related applications(s) filed under 37 CFR 1.53(d). This license is not retroactive.

The grant of a license does not in any way lessen the responsibility of a licensee for the security of the subject matter as imposed by any Government contract or the provisions of existing laws relating to espionage and the national security or the export of technical data. Licensees should apprise themselves of current regulations especially with respect to certain countries, of other agencies, particularly the Office of Defense Trade Controls, Department of State (with respect to Arms, Munitions and Implements of War (22 CFR 121-128)); the Bureau of Industry and Security, Department of Commerce (15 CFR parts 730-774); the Office of Foreign AssetsControl, Department of Treasury (31 CFR Parts 500+) and the Department of Energy.

NOT GRANTED

No license under 35 U.S.C. 184 has been granted at this time, if the phrase "IF REQUIRED, FOREIGN FILING LICENSE GRANTED" DOES NOT appear on this form. Applicant may still petition for a license under 37 CFR 5.12, if a license is desired before the expiration of 6 months from the filing date of the application. If 6 months has lapsed from the filing date of this application and the licensee has not received any indication of a secrecy order under 35 U.S.C. 181, the licensee may foreign file the application pursuant to 37 CFR 5.15(b).

UNITED STATES PATENT AND TRADEMARK OFFICE

Commissioner for Patents
United States Patent and Trademark Office
P.O. Box 1450
Alexandria, VA 22313-1450
www.uspto.gov

K&L GATES LLP
1900 MAIN STREET,
SUITE 600
IRVINE, CA 92614-7319

MAILED

MAR 0 2 2010

OFFICE OF PETITIONS

In re Application of :
Daniel THAYER :
Application No. 11/409,617 : ON PETITION
Filed: April 24, 2006 :
Attorney Docket No. SAFES-006A :

This is a decision on the petition under the unintentional provisions of 37 CFR 1.137(b), filed December 17, 2009, to revive the above-identified application.

The petition is **GRANTED**.

The application became abandoned for failure to timely file a reply within the meaning of 37 CFR 1.113 to the final Office action of November 28, 2008. The proposed reply required for consideration of a petition to revive must be a Notice of Appeal (and appeal fee required by 37 CFR 41.20(b)(2), an amendment that *prima facie* places the application in condition for allowance, a Request for Continued Examination and submission (37 CFR 1.114), or the filing of a continuing application under 37 CFR 1.53(b). See MPEP 711.03(c)(II)(A)(2). No extensions of time pursuant to the provisions of 37 CFR 1.136(a) were obtained. Accordingly, the date of abandonment of this application is March 1, 2009.

The petition satisfies the requirements of 37 CFR 1.137(b) in that petitioner has supplied (1) the reply in the form of a Request for Continued Examination (RCE) and fee of $405, and the submission required by 37 CFR 1.114; (2) the petition fee of $810; and (3) a proper statement of unintentional delay.

It is not apparent whether the person signing the statement of unintentional delay was in a position to have firsthand or direct knowledge of the facts and circumstances of the delay at issue. Nevertheless, such statement is being treated as having been made as the result of a reasonable inquiry into the facts and circumstances of such delay. See 37 CFR 10.18(b) and

Changes to Patent Practice and Procedure; Final Rule Notice, 62 Fed. Reg. 53131, 53178 (October 10, 1997), 1203 Off. Gaz. Pat. Office 63, 103 (October 21, 1997). In the event that such an inquiry has not been made, petitioner must make such an inquiry. If such inquiry results in the discovery that it is not correct that the entire delay in filing the required reply from the due date for the reply until the filing of a grantable petition pursuant to 37 CFR 1.137(b) was unintentional, petitioner must notify the Office.

The fee of $555 charged with the petition filed December 17, 2009, will be refunded back to Deposit Account No. 50-3207 in the normal course of business. Since it was subsequent to the maximum extendable period for reply, it is unnecessary.

The Office acknowledges the Revocation Power of Attorney filed with the petition dated December 17, 2009, and it has been accepted.

Telephone inquiries concerning this decision should be directed to the undersigned at (571) 272-6735.

This application is being referred to Technology Center AU 3767 for processing of the RCE and for appropriate action by the Examiner in the normal course of business on the amendment submitted in accordance with 37 CFR 1.114.

/DCG/
Diane C. Goodwyn
Petitions Examiner
Office of Petitions

UNITED STATES PATENT AND TRADEMARK OFFICE

UNITED STATES DEPARTMENT OF COMMERCE
United States Patent and Trademark Office
Address: COMMISSIONER FOR PATENTS
P.O. Box 1450
Alexandria, Virginia 22313-1450
www.uspto.gov

APPLICATION NUMBER	FILING OR 371(C) DATE	FIRST NAMED APPLICANT	ATTY. DOCKET NO./TITLE
11/409,617	04/24/2006	Daniel Thayer	SAFES-006A

CONFIRMATION NO. 3508

POWER OF ATTORNEY NOTICE

7663
STETINA BRUNDA GARRED & BRUCKER
75 ENTERPRISE, SUITE 250
ALISO VIEJO, CA 92656

Date Mailed: 03/01/2010

NOTICE REGARDING CHANGE OF POWER OF ATTORNEY

This is in response to the Power of Attorney filed 12/17/2009.

- The Power of Attorney to you in this application has been revoked by the assignee who has intervened as provided by 37 CFR 3.71. Future correspondence will be mailed to the new address of record(37 CFR 1.33).

/dcgoodwyn/

Office of Data Management, Application Assistance Unit (571) 272-4000, or (571) 272-4200, or 1-888-786-0101

UNITED STATES PATENT AND TRADEMARK OFFICE

UNITED STATES DEPARTMENT OF COMMERCE
United States Patent and Trademark Office
Address: COMMISSIONER FOR PATENTS
P.O. Box 1450
Alexandria, Virginia 22313-1450
www.uspto.gov

APPLICATION NUMBER	FILING OR 371(C) DATE	FIRST NAMED APPLICANT	ATTY. DOCKET NO./TITLE
11/409,617	04/24/2006	Daniel Thayer	SAFES-006A

CONFIRMATION NO. 3508

POA ACCEPTANCE LETTER

45200
K&L Gates LLP
1900 MAIN STREET, SUITE 600
IRVINE, CA 92614-7319

Date Mailed: 03/01/2010

NOTICE OF ACCEPTANCE OF POWER OF ATTORNEY

This is in response to the Power of Attorney filed 12/17/2009.

The Power of Attorney in this application is accepted. Correspondence in this application will be mailed to the above address as provided by 37 CFR 1.33.

/dcgoodwyn/

Office of Data Management, Application Assistance Unit (571) 272-4000, or (571) 272-4200, or 1-888-786-0101

UNITED STATES PATENT AND TRADEMARK OFFICE

UNITED STATES DEPARTMENT OF COMMERCE
United States Patent and Trademark Office
Address: COMMISSIONER FOR PATENTS
P.O. Box 1450
Alexandria, Virginia 22313-1450
www.uspto.gov

STEPHEN A GRATTON
THE LAW OFFICE OF STEVE GRATTON
2764 SOUTH BRAUN WAY
LAKEWOOD, CO 80228

Mail Date: 04/21/2010

Applicant	: David R. Hembree	: DECISION ON REQUEST FOR
Patent Number	: 7659612	: RECALCULATION of PATENT
Issue Date	: 02/09/2010	: TERM ADJUSTMENT IN VIEW
Appliction No	: 11/409,638	: OF WYETH
Filed	: 04/24/2006	:
		:

The Patentee's Request for Recalculation is **DISMISSED.**

This Request is deemed ineligible for consideration for one or more of the following reasons:

(A). The patent for which PTA recalculation is requested is either a design or reissue application or is a reexamination proceeding;

(B). The patent for which PTA recalculation is requested resulted from a utility or plant application filed under 35 USC 111(a) before May 29, 2000 and no CPA filed in the application on/after May 29, 2000;

(C). The patent for which PTA recalculation is requested resulted from an international application in which the international filing date was before May 29, 2000 and no CPA filed in the application on/after May 29, 2000;

(D). The patent for which PTA recalculation is requested issued on/after March 2, 2010;

(E). The Request for Recalculation was filed more than 180 days after the grant date of the patent and the request was not filed within two months of a dismissal of a request for reconsideration of the of the patent term under 37 CFR 1.705(d);

(F). The Request for Recalculation is not solely limited to USPTO pre-Wyeth interpretation of 35 U.S.C. 154(b)(2)(A);

or

(G). A civil action was filed pursuant to 35 U.S.C. 154(b)(4)(A)concerning the same patent at issue in this request.

Patentee may file a reply to this decision dismissing the Request for Recalculation. Patentee must file such reply within one month or thirty days, whichever is longer, of the mail date of the decision dismissing the Request for Recalculation. No fee is required if patentee is asserting in the reply that the dismissal for ineligibility is improper.

Patentee should use document code PET.OP if electronically filing a reply to this dismissal. If the USPTO finds that the request was improperly deemed ineligible, the USPTO will mail applicant a recalculation determination.

Patentee should be aware that in order to preserve the right to review in the United States District Court for the District of Columbia of the USPTO patent term adjustment determination, patentee must ensure that he or she also take the steps required under 35 U.S.C. 154(b)(4)(A). Nothing in the request for recalculation should be construed as providing an alternative time frame for commencing a civil action under 35 U.S.C. 154 (b)(4)(A).

Any questions concerning this decision should be directed to the Office of Patent Legal Administration at 571-272-7702.

UNITED STATES PATENT AND TRADEMARK OFFICE

UNITED STATES DEPARTMENT OF COMMERCE
United States Patent and Trademark Office
Address: COMMISSIONER FOR PATENTS
P.O. Box 1450
Alexandria, Virginia 22313-1450
www.uspto.gov

BRUCE L. ADAMS, ESQ.
SUITE 1231
17 BATTERY PLACE
NEW YORK, NY 10004

Mail Date: 04/21/2010

Applicant	: Masayuki Sato	: DECISION ON REQUEST FOR
Patent Number	: 7581297	: RECALCULATION of PATENT
Issue Date	: 09/01/2009	: TERM ADJUSTMENT IN VIEW
Appliction No	: 11/409,653	: OF WYETH AND NOTICE OF INTENT TO
Filed	: 04/24/2006	: ISSUE CERTIFICATE OF CORRECTION
		:

The Request for Recalculation is **GRANTED** to the extent indicated.

The patent term adjustment has been determined to be **392** days. The USPTO will *sua sponte* issue a certificate of correction reflecting the amount of PTA days determined by the recalculation.

Prior to the issuance of the certificate of correction, the USPTO will afford patentee an opportunity to be heard and request reconsideration. Accordingly, patentee has **one month or thirty (30) days**, whichever is longer, to file a request for reconsideration of this patent term adjustment calculation. See 35 U.S.C. 154(b)(3)(B)(ii) and 37 CFR 1.322(a)(4). No extensions of time will be granted under 37 CFR 1.136.

Patentee should use document code PET.OP if electronically filing a request for reconsideration of this patent term adjustment calculation. The patentee must also include the information required by 37 CFR 1.705(b)(2) and the fee required by 37 CFR 1.18(e). If patentee does not file a timely request for reconsideration of this patent term adjustment calculation including the information required by 37 CFR 1.705(b)(2) and the fee required by 37 CFR 1.18(e), the USPTO will issue a certificate of correction reflecting the PTA determination noted above.

Patentee should be aware that in order to preserve the right to review in the United States District Court for the District of Columbia of the USPTO patent term adjustment determination, patentee must ensure that he or she also take the steps required under 35 U.S.C. 154(b)(4)(A) in a timely manner. Nothing in the request for recalculation should be construed as providing an alternative time frame for commencing a civil action under 35 U.S.C. 154(b)(4)(A).

Any questions concerning this decision should be directed to the Office of Patent Legal Administration at 571-272-7702.

UNITED STATES PATENT AND TRADEMARK OFFICE

UNITED STATES DEPARTMENT OF COMMERCE
United States Patent and Trademark Office
Address: COMMISSIONER FOR PATENTS
P.O. Box 1450
Alexandria, Virginia 22313-1450
www.uspto.gov

BRUCE L. ADAMS, ESQ.
SUITE 1231
17 BATTERY PLACE
NEW YORK, NY 10004

Mail Date: 05/18/2010

Applicant : Masayuki Sato
Patent Number : 7581297
Issue Date : 09/01/2009
Application No: 11/409,653
Filed : 04/24/2006

: NOTICE CONCERNING IMPROPER
: CALCULATION OF PATENT TERM
: ADJUSTMENT BASED UPON USPTO
: IMPROPERLY MEASURING REDUCTION
: PERIOD UNDER 37 CFR 1.704(c)(10).

The United States Patent and Trademark Office (USPTO) discovered that in processing the recent recalculation decisions mailed in response to patentee's filed Request for Recalculation of Patent Term Adjustment in view of Wyeth, the USPTO improperly measured the reduction period for reductions under 37 CFR 1.704(c)(10). Pursuant to 37 CFR 1.704(c)(10), patentee's reduction begins on the date of filing the amendment under 37 CFR 1.312 ("1.312 amendment") or other related paper and ends on the date that the Office mails a response to the filing of the 1.312 amendment or other paper. It has been discovered that during the recalculation, the calculation failed to the limit the reduction to the mail date of the response to the 1.312 amendment or other paper. Accordingly, patentee's reductions were greater than warranted.

This notice **VACATES** the previous GRANTED request for recalculation and provides patentee with a revised GRANTED recalculation.

The patent term adjustment has been determined to be **412** days. The USPTO will *sua sponte* issue a certificate of correction reflecting the amount of patent term adjustment (PTA) days determined by the recalculation.

Prior to the issuance of the certificate of correction, the USPTO will afford patentee an opportunity to be heard and request reconsideration. Accordingly, patentee has **one month or thirty (30) days** from the mail date of this notice, whichever is longer, to file a request for reconsideration of this PTA calculation. See 35 U.S.C. § 154(b)(3)(B)(ii) and 37 CFR 1.322(a)(4).

Patentee should use document code PET.OP if electronically filing a request for reconsideration of this PTA calculation. The patentee must also include the information required by 37 CFR 1.705(b)(2), and the fee required by 37 CFR 1.18(e). If patentee does not file a timely request for reconsideration of this PTA calculation, including the information required by 37 CFR 1.705(b)(2) and the fee required by 37 CFR 1.18(e), the USPTO will issue a certificate of correction reflecting the PTA determination noted above.

Patentee should be aware that in order to preserve the right of review of the USPTO's PTA determination in the United States District Court for the District of Columbia, patentee must ensure that the steps required under 35 U.S.C. § 154 (b)(4) are taken in a timely manner. Nothing in the request for recalculation should be construed as providing an alternative time frame for commencing a civil action under 35 U.S.C. § 154(b)(4).

UNITED STATES PATENT AND TRADEMARK OFFICE

Commissioner for Patents
United States Patent and Trademark Office
P.O. Box 1450
Alexandria, VA 22313-1450
www.uspto.gov

Vic Lin
Myers, Dawes, Andras & Sherman, LLP
Suite 1150
19900 MacArthur Boulevard
Irvine, CA 92612

COPY MAILED

JAN 26 2009

OFFICE OF PETITIONS

In re Application of :
Christopher A. Coppock :
Application No. 11/409,675 : DECISION ON PETITION
Filed: April 24, 2006 : TO WITHDRAW
Attorney Docket No. FMI1.PAU.52 : FROM RECORD
:

This is a decision on the Request to Withdraw as attorney or agent of record under 37 C.F.R. § 1.36(b), filed December 9, 2008.

The request is **APPROVED**.

A grantable request to withdraw as attorney/agent of record must be signed by every attorney/agent seeking to withdraw or contain a clear indication that one attorney is signing on behalf of another/others. A request to withdraw will not be approved unless at least 30 (thirty) days would remain between the date of approval and the later of the expiration date of a time to file a response or the expiration date of the maximum time period which can be extended under 37 C.F.R. § 1.136(a).

The request was signed by Vic Y. Lin on behalf of all attorneys/agents of record. All attorneys/agents of record have been withdrawn.

Applicant is reminded that there is no attorney of record at this time.

The correspondence address has been changed to that of the inventor. The address is copied below.

Telephone inquiries concerning this decision should be directed to Kimberly Inabinet at 571-272-4618.

Kimberly Inabinet
Petitions Examiner
Office of Petitions

cc: Christopher A. Coppock
25 Cala Moreya
Laguna Niguel, CA 92677

UNITED STATES PATENT AND TRADEMARK OFFICE

UNITED STATES DEPARTMENT OF COMMERCE
United States Patent and Trademark Office
Address: COMMISSIONER FOR PATENTS
P.O. Box 1450
Alexandria, Virginia 22313-1450
www.uspto.gov

APPLICATION NUMBER	FILING OR 371(C) DATE	FIRST NAMED APPLICANT	ATTY. DOCKET NO./TITLE
11/409,675	04/24/2006	Christopher A. Coppock	FMI1.PAU.52

CONFIRMATION NO. 2818

POWER OF ATTORNEY NOTICE

Vic Lin
Myers Dawes Andras & Sherman LLP
Suite 1150
19900 MacArthur Blvd.
Irvine, CA 92612

Date Mailed: 01/26/2009

NOTICE REGARDING CHANGE OF POWER OF ATTORNEY

This is in response to the Power of Attorney filed 12/09/2008.

- The withdrawal as attorney in this application has been accepted. Future correspondence will be mailed to the new address of record. 37 CFR 1.33.

/kainabinet/

Office of Data Management, Application Assistance Unit (571) 272-4000, or (571) 272-4200, or 1-888-786-0101

UNITED STATES PATENT AND TRADEMARK OFFICE

Commissioner for Patents
United States Patent and Trademark Office
P.O. Box 1450
Alexandria, VA 22313-1450
www.uspto.gov

THE MATTHEWS FIRM
2000 BERING DRIVE
SUITE 700
HOUSTON TX 77057

COPY MAILED

DEC 1 8 2009

OFFICE OF PETITIONS

In re Application of :
Mosing, et al. :
Application No. 11/409,683 : DECISION ON PETITION
Filed: April 24, 2006 :
Attorney Docket No. FRK - :
046:C3

This is a decision on the petition under the unintentional provisions of 37 CFR 1.137(b), filed September 3, 2009, to revive the above-identified application.

The petition is **DISMISSED.**

Any request for reconsideration of this decision must be submitted within TWO (2) MONTHS from the mail date of this decision. Extensions of time under 37 CFR 1.136(a) are permitted. The reconsideration request should include a cover letter entitled "Renewed Petition under 37 CFR 1.137(b)." This is **not** a final agency action within the meaning of 5 U.S.C. § 704.

The application became abandoned for failure to timely reply within the meaning of 37 CFR 1.113 to the final Office action, mailed January 29, 2007, which set a shortened statutory period for reply of three (3) months. No extensions of time under the provisions of 37 CFR 1.136(a) were obtained. Accordingly, the application became abandoned on April 30, 2007. A Notice of Abandonment was mailed on September 4, 2007.

A grantable petition under 37 CFR 1.137(b) must be accompanied by: (1) the required reply, unless previously filed; (2) the petition fee as set forth in 37 CFR 1.17(m); (3) a statement that the entire delay in filing the required reply from the due date for the reply until the filing of a grantable petition pursuant to 37 CFR 1.137(b) was unintentional; and (4) any terminal

disclaimer (and fee as set forth in 37 CFR 1.20(d)) required by 37 CFR 1.137(d). Where there is a question as to whether either the abandonment or the delay in filing a petition under 37 CFR 1.137 was unintentional, the Director may require additional information. *See* MPEP 711.03(c)(II)(C) and (D). The instant petition lacks items (1) and (3).

With respect to item (1): Petitioners are reminded that after a final Office action, there are only five possible replies: (1) a Notice of Appeal, (2) the filing of a continuing application, (3) a 37 CFR 1.129(a) submission, if appropriate, (4) an amendment after final that makes the case ready for issuance or (5) an RCE. To be a proper reply, an amendment after final must place the case in *prima facie* condition for allowance. Examiner Wright has indicated that the reply filed September 3, 2009 fails to place the application in *prima facie* condition for allowance. Please see the enclosed Advisory Action Before the Filing of an Appeal Brief for more details.

With respect to item (3): There are three periods to be considered during the evaluation of a petition under 37 CFR 1.137(b):

(1) the delay in reply that originally resulted in the abandonment;

(2) the delay in filing an initial petition pursuant to 37 CFR 1.137(b) to revive the application; and

(3) the delay in filing a grantable petition pursuant to 37 CFR 1.137(b) to revive the application.

Currently, the delay has not been shown to the satisfaction of the Director to be unintentional for periods (1) and (2).

As to Period (1):

The patent statute at 35 U.S.C. § 41(a)(7) authorizes the Director to revive an "unintentionally abandoned application." The legislative history of Public Law 97-247 reveals that the purpose of 35 U.S.C. § 41(a)(7) is to permit the Office to have more discretion than in 35 U.S.C. §§ 133 or 151 to revive abandoned applications in appropriate circumstances, but places a limit on this discretion, stating that "[u]nder this section a petition accompanied by either a fee of $500 or a fee of $50 **would not be granted where the abandonment** or the failure to pay the fee for issuing the patent **was intentional** as opposed to being unintentional or unavoidable." [emphasis added]. See H.R. Rep. No. 542, 97th Cong., 2d Sess. 6-7 (1982), *reprinted in* 1982 U.S.C.C.A.N. 770-71. The revival of an intentionally abandoned

application is antithetical to the meaning and intent of the statute and regulation.

35 U.S.C. § 41(a)(7) authorizes the Director to accept a petition "for the revival of an unintentionally abandoned application for a patent." As amended December 1, 1997, 37 CFR 1.137(b)(3) provides that a petition under 37 CFR 1.137(b) must be accompanied by a statement that the delay was unintentional, but provides that "[t]he Commissioner may require additional information where there is a question whether the delay was unintentional." Where, as here, there is a question whether the initial delay was unintentional, the petitioners must meet the burden of establishing that the delay was unintentional within the meaning of 35 U.S.C. § 41(a)(7) and 37 CFR 1.137(b). *See* In re Application of G, 11 USPQ2d 1378, 1380 (Comm'r Pats. 1989); 37 CFR 1.137(b). Here, in view of the inordinate delay (over two years) in resuming prosecution, there is a question whether the entire delay was unintentional. Petitioners should note that the issue is not whether some of the delay was unintentional by any party; rather, the issue is whether the entire delay has been shown to the satisfaction of the Director to be unintentional.

The question under 37 CFR 1.137(b) for period (1) is whether the delay on the part of the party having the right or authority to reply to avoid abandonment (or not reply) was unintentional. Accordingly, any renewed petition must clearly identify the party having the right to reply to avoid abandonment on April 29, 2007. That party, in turn must explain what effort(s) was made to further reply to the outstanding Office action and, further, why no reply was filed. If no effort was made to further reply, then that party must explain why the delay in this application does not result from a deliberate course of action (or inaction). Likewise, as practitioner was counsel of record at the time of abandonment, practitioner should explain why this application became abandoned while it was under his control and what efforts were made to further reply of itself and with whom this matter was discussed outside of the Matthews Firm. Copies of any correspondence relating to the filing, or to not filing a further reply to the outstanding Office action are required from responsible person(s), and whoever else was involved with this application at the time of abandonment. Statements are required from the responsible person(s) having firsthand knowledge of the circumstances surrounding the lack of a reply to the outstanding Office action. As the courts have made clear, it is pointless for the USPTO to revive a long abandoned application without an adequate showing that the delay did not result from a deliberate course of action. *See* Lawman Armor v. Simon, 2005 U.S. Dist. LEXIS 10843, 74 USPQ2d 1633 (DC EMich 2005); Field Hybrids, LLC v. Toyota Motor Corp., 2005 U.S. Dist. LEXIS 1159 (D. Minn Jan. 27, 2005); Lumenyte Int'l Corp. v. Cable Lite Corp., Nos. 96-

1011, 96-1077, 1996 U.S. App. LEXIS 16400, 1996 WL 383927 (Fed. Cir. July 9, 1996) (unpublished) (patents held unenforceable due to a finding of inequitable conduct in submitting an inappropriate statement that the abandonment was unintentional).

As to Period (2):

Likewise, where the applicant deliberately chooses not to seek or persist in seeking the revival of an abandoned application, or where the applicant deliberately chooses to delay seeking the revival of an abandoned application, the resulting delay in seeking revival of the abandoned application cannot be considered as "unintentional" within the meaning of 37 CFR 1.137(b). *See* MPEP 711.03(c).

The language of both 35 U.S.C. § 41(a)(7) and 37 CFR 1.137(b) are clear and unambiguous, and, furthermore, without qualification. That is, the delay in filing the reply during prosecution, as well as in filing the petition seeking revival, must have been, without qualification, "unintentional" for the reply to now be accepted on petition. The Office requires that the entire delay be at least unintentional as a prerequisite to revival of an abandoned application to prevent abuse and injury to the public. *See* H.R. Rep. No. 542, 97th Cong., 2d Sess. 7 (1982), reprinted in 1982 U.S.C.C.A.N. 771 ("[i]n order to prevent abuse and injury to the public the Commissioner . . . could require applicants to act promptly after becoming aware of the abandonment"). The December 1997 change to 37 CFR 1.137 did not create any new right to overcome an intentional delay in seeking revival, or in renewing an attempt at seeking revival, of an abandoned application. *See* Changes to Patent Practice and Procedure; Final Rule Notice, 62 Fed. Reg. 53131, 53160 (October 10, 1997), 1203 Off. Gaz. Pat. Office 63, 87 (October 21, 1997), which clearly stated that any protracted delay (here, over two years) could trigger, as here, a request for additional information. As the courts have since made clear, a protracted delay in seeking revival, as here, requires a petitioner's detailed explanation seeking to excuse the delay as opposed to USPTO acceptance of a general allegation of unintentional delay. *See* Lawman Armor v. Simon, 2005 U.S. Dist. LEXIS 10843, 74 USPQ2d 1633, at 1637-8 (DC EMich 2005); Field Hybrids, LLC v. Toyota Motor Corp., 2005 U.S. Dist. LEXIS 1159 (D. Minn Jan. 27, 2005) at *21-*23. Statements are required from the responsible person(s) having firsthand knowledge of the circumstances surrounding the protracted delay, after the abandonment date, in seeking revival.

As noted in MPEP 711.03(c)(II), subsection D, in instances in which such petition was not filed within 1 year of the date of abandonment of the application, applicants should include:

(A) the date that the applicant first became aware of the abandonment of the application; and
(B) a showing as to how the delay in discovering the abandoned status of the application occurred despite the exercise of due care or diligence on the part of the applicant.

In either instance, applicants' failure to carry the burden of proof to establish that the "entire" delay was "unavoidable" or "unintentional" may lead to the denial of a petition under 37 CFR 1.137(b), regardless of the circumstances that originally resulted in the abandonment of the application. *See also* New York University v. Autodesk, 2007 U.S. DIST LEXIS, U.S.District LEXIS 50832, *10 -*12 (S.D.N.Y. 2007)(protracted delay in seeking revival undercuts assertion of unintentional delay).

Any renewed petition may be addressed as follows:

By Mail: Mail Stop PETITION
Commissioner for Patents
P. O. Box 1450
Alexandria, VA 22313-1450

By hand: U. S. Patent and Trademark Office
Customer Service Window, Mail Stop Petitions
Randolph Building
401 Dulany Street
Alexandria, VA 22314

The centralized facsimile number is **(571) 273-8300.**

Correspondence regarding this decision may also be filed through the electronic filing system of the USPTO.

Telephone inquiries concerning this decision should be directed to the undersigned at (571) 272-3230.

Shirene Willis Brantley
Senior Petitions Attorney
Office of Petitions

Enclosure: Advisory Action Before the Filing of an Appeal Brief

Advisory Action Before the Filing of an Appeal Brief	**Application No.** 11/409,683	**Applicant(s)** MOSING ET AL.	
	Examiner GIOVANNA C. WRIGHT	**Art Unit** 3672	

--The MAILING DATE of this communication appears on the cover sheet with the correspondence address --

THE REPLY FILED 03 September 2009 FAILS TO PLACE THIS APPLICATION IN CONDITION FOR ALLOWANCE.

1. ☐ The reply was filed after a final rejection, but prior to or on the same day as filing a Notice of Appeal. To avoid abandonment of this application, applicant must timely file one of the following replies: (1) an amendment, affidavit, or other evidence, which places the application in condition for allowance; (2) a Notice of Appeal (with appeal fee) in compliance with 37 CFR 41.31; or (3) a Request for Continued Examination (RCE) in compliance with 37 CFR 1.114. The reply must be filed within one of the following time periods:
   a) ☒ The period for reply expires 3 months from the mailing date of the final rejection.
   b) ☐ The period for reply expires on: (1) the mailing date of this Advisory Action, or (2) the date set forth in the final rejection, whichever is later. In no event, however, will the statutory period for reply expire later than SIX MONTHS from the mailing date of the final rejection.

   Examiner Note: If box 1 is checked, check either box (a) or (b). ONLY CHECK BOX (b) WHEN THE FIRST REPLY WAS FILED WITHIN TWO MONTHS OF THE FINAL REJECTION. See MPEP 706.07(f).

Extensions of time may be obtained under 37 CFR 1.136(a). The date on which the petition under 37 CFR 1.136(a) and the appropriate extension fee have been filed is the date for purposes of determining the period of extension and the corresponding amount of the fee. The appropriate extension fee under 37 CFR 1.17(a) is calculated from: (1) the expiration date of the shortened statutory period for reply originally set in the final Office action; or (2) as set forth in (b) above, if checked. Any reply received by the Office later than three months after the mailing date of the final rejection, even if timely filed, may reduce any earned patent term adjustment. See 37 CFR 1.704(b).

NOTICE OF APPEAL

2. ☐ The Notice of Appeal was filed on _____. A brief in compliance with 37 CFR 41.37 must be filed within two months of the date of filing the Notice of Appeal (37 CFR 41.37(a)), or any extension thereof (37 CFR 41.37(e)), to avoid dismissal of the appeal. Since a Notice of Appeal has been filed, any reply must be filed within the time period set forth in 37 CFR 41.37(a).

AMENDMENTS

3. ☒ The proposed amendment(s) filed after a final rejection, but prior to the date of filing a brief, will not be entered because
   (a) ☒ They raise new issues that would require further consideration and/or search (see NOTE below);
   (b) ☐ They raise the issue of new matter (see NOTE below);
   (c) ☐ They are not deemed to place the application in better form for appeal by materially reducing or simplifying the issues for appeal; and/or
   (d) ☐ They present additional claims without canceling a corresponding number of finally rejected claims.

   NOTE: *See Continuation Sheet*. (See 37 CFR 1.116 and 41.33(a)).
4. ☐ The amendments are not in compliance with 37 CFR 1.121. See attached Notice of Non-Compliant Amendment (PTOL-324).
5. ☐ Applicant's reply has overcome the following rejection(s): _____.
6. ☐ Newly proposed or amended claim(s) _____ would be allowable if submitted in a separate, timely filed amendment canceling the non-allowable claim(s).
7. ☒ For purposes of appeal, the proposed amendment(s): a) ☒ will not be entered, or b) ☐ will be entered and an explanation of how the new or amended claims would be rejected is provided below or appended.
   The status of the claim(s) is (or will be) as follows:
   Claim(s) allowed: _____.
   Claim(s) objected to: _____.
   Claim(s) rejected: *1-6 and 13-15*.
   Claim(s) withdrawn from consideration: *7-12*.

AFFIDAVIT OR OTHER EVIDENCE

8. ☐ The affidavit or other evidence filed after a final action, but before or on the date of filing a Notice of Appeal will not be entered because applicant failed to provide a showing of good and sufficient reasons why the affidavit or other evidence is necessary and was not earlier presented. See 37 CFR 1.116(e).
9. ☐ The affidavit or other evidence filed after the date of filing a Notice of Appeal, but prior to the date of filing a brief, will not be entered because the affidavit or other evidence failed to overcome all rejections under appeal and/or appellant fails to provide a showing a good and sufficient reasons why it is necessary and was not earlier presented. See 37 CFR 41.33(d)(1).
10. ☐ The affidavit or other evidence is entered. An explanation of the status of the claims after entry is below or attached.

REQUEST FOR RECONSIDERATION/OTHER

11. ☐ The request for reconsideration has been considered but does NOT place the application in condition for allowance because: _____.
12. ☐ Note the attached Information *Disclosure Statement*(s). (PTO/SB/08) Paper No(s). _____
13. ☐ Other: _____.

/Giovanna C. Wright/
Primary Examiner, Art Unit 3672

Continuation of 3. NOTE: The features of the throat access blocking member being biased towards the oil field tubular joint to contact the joint, and the door being laterally exterior to the throat when in an open state require further search and consideration.

UNITED STATES PATENT AND TRADEMARK OFFICE

Commissioner for Patents
United States Patent and Trademark Office
P.O. Box 1450
Alexandria, VA 22313-1450
www.uspto.gov

JAMES C. WESEMAN
LAW OFFICES OF JAMES C. WESEMAN APC
401 WEST A STREET,
SUITE 1600
SAN DIEGO, CA 92101

MAILED

JUN 09 2010

OFFICE OF PETITIONS

In re Application of :
Jacobus J.M. Van Dongen, et al. :
Application No. 11/409,718 : DECISION ON PETITION
Filed: April 24, 2006 :
Attorney Docket No.: 2183-7785US :

This is a decision on the petition, filed April 20, 2010, requesting withdrawal of the holding of abandonment of the above-identified application under the provisions 37 CFR 1.181 (no fee).

There is no indication that the person signing the petition was ever given a power of attorney or authorization of agent to prosecute the above-identified application. However, in accordance with 37 CFR 1.34(a), the signature of Ned Israelsen appearing on the petition shall constitute a representation to the United States Patent and Trademark Office that he is authorized to represent the particular party on whose behalf he acts. While a courtesy copy of this decision is being mailed Mr. Israelsen, all future correspondence will be directed solely to the address of record.

The petition is **DISMISSED**.

The application became abandoned on October 19, 2009 for a failure to timely reply to the September 18, 2009 Notice Requiring Excess Claim Fees, which set a One (1) Month or Thirty (30) day petition for response. This decision precedes the mailing of a Notice of Abandonment.

Petitioner requests that the abandonment be withdrawn since "the September 18 notice was not sent to the right attorney, despite filing of change of attorney and mailing address approximately 9 months earlier." Petitioner explains that a Request for Withdrawal as Attorney or Agent and Change of Correspondence Address form was filed on March 3, 2008, followed by a new Power of Attorney form "appointing James C. Weseman Reg. No. 30,507...." filed on December 1, 2008.

A review of the record confirms that a Request for Withdrawal as Attorney or Agent was filed on March 3, 2008, followed by a new Power of Attorney on December 1, 2008. However, Petitioner is reminded that a Request for Withdrawal as Attorney or Agent is effective when approved by

the Office. There is no evidence that the Request for Withdrawal was approved prior to the mailing of the September 18, 2009 notice. Further, petition should note that, while a new Power of Attorney is effective when filed, the Power of Attorney filed December 1, 2008 was not acceptable as it was filed on behalf of the assignee without the requisite statement under 3.73(b). Consequently, the notice of September 18, 2009 was, in fact, mailed to the address of record at the time.

Pursuant to 35 U.S.C. 133, "[u]pon failure of the applicant to prosecute the application within six months after any action therein, of which notice has been given or mailed to the application, or within such shorter time, not less than thirty days, as fixed by the Director in such action, the application shall be regarded as abandoned by the parties thereto, unless it be shown to satisfactory of the Director that such delay was unavoidable.

This application was properly held abandoned by operation of law and will remain abandoned until petitioner takes some other action in the above application to continue prosecution.

Petitioner may consider filing a petition under 37 CFR 1.137(a) to revive an unavoidably abandoned application or a petition under 37 CFR 1.137(b) to revive an unintentionally abandoned application, instead of filing a renewed petition under 37 CFR 1.181. Petition is reminded that the mere suggestion that a petition under the provisions of 137(a) or 1.137(b) be filed does not necessarily mean that any petition will be granted, since the petition must comply with the respective requirements set forth below.

A grantable petition under 37 CFR 1.137(a) must be accompanied by: (1) the required reply, unless previously filed; (2) the petition fee as set forth in 37 CFR 1.17(l); (3) a showing to the satisfaction of the Director that the entire delay in filing the required reply from the due date for the reply until the filing of a grantable petition pursuant to 37 CFR 1.137(a) was unavoidable; and (4) any terminal disclaimer (and fee as set forth in 37 CFR 1.20(d)) required pursuant to 37 CFR 1.137(d).

A grantable petition under 37 CFR 1.137(b) must be accompanied by: (1) the required reply, unless previously filed; (2) the petition fee as set forth in 37 CFR 1.17(m); (3) a statement that the entire delay in filing the required reply from the due date for the reply until the filing of a grantable petition pursuant to 37 CFR 1.137(b) was unintentional; and (4) any terminal disclaimer (and fee as set forth in 37 CFR 1.20(d)) required by 37 CFR 1.137(d). Where there is a question as to whether either the abandonment or the delay in filing a petition under 37 CFR 1.137 was unintentional, the Director may require additional information. See MPEP 711.03(c)(II)(C) and (D).

Public Law 97-247, § 3, 96 Stat. 317 (1982), which revised patent and trademark fees, amended 35 U.S.C. § 41(a)(7) to provide for the revival of an "unintentionally" abandoned application without a showing that the delay in prosecution or in late payment of the issue fee was "unavoidable." This amendment to 35 U.S.C. § 41(a)(7) has been implemented in 37 CFR 1.137(b).

Further correspondence with respect to this matter should be delivered through one of the following mediums:

By mail:	Mail Stop PETITIONS Commissioner for Patents Post Office Box 1450 Alexandria, VA 22313-1450
By hand:	Customer Service Window Mail Stop Petitions Randolph Building 401 Dulany Street Alexandria, VA 22314
By fax:	(571) 273-8300 ATTN: Office of Petitions
By Internet:	EFS-Web[1]

Any questions concerning this matter may be directed to the undersigned at (571) 272-3204.

Sherry D. Brinkley
Petitions Examiner
Office of Petitions

cc: NED A. ISRAELSEN
KNOBBE, MARTENS, OLSON & BEAR, LLP
2040 MAIN STREET
FOURTEENTH FLOOR
IRVINE, CA 92614

[1] www.uspto.gov/ebc/efs_help.html (for help using EFS-Web call the Patent Electronic Business Center at (866) 217-9197)

SPE RESPONSE FOR CERTIFICATE OF CORRECTION

Paper No.: _____

DATE : 11-20-08

TO SPE OF : ART UNIT 3711

SUBJECT : Request for Certificate of Correction for Appl. No.: 11/409722 Patent No.: 7371173

Please respond to this request for a certificate of correction within 7 days.

FOR IFW FILES:

Please review the requested changes/corrections as shown in the **COCIN** document(s) in the IFW application image. No new matter should be introduced, nor should the scope or meaning of the claims be changed.

Please complete the response (see below) and forward the completed response to scanning using document code **COCX**.

FOR PAPER FILES:

Please review the requested changes/corrections as shown in the attached certificate of correction. Please complete this form (see below) and forward it with the file to:

Certificates of Correction Branch (CofC)
South Tower - 9A22
Palm Location 7580

Certificates of Correction Branch
703-308-9390 ext. 123

Thank You For Your Assistance

The request for issuing the above-identified correction(s) is hereby:
Note your decision on the appropriate box.

- ☐ **Approved** — **All** changes apply.
- ☐ **Approved in Part** — Specify below which changes **do not** apply.
- ☐ **Denied** — State the reasons for denial below.

Comments: _____

_____ **SPE** _____ **Art Unit**

SPE RESPONSE FOR CERTIFICATE OF CORRECTION

Paper No.: _____

DATE : 11-20-08

TO SPE OF : ART UNIT 3711

SUBJECT : Request for Certificate of Correction for Appl. No.: 11/409722 Patent No.: 7371173

Please respond to this request for a certificate of correction within 7 days.

FOR IFW FILES:

Please review the requested changes/corrections as shown in the **COCIN** document(s) in the IFW application image. No new matter should be introduced, nor should the scope or meaning of the claims be changed.

Please complete the response (see below) and forward the completed response to scanning using document code **COCX**.

FOR PAPER FILES:

Please review the requested changes/corrections as shown in the attached certificate of correction. Please complete this form (see below) and forward it with the file to:

Certificates of Correction Branch (CofC)
South Tower - 9A22
Palm Location 7580

/Gene Kim/
Certificates of Correction Branch
703-308-9390 ext. 123

Thank You For Your Assistance

The request for issuing the above-identified correction(s) is hereby:
Note your decision on the appropriate box.

☒ **Approved**	**All** changes apply.
☐ **Approved in Part**	Specify below which changes **do not** apply.
☐ **Denied**	State the reasons for denial below.

Comments: 06/9/08 applicant paid fee of $100 for apparently for "certificate of correction" under 37 CFR 120(a) which appears insufficient

Applicant is correcting the inventorship under 120(b) which requires a fee of $130.

An additional $30 is required to be charged.

Gene Kim
Digitally signed by Gene Kim
DN: cn=Gene Kim, ou=US, o=PTO, ou=AU3711, email=eugene.kim@uspto.gov
Date: 2008.08.02 06:35:56 -04'07'

SPE **Art Unit**

UNITED STATES PATENT AND TRADEMARK OFFICE

UNITED STATES DEPARTMENT OF COMMERCE
United States Patent and Trademark Office
Address: COMMISSIONER FOR PATENTS
P.O. Box 1450
Alexandria, Virginia 22313-1450
www.uspto.gov

HALLIBURTON ENERGY SERVICES
P.O. BOX 819052
Dallas, TX 75381-9052

Mail Date: 04/21/2010

Applicant	: Neil Hepburn	: DECISION ON REQUEST FOR
Patent Number	: 7584795	: RECALCULATION of PATENT
Issue Date	: 09/08/2009	: TERM ADJUSTMENT IN VIEW
Appliction No	: 11/409,724	: OF WYETH AND NOTICE OF INTENT TO
Filed	: 04/24/2006	: ISSUE CERTIFICATE OF CORRECTION
		:

The Request for Recalculation is **GRANTED** to the extent indicated.

The patent term adjustment has been determined to be **204** days. The USPTO will *sua sponte* issue a certificate of correction reflecting the amount of PTA days determined by the recalculation.

Prior to the issuance of the certificate of correction, the USPTO will afford patentee an opportunity to be heard and request reconsideration. Accordingly, patentee has **one month or thirty (30) days**, whichever is longer, to file a request for reconsideration of this patent term adjustment calculation. See 35 U.S.C. 154(b)(3)(B)(ii) and 37 CFR 1.322(a)(4). No extensions of time will be granted under 37 CFR 1.136.

Patentee should use document code PET.OP if electronically filing a request for reconsideration of this patent term adjustment calculation. The patentee must also include the information required by 37 CFR 1.705(b)(2) and the fee required by 37 CFR 1.18(e). If patentee does not file a timely request for reconsideration of this patent term adjustment calculation including the information required by 37 CFR 1.705(b)(2) and the fee required by 37 CFR 1.18(e), the USPTO will issue a certificate of correction reflecting the PTA determination noted above.

Patentee should be aware that in order to preserve the right to review in the United States District Court for the District of Columbia of the USPTO patent term adjustment determination, patentee must ensure that he or she also take the steps required under 35 U.S.C. 154(b)(4)(A) in a timely manner. Nothing in the request for recalculation should be construed as providing an alternative time frame for commencing a civil action under 35 U.S.C. 154(b)(4)(A).

Any questions concerning this decision should be directed to the Office of Patent Legal Administration at 571-272-7702.

UNITED STATES PATENT AND TRADEMARK OFFICE

Commissioner for Patents
United States Patent and Trademark Office
P.O. Box 1450
Alexandria, VA 22313-1450
www.uspto.gov

RICHARD KWIECIENSKI
10 FIG CT. W.
HOMOSASSA FL 34446

COPY MAILED

JUN 11 2007

OFFICE OF PETITIONS

In re Application of :
KWIECIENSKI, Richard E. :
Application No. 11/409,744 : DECISION ON PETITION
Filed: April 25, 2006 : TO MAKE SPECIAL UNDER
Attorney Docket No. : 37 CFR 1.102(c)(1)
:

This is a decision on the petition under 37 CFR 1.102(c)(1), filed April 25, 2006, to make the above-identified application special based on applicant's age as set forth in M.P.E.P. § 708.02, Section IV.

The petition is **GRANTED**.

A grantable petition to make an application special under 37 CFR 1.102(c)(1) and MPEP § 708.02, Section IV: Applicant's Age must be accompanied by evidence showing that at least one of the applicants is 65 years of age, or more, such as a birth certificate or a statement by applicant. No fee is required

The instant petition includes a copy of US Armed Forces Separation papers and the statement of inventor Richard E. Kwiecienski, attesting to his age. Accordingly, the above-identified application has been accorded "special" status.

Telephone inquiries concerning this decision should be directed to the undersigned at 571-272-7253.

All other inquiries concerning either the examination or status of the application should be directed to the Technology Center.

The application is being forwarded to the Technology Center Art Unit 3781 for action on the merits commensurate with this decision.

Monica A. Graves
Petitions Examiner
Office of Petitions

UNITED STATES PATENT AND TRADEMARK OFFICE

UNITED STATES DEPARTMENT OF COMMERCE
United States Patent and Trademark Office
Address: COMMISSIONER FOR PATENTS
P.O. Box 1450
Alexandria, Virginia 22313-1450
www.uspto.gov

TAROLLI, SUNDHEIM, COVELL & TUMMINO L.L.P.
1300 EAST NINTH STREET, SUITE 1700
CLEVELAND, OH 44114

Mail Date: 04/27/2010

Applicant	: John H. D. LaMarche II	: DECISION ON REQUEST FOR
Patent Number	: 7610864	: RECALCULATION of PATENT
Issue Date	: 11/03/2009	: TERM ADJUSTMENT IN VIEW
Application No	: 11/409,757	: OF WYETH AND NOTICE OF INTENT TO
Filed	: 04/24/2006	: ISSUE CERTIFICATE OF CORRECTION
		:

The Request for Recalculation is **GRANTED** to the extent indicated.

The patent term adjustment has been determined to be **0** days. The USPTO will *sua sponte* issue a certificate of correction reflecting the amount of PTA days determined by the recalculation.

Prior to the issuance of the certificate of correction, the USPTO will afford patentee an opportunity to be heard and request reconsideration. Accordingly, patentee has **one month or thirty (30) days**, whichever is longer, to file a request for reconsideration of this patent term adjustment calculation. See 35 U.S.C. 154(b)(3)(B)(ii) and 37 CFR 1.322(a)(4). No extensions of time will be granted under 37 CFR 1.136.

Patentee should use document code PET.OP if electronically filing a request for reconsideration of this patent term adjustment calculation. The patentee must also include the information required by 37 CFR 1.705(b)(2) and the fee required by 37 CFR 1.18(e). If patentee does not file a timely request for reconsideration of this patent term adjustment calculation including the information required by 37 CFR 1.705(b)(2) and the fee required by 37 CFR 1.18(e), the USPTO will issue a certificate of correction reflecting the PTA determination noted above.

Patentee should be aware that in order to preserve the right to review in the United States District Court for the District of Columbia of the USPTO patent term adjustment determination, patentee must ensure that he or she also take the steps required under 35 U.S.C. 154(b)(4)(A) in a timely manner. Nothing in the request for recalculation should be construed as providing an alternative time frame for commencing a civil action under 35 U.S.C. 154(b)(4)(A).

Any questions concerning this decision should be directed to the Office of Patent Legal Administration at 571-272-7702.

UNITED STATES PATENT AND TRADEMARK OFFICE

Commissioner for Patents
United States Patent and Trademark Office
P.O. Box 1450
Alexandria, VA 22313-1450
www.uspto.gov

Alfred W. Froebrich, Esq.
Cohen, Pontani, Lieberman & Pavane
Suite 1210
551 Fifth Avenue
New York, NY 10176

MAILED
FROM DIRECTORS OFFICE

AUG 30 2006

TECHNOLOGY CENTER 3600

In re application of : **DECISION ON PETITION**
Guillermo Bodnar : **TO MAKE SPECIAL**
Application No. 11/409,758 : **(ACCELERATED**
Filed: April 24, 2006 : **EXAMINATION)**
For: METHOD AND SYSTEM FOR FACILITATING :
TRADING OF DIGITAL MEDIA SPACE :

This is in response to the petition filed on June 13, 2006 to make the above-identified application special on the basis of special examining procedure for certain new applications - accelerated examination as set forth in MPEP § 708.02 VIII.

The requirements for granting special status under this section are: (A) a petition to make special accompanied by the fee set forth in 37 CFR 1.17(i); (B) all claims being directed to a single invention, or an election without traverse if the Office determines that all the claims are not directed to a single invention; (C) a statement that a pre-examination search was made listing the field of search; (D) one copy of each of the references deemed most closely related to the subject matter encompassed by the claims if said references are not already of record; and (E) a detailed discussion of how the claimed subject matter is patentable over the references in accordance with 37 CFR 1.111 (b) and (c).

Since all of the requirements for special status under MPEP § 708.02 VIII have been met, the petition is **GRANTED**.

The examiner is directed (1) to make an interference search for possible interfering applications, (2) to promptly examine this application out of turn, and (3) if any interfering application is discovered, to examine such application simultaneously and state in the first official letter of such application that it is being taken out of turn because of a possible interference.

Petitioner is advised that this application will continue to be special, throughout its entire prosecution and pendency, including interference or appeal, if any, only if petitioner makes a prompt ***bona fide*** effort, in response to each Office action, to place the application in condition for allowance, even if it is necessary to conduct an interview with the examiner to accomplish this purpose.

SUMMARY: Petition to Make Special **GRANTED.**

Randolph A. Reese
Special Programs Examiner
Technology Center 3600
571-272-6619

RAR/dew: 08/14/06

UNITED STATES PATENT AND TRADEMARK OFFICE

Commissioner for Patents
United States Patent and Trademark Office
P.O. Box 1450
Alexandria, VA 22313-1450
www.uspto.gov

MEDTRONIC
Attn: Noreen Johnson - IP Legal Department
2600 Sofamor Danek Drive
MEMPHIS TN 38132

8/13/09

In re Application of:
Rezach, Alan
Serial No.: 11/409,773
Filed: April 24, 2006
Docket: 4002-3791/P24969.00
Title: CONNECTOR APPARATUS

DECISION ON PETITION

This is a decision on the petition filed on August 10, 2009 seeking withdrawal of the finality of the Office action mailed June 22, 2009. This petition is being considered pursuant to 37 CFR §1.181. No fee is required.

The petition is granted.

It is noted that the record shows that claim 4 was amended in independent form without adding other limitations in the Rule 1.111 amendment filed on March 13, 2009. Therefore, the rejection of at least claim 4 under the second paragraph of 35 USC 112 was not necessitated by the amendment filed on March 13, 2009. As such, the finality of the Office actions issued on June 22, 2009 is premature and thus the finality of the action is hereby withdrawn. The Office action mailed on June 22, 2009 will be designated as non-final Office action. The period to respond to the Office action of June 22, 2009 remains unchanged. Since the finality is being withdrawn, an amendment responding to the Office action will be treated as a 37 CFR § 1.111 amendment.

In finding petitioner's points of argument persuasive, the requested relief is granted. The finality of the last Office action mailed June 24, 2009 is hereby withdrawn. The requested relief is granted.

Any questions regarding this decision should be directed to Special Program Examiner, Henry Yuen, at 571-272-4856.

PETITION GRANTED.

Donald T. Hajec, Director
Technology Center 3700

UNITED STATES PATENT AND TRADEMARK OFFICE

UNITED STATES DEPARTMENT OF COMMERCE
United States Patent and Trademark Office
Address: COMMISSIONER FOR PATENTS
P.O. Box 1450
Alexandria, Virginia 22313-1450
www.uspto.gov

BROOKS KUSHMAN P.C. /Oracle America/ SUN / STK
1000 TOWN CENTER, TWENTY-SECOND FLOOR
SOUTHFIELD, MI 48075-1238

Mail Date: 06/21/2010

Applicant	: Christophe N. Sigel	: DECISION ON REQUEST FOR
Patent Number	: 7636171	: RECALCULATION of PATENT
Issue Date	: 12/22/2009	: TERM ADJUSTMENT IN VIEW
Application No	: 11/409,781	: OF WYETH AND NOTICE OF INTENT TO
Filed	: 04/24/2006	: ISSUE CERTIFICATE OF CORRECTION
		:

The Request for Recalculation is **GRANTED** to the extent indicated.

The patent term adjustment has been determined to be **912** days. The USPTO will *sua sponte* issue a certificate of correction reflecting the amount of PTA days determined by the recalculation.

Prior to the issuance of the certificate of correction, the USPTO will afford patentee an opportunity to be heard and request reconsideration. Accordingly, patentee has **one month or thirty (30) days**, whichever is longer, to file a request for reconsideration of this patent term adjustment calculation. See 35 U.S.C. 154(b)(3)(B)(ii) and 37 CFR 1.322(a)(4). No extensions of time will be granted under 37 CFR 1.136.

Patentee should use document code PET.OP if electronically filing a request for reconsideration of this patent term adjustment calculation. The patentee must also include the information required by 37 CFR 1.705(b)(2) and the fee required by 37 CFR 1.18(e). If patentee does not file a timely request for reconsideration of this patent term adjustment calculation including the information required by 37 CFR 1.705(b)(2) and the fee required by 37 CFR 1.18(e), the USPTO will issue a certificate of correction reflecting the PTA determination noted above.

Patentee should be aware that in order to preserve the right to review in the United States District Court for the District of Columbia of the USPTO patent term adjustment determination, patentee must ensure that he or she also take the steps required under 35 U.S.C. 154(b)(4)(A) in a timely manner. Nothing in the request for recalculation should be construed as providing an alternative time frame for commencing a civil action under 35 U.S.C. 154(b)(4)(A).

Any questions concerning this decision should be directed to the Office of Patent Legal Administration at 571-272-7702.

UNITED STATES PATENT AND TRADEMARK OFFICE

UNITED STATES DEPARTMENT OF COMMERCE
United States Patent and Trademark Office
Address: COMMISSIONER FOR PATENTS
P.O. Box 1450
Alexandria, Virginia 22313-1450
www.uspto.gov

BANNER & WITCOFF, LTD.
TEN SOUTH WACKER DRIVE
SUITE 3000
CHICAGO, IL 60606

Mail Date: 04/27/2010

Applicant	: Stephen N. Hardy	: DECISION ON REQUEST FOR
Patent Number	: 7628282	: RECALCULATION of PATENT
Issue Date	: 12/08/2009	: TERM ADJUSTMENT IN VIEW
Application No	: 11/409,784	: OF WYETH AND NOTICE OF INTENT TO
Filed	: 04/24/2006	: ISSUE CERTIFICATE OF CORRECTION
		:

The Request for Recalculation is **GRANTED** to the extent indicated.

The patent term adjustment has been determined to be **631** days. The USPTO will *sua sponte* issue a certificate of correction reflecting the amount of PTA days determined by the recalculation.

Prior to the issuance of the certificate of correction, the USPTO will afford patentee an opportunity to be heard and request reconsideration. Accordingly, patentee has **one month or thirty (30) days**, whichever is longer, to file a request for reconsideration of this patent term adjustment calculation. See 35 U.S.C. 154(b)(3)(B)(ii) and 37 CFR 1.322(a)(4). No extensions of time will be granted under 37 CFR 1.136.

Patentee should use document code PET.OP if electronically filing a request for reconsideration of this patent term adjustment calculation. The patentee must also include the information required by 37 CFR 1.705(b)(2) and the fee required by 37 CFR 1.18(e). If patentee does not file a timely request for reconsideration of this patent term adjustment calculation including the information required by 37 CFR 1.705(b)(2) and the fee required by 37 CFR 1.18(e), the USPTO will issue a certificate of correction reflecting the PTA determination noted above.

Patentee should be aware that in order to preserve the right to review in the United States District Court for the District of Columbia of the USPTO patent term adjustment determination, patentee must ensure that he or she also take the steps required under 35 U.S.C. 154(b)(4)(A) in a timely manner. Nothing in the request for recalculation should be construed as providing an alternative time frame for commencing a civil action under 35 U.S.C. 154(b)(4)(A).

Any questions concerning this decision should be directed to the Office of Patent Legal Administration at 571-272-7702.

UNITED STATES PATENT AND TRADEMARK OFFICE

UNITED STATES DEPARTMENT OF COMMERCE
United States Patent and Trademark Office
Address: COMMISSIONER FOR PATENTS
P.O. Box 1450
Alexandria, Virginia 22313-1450
www.uspto.gov

JOHN S. BEULICK (17851)
ARMSTRONG TEASDALE LLP
ONE METROPOLITAN SQUARE, SUITE 2600
ST. LOUIS, MO 63102-2740

Mail Date: 04/20/2010

Applicant	: David Martin Johnson	: DECISION ON REQUEST FOR
Patent Number	: 7571611	: RECALCULATION of PATENT
Issue Date	: 08/11/2009	: TERM ADJUSTMENT IN VIEW
Appliction No	: 11/409,807	: OF WYETH AND NOTICE OF INTENT TO
Filed	: 04/24/2006	: ISSUE CERTIFICATE OF CORRECTION
		:

The Request for Recalculation is **GRANTED** to the extent indicated.

The patent term adjustment has been determined to be **480** days. The USPTO will *sua sponte* issue a certificate of correction reflecting the amount of PTA days determined by the recalculation.

Prior to the issuance of the certificate of correction, the USPTO will afford patentee an opportunity to be heard and request reconsideration. Accordingly, patentee has **one month or thirty (30) days**, whichever is longer, to file a request for reconsideration of this patent term adjustment calculation. See 35 U.S.C. 154(b)(3)(B)(ii) and 37 CFR 1.322(a)(4). No extensions of time will be granted under 37 CFR 1.136.

Patentee should use document code PET.OP if electronically filing a request for reconsideration of this patent term adjustment calculation. The patentee must also include the information required by 37 CFR 1.705(b)(2) and the fee required by 37 CFR 1.18(e). If patentee does not file a timely request for reconsideration of this patent term adjustment calculation including the information required by 37 CFR 1.705(b)(2) and the fee required by 37 CFR 1.18(e), the USPTO will issue a certificate of correction reflecting the PTA determination noted above.

Patentee should be aware that in order to preserve the right to review in the United States District Court for the District of Columbia of the USPTO patent term adjustment determination, patentee must ensure that he or she also take the steps required under 35 U.S.C. 154(b)(4)(A) in a timely manner. Nothing in the request for recalculation should be construed as providing an alternative time frame for commencing a civil action under 35 U.S.C. 154(b)(4)(A).

Any questions concerning this decision should be directed to the Office of Patent Legal Administration at 571-272-7702.

UNITED STATES PATENT AND TRADEMARK OFFICE

Commissioner for Patents
United States Patent and Trademark Office
P.O. Box 1450
Alexandria, VA 22313-1450
www.uspto.gov

NORRIS MCLAUGHLIN & MARCUS, P.A.
721 ROUTE 202-206
P.O.BOX 5933
BRIDGEWATER, NJ 08807-5933

MAILED

APR 26 2010

OFFICE OF PETITIONS

In re Application of

James D. Ralph, et al.
Application No. 11/409,816
Filed: April 24, 2006
Attorney Docket No. 104084-017

DECISION ON PETITION
TO MAKE SPECIAL UNDER
37 CFR 1.102(c)(1)

This is a decision on the petition under 37 CFR 1.102(c)(1), filed February 9, 2010, to make the above-identified application special based on applicant's age as set forth in M.P.E.P. § 708.02, Section IV.

The petition is **GRANTED**.

A grantable petition to make an application special under 37 CFR 1.102(c)(1) and MPEP § 708.02, Section IV: Applicant's Age must be accompanied by evidence showing that at least one of the applicants is 65 years of age, or more, such as a birth certificate or a statement by applicant. No fee is required

The instant petition includes a statement from applicant's representative that he is in possession of proof of applicant Thomas Nelson Troxell's age. Accordingly, the above-identified application has been accorded "special" status.

Telephone inquiries concerning this decision should be directed to undersigned at 571-272-1642.

All other inquiries concerning either the examination or status of the application should be directed to the Technology Center.

The application is being forwarded to the Technology Center Art Unit 3775 for action on the merits commensurate with this decision.

/AMW/
April M. Wise
Petitions Examiner
Office of Petitions

UNITED STATES PATENT AND TRADEMARK OFFICE

Commissioner for Patents
United States Patent and Trademark Office
P.O. Box 1450
Alexandria, VA 22313-1450
www.uspto.gov

BACOUSTICS, LLC
5929 BAKER ROAD, SUITE 470
MINNETONKA, MN 55345

MAILED

MAY 14 2009

OFFICE OF PETITIONS

In re Application of
Eilaz **BABAEV**
Application No. 11/409,818
Filed: April 24, 2006
Attorney Docket No.

DECISION ON PETITION
UNDER 37 CFR 1.137(b)

This is a decision on the petition, filed June 6, 2007, which is being treated as a petition under 37 CFR 1.137(b) to revive the instant nonprovisional application for failure to timely notify the U.S. Patent and Trademark (USPTO) of the filing of an application in a foreign country, or under a multinational treaty that requires publication of applications eighteen months after filing. *See* 37 CFR 1.137(f).

The petition is **GRANTED**.

Petitioner states that the instant nonprovisional application is the subject of an application filed in an eighteen-month publication country on March 10, 2007. However, the USPTO was unintentionally not notified of this filing within 45 days subsequent to the filing of the subject application in an eighteen-month publication country.

In view of the above, this application became abandoned pursuant to 35 U.S.C. § 122(b)(2)(B)(iii) and 37 CFR 1.213(c) for failure to timely notify the Office of the filing of an application in a foreign country or under a multilateral international agreement that requires publication of applications 18 months after filing.

A petition to revive an application abandoned pursuant to 35 U.S.C. 122(b)(2)(B)(iii) for failure to notify the USPTO of a foreign filing must be accompanied by:

(1) the required reply which is met by the notification of such filing in a foreign country or under a multinational treaty;
(2) the petition fee as set forth in 37 CFR 1.17(m); and
(3) a statement that the entire delay in filing the required reply from the due date of the reply until the filing of a grantable petition was unintentional.

The instant petition has been found to be in compliance with 37 CFR 1.137(b). Accordingly, the failure to timely notify the USPTO of a foreign or international filing within 45 days after the date of filing of such foreign or international application as provided by 35 U.S.C. § 122(b)(2)(B)(iii) and 37 CFR 1.213(c) is accepted as having been unintentionally delayed.

37 CFR 1.137(b)(3) requires a statement that "the entire delay in filing the notice of a foreign or international filing from the due date for the required notice until the filing of a grantable petition pursuant to 37 CFR 1.137(b) was unintentional."

Since the statement appearing in the petition varies from the language required by 37 CFR 1.137(b)(3), the statement is being construed as the required statement. Petitioner must notify the Office if this is **not** a correct reading of the statement appearing in the petition.

The previous Request and Certification under 35 U.S.C. § 122(b)(2)(B)(i) has been rescinded. A Notice Regarding Rescission of Nonpublication Request which sets forth the projected publication date of June 18, 2009 accompanies this decision on petition.

Telephone inquiries concerning this decision should be directed to Monica A. Graves at (571) 272-7253.

This application is being forwarded to Technology Center Art Unit 1618 for examination in due course.

Brian W. Brown
Petitions Examiner
Office of Petitions

ATTACHMENT: Notice Regarding Rescission of Nonpublication Request

UNITED STATES PATENT AND TRADEMARK OFFICE

UNITED STATES DEPARTMENT OF COMMERCE
United States Patent and Trademark Office
Address: COMMISSIONER FOR PATENTS
PO Box 1450
Alexandria, Virginia 22313-1450
www.uspto.gov

APPLICATION NUMBER	FILING OR 371(C) DATE	FIRST NAMED APPLICANT	ATTY. DOCKET NO./TITLE
11/409,818	04/24/2006	Eilaz Babaev	

CONFIRMATION NO. 3733

61008
Bacoustics, LLC
5929 BAKER ROAD
SUITE 470
MINNETONKA, MN 55345

NONPUBLICATION RESCISSION LETTER

Date Mailed: 03/12/2009

Communication Regarding Rescission Of Nonpublication Request and/or Notice of Foreign Filing

Applicant's rescission of the previously-filed nonpublication request and/or notice of foreign filing is acknowledged. The paper has been reflected in the Patent and Trademark Office's (USPTO's) computer records so that the earliest possible projected publication date can be assigned.

The projected publication date is 06/18/2009.

If applicant rescinded the nonpublication request before or on the date of "foreign filing,"[1] then no notice of foreign filing is required.

If applicant foreign filed the application after filing the above application and before filing the rescission, and the rescission did not also include a notice of foreign filing, then a notice of foreign filing (not merely a rescission) is required to be filed within 45 days of the date of foreign filing. See 35 U.S.C. § 122(b)(2)(B)(iii), and Clarification of the United States Patent and Trademark Office's Interpretation of the Provisions of 35 U.S.C. § 122(b)(2)(B)(ii)-(iv), 1272 Off. Gaz. Pat. Office 22 (July 1, 2003).

If a notice of foreign filing is required and is not filed within 45 days of the date of foreign filing, then the application becomes abandoned pursuant to 35 U.S.C. § 122(b)(2)(B)(iii). In this situation, applicant should either file a petition to revive or notify the Office that the application is abandoned. See 37 CFR 1.137(f). Any such petition to revive will be forwarded to the Office of Petitions for a decision. Note that the filing of the petition will not operate to stay any period of reply that may be running against the application.

Questions regarding petitions to revive should be directed to the Office of Petitions at (571) 272-3282.

[1] Note, for purpose of this notice, that "foreign filing" means "filing an application directed to the same invention in another country, or under a multilateral international agreement, that requires publication of applications 18 months after filing".

/magraves/

Office of Data Management, Application Assistance Unit (571) 272-4000, or (571) 272-4200, or 1-888-786-0101

UNITED STATES PATENT AND TRADEMARK OFFICE

UNITED STATES DEPARTMENT OF COMMERCE
United States Patent and Trademark Office
Address: COMMISSIONER FOR PATENTS
P.O. Box 1450
Alexandria, Virginia 22313-1450
www.uspto.gov

APPLICATION NO.	FILING DATE	FIRST NAMED INVENTOR	ATTORNEY DOCKET NO.	CONFIRMATION NO.
11/409,823	04/24/2006	Alan Rezach	P24972.00/MSDI-1050	3730

52196 7590 01/19/2010

MEDTRONIC
Attn: Noreen Johnson - IP Legal Department
2600 Sofamor Danek Drive
MEMPHIS, TN 38132

EXAMINER
HARVEY, JULIANNA NANCY

ART UNIT	PAPER NUMBER
3733	

MAIL DATE	DELIVERY MODE
01/19/2010	PAPER

Please find below and/or attached an Office communication concerning this application or proceeding.

The time period for reply, if any, is set in the attached communication.

UNITED STATES PATENT AND TRADEMARK OFFICE

Commissioner for Patents
United States Patent and Trademark Office
P.O. Box 1450
Alexandria, VA 22313-1450
www.uspto.gov

MEDTRONIC
Attn: Noreen Johnson - IP Legal Department
2600 Sofamor Danek Drive
MEMPHIS TN 38132

In re Application of:	
REZACH, ALAN	
Serial No.: 11/409,823	DECISION ON PETITION
Filed: April 24, 2006	
Docket: P24972.00/MSDI-1050	
Title: CONNECTOR APPARATUS	

This is a decision on the petition filed on January 12, 2010 seeking withdrawal of the finality of the Office action mailed November 25, 2009. This petition is being considered pursuant to 37 CFR §1.181. No fee is required.

The petition is granted.

It is noted that the record shows that at least claim 4 was not substantively amended in the amendment filed on July 20, 2009. Therefore, the rejection of at least claim 4 was not necessitated by the amendment filed on July 20, 2009. As such, the finality of the Office action issued on November 25, 2009 is premature and thus the finality of the action is hereby withdrawn. The Office action mailed on November 25, 2009 will be designated as non-final Office action. The period to respond to the Office action of November 25, 2009 remains unchanged. Since the finality is being withdrawn, an amendment responding to the Office action will be treated as a 37 CFR § 1.111 amendment.

In finding petitioner's points of argument persuasive, the requested relief is granted. The finality of the last Office action mailed November 25, 2009 is hereby withdrawn. The requested relief is granted.

Any questions regarding this decision should be directed to Special Program Examiner, Henry Yuen, at 571-272-4856.

PETITION GRANTED.

for

Donald T. Hajec, Director
Technology Center 3700

UNITED STATES PATENT AND TRADEMARK OFFICE

UNITED STATES DEPARTMENT OF COMMERCE
United States Patent and Trademark Office
Address: COMMISSIONER FOR PATENTS
P.O. Box 1450
Alexandria, Virginia 22313-1450
www.uspto.gov

General Electric Company
GE Global Patent Operation
2 Corporate Drive, Suite 648
Shelton, CT 06484

Mail Date: 04/20/2010

Applicant	: Jean Lienard	: DECISION ON REQUEST FOR
Patent Number	: 7599575	: RECALCULATION of PATENT
Issue Date	: 10/06/2009	: TERM ADJUSTMENT IN VIEW
Appliction No	: 11/409,836	: OF WYETH AND NOTICE OF INTENT TO
Filed	: 04/24/2006	: ISSUE CERTIFICATE OF CORRECTION
		:

The Request for Recalculation is **GRANTED** to the extent indicated.

The patent term adjustment has been determined to be **744** days. The USPTO will *sua sponte* issue a certificate of correction reflecting the amount of PTA days determined by the recalculation.

Prior to the issuance of the certificate of correction, the USPTO will afford patentee an opportunity to be heard and request reconsideration. Accordingly, patentee has **one month or thirty (30) days**, whichever is longer, to file a request for reconsideration of this patent term adjustment calculation. See 35 U.S.C. 154(b)(3)(B)(ii) and 37 CFR 1.322(a)(4). No extensions of time will be granted under 37 CFR 1.136.

Patentee should use document code PET.OP if electronically filing a request for reconsideration of this patent term adjustment calculation. The patentee must also include the information required by 37 CFR 1.705(b)(2) and the fee required by 37 CFR 1.18(e). If patentee does not file a timely request for reconsideration of this patent term adjustment calculation including the information required by 37 CFR 1.705(b)(2) and the fee required by 37 CFR 1.18(e), the USPTO will issue a certificate of correction reflecting the PTA determination noted above.

Patentee should be aware that in order to preserve the right to review in the United States District Court for the District of Columbia of the USPTO patent term adjustment determination, patentee must ensure that he or she also take the steps required under 35 U.S.C. 154(b)(4)(A) in a timely manner. Nothing in the request for recalculation should be construed as providing an alternative time frame for commencing a civil action under 35 U.S.C. 154(b)(4)(A).

Any questions concerning this decision should be directed to the Office of Patent Legal Administration at 571-272-7702.

UNITED STATES PATENT AND TRADEMARK OFFICE

COMMISSIONER FOR PATENTS
UNITED STATES PATENT AND TRADEMARK OFFICE
P.O. BOX 1450
ALEXANDRIA, VA 22313-1450
www.uspto.gov

Paper No.

HEWLETT PACKARD COMPANY
P O BOX 272400, 3404 E. HARMONY ROAD
INTELLECTUAL PROPERTY ADMINISTRATION
FORT COLLINS, CO 80527-2400

COPY MAILED
SEP 2 0 2006
OFFICE OF PETITIONS

In re Application of :
Belady et al. : DECISION ON PETITION
Application No. 11/409,853 :
Filed: April 24, 2006 :
Atty Docket No. 200504319-1 :

This is a decision on the Petition filed July 10, 2006, which is properly considered as a petition under § 1.53(e)(2). Petitioners request that the Office accord the above-identified application a filing date of April 24, 2006, with figure 13 considered part of the original application disclosure.

Application papers in the above-identified application were deposited on April 24, 2006. However, on May 19, 2006, the Initial Patent Examination Division mailed applicants a NOTICE OF OMITTED ITEMS IN A NONPROVISIONAL APPLICATION. Applicants were thereby notified that the application papers had been accorded a filing date; however, figure 13 appeared to have been omitted from the application.

In response, applicants filed the instant petition (and petition fee). Applicants contend that Page 13 was in fact deposited in the U.S. Patent Office with the nonprovisional application papers. As evidence of this, applicants submitted a copy of a return-receipt postcard. Accompanying the petition is a copy of page 13.

A postcard receipt, which itemizes and properly identifies the items, which are being filed, serves as *prima facie* evidence of receipt in the Office of all items listed thereon on the date stamped thereon by the Office. See MPEP 503. A review of petitioners' postcard receipt reveals that: 1) it was date stamped as received in the USPTO on April 24, 2006, and the items filed therewith were assigned Application No. 11/409853; 2) it specifically identifies the items being filed, including "Specification and claims (20 pages)" and 3) it lacks any annotation of non-receipt of any item denoted on the postcard. Thus, petitioners have shown that the items denoted, including

the 20 pages of Specification and claims, were filed on April 24, 2006.

The application papers already considered received in the Office on April 24, 2006, were reviewed along with page 13 of the specification submitted on petition. These papers together constitute the items described on the postcard receipt as "Specification and claims (20 pages)." It is concluded that petitioner has shown that page 13 was among the items present in the application on the date of deposit and should be included in the original application disclosure.

The petition implies that page 13 of the Specification is a copy of the page as originally submitted on April 24, 2006. (Otherwise, the petition would not be granted). Accordingly, petitioner must advise the Office if page 13 supplied on petition is not a copy of the page as originally filed.

Accordingly, the petition is **GRANTED**.

Given the basis for granting the petition, the petition fee is being refunded. The refund will be processed by the Finance Department.

The application is being forwarded to the Office of Initial Patent Examination (OIPE) for:

- further processing with a filing date of April 24, 2006, using the application papers received in the Office and presently accorded that date; and page 13 of the specification re-supplied on petition filed July 10, 2006.

Applicants will receive appropriate notifications regarding the fees owed, if any, and other information in due course from OIPE.

Telephone inquiries related to this decision should be directed to the undersigned at 571-272-3219.

Nancy Johnson
Senior Petitions Attorney
Office of Petitions

UNITED STATES PATENT AND TRADEMARK OFFICE

UNITED STATES DEPARTMENT OF COMMERCE
United States Patent and Trademark Office
Address: COMMISSIONER FOR PATENTS
P.O. Box 1450
Alexandria, Virginia 22313-1450
www.uspto.gov

Qisda Corporation
157 Shan-Ying Road
Gueishan
Taoyuan, 333
TAIWAN

Mail Date: 05/24/2010

Applicant	: Yan-Cheng Chang	: DECISION ON REQUEST FOR
Patent Number	: 7627308	: RECALCULATION of PATENT
Issue Date	: 12/01/2009	: TERM ADJUSTMENT IN VIEW
Application No	: 11/409,859	: OF WYETH AND NOTICE OF INTENT TO
Filed	: 04/24/2006	: ISSUE CERTIFICATE OF CORRECTION
		:

The Request for Recalculation is **GRANTED** to the extent indicated.

The patent term adjustment has been determined to be **721** days. The USPTO will *sua sponte* issue a certificate of correction reflecting the amount of PTA days determined by the recalculation.

Prior to the issuance of the certificate of correction, the USPTO will afford patentee an opportunity to be heard and request reconsideration. Accordingly, patentee has **one month or thirty (30) days**, whichever is longer, to file a request for reconsideration of this patent term adjustment calculation. See 35 U.S.C. 154(b)(3)(B)(ii) and 37 CFR 1.322(a)(4). No extensions of time will be granted under 37 CFR 1.136.

Patentee should use document code PET.OP if electronically filing a request for reconsideration of this patent term adjustment calculation. The patentee must also include the information required by 37 CFR 1.705(b)(2) and the fee required by 37 CFR 1.18(e). If patentee does not file a timely request for reconsideration of this patent term adjustment calculation including the information required by 37 CFR 1.705(b)(2) and the fee required by 37 CFR 1.18(e), the USPTO will issue a certificate of correction reflecting the PTA determination noted above.

Patentee should be aware that in order to preserve the right to review in the United States District Court for the District of Columbia of the USPTO patent term adjustment determination, patentee must ensure that he or she also take the steps required under 35 U.S.C. 154(b)(4)(A) in a timely manner. Nothing in the request for recalculation should be construed as providing an alternative time frame for commencing a civil action under 35 U.S.C. 154(b)(4)(A).

Any questions concerning this decision should be directed to the Office of Patent Legal Administration at 571-272-7702.

UNITED STATES PATENT AND TRADEMARK OFFICE

Commissioner for Patents
United States Patent and Trademark Office
P.O. Box 1450
Alexandria, VA 22313-1450
www.uspto.gov

CESARI AND MCKENNA, LLP
88 BLACK FALCON AVENUE
BOSTON MA 02210

COPY MAILED

MAY 09 2008

OFFICE OF PETITIONS

In re Application of

Friedrich Hoffman

Application No. 11/409,876

Filed: April 24, 2006

Attorney Docket No. 015804-0157

DECISION ON PETITION

This is a decision on the petition under 37 CFR §1.137(b), March 5, 2008, to revive the above-identified application.

The petition is **granted**.

This application became abandoned for failure to timely remit the issue fee of $1,440.00 and the publication fee of $300.00 as required by the Notice of Allowance and Issue Fee Due (the "Notice") mailed September 28, 2007. The Notice set forth a three (3) month statutory period for reply. No response was received within the allowable period. Accordingly, this application became abandoned on December 29, 2007. A Notice of Abandonment was mailed March 5, 2008.

The issue fee, publication fee, and Form PTOL-85-b were received on March 5, 2008.

The application is being forwarded to the Office of Data Management for further processing.

Telephone inquiries concerning this matter may be directed to the undersigned at (571) 272-3222.

Kenya A. McLaughlin
Petitions Attorney
Office of Petitions

UNITED STATES PATENT AND TRADEMARK OFFICE

Commissioner for Patents
United States Patent and Trademark Office
P.O. Box 1450
Alexandria, VA 22313-1450
www.uspto.gov

Date: 07/28/08

Patent No. : 7383739 B2
Ser. No. : 11/409,876
Inventor(s) : HOFMANN, FRIEDRICH
Issued : 06/10/08
Title : **MAGNETOINDUCTIVE FLOWMETER HAVING AN ELECTRODE WITH AN ELECTROCONDUCTIVE DIAMOND COATING**
Docket No. : **015804-0157**

Re: Request for Certificate of Correction

Consideration has been given your request for the issuance of a certificate of correction for the above-identified patent under the provisions of Rule(s) 1.322 and/or 1.323.

Assignees' names and addresses (assignment data) printed in a patent, are based *solely* on information supplied in the appropriate space for identifying the assignment data, i.e., item 3 of the Issue Fee Transmittal Form PTOL-85B. Granting of a request under 37 CFR 3.81(b) is required to correct applicant's error providing ***incorrect or erroneous*** assignment data, *before* issuance of a Certificate of Correction, under 37 CFR 1.323 *(see Manual of Patent Examining Procedures (M.P.E.P) Chp.1400, sect. 1481).* This procedure is required *at any time after the issue fee is paid*, including after issuance of the patent.

In view of the foregoing, your request, in this mater, is hereby denied.

A request to correct the Assignee under 37 CFR 3.81(b) should include:

A. **the processing fee set forth in 37 CFR 1.117(h) (currently $130);**
B. a statement that the failure to include the correct assignee name on the PTOL-85B was inadvertent; and
C. a copy of the Notice of Recordation of Assignment Document, reflecting the reel and frame number where the assignment(s) is recorded and/or reflecting proof of *the date* the assignment was submitted for recordation.

In the Request, Applicant(s) may request that the file be forwarded to Certificates of Correction Branch, for issuance of a Certificate of Correction, if the Request is granted.

Any request under 37 CFR 3.81(b) should be directed to the following address or facsimile number:

By mail: Mail Stop PETITIONS

Commissioner for Patents
Post Office Box 1450
Alexandria, VA 22313-1450

By hand:
Customer Service Window
Mail Stop Petitions
Randolph Building
401 Dulany Street
Alexandria, VA 22314

By fax:
(571) 273-0025
ATTN: Office of Petitions

If a fee (currently $100) was previously submitted for consideration of a Request for Certificate of Correction, under CFR 1.323, to correct assignment data, no additional fee is required.

Lamonte M. Newsome
For Mary Diggs, Supervisor
Decisions & Certificates
Of Correction Branch
(703) 305-8309 or (703) 308-9390 #112

CESARI AND MCKENNA, LLP
88 BLACK FALCON AVENUE
BOSTON MA 02210

LMN

UNITED STATES PATENT AND TRADEMARK OFFICE

Commissioner for Patents
United States Patent and Trademark Office
P.O. Box 1450
Alexandria, VA 22313-1450
www.uspto.gov

COPY MAILED

OCT 10 2008

OFFICE OF PETITIONS

CESARI AND MCKENNA LLP
88 BLACK FALCON AVENUE
BOSTON MA 02210

In re Patent No. 7,383,739 :
Issue Date: June 10, 2008 :
Application No. 11/409,876 : DECISION ON PETITION
Filed: April 24, 2006 :
Attorney Docket No. 015804-0157 :

This is a decision on the "REQUEST UNDER 37 C.F.R. 3.81(b)", filed July 14, 2008.

The petition is **GRANTED**.

An application may issue in the name of an assignee rather than the applicant if requested prior to issuance of a patent.[1] However, in the event the request is not made prior to issuance, a Certificate of Correction under 37 CFR 1.323 may be requested. A request for a Certificate of Correction under 37 CFR 1.323 to correct the assignee's name will not be granted unless a petition under 37 CFR 3.81(b) is granted. Such request under 37 CFR 3.81(b) should include:

(A) the processing fee required by 37 CFR 1.17(i);

(B) a request for issuance of the application in the name of the assignee, or a request that a patent be corrected to state the name of the assignee;

[1] See 37 CFR 3.81.

(C) a statement that the assignment was submitted for recordation as set forth in 37 CFR 3.11 before issuance of the patent; and

(D) a request for a certificate of correction under 37 CFR 1.323 accompanied by the fee set forth in 37 CFR 1.20(a).[2]

Receipt of the $130 processing fee set forth in 37 CFR 1.17(i) and the $100 fee for the Certificate of Correction is acknowledged.

The file is being forwarded to the Certificate of Corrections Branch for issuance of the requested Certificate of Correction.

Telephone inquiries related to this decision should be directed to the undersigned at (571)272-3207.

Cliff Congo
Petitions Attorney
Office of Petitions

[2] MPEP 307.

UNITED STATES PATENT AND TRADEMARK OFFICE

Commissioner for Patents
United States Patent and Trademark Office
P.O. Box 1450
Alexandria, VA 22313-1450
www.uspto.gov

MYERS BIGEL SIBLEY & SAJOVEC, P.A
PO BOX 37428
RALEIGH NC 27627

COPY MAILED

OCT 14 2008

OFFICE OF PETITIONS

In re Application of:
GAMMON, John Weldon
Application No.: 11/409,889
Filed: April 24, 2006
Attorney Docket No.: 9314-48CT

DECISION APPROVING
WITHDRAWAL OF ATTORNEY

This is a decision on the Request to Withdraw as Attorney/Agent of Record under 37 CFR § 1.36, filed October 2, 2008.

The Request is **APPROVED**.

Debra K. Stephens requests that she alone be withdrawn as an attorney under 37 CFR § 1.36, pursuant to the reason set forth under 37 CFR § 10.40(b)(2), because of her current employment by the United States Patent and Trademark Office. Since the Request satisfies all of the requirements for withdrawal, it is appropriate to approve the Request and withdraw only Ms. Stephens as an attorney of record.

All future communications from the Office will continue to be directed to the above-identified correspondence address.

A courtesy copy of this decision is being mailed to Ms. Stephens at the address identified in the Request.

Telephone inquiries relating to this decision should be directed Brian W. Brown at (571) 272-5338.

Brian W. Brown
Petitions Examiner
Office of Petitions

Cc: Debra K. Stephens
301 Edgemore Avenue
Cary, NC 27519

UNITED STATES PATENT AND TRADEMARK OFFICE

Commissioner for Patents
United States Patent and Trademark Office
P.O. Box 1450
Alexandria, VA 22313-1450
www.uspto.gov

caf

Mailed: 9-4-07

In re Application of
William B. Kerfoot
Serial No. 11/409,892
Filed: April 24, 2006
For: GROUNDWATER AND SUBSURFACE REMEDIATION

: DECISION ON
: PETITION

This is a decision on the PETITION FROM RESTRICTION REQUIREMENT MADE IN OFFICE ACTION OF JULY 31, 2006 under 37 CFR 1.181.

On July 31, 2006, a two way restriction requirement was made by the examiner. The examiner took the position that the groupings of claims were related as process and apparatus for its practice. Applicants traversed the restriction requirement in a response filed January 3, 2007. The examiner repeated the restriction requirement in an office action mailed March 16, 2007 and made the restriction requirement final. On July 16, 2007, the instant petition under 37 CFR 1.181 was filed to formally request the withdrawal of the restriction requirement.

Applicant's position for the withdrawal of the restriction requirement is that:
(1) the examiner must show the separate groups are "independent **and** distinct", rather than "independent **or** distinct"; and
(2) applicant contends that the inventions of Group I and II are neither independent nor distinct.

DECISION

Sections 802.01, 803 and 806.05(c) of the MPEP state:

802.01 [R-5] Meaning of "Independent" and "Distinct"
35 U.S.C. 121 quoted in the preceding section states that the Director may require restriction if two or more "independent and distinct" inventions are claimed in one application. In 37 CFR 1.141, the statement is made that two or more "independent and distinct inventions" may not be claimed in one application.

This raises the question of the inventions as between which the Director may require restriction. This, in turn, depends on the construction of the expression "independent and distinct" inventions.

"Independent", of course, means not dependent>, or unrelated<. If "distinct" means the same thing, then its use in the statute and in the rule is redundant. If "distinct" means something different, then the question arises as to what the difference in meaning between these two words may be. The hearings before the committees of Congress considering the codification of the patent laws indicate that 35 U.S.C. 121: "enacts as law existing practice with respect to division, at the same time introducing a number of changes."

The report on the hearings does not mention as a change that is introduced, the inventions between which the Director may properly require division.

The term "independent" as already pointed out, means not dependent>, or unrelated<. A large number of inventions between which, prior to the 1952 Act, division had been proper, are dependent inventions, such as, for example, combination and a subcombination thereof; as process and apparatus used in the practice of the process; as composition and the process in which the composition is used; as process and the product made by such process, etc. If section 121 of the 1952 Act were intended to direct the Director never to approve division between dependent inventions, the word "independent" would clearly have been used alone. If the Director has authority or discretion to restrict independent inventions only, then restriction would be improper as between dependent inventions, e.g., the examples used for purpose of illustration above. Such was clearly not the intent of Congress. Nothing in the language of the statute and nothing in the hearings of the committees indicate any intent to change the substantive law on this subject. On the contrary, joinder of the term "distinct" with the term "independent", indicates lack of such intent. The law has long been established that dependent inventions (frequently termed related inventions) such as used for illustration above may be properly divided if they are, in fact, "distinct" inventions, even though dependent.

I. INDEPENDENT
The term "independent" (i.e., **>unrelated<) means that there is no disclosed relationship between the two or more inventions claimed, that is, they are unconnected in design, operation, and effect. For example, a process and an apparatus incapable of being used in practicing the process are independent inventions. See also MPEP § 806.06 and§ 808.01.

II. > RELATED BUT< DISTINCT
Two or more inventions are related (i.e., not independent) if they are disclosed as connected in at least one of design (e.g., structure or method of manufacture), operation (e.g., function or method of use), or effect. Examples of related inventions include combination and part (subcombination) thereof, process and apparatus for its practice, process and product made, etc. In this definition the term related is used as an alternative for dependent in referring to inventions other than independent inventions. Related inventions are distinct if the inventions as claimed are not connected in at least one of design, operation, or effect (e.g., can be made by, or used in, a materially different process) and wherein at least one invention is PATENTABLE (novel and nonobvious) OVER THE OTHER (though they may each be unpatentable over the prior art). See MPEP § 806.05(c) (combination and subcombination) and § 806.05(j) (related products or related processes) for examples of when a two-way test is required for distinctness. It is further noted that the terms "independent" and "distinct" are used in decisions with varying meanings. All decisions should be read carefully to determine the meaning intended.

803 Restriction - When Proper
Under the statute an application may properly be required to be restricted to one of two or more claimed inventions only if they are able to support separate patents and they are either independent (MPEP § 806.04 - § 806.04(i)) or distinct (MPEP § 806.05 - § 806.05(j)).

806.05(e) Process and Apparatus for Its Practice — Distinctness
In applications claiming inventions in different statutory categories, only one-way distinctness is generally needed to support a restriction requirement. See MPEP § 806.05(c). Process and apparatus for its practice can be shown to be distinct inventions, if either or both of the following can be shown: (A) that the process as claimed can be practiced by another materially different apparatus or by hand; or (B) that the apparatus as claimed can be used to practice another and materially different process. If the apparatus claims include a claim to "means" for practicing the process, the claim is a linking claim and must be examined with the elected invention. If it is ultimately allowed, rejoinder is required. See MPEP § 809.04.

With respect to applicant's argument that there is a requirement to show that the inventions are independent **and** distinct, it is submitted that MPEP section 802.01 explains why this in not, in

fact, the requirement (see underlined portion above) and MPEP section 803 clearly states that the requirement is that the inventions are independent **or** distinct.

In making the restriction final, the examiner states that the inventions are distinct because the apparatus as claimed can be used to perform another process. The examiner explains that the apparatus could be used in a process to treat wastewater contained within a tank.

Petitioner argues that the material differences argued by the examiner are contrary to the limitations of the apparatus claims. It is argued that claim 11 recites "...disposed in the subsurface water". This argument is not persuasive. It is well settled that method limitations and/or intended use limitations do not distinguish a claimed apparatus over a prior art apparatus. Such a limitation does not impart any structure to the actual apparatus. Because intended use limitations do not have any bearing on the structure claimed, the examiner has in fact drawn a distinction with the apparatus as claimed. Therefore, the restriction is proper.

Accordingly, the petition for withdrawal of the restriction requirement is **DENIED.** The application is being forwarded to the examiner to consider the amendment after final filed July 16, 2007.

Jacqueline M. Stone

Jacqueline M. Stone, Director
Technology Center 1700
Chemical and Materials Engineering

FISH & RICHARDSON PC
P.O. BOX 1022
MINNEAPOLIS MN 55440-1022

UNITED STATES PATENT AND TRADEMARK OFFICE

UNITED STATES DEPARTMENT OF COMMERCE
United States Patent and Trademark Office
Address: COMMISSIONER FOR PATENTS
P.O. Box 1450
Alexandria, Virginia 22313-1450
www.uspto.gov

BIB DATA SHEET

CONFIRMATION NO. 3676

SERIAL NUMBER	FILING or 371(c) DATE RULE	CLASS	GROUP ART UNIT	ATTORNEY DOCKET NO.
11/409,901	04/24/2006	606	4138	MSDI-738/PC402.08

APPLICANTS

Thomas V. McGahan, Germantown, TN;
Steven D. DeRidder, Bartlett, TN;
Eric C. Lange, Germantown, TN;

**** CONTINUING DATA **************************

This application is a DIV of 10/219,040 08/14/2002 PAT 7,033,362
which is a CON of PCT/US01/05500 02/22/2001
which claims benefit of 60/184,107 02/22/2000

**** FOREIGN APPLICATIONS **************************

**** IF REQUIRED, FOREIGN FILING LICENSE GRANTED ****

05/25/2006

Foreign Priority claimed	❑ Yes ☑ No	❑ Met after Allowance	STATE OR COUNTRY	SHEETS DRAWINGS	TOTAL CLAIMS	INDEPENDENT CLAIMS
35 USC 119(a-d) conditions met	❑ Yes ☑ No		TN	41	10	1
Verified and Acknowledged	/CHRISTOPHER J BECCIA/ Examiner's Signature	Initials				

ADDRESS

KRIEG DEVAULT LLP
ONE INDIANA SQUARE, SUITE 2800
INDIANAPOLIS, IN 46204-2709
UNITED STATES

TITLE

Instruments and techniques for disc space preparation

FILING FEE RECEIVED		
1000	FEES: Authority has been given in Paper No._____ to charge/credit DEPOSIT ACCOUNT No._____ for following:	❑ All Fees ❑ 1.16 Fees (Filing) ❑ 1.17 Fees (Processing Ext. of time) ❑ 1.18 Fees (Issue) ❑ Other _____ ❑ Credit

UNITED STATES PATENT AND TRADEMARK OFFICE

UNITED STATES DEPARTMENT OF COMMERCE
United States Patent and Trademark Office
Address: COMMISSIONER FOR PATENTS
P.O. Box 1450
Alexandria, Virginia 22313-1450
www.uspto.gov

Patricia A. Sweeney
1835 Pleasant Street
West Des Moines, IA 50265

Mail Date: 04/21/2010

Applicant	: Bruce M. Held	: DECISION ON REQUEST FOR
Patent Number	: 7626077	: RECALCULATION of PATENT
Issue Date	: 12/01/2009	: TERM ADJUSTMENT IN VIEW
Appliction No	: 11/409,909	: OF WYETH AND NOTICE OF INTENT TO
Filed	: 04/24/2006	: ISSUE CERTIFICATE OF CORRECTION
		:

The Request for Recalculation is **GRANTED** to the extent indicated.

The patent term adjustment has been determined to be **314** days. The USPTO will *sua sponte* issue a certificate of correction reflecting the amount of PTA days determined by the recalculation.

Prior to the issuance of the certificate of correction, the USPTO will afford patentee an opportunity to be heard and request reconsideration. Accordingly, patentee has **one month or thirty (30) days**, whichever is longer, to file a request for reconsideration of this patent term adjustment calculation. See 35 U.S.C. 154(b)(3)(B)(ii) and 37 CFR 1.322(a)(4). No extensions of time will be granted under 37 CFR 1.136.

Patentee should use document code PET.OP if electronically filing a request for reconsideration of this patent term adjustment calculation. The patentee must also include the information required by 37 CFR 1.705(b)(2) and the fee required by 37 CFR 1.18(e). If patentee does not file a timely request for reconsideration of this patent term adjustment calculation including the information required by 37 CFR 1.705(b)(2) and the fee required by 37 CFR 1.18(e), the USPTO will issue a certificate of correction reflecting the PTA determination noted above.

Patentee should be aware that in order to preserve the right to review in the United States District Court for the District of Columbia of the USPTO patent term adjustment determination, patentee must ensure that he or she also take the steps required under 35 U.S.C. 154(b)(4)(A) in a timely manner. Nothing in the request for recalculation should be construed as providing an alternative time frame for commencing a civil action under 35 U.S.C. 154(b)(4)(A).

Any questions concerning this decision should be directed to the Office of Patent Legal Administration at 571-272-7702.

UNITED STATES PATENT AND TRADEMARK OFFICE

Commissioner for Patents
United States Patent and Trademark Office
P.O. Box 1450
Alexandria, VA 22313-1450
www.uspto.gov

Henri Duong
316 1/2 E Glendon way
Alhambra CA 91801

COPY MAILED

JUL 26 2006

OFFICE OF PETITIONS

In re Application of :
Henri Duong :
Application No. 11/409,918 : DECISION ON PETITION
Filed: April 25, 2005 : TO MAKE SPECIAL UNDER
Attorney Docket No. n/a : 37 CFR 1.102(c)(2)
:

This is a decision on the petition under 37 CFR 1.102(c) (2)(ii), filed April 25, 2005, to make the above-identified application special based on the invention materially contributing to the development or conservation of energy resources as set forth in M.P.E.P. § 708.02, Section VI.

The petition is **DISMISSED**.

A grantable petition to make an application special under 37 CFR 1.102(c)(ii) and MPEP § 708.02, Section VI: Energy, must state how the invention materially contributes to (A) the discovery or development of energy resources, or (b) the more efficient utilization and conservation of energy resources. If the disclosure is not clear on its face that the claimed invention materially contributes category (A) or (B), the petition must be accompanied by a statement by the applicant, assignee, or an attorney/agent registered to practice before the Office explaining how the materiality standard is met. Examples of inventions in category (A) would be developments in fossil fuels (natural gas, coal, and petroleum), hydrogen fuel technologies, nuclear energy, solar energy, etc. Category (B) would include inventions relating to the reduction of energy consumption in combustion systems, industrial equipment, household appliances, etc. No fee is required.

The instant petition fails to meet the materiality standard of 37 CFR 102(c)(2)(ii). Although the invention may be directed to inventions relating to the reduction of energy consumption in combustion systems, the materiality standard of the rule has not been met, i.e., petitioner has failed to state how the claimed invention contributes in a significant, substantial, or noticeable manner to inventions relating to the reduction of energy consumption in combustion systems. That the invention may be used, as a means to power vehicles without directly using fossil fuels in the motor/engine do not in itself meet the materiality standard. Accordingly, it is unclear as to how the claimed invention would contribute in a significant manner to the inventions relating to the reduction of energy consumption in combustion systems.

Further correspondence with respect to this matter should be addressed as follows:

By Mail: Mail Stop PETITION
Commissioner for Patents

P. O. Box 1450
Alexandria, VA 22313-1450

By hand: U. S. Patent and Trademark Office
Customer Service Window, Mail Stop Petitions
Randolph Building
401 Dulany Street
Alexandria, VA 22314

By FAX: (571) 273-8300

Telephone inquiries concerning this decision should be directed to David Bucci at 571-272-7099.

All other inquiries concerning either the examination or status of the application should be directed to the Technology Center.

The application is being forwarded to the Technology Center Art Unit 3748 for action in its regular turn.

David Bucci
Petitions Examiner
Office of Petitions

UNITED STATES PATENT AND TRADEMARK OFFICE

Commissioner for Patents
United States Patent and Trademark Office
P.O. Box 1450
Alexandria, VA 22313-1450
www.uspto.gov

Henri Duong
316 1/2 E Glendon way
Alhambra CA 91801

MAILED

MAR 30 2009

OFFICE OF PETITIONS

In re Application of :
Duong :
Application No. 11/409,918 : ON PETITION
Filed: April 25, 2006 :
Attorney Docket No. N/A :
For: ANTI-POLLUTION MOTORS/ENGINES RUN BY AIR/LIQUID/GAS CYCLE, SPRING FORCE, PUMP, ENERGY BLADES

This is a decision on the correspondence filed on February 27, 2009, which is being treated as a feeless petition under 37 CFR 1.181 to withdraw the holding of abandonment in the above-identified application.

The petition under 37 CFR 1.181 is **DISMISSED**.

Any request for reconsideration of this decision must be submitted within TWO (2) MONTHS from the mail date of this decision. Extensions of time under 37 CFR 1.136(a) are permitted. This is **not** final agency action within the meaning of 5 U.S.C. § 704.

A final Office action was mailed on April 11, 2008. An amendment after final was filed on April 24, 2008. The amendment after final failed to place this application in *prima facie* condition for allowance, as was explained in the June 5, 2008 Advisory action. On June 10, 2008, petitioner filed a notice of appeal and required fee. The application became abandoned as a result of petitioner's failure to file an appeal brief (and fee required by 37 CFR 41.20(b)(2)) within the extendable two month time period provided in 37 CFR 41.37(a)(1). A Notice of Abandonment was mailed on February 18, 2009.

Petitioner requests withdrawal of the holding of abandonment because, "Applicant has not been instructed to take any further step besides the ... Advisory Action of 06/05/2008 so this does not sound reasonable to have the applicant punished by having his application abandoned."

Petitioner is informed that the Advisory action of June 5, 2008 did not set any requirements. Petitioner's filing of the Notice of Appeal started a time clock. The application became abandoned because petitioner failed to file a follow-up submission to the June 10, 2008 Notice of Appeal. Per 37 CFR 41.37(a)(1), an appellant must file a brief under within two months from the date of filing the notice of appeal under § 41.31. Per 37 CFR 41.37(a)(2), the brief must be

accompanied by the fee set forth in § 41.20(b)(2). Per 37 CFR 41.37(b), on failure to file the brief, accompanied by the requisite fee, within the period specified in paragraph (a) of this section, the appeal will stand dismissed.

Pursuant to 37 CFR 41.37(e) and 37 CFR 1.136(a), petitioner could purchase up to a five month extension of time from the June 10, 2008 filing of the Notice of Appeal to file a timely Appeal Brief. Petitioner filed his Appeal Brief on December 30, 2008. However, the Appeal Brief was not accompanied by a petition for an extension of time and required fee.

37 CFR 1.136 (the extension of time provision) implements 35 U.S.C. 41(a)(8) which directs the Director of the USPTO to charge fees for extensions of time to take action in patent applications. Thus, extensions of time fees may not be waived. The application became abandoned on August 11, 2008.

The petition under 37 CFR 1.181 to withdraw the holding of abandonment is **dismissed**.

MPEP 1205.01 states that if the time for filing a brief has passed and the application has consequently become abandoned, the applicant may petition to revive the application under 37 CFR 1.137, as in other cases of abandonment.

A delay resulting from the lack of knowledge or improper application of the patent statute, rules of practice or the MPEP does not constitute an "unavoidable" delay. See Haines v. Quigg, 673 F. Supp. 314, 317, 5 USPQ2d 1130, 1132 (N.D. Ind. 1987), Vincent v. Mossinghoff, 230 USPQ 621, 624 (D.D.C. 1985); Smith v. Diamond, 209 USPQ 1091 (D.D.C. 1981); Potter v. Dann, 201 USPQ 574 (D.D.C. 1978); Ex parte Murray, 1891 Dec. Comm'r Pat. 130, 131 (1891).

The undersigned strongly suggests filing a petition stating that the delay was unintentional. Public Law 97-247, § 3, 96 Stat. 317 (1982), which revised patent and trademark fees, amended 35 U.S.C. § 41(a)(7) to provide for the revival of an "unintentionally" abandoned application without a showing that the delay in prosecution or in late payment of an issue fee was "unavoidable." This amendment to 35 U.S.C. § 41(a)(7) has been implemented in 37 CFR 1.137(b).

The filing of a petition under 37 CFR 1.137(b) cannot be intentionally delayed and therefore must be filed promptly. A person seeking revival due to unintentional delay can not make a statement that the delay was unintentional unless the entire delay, including the delay from the date it was discovered that the application was abandoned until the filing of the petition to revive under 37 CFR 1.137(b), was unintentional. A statement that the delay was unintentional is not appropriate if petitioner intentionally delayed the filing of a petition for revival under 37 CFR 1.137(b).

The Rule 137(b) petition fee is $810.00. For petitioner's convenience, a blank copy of the form – PETITION FOR REVIVAL OF AN APPLICATION FOR PATENT ABANDONED UNINTENTIONALLY UNDER 37 CFF 1.137(b) – is enclosed.

Further correspondence with respect to this matter should be addressed as follows:

By mail: Mail Stop PETITION
Commissioner for Patents
Post Office Box 1450
Alexandria, VA 22313-1450

By hand: U.S. Patent and Trademark Office
Customer Service Window, Mail Stop Petition
Randolph Building
401 Dulany Street
Alexandria, VA 22314

By FAX: (571) 273-8300 - ATTN: Office of Petitions

Telephone inquiries may be directed to the undersigned at (571) 272-3230.

Shirene Willis Brantley
Senior Petitions Attorney
Office of Petitions

Enclosure: blank copy of the form – PETITION FOR REVIVAL OF AN APPLICATION FOR PATENT ABANDONED UNINTENTIONALLY UNDER 37 CFF 1.137(b)

Privacy Act Statement

UNITED STATES PATENT AND TRADEMARK OFFICE

Commissioner for Patents
United States Patent and Trademark Office
P.O. Box 1450
Alexandria, VA 22313-1450
www.uspto.gov

Henri Duong
316 1/2 E Glendon way
Alhambra CA 91801

COPY MAILED

MAY 20 2009

OFFICE OF PETITIONS

In re Application of
Duong
Application No. 11/409,918
Filed: April 25, 2006
Attorney Docket No. N/A
For: ANTI-POLLUTION MOTORS/ENGINES RUN BY AIR/LIQUID/GAS CYCLE, SPRING FORCE, PUMP, ENERGY BLADES

ON PETITION

This is a decision on the correspondence filed on April 9, 2009, which is being treated as a renewed petition under 37 CFR 1.181 to withdraw the holding of abandonment in the above-identified application. In addition, the renewed petition requests a refund of the Notice of Appeal fee paid on June 10, 2008 and the Appeal Brief fee paid on December 30, 2008. This request is properly treated under 37 CFR 1.181, as well.

The petition under 37 CFR 1.181 to withdraw the holding of abandonment is **DISMISSED**.

The petition under 37 CFR 1.181 for refund of the Notice of Appeal fee and the Appeal Brief fee is **GRANTED TO THE EXTENT INDICATED HEREIN.**

Any request for reconsideration of this decision must be submitted within TWO (2) MONTHS from the mail date of this decision. Extensions of time under 37 CFR 1.136(a) are permitted. This is **not** final agency action within the meaning of 5 U.S.C. § 704.

A final Office action was mailed on April 11, 2008. An amendment after final was filed on April 24, 2008. The amendment after final failed to place this application in *prima facie* condition for allowance, as was explained in the June 5, 2008 Advisory action. On June 10, 2008, petitioner filed a notice of appeal and required fee. The application became abandoned as a result of petitioner's failure to file an appeal brief (and fee required by 37 CFR 41.20(b)(2)) within the extendable two month time period provided in 37 CFR 41.37(a)(1). A Notice of Abandonment was mailed on February 18, 2009.

The contents of the prior decision on petition, mailed March 30, 2009 is incorporated by reference into the present decision.

Petitioner has provided no new arguments to support his contention that the holding of abandonment should be withdrawn. Petitioner requests that the Office waive any fee for withdrawing the holding of abandonment or revival.

Petitioner is informed that there is no fee associated with the filing of a petition to withdraw the holding of abandonment. The issue here, is that petitioner **cannot** establish that the holding of abandonment should be withdrawn, as the application did become abandoned due to applicant's lack of knowledge of Office rules pertaining to the necessity of obtaining extensions of time.

As to the request that the Office waive any revival fees, petitioner is informed that the payment of the petition fee is a prerequisite to the filing of a petition to revive under 37 CFR 1.137. This requirement cannot be waived. MPEP 711.03(c)(III)(B). Therefore, consideration of the merits of any future filed revival petition under 37 CFR 1.137(a) or (b) before receipt of the petition fee is prohibited.

Once again, the undersigned strongly suggests filing a petition stating that the delay was unintentional. Public Law 97-247, § 3, 96 Stat. 317 (1982), which revised patent and trademark fees, amended 35 U.S.C. § 41(a)(7) to provide for the revival of an "unintentionally" abandoned application without a showing that the delay in prosecution or in late payment of an issue fee was "unavoidable." This amendment to 35 U.S.C. § 41(a)(7) has been implemented in 37 CFR 1.137(b).

The filing of a petition under 37 CFR 1.137(b) cannot be intentionally delayed and therefore must be filed promptly. A person seeking revival due to unintentional delay can not make a statement that the delay was unintentional unless the entire delay, including the delay from the date it was discovered that the application was abandoned until the filing of the petition to revive under 37 CFR 1.137(b), was unintentional. A statement that the delay was unintentional is not appropriate if petitioner intentionally delayed the filing of a petition for revival under 37 CFR 1.137(b). The required Rule 137(b) petition fee is $810.00.

With respect to the request that the Office refund the Notice of Appeal fee and the Appeal Brief fee, petitioner is reminded that the applicable statute, 35 U.S.C. 42(d), authorizes the Commissioner to refund "any fee paid by mistake or any amount paid in excess of that required." Thus the USPTO may refund: (1) a fee paid when no fee is required (*i.e.*, a fee paid by mistake), or (2) any fee paid in excess of the amount of the fee that is required. See Ex Parte Grady, 59 USPQ 276, 277 (Comm'r Pats. 1943) (the statutory authorization for the refund of fees is applicable only to a mistake relating to the fee payment, and not the underlying action). 37 CFR 1.26(a)

The rules of practice are clear that prosecution of an application to save it from abandonment must include such complete and proper action as the condition of the case may require. Petitioner knowingly paid the Notice of Appeal fee. 37 CFR 1.116 and 1.135(b) are clear that proceedings concerning an amendment after final rejection will not operate to avoid abandonment of the application in the absence of a timely and proper appeal. Petitioner was acting as a prudent applicant when he paid the Notice of Appeal fee. Such conscientious patent practice is not a mistake within the meaning of the aforementioned statute and regulation that warrants a refund.

Petitioner is reminded that the word "shall" appears in 35 U.S.C. § 41(a)(6)(A) pertaining to collection of a fee upon the filing of a Notice of Appeal with the PTO. It is well settled that the use of "shall" in a statute is the language of command, and where the directions of a statute are mandatory, then strict compliance with the statutory terms is essential. Farrel Corp. v. U.S. Int'l Trade Comm'n, 942 F.2d 1147, 20 USPQ2d 1912 (Fed. Cir. 1991). That is, it is mandatory that the Commissioner charge, and the applicant pay, the fees specified by statute upon presentation of a request for a service by the PTO. See BEC Pressure Controls Corp. v. Dwyer Instruments, Inc., 380 F.Supp. 1397, 1399, 182 USPQ 190, 192 (N.D. Ind. 1974). The language of the statute does not permit the Commissioner any discretion with respect to charging the fees set forth therein. Id.

The Notice of Appeal fee was properly charged and will not be refunded.

The Appeal Brief fee was paid on December 30, 2008. However, since it was paid after the application was abandoned it will be refunded via credit card.

Further correspondence with respect to this matter should be addressed as follows:

By mail:
Mail Stop PETITION
Commissioner for Patents
Post Office Box 1450
Alexandria, VA 22313-1450

By hand:
U.S. Patent and Trademark Office
Customer Service Window, Mail Stop Petition
Randolph Building
401 Dulany Street
Alexandria, VA 22314

By FAX: (571) 273-8300 - ATTN: Office of Petitions

Telephone inquiries may be directed to the undersigned at (571) 272-3230.

Shirene Willis Brantley

Shirene Willis Brantley
Senior Petitions Attorney
Office of Petitions

UNITED STATES PATENT AND TRADEMARK OFFICE

Commissioner for Patents
United States Patent and Trademark Office
P.O. Box 1450
Alexandria, VA 22313-1450
www.uspto.gov

COPY MAILED

NOV 2 0 2009

OFFICE OF PETITIONS

Henri Duong
316 1/2 E Glendon way
Alhambra CA 91801

In re Application of :
Duong :
Application No. 11/409,918 : ON PETITION
Filed: April 25, 2006 :
Attorney Docket No. N/A :
For: ANTI-POLLUTION MOTORS/ENGINES RUN BY AIR/LIQUID/GAS CYCLE, SPRING FORCE, PUMP, ENERGY BLADES

This is a decision on the correspondence filed on May 28, 2009, which is being treated as a renewed petition under 37 CFR 1.181 to withdraw the holding of abandonment in the above-identified application. In addition, the renewed petition requests a refund of the Notice of Appeal fee paid on June 10, 2008. This request is properly treated as a renewed petition under 37 CFR 1.181, as well.

The petition under 37 CFR 1.181 to withdraw the holding of abandonment is **DISMISSED**.

The petition under 37 CFR 1.181 for refund of the Notice of Appeal fee is **DISMISSED**.

Any request for reconsideration of this decision must be submitted within TWO (2) MONTHS from the mail date of this decision. Extensions of time under 37 CFR 1.136(a) are permitted. This is **not** final agency action within the meaning of 5 U.S.C. § 704.

A final Office action was mailed on April 11, 2008. An amendment after final was filed on April 24, 2008. The amendment after final failed to place this application in *prima facie* condition for allowance, as was explained in the June 5, 2008 Advisory action. On June 10, 2008, petitioner filed a Notice of Appeal and required fee. The application became abandoned as a result of petitioner's failure to file an appeal brief (and fee required by 37 CFR 41.20(b)(2)) within the extendable two month time period provided in 37 CFR 41.37(a)(1). A Notice of Abandonment was mailed on February 18, 2009.

Petitioner argues that the holding of abandonment should be withdrawn because the Office did not inform petitioner the he had to file an Appeal Brief within two months of the filing of his Notice of Appeal.

Petitioner's action of filing of a Notice of Appeal started a time clock. In other words, the Office did **not** set the time clock. Petitioner set a time clock through his prosecution choice. MPEP 1204

Notice of Appeal, III. Acknowledgment states, "The Office does not acknowledge receipt of a notice of appeal by separate letter...." It was petitioner's responsibility to file a proper follow-up submission to the June 10, 2008 Notice of Appeal. Per 37 CFR 41.37(a)(1), an appellant must file a brief under within two months from the date of filing the notice of appeal under § 41.31. Per 37 CFR 41.37(a)(2), the brief must be accompanied by the fee set forth in § 41.20(b)(2). Per 37 CFR 41.37(b), on failure to file the brief, accompanied by the requisite fee, within the period specified in paragraph (a) of this section, the appeal will stand dismissed.

Pursuant to 37 CFR 41.37(e) and 37 CFR 1.136(a), petitioner could have purchased up to a five month extension of time from the June 10, 2008 filing of the Notice of Appeal to file a timely Appeal Brief. Petitioner filed his Appeal Brief on December 30, 2008. However, the Appeal Brief was not accompanied by a petition for an extension of time and required fee.

37 CFR 1.136 (the extension of time provision) implements 35 U.S.C. 41(a)(8) which directs the Director of the USPTO to charge fees for extensions of time to take action in patent applications. Thus, extensions of time fees may not be waived. The application became abandoned on August 11, 2008.

Once again, the undersigned strongly suggests filing a petition stating that the delay was unintentional. Public Law 97-247, § 3, 96 Stat. 317 (1982), which revised patent and trademark fees, amended 35 U.S.C. § 41(a)(7) to provide for the revival of an "unintentionally" abandoned application without a showing that the delay in prosecution or in late payment of an issue fee was "unavoidable." This amendment to 35 U.S.C. § 41(a)(7) has been implemented in 37 CFR 1.137(b).

The filing of a petition under 37 CFR 1.137(b) cannot be intentionally delayed and therefore must be filed promptly. A person seeking revival due to unintentional delay can not make a statement that the delay was unintentional unless the entire delay, including the delay from the date it was discovered that the application was abandoned until the filing of the petition to revive under 37 CFR 1.137(b), was unintentional. A statement that the delay was unintentional is not appropriate if petitioner intentionally delayed the filing of a petition for revival under 37 CFR 1.137(b). The required Rule 137(b) petition fee is $810.00.

In addition to the petition and petition fee, appellant must file:

(A) A request for continued examination (RCE) under 37 CFR 1.114 accompanied by a submission (i.e., a reply under 37 CFR 1.111) and the fee as set forth in 37 CFR 1.17(e) if the application is a utility or plant application filed on or after June 8, 1995, **or** a continuing application under 37 CFR 1.53(b); or

(B) An appeal brief and the appeal brief fee to reinstate the appeal. A proper brief and the required fee must be filed before the petition will be considered on its merits.

With respect to the request that the Office refund the Notice of Appeal fee, petitioner is reminded that the applicable statute, 35 U.S.C. 42(d), authorizes the Commissioner to refund "any fee paid by mistake or any amount paid in excess of that required." Thus the USPTO may refund: (1) a

fee paid when no fee is required (*i.e.*, a fee paid by mistake), or (2) any fee paid in excess of the amount of the fee that is required. See Ex Parte Grady, 59 USPQ 276, 277 (Comm'r Pats. 1943) (the statutory authorization for the refund of fees is applicable only to a mistake relating to the fee payment, and not the underlying action). 37 CFR 1.26(a)

The rules of practice are clear that prosecution of an application to save it from abandonment must include such complete and proper action as the condition of the case may require. Petitioner knowingly paid the Notice of Appeal fee. 37 CFR 1.116 and 1.135(b) are clear that proceedings concerning an amendment after final rejection will not operate to avoid abandonment of the application in the absence of a timely and proper appeal. Petitioner was acting as a prudent applicant when he paid the Notice of Appeal fee. Such conscientious patent practice is not a mistake within the meaning of the aforementioned statute and regulation that warrants a refund.

Petitioner is reminded that the word "shall" appears in 35 U.S.C. § 41(a)(6)(A) pertaining to collection of a fee upon the filing of a Notice of Appeal with the PTO. It is well settled that the use of "shall" in a statute is the language of command, and where the directions of a statute are mandatory, then strict compliance with the statutory terms is essential. Farrel Corp. v. U.S. Int'l Trade Comm'n, 942 F.2d 1147, 20 USPQ2d 1912 (Fed. Cir. 1991). That is, it is mandatory that the Commissioner charge, and the applicant pay, the fees specified by statute upon presentation of a request for a service by the PTO. See BEC Pressure Controls Corp. v. Dwyer Instruments, Inc., 380 F.Supp. 1397, 1399, 182 USPQ 190, 192 (N.D. Ind. 1974). The language of the statute does not permit the Commissioner any discretion with respect to charging the fees set forth therein. Id.

Petitioner admits that he knowingly paid the Notice of Appeal fee, but since the application is abandoned now, he argues that he paid it by mistake. Petitioner is reminded that a change of heart/purpose after the payment of a fee properly due at the time will not entitle the party to a refund of such fee, per 37 CFR 1.26(a). At the time petitioner paid the Notice of Appeal fee, it was due and he meant to pay it.

The Notice of Appeal fee was properly charged and will not be refunded.

Further correspondence with respect to this matter should be addressed as follows:

By mail:

Mail Stop PETITION
Commissioner for Patents
Post Office Box 1450
Alexandria, VA 22313-1450

By hand:

U.S. Patent and Trademark Office
Customer Service Window, Mail Stop Petition
Randolph Building
401 Dulany Street
Alexandria, VA 22314

By FAX: (571) 273-8300 - ATTN: Office of Petitions

Telephone inquiries may be directed to the undersigned at (571) 272-3230.

Shirene Willis Brantley
Senior Petitions Attorney
Office of Petitions

UNITED STATES PATENT AND TRADEMARK OFFICE

Commissioner for Patents
United States Patent and Trademark Office
P.O. Box 1450
Alexandria, VA 22313-1450
www.uspto.gov

FITCH EVEN TABIN & FLANNERY
120 SOUTH LASALLE STREET
SUITE 1600
CHICAGO IL 60603-3406

COPY MAILED

NOV 23 2009

OFFICE OF PETITIONS

In re Application
Stephan W. Wegerich et al.
Application No. 11/409,920
Filed: April 24, 2006
Attorney Docket No. **7060/87817**

: DECISION ON APPLICATION
: FOR PATENT TERM ADJUSTMENT

This is in response to the APPLICATION FOR PATENT TERM AD[USTMENT UNDER 37 C.F.R. § 1.705(b) filed September 15, 2009. Applicant requests that the determination of patent term adjustment be corrected from 539 days to 837 days. Applicant requests this correction in part on the basis that the Office will take in excess of three years to issue this patent and in light of the recent court decision in Wyeth v. Dudas, No. 07-1492 (D.D.C. September 30, 2008).

As the instant application for patent term adjustment requests reconsideration of the patent term adjustment as it relates to the Office's failure to issue the patent within three years of the filing date, the application for patent term adjustment under 37 CFR 1.705(b) is **DISMISSED as PREMATURE**.

Knowledge of the actual date the patent issues is required to calculate the amount, if any, of additional patent term patentees are entitled to for Office failure to issue the patent within three years. See 37 CFR 1.702(b). (This is true even where a request for continued examination (RCE) was filed). The computer will not undertake the § 1.702(b) calculation until the actual date of issuance of the patent has been determined. Likewise, the computer will not calculate any further Office delay under 37 CFR 1.702(a)(4) or applicant delay under 37 CFR 1.704(c)(10) until the actual date of issuance of the patent has been determined. As such, the Office cannot make a determination on the of the patent term adjustment concerning those regulations until the patent has issued.

Requesting reconsideration of the patent term adjustment to be indicated on the patent under 37 CFR 1.705(b) based on the initial determination of patent term adjustment and a projected issuance date of the patent (or even the filing date of the request for

continued examination) is premature. Accordingly, it is appropriate to dismiss such a request as premature.

Rather than file an application for patent term adjustment under 37 CFR 1.705(b) contesting the 37 CFR 1.702(b) calculation at the time of the mailing of the notice of allowance, applicants are advised that they may wait until the time of the issuance of the patent and file a request for reconsideration of the patent term adjustment pursuant to 37 CFR 1.705(d). As the USPTO does not calculate the amount of time earned pursuant to 37 CFR 1.702(b) until the time of the issuance of the patent, the Office will consider any request for reconsideration of the patent term adjustment due to an error in the calculation of 37 CFR 1.702(b) to be timely if the request for reconsideration is filed within two months of the issuance of the patent. However, as to all other bases for contesting the initial determination of patent term adjustment received with the notice of allowance, applicants must timely file an application for patent term adjustment prior to the payment of the issue fee.[1]

Any request for reconsideration of the patent term adjustment indicated on the patent must be timely filed within two months after issuance pursuant to 37 CFR 1.705(d) and must include payment of the required fee under 37 CFR 1.18(e). The Office notes that the request did provide a deposit account for payment of the required fee.

The Office of Data Management has been advised of this decision. This application is being referred to the Office of Data Management for issuance of the patent.

Telephone inquiries specific to this decision should be directed to Senior Petitions Attorney Patricia Faison-Ball at (571) 272-3212.

/Kery A. Fries/

Kery A. Fries
Senior Legal Advisor
Office of Patent Legal Administration
Office of Deputy Commissioner
for Examination Policy

[1] For example, if applicants dispute both the calculation of patent term adjustment under 37 CFR 1.702(a)(1) for Office failure to mail a first Office action or notice of allowance not later than fourteen months after the date on which the application was filed, and under 37 CFR 1.702(b) for Office failure to issue a patent within three years of the actual filing date of the application, then applicants must still timely file an application for patent term adjustment prior to the payment of the issue fee to contest the calculation of Office delay in issuing a first Office action or notice of allowance. See 37 CFR 1.705(b) and 35 U.S.C. 154(b)(3)(B). A dispute as to the calculation of the § 1.702(a)(1) period raised on request for reconsideration of patent term adjustment under 37 CFR 1.705(d) will be dismissed as untimely filed.

UNITED STATES PATENT AND TRADEMARK OFFICE

UNITED STATES DEPARTMENT OF COMMERCE
United States Patent and Trademark Office
Address: COMMISSIONER FOR PATENTS
P.O. Box 1450
Alexandria, Virginia 22313-1450
www.uspto.gov

FITCH EVEN TABIN & FLANNERY
120 SOUTH LASALLE STREET
SUITE 1600
CHICAGO, IL 60603-3406

Mail Date: 04/21/2010

Applicant	: Stephan W. Wegerich	: DECISION ON REQUEST FOR
Patent Number	: 7640145	: RECALCULATION of PATENT
Issue Date	: 12/29/2009	: TERM ADJUSTMENT IN VIEW
Appliction No	: 11/409,920	: OF WYETH AND NOTICE OF INTENT TO
Filed	: 04/24/2006	: ISSUE CERTIFICATE OF CORRECTION
		:

The Request for Recalculation is **GRANTED** to the extent indicated.

The patent term adjustment has been determined to be **788** days. The USPTO will *sua sponte* issue a certificate of correction reflecting the amount of PTA days determined by the recalculation.

Prior to the issuance of the certificate of correction, the USPTO will afford patentee an opportunity to be heard and request reconsideration. Accordingly, patentee has **one month or thirty (30) days**, whichever is longer, to file a request for reconsideration of this patent term adjustment calculation. See 35 U.S.C. 154(b)(3)(B)(ii) and 37 CFR 1.322(a)(4). No extensions of time will be granted under 37 CFR 1.136.

Patentee should use document code PET.OP if electronically filing a request for reconsideration of this patent term adjustment calculation. The patentee must also include the information required by 37 CFR 1.705(b)(2) and the fee required by 37 CFR 1.18(e). If patentee does not file a timely request for reconsideration of this patent term adjustment calculation including the information required by 37 CFR 1.705(b)(2) and the fee required by 37 CFR 1.18(e), the USPTO will issue a certificate of correction reflecting the PTA determination noted above.

Patentee should be aware that in order to preserve the right to review in the United States District Court for the District of Columbia of the USPTO patent term adjustment determination, patentee must ensure that he or she also take the steps required under 35 U.S.C. 154(b)(4)(A) in a timely manner. Nothing in the request for recalculation should be construed as providing an alternative time frame for commencing a civil action under 35 U.S.C. 154(b)(4)(A).

Any questions concerning this decision should be directed to the Office of Patent Legal Administration at 571-272-7702.

UNITED STATES PATENT AND TRADEMARK OFFICE

Commissioner for Patents
United States Patent and Trademark Office
P.O. Box 1450
Alexandria, VA 22313-1450
www.uspto.gov

COPY MAILED

SEP 02 2008

JOHN RYZNIC
FLORIDA TURBINE TECHNOLOGIES, INC.
1701 MILITARY TRAIL, SUITE 110
JUPITER FL 33458-7887

In re Application of :
Ebert, et al. : DECISION ON PETITION
Application No. 11/409,925 :
For: April 22, 2006 :
Atty. Dkt. No.: FTT-187R :

This is a decision on the petition under 37 CFR 1.137(a), June 23, 2008, to revive the above-identified application.

The petition under 37 CFR 1.137(a) is **DISMISSED**.

Any request for reconsideration of this decision must be submitted within **TWO (2) MONTHS** from mail date of this decision. Extensions of time under 37 CFR 1.136(a) are permitted. The reconsideration request should include a cover letter entitled "Renewed Petition under 37 CFR 1.137(a)." This is not a final agency decision.

This application became abandoned June 4, 2008 for failure to timely submit a proper reply to the Notice of Allowance and Issue Fee Due (Notice) mailed March 3, 2008. The Notice set a three month statutory period of time for reply. The issue fee was untimely submitted June 10, 2008. Notice of Abandonment was mailed June 20, 2008.

A grantable petition under 37 CFR 1.137(a) must be accompanied by: (1) the required reply, unless previously filed; (2) the petition fee as set forth in 37 CFR 1.17(l); (3) a showing to the satisfaction of the Director that the entire delay in filing the required reply from the due date for the reply until the filing of a grantable petition pursuant to 37 CFR 1.137(a) was unavoidable; and (4) any terminal disclaimer (and fee as set forth in 37 CFR 1.20(d)) required pursuant to 37 CFR 1.137(c).

The instant petition fails to satisfy requirement (3) set forth above.

Petitioner has failed to present a showing to the satisfaction of the Director that the entire delay in filing the required reply from the due date for the reply until the filing of a grantable petition pursuant to 37 CFR 1.137(a) was unavoidable.

The Office may revive an abandoned application if the delay in responding to the relevant outstanding Office requirement is shown to the satisfaction of the Director to have been "unavoidable." See, 37 CFR 1.137(a)(3). Decisions on reviving abandoned applications have adopted the reasonably prudent person standard in determining if the delay was unavoidable. Ex parte Pratt, 1887 Dec. Comm'r Pat. 31, 32-33 (Comm'r Pat. 1887)(the term "unavoidable" "is applicable to ordinary human affairs, and requires no more or greater care or diligence than is generally used and observed by prudent and careful men in relation to their most important business"); In re Mattullath, 38 App. D.C. 497, 514-15 (D.C. Cir. 1912); Ex parte Henrich, 1913 Dec. Comm'r Pat. 139, 141 (Comm'r Pat. 1913). In addition, decisions on revival are made on a "case-by-case basis, taking all the facts and circumstances into account." Smith v. Mossinghoff, 671 F.2d 533, 538, 213 USPQ 977, 982 (D.C. Cir. 1982). A petition to revive an application as unavoidably abandoned cannot be granted where petitioner has failed to meet his or her burden of establishing the cause of the unavoidable delay. Haines v. Quigg, 673 F. Supp. 314, 5 USPQ2d 1130 (N.D. Ind. 1987).

Petitioner attributes the failure to timely reply to the Notice of Allowance to non-receipt of the Office communication as a consequence of a change of correspondence address. Petitioner alleges a change of correspondence address was submitted to the Office after the mailing of the Notice of Allowance. Petitioner further argues that the USPTO was aware that the Notice was "undeliverable" and that the USPTO was "made aware of the applicant's new mailing address."

In accordance with MPEP 711.03(c), where an application becomes abandoned as a consequence of a change of correspondence address (the Office action being mailed to the old, uncorrected address and failing to reach the applicant in sufficient time to permit a timely reply), an adequate showing of "unavoidable" delay will require a showing that due care was taken to adhere to the requirement for prompt notification in each concerned application of the change of address, and must include an adequate showing that a timely notification of the change of address was filed in the application concerned, and in a manner reasonably calculated to call attention to the fact that it was

a notification of a change of address. Specifically, the mere inclusion, in a paper filed in an application for another purpose, of an address differing from the previously provided correspondence address, without mention of the fact that an address change was being made.

No change of correspondence address was filed prior to the mailing of the Notice of Allowance. Accordingly, the delay at issue is not found to be unavoidable within the meaning of 37 CFR 1.137(a).

Any renewed petition must establish that the entire period of time from the time that a reply to the Notice was due until the filing of a grantable petition was unavoidable.

ALTERNATE VENUE

Petitioner may wish to consider filing a petition stating that the entire delay was unintentional. Petitioner's attention is directed to 37 CFR 1.137(b) which provides for the revival of an "unintentionally" abandoned application without a showing that the delay in prosecution or in late payment of an issue fee was "unavoidable". An "unintentional" petition under 37 CFR 1.137(b) must be accompanied by the required petition fee and reply.

The filing of a petition under 37 CFR 1.137(b) cannot be intentionally delayed and therefore must be filed promptly. A person seeking revival due to unintentional delay cannot make a statement that the delay was unintentional unless the entire delay, including the delay from the date it was discovered that the application was abandoned until the filing of the petition to revive under 37 CFR 1.137(b), was unintentional. A statement that the delay was unintentional is not appropriate if petitioner intentionally delayed the filing of a petition for revival under 37 CFR 1.137(b).

Further correspondence with respect to this matter should be addressed as follows:

By mail: Mail Stop Petition
Commissioner for Patents
P.O. Box 1450
Alexandria, VA 22313-1450

By facsimile: (571) 273-8300

By hand: U.S. Patent and Trademark Office

Customer Window
Mail Stop Petition
Randolph Building
Dulany Street
Alexandria, VA 22314

Telephone inquiries concerning this matter may be directed to the undersigned at (571) 272-3205.

Alesia M. Brown
Petitions Attorney
Office of Petitions

UNITED STATES PATENT AND TRADEMARK OFFICE

Commissioner for Patents
United States Patent and Trademark Office
P.O. Box 1450
Alexandria, VA 22313-1450
www.uspto.gov

JOHN RYZNIC
FLORIDA TURBINE TECHNOLOGIES, INC.
1701 MILITARY TRAIL, SUITE 110
JUPITER FL 33458-7887

COPY MAILED

SEP 26 2008

OFFICE OF PETITIONS

In re Application of
Ebert, et al.
Application No. 11/409,925
For: April 22, 2006
Atty. Dkt. No.: FTT-187R

: DECISION ON PETITION

This is a decision on the petition renewed under 37 CFR 1.137(b), September 25, 2008, to revive the above-identified application.

The petition is **GRANTED**.

This application became abandoned June 4, 2008 for failure to timely submit a proper reply to the Notice of Allowance and Issue Fee Due (Notice) mailed March 3, 2008. The Notice set a three month statutory period of time for reply. The issue fee was untimely submitted June 10, 2008. Notice of Abandonment was mailed June 20, 2008.

The petition satisfies the requirements of 37 CFR 1.137(b) in that petitioner has supplied (1) the reply in the form of payment of the issue fee on June 10, 2008, (2) the required petition fee; and (3) a proper statement of unintentional delay.

Telephone inquiries concerning this decision should be directed to the undersigned at (571) 272-3205.

This application is being referred to the Office of Data Management for processing into a patent.

Alesia M. Brown
Petitions Attorney
Office of Petitions

UNITED STATES PATENT AND TRADEMARK OFFICE

UNITED STATES DEPARTMENT OF COMMERCE
United States Patent and Trademark Office
Address: COMMISSIONER FOR PATENTS
P.O. Box 1450
Alexandria, Virginia 22313-1450
www.uspto.gov

APPLICATION NO.	FILING DATE	FIRST NAMED INVENTOR	ATTORNEY DOCKET NO.	CONFIRMATION NO.
11/409,927	04/24/2006	Ulrich H. von Andrian	C007-7019US1	4098

21127 7590 01/13/2010

RISSMAN HENDRICKS & OLIVERIO, LLP
100 Cambridge Street
Suite 2101
BOSTON, MA 02114

EXAMINER	
BRISTOL, LYNN ANNE	

ART UNIT	PAPER NUMBER
1643	

NOTIFICATION DATE	DELIVERY MODE
01/13/2010	ELECTRONIC

Please find below and/or attached an Office communication concerning this application or proceeding.

The time period for reply, if any, is set in the attached communication.

Notice of the Office communication was sent electronically on above-indicated "Notification Date" to the following e-mail address(es):

mbien-aime@rhoiplaw.com
cjoseph@rhoiplaw.com
info@rhoiplaw.com

UNITED STATES PATENT AND TRADEMARK OFFICE

Commissioner for Patents
United States Patent and Trademark Office
P.O. Box 1450
Alexandria, VA 22313-1450
www.uspto.gov

RISSMAN HENDRICKS & OLIVERIO, LLP
100 Cambridge Street
Suite 2101
BOSTON MA 02114

JAN 1 3 2010

In re Application of:
Ulrich H. von Andrian et al.
Serial No.: 11/409,927
Filed: April 24, 2006
Attorney Docket No.: **C007-7019US1**

: PETITION DECISION

This is in response to the petition under 37 CFR § 1.59(b), filed September 28, 2009, to expunge information from the above identified application. This application has not been allowed.

Petitioner requests that a sequence listing was filed in this application on December 2, 2008, which filing was made in error. Hence, it is requested that this sequence listing be expunged from the record. Petitioner states either: (A) that the information contains trade secret material, proprietary material and/or material that is subject to a protective order which has not been made public; or (B) that the information submitted was unintentionally submitted and the failure to obtain its return would cause irreparable harm to the party who submitted the information or to the party in interest on whose behalf the information was submitted, and the information has not otherwise been made public. The petition fee set forth in 37 CFR § 1.17(g) has been paid.

The reasons set forth in this petition establishes to the satisfaction of the Director that expungement of the information is appropriate. The file entry for this document has been closed and as such the document is no longer publicly available, which is the IFW equivalent to removal of a paper document from a paper file wrapper.

Therefore, petitioner's petition is GRANTED.

Should there be any questions about this decision please contact Marianne C. Seidel by letter addressed to Director, TC 1600, at the address listed above, or by telephone at 571-272-0584 or by facsimile sent to the general Office facsimile number, 703-872-9306.

Marianne C. Seidel
Quality Assurance Specialist
Technology Center 1600

UNITED STATES PATENT AND TRADEMARK OFFICE

UNITED STATES DEPARTMENT OF COMMERCE
United States Patent and Trademark Office
Address: COMMISSIONER FOR PATENTS
P.O. Box 1450
Alexandria, Virginia 22313-1450
www.uspto.gov

KNOBBE MARTENS OLSON & BEAR LLP
2040 MAIN STREET
FOURTEENTH FLOOR
IRVINE, CA 92614

Mail Date: 04/20/2010

Applicant	: Suzanne Cory	: DECISION ON REQUEST FOR
Patent Number	: 7582439	: RECALCULATION of PATENT
Issue Date	: 09/01/2009	: TERM ADJUSTMENT IN VIEW
Appliction No	: 11/409,944	: OF WYETH AND NOTICE OF INTENT TO
Filed	: 04/24/2006	: ISSUE CERTIFICATE OF CORRECTION
		:

The Request for Recalculation is **GRANTED** to the extent indicated.

The patent term adjustment has been determined to be **0** days. The USPTO will *sua sponte* issue a certificate of correction reflecting the amount of PTA days determined by the recalculation.

Prior to the issuance of the certificate of correction, the USPTO will afford patentee an opportunity to be heard and request reconsideration. Accordingly, patentee has **one month or thirty (30) days**, whichever is longer, to file a request for reconsideration of this patent term adjustment calculation. See 35 U.S.C. 154(b)(3)(B)(ii) and 37 CFR 1.322(a)(4). No extensions of time will be granted under 37 CFR 1.136.

Patentee should use document code PET.OP if electronically filing a request for reconsideration of this patent term adjustment calculation. The patentee must also include the information required by 37 CFR 1.705(b)(2) and the fee required by 37 CFR 1.18(e). If patentee does not file a timely request for reconsideration of this patent term adjustment calculation including the information required by 37 CFR 1.705(b)(2) and the fee required by 37 CFR 1.18(e), the USPTO will issue a certificate of correction reflecting the PTA determination noted above.

Patentee should be aware that in order to preserve the right to review in the United States District Court for the District of Columbia of the USPTO patent term adjustment determination, patentee must ensure that he or she also take the steps required under 35 U.S.C. 154(b)(4)(A) in a timely manner. Nothing in the request for recalculation should be construed as providing an alternative time frame for commencing a civil action under 35 U.S.C. 154(b)(4)(A).

Any questions concerning this decision should be directed to the Office of Patent Legal Administration at 571-272-7702.

SPE RESPONSE FOR CERTIFICATE OF CORRECTION

DATE : 4/7/10 Paper No.: —

TO SPE OF : ART UNIT 1642

SUBJECT : Request for Certificate of Correction for Appl. No.: 11/409944 Patent No.: 7582439B2

Please respond to this request for a certificate of correction within 7 days.

FOR IFW FILES:

Please review the requested changes/corrections as shown in the **COCIN** document(s) in the IFW application image. No new matter should be introduced, nor should the scope or meaning of the claims be changed.

Please complete the response (see below) and forward the completed response to scanning using document code **COCX**.

FOR PAPER FILES:

Please review the requested changes/corrections as shown in the attached certificate of correction. Please complete this form (see below) and forward it with the file to:

Certificates of Correction Branch (CofC)
Randolph Square – 9D10-A
Palm Location 7580

Virginia Tolbert
Certificates of Correction Branch
571-272-0460

Thank You For Your Assistance

The request for issuing the above-identified correction(s) is hereby:
Note your decision on the appropriate box.

☒ **Approved**	All changes apply.
☐ **Approved in Part**	Specify below which changes **do not** apply.
☐ **Denied**	State the reasons for denial below.

Comments: _____

LARRY R. HELMS, PH.D.
SUPERVISORY PATENT EXAMINER
5/12/10

LARRY R. HELMS, PH.D.
PATENT EXAMINER

UNITED STATES PATENT AND TRADEMARK OFFICE

UNITED STATES DEPARTMENT OF COMMERCE
United States Patent and Trademark Office
Address: COMMISSIONER FOR PATENTS
P.O. Box 1450
Alexandria, Virginia 22313-1450
www.uspto.gov

BROWDY AND NEIMARK, P.L.L.C.
624 NINTH STREET, NW
SUITE 300
WASHINGTON, DC 20001-5303

Mail Date: 04/30/2010

Applicant	: Kouki Ozaki	: DECISION ON REQUEST FOR
Patent Number	: 7666519	: RECALCULATION of PATENT
Issue Date	: 02/23/2010	: TERM ADJUSTMENT IN VIEW
Application No	: 11/410,006	: OF WYETH AND NOTICE OF INTENT TO
Filed	: 04/25/2006	: ISSUE CERTIFICATE OF CORRECTION
		:

The Request for Recalculation is **GRANTED** to the extent indicated.

The patent term adjustment has been determined to be **699** days. The USPTO will *sua sponte* issue a certificate of correction reflecting the amount of PTA days determined by the recalculation.

Prior to the issuance of the certificate of correction, the USPTO will afford patentee an opportunity to be heard and request reconsideration. Accordingly, patentee has **one month or thirty (30) days**, whichever is longer, to file a request for reconsideration of this patent term adjustment calculation. See 35 U.S.C. 154(b)(3)(B)(ii) and 37 CFR 1.322(a)(4). No extensions of time will be granted under 37 CFR 1.136.

Patentee should use document code PET.OP if electronically filing a request for reconsideration of this patent term adjustment calculation. The patentee must also include the information required by 37 CFR 1.705(b)(2) and the fee required by 37 CFR 1.18(e). If patentee does not file a timely request for reconsideration of this patent term adjustment calculation including the information required by 37 CFR 1.705(b)(2) and the fee required by 37 CFR 1.18(e), the USPTO will issue a certificate of correction reflecting the PTA determination noted above.

Patentee should be aware that in order to preserve the right to review in the United States District Court for the District of Columbia of the USPTO patent term adjustment determination, patentee must ensure that he or she also take the steps required under 35 U.S.C. 154(b)(4)(A) in a timely manner. Nothing in the request for recalculation should be construed as providing an alternative time frame for commencing a civil action under 35 U.S.C. 154(b)(4)(A).

Any questions concerning this decision should be directed to the Office of Patent Legal Administration at 571-272-7702.

UNITED STATES PATENT AND TRADEMARK OFFICE

UNITED STATES DEPARTMENT OF COMMERCE
United States Patent and Trademark Office
Address: COMMISSIONER FOR PATENTS
P.O. Box 1450
Alexandria, Virginia 22313-1450
www.uspto.gov

STERNE, KESSLER, GOLDSTEIN & FOX P.L.L.C.
1100 NEW YORK AVENUE, N.W.
WASHINGTON, DC 20005

Mail Date: 04/21/2010

Applicant	: Erlend Olson	: DECISION ON REQUEST FOR
Patent Number	: 7636558	: RECALCULATION of PATENT
Issue Date	: 12/22/2009	: TERM ADJUSTMENT IN VIEW
Appliction No	: 11/410,008	: OF WYETH AND NOTICE OF INTENT TO
Filed	: 04/25/2006	: ISSUE CERTIFICATE OF CORRECTION
		:

The Request for Recalculation is **GRANTED** to the extent indicated.

The patent term adjustment has been determined to be **0** days. The USPTO will *sua sponte* issue a certificate of correction reflecting the amount of PTA days determined by the recalculation.

Prior to the issuance of the certificate of correction, the USPTO will afford patentee an opportunity to be heard and request reconsideration. Accordingly, patentee has **one month or thirty (30) days**, whichever is longer, to file a request for reconsideration of this patent term adjustment calculation. See 35 U.S.C. 154(b)(3)(B)(ii) and 37 CFR 1.322(a)(4). No extensions of time will be granted under 37 CFR 1.136.

Patentee should use document code PET.OP if electronically filing a request for reconsideration of this patent term adjustment calculation. The patentee must also include the information required by 37 CFR 1.705(b)(2) and the fee required by 37 CFR 1.18(e). If patentee does not file a timely request for reconsideration of this patent term adjustment calculation including the information required by 37 CFR 1.705(b)(2) and the fee required by 37 CFR 1.18(e), the USPTO will issue a certificate of correction reflecting the PTA determination noted above.

Patentee should be aware that in order to preserve the right to review in the United States District Court for the District of Columbia of the USPTO patent term adjustment determination, patentee must ensure that he or she also take the steps required under 35 U.S.C. 154(b)(4)(A) in a timely manner. Nothing in the request for recalculation should be construed as providing an alternative time frame for commencing a civil action under 35 U.S.C. 154(b)(4)(A).

Any questions concerning this decision should be directed to the Office of Patent Legal Administration at 571-272-7702.

UNITED STATES PATENT AND TRADEMARK OFFICE

UNITED STATES DEPARTMENT OF COMMERCE
United States Patent and Trademark Office
Address: COMMISSIONER FOR PATENTS
P.O. Box 1450
Alexandria, Virginia 22313-1450
www.uspto.gov

BACON & THOMAS, PLLC
625 SLATERS LANE
FOURTH FLOOR
ALEXANDRIA, VA 22314-1176

Mail Date: 04/28/2010

Applicant	: Hsu-Pin Kao	: DECISION ON REQUEST FOR
Patent Number	: 7609886	: RECALCULATION of PATENT
Issue Date	: 10/27/2009	: TERM ADJUSTMENT IN VIEW
Application No	: 11/410,041	: OF WYETH AND NOTICE OF INTENT TO
Filed	: 04/25/2006	: ISSUE CERTIFICATE OF CORRECTION
		:

The Request for Recalculation is **GRANTED** to the extent indicated.

The patent term adjustment has been determined to be **777** days. The USPTO will *sua sponte* issue a certificate of correction reflecting the amount of PTA days determined by the recalculation.

Prior to the issuance of the certificate of correction, the USPTO will afford patentee an opportunity to be heard and request reconsideration. Accordingly, patentee has **one month or thirty (30) days**, whichever is longer, to file a request for reconsideration of this patent term adjustment calculation. See 35 U.S.C. 154(b)(3)(B)(ii) and 37 CFR 1.322(a)(4). No extensions of time will be granted under 37 CFR 1.136.

Patentee should use document code PET.OP if electronically filing a request for reconsideration of this patent term adjustment calculation. The patentee must also include the information required by 37 CFR 1.705(b)(2) and the fee required by 37 CFR 1.18(e). If patentee does not file a timely request for reconsideration of this patent term adjustment calculation including the information required by 37 CFR 1.705(b)(2) and the fee required by 37 CFR 1.18(e), the USPTO will issue a certificate of correction reflecting the PTA determination noted above.

Patentee should be aware that in order to preserve the right to review in the United States District Court for the District of Columbia of the USPTO patent term adjustment determination, patentee must ensure that he or she also take the steps required under 35 U.S.C. 154(b)(4)(A) in a timely manner. Nothing in the request for recalculation should be construed as providing an alternative time frame for commencing a civil action under 35 U.S.C. 154(b)(4)(A).

Any questions concerning this decision should be directed to the Office of Patent Legal Administration at 571-272-7702.

UNITED STATES PATENT AND TRADEMARK OFFICE

Commissioner for Patents
United States Patent and Trademark Office
P.O. Box 1450
Alexandria, VA 22313-1450
www.uspto.gov

APPLICATION NUMBER	FILING/RECEIPT DATE	FIRST NAMED APPLICANT	ATTORNEY DOCKET NUMBER
11/410,058	04/25/2006	Hirokuni Kawasaki	SON-3535

RADER FISHMAN & GRAUER PLLC
LION BUILDING
1233 20TH STREET N.W., SUITE 501
WASHINGTON DC 20036

DATE MAILED: August 23, 2007

DECISION GRANTING PETITION UNDER 37 CFR 1.138(d)
The declaration of express abandonment is recognized

This is in response to the petition under 37 CFR 1.138(d) filed August 7, 2007, requesting for a refund of any previously paid search fee and excess claims fee in the above-identified application.

The petition is granted.

The express abandonment is recognized. Any previously paid search fee and excess claims fee are hereby refunded.

Any inquiries concerning this decision should be directed to the Pre-Grant Publication Division at (703) 605-4283.

Barbara J. Debnam
Pre-Grant Publication Division

UNITED STATES PATENT AND TRADEMARK OFFICE

Commissioner for Patents
United States Patent and Trademark Office
P.O. Box 1450
Alexandria, VA 22313-1450
www.uspto.gov

ERIC ROBINSON
PMB 955
21010 SOUTHBANK ST.
POTOMAC FALLS VA 20165

COPY MAILED

APR 16 2007

OFFICE OF PETITIONS

In re Application of :
Junya Maruyama et al :
Application No. 11/410,073 : ON PETITION
Filed: April 25, 2006 :
Attorney Docket No. 0756-7687 :

This is a decision on the petition, filed April 13, 2007, under 37 CFR 1.313(c)(2) to withdraw the above-identified application from issue after payment of the issue fee.

The petition is **GRANTED.**

The above-identified application is withdrawn from issue for consideration of a submission under 37 CFR 1.114 (request for continued examination). See 37 CFR 1.313(c)(2).

Petitioner is advised that the issue fee paid on April 5, 2007 in the above-identified application cannot be refunded. If, however, the above-identified application is again allowed, petitioner may request that it be applied towards the issue fee required by the new Notice of Allowance.[1]

Telephone inquiries should be directed to the undersigned at (571) 272-3208.

The examiner of Technology Center AU 2822 will consider the request for continued examination under 37 CFR 1.114.

Karen Creasy

Karen Creasy
Petitions Examiner
Office of Petitions

[1] The request to apply the issue fee to the new Notice may be satisfied by completing and returning the new Issue Fee Transmittal Form PTOL-85(b), which includes the following language thereon: "Commissioner for Patents is requested to apply the Issue Fee and Publication Fee (if any) or re-apply any previously paid issue fee to the application identified above." Petitioner is advised that, whether a fee is indicated as being due or not, the Issue Fee Transmittal Form **must** be completed and timely submitted to avoid abandonment. Note the language in bold text on the first page of the Notice of Allowance and Fee(s) Due (PTOL-85).

UNITED STATES PATENT AND TRADEMARK OFFICE

UNITED STATES DEPARTMENT OF COMMERCE
United States Patent and Trademark Office
Address: COMMISSIONER FOR PATENTS
P.O. Box 1450
Alexandria, Virginia 22313-1450
www.uspto.gov

DICKSTEIN SHAPIRO LLP
1825 EYE STREET, NW
WASHINGTON, DC 20006

Mail Date: 04/21/2010

Applicant	: Atif Sarwari	: DECISION ON REQUEST FOR
Patent Number	: 7630008	: RECALCULATION of PATENT
Issue Date	: 12/08/2009	: TERM ADJUSTMENT IN VIEW
Appliction No	: 11/410,100	: OF WYETH AND NOTICE OF INTENT TO
Filed	: 04/25/2006	: ISSUE CERTIFICATE OF CORRECTION
		:

The Request for Recalculation is **GRANTED** to the extent indicated.

The patent term adjustment has been determined to be **477** days. The USPTO will *sua sponte* issue a certificate of correction reflecting the amount of PTA days determined by the recalculation.

Prior to the issuance of the certificate of correction, the USPTO will afford patentee an opportunity to be heard and request reconsideration. Accordingly, patentee has **one month or thirty (30) days**, whichever is longer, to file a request for reconsideration of this patent term adjustment calculation. See 35 U.S.C. 154(b)(3)(B)(ii) and 37 CFR 1.322(a)(4). No extensions of time will be granted under 37 CFR 1.136.

Patentee should use document code PET.OP if electronically filing a request for reconsideration of this patent term adjustment calculation. The patentee must also include the information required by 37 CFR 1.705(b)(2) and the fee required by 37 CFR 1.18(e). If patentee does not file a timely request for reconsideration of this patent term adjustment calculation including the information required by 37 CFR 1.705(b)(2) and the fee required by 37 CFR 1.18(e), the USPTO will issue a certificate of correction reflecting the PTA determination noted above.

Patentee should be aware that in order to preserve the right to review in the United States District Court for the District of Columbia of the USPTO patent term adjustment determination, patentee must ensure that he or she also take the steps required under 35 U.S.C. 154(b)(4)(A) in a timely manner. Nothing in the request for recalculation should be construed as providing an alternative time frame for commencing a civil action under 35 U.S.C. 154(b)(4)(A).

Any questions concerning this decision should be directed to the Office of Patent Legal Administration at 571-272-7702.

UNITED STATES PATENT AND TRADEMARK OFFICE

Commissioner for Patents
United States Patent and Trademark Office
P.O. Box 1450
Alexandria, VA 22313-1450
www.uspto.gov

HOFFMANN & BARON, LLP
6900 JERICHO TURNPIKE
SYOSSET, NY 11791

COPY MAILED

APR 13 2009

OFFICE OF PETITIONS

In re Application of :
Jamie S. Henderson :
Application No. 11/410,116 : DECISION ON PETITION
Filed: April 22, 2006 : TO WITHDRAW
Attorney Docket No. 760-75 DIV/CON : FROM RECORD
:

This is a decision on the Request to Withdraw as attorney or agent of record under 37 C.F.R. § 1.36(b), filed March 17, 2009.

The request is **NOT APPROVED**.

A grantable request to withdraw as attorney/agent of record must be signed by every attorney/agent seeking to withdraw or contain a clear indication that one attorney is signing on behalf of another/others.

The request cannot be approved because the practitioners were not appointed by customer number 23869. In order to withdraw by customer number practitioners must be appointed by customer number.

All future communications from the Office will continue to be directed to the above-listed address until otherwise notified by applicant.

Telephone inquiries concerning this decision should be directed to undersigned at 571-272-1642. All other inquiries concerning the examination or status of this application should be directed to the Technology Center.

/AMW/
April M. Wise
Petitions Examiner
Office of Petitions

cc: BOSTON SCIENTIFIC SCHIMED, INC.
ONE SCHIMED PLACE
MAPLE GROVE, MN 55311-1566

UNITED STATES PATENT AND TRADEMARK OFFICE

UNITED STATES DEPARTMENT OF COMMERCE
United States Patent and Trademark Office
Address: COMMISSIONER FOR PATENTS
P.O. Box 1450
Alexandria, Virginia 22313-1450
www.uspto.gov

YOUNG & THOMPSON
209 Madison Street
Suite 500
Alexandria, VA 22314

Mail Date: 05/14/2010

Applicant	: Marco Caleffi	: DECISION ON REQUEST FOR
Patent Number	: 7617989	: RECALCULATION of PATENT
Issue Date	: 11/17/2009	: TERM ADJUSTMENT IN VIEW
Application No	: 11/410,119	: OF WYETH AND NOTICE OF INTENT TO
Filed	: 04/25/2006	: ISSUE CERTIFICATE OF CORRECTION
		:

The Request for Recalculation is **GRANTED** to the extent indicated.

The patent term adjustment has been determined to be **712** days. The USPTO will *sua sponte* issue a certificate of correction reflecting the amount of PTA days determined by the recalculation.

Prior to the issuance of the certificate of correction, the USPTO will afford patentee an opportunity to be heard and request reconsideration. Accordingly, patentee has **one month or thirty (30) days**, whichever is longer, to file a request for reconsideration of this patent term adjustment calculation. See 35 U.S.C. 154(b)(3)(B)(ii) and 37 CFR 1.322(a)(4). No extensions of time will be granted under 37 CFR 1.136.

Patentee should use document code PET.OP if electronically filing a request for reconsideration of this patent term adjustment calculation. The patentee must also include the information required by 37 CFR 1.705(b)(2) and the fee required by 37 CFR 1.18(e). If patentee does not file a timely request for reconsideration of this patent term adjustment calculation including the information required by 37 CFR 1.705(b)(2) and the fee required by 37 CFR 1.18(e), the USPTO will issue a certificate of correction reflecting the PTA determination noted above.

Patentee should be aware that in order to preserve the right to review in the United States District Court for the District of Columbia of the USPTO patent term adjustment determination, patentee must ensure that he or she also take the steps required under 35 U.S.C. 154(b)(4)(A) in a timely manner. Nothing in the request for recalculation should be construed as providing an alternative time frame for commencing a civil action under 35 U.S.C. 154(b)(4)(A).

Any questions concerning this decision should be directed to the Office of Patent Legal Administration at 571-272-7702.

UNITED STATES PATENT AND TRADEMARK OFFICE

UNITED STATES DEPARTMENT OF COMMERCE
United States Patent and Trademark Office
Address: COMMISSIONER FOR PATENTS
P.O. Box 1450
Alexandria, Virginia 22313-1450
www.uspto.gov

FINNEGAN, HENDERSON, FARABOW, GARRETT & DUNNER LLP
901 NEW YORK AVENUE, NW
WASHINGTON, DC 20001-4413

Mail Date: 04/21/2010

Applicant	: Jun Yokobori	: DECISION ON REQUEST FOR
Patent Number	: 7603072	: RECALCULATION of PATENT
Issue Date	: 10/13/2009	: TERM ADJUSTMENT IN VIEW
Appliction No	: 11/410,134	: OF WYETH AND NOTICE OF INTENT TO
Filed	: 04/25/2006	: ISSUE CERTIFICATE OF CORRECTION
		:

The Request for Recalculation is **GRANTED** to the extent indicated.

The patent term adjustment has been determined to be **570** days. The USPTO will *sua sponte* issue a certificate of correction reflecting the amount of PTA days determined by the recalculation.

Prior to the issuance of the certificate of correction, the USPTO will afford patentee an opportunity to be heard and request reconsideration. Accordingly, patentee has **one month or thirty (30) days**, whichever is longer, to file a request for reconsideration of this patent term adjustment calculation. See 35 U.S.C. 154(b)(3)(B)(ii) and 37 CFR 1.322(a)(4). No extensions of time will be granted under 37 CFR 1.136.

Patentee should use document code PET.OP if electronically filing a request for reconsideration of this patent term adjustment calculation. The patentee must also include the information required by 37 CFR 1.705(b)(2) and the fee required by 37 CFR 1.18(e). If patentee does not file a timely request for reconsideration of this patent term adjustment calculation including the information required by 37 CFR 1.705(b)(2) and the fee required by 37 CFR 1.18(e), the USPTO will issue a certificate of correction reflecting the PTA determination noted above.

Patentee should be aware that in order to preserve the right to review in the United States District Court for the District of Columbia of the USPTO patent term adjustment determination, patentee must ensure that he or she also take the steps required under 35 U.S.C. 154(b)(4)(A) in a timely manner. Nothing in the request for recalculation should be construed as providing an alternative time frame for commencing a civil action under 35 U.S.C. 154(b)(4)(A).

Any questions concerning this decision should be directed to the Office of Patent Legal Administration at 571-272-7702.

UNITED STATES PATENT AND TRADEMARK OFFICE

UNITED STATES DEPARTMENT OF COMMERCE
United States Patent and Trademark Office
Address: COMMISSIONER FOR PATENTS
P.O. Box 1450
Alexandria, Virginia 22313-1450
www.uspto.gov

APPLICATION NO.	FILING DATE	FIRST NAMED INVENTOR	ATTORNEY DOCKET NO.	CONFIRMATION NO.
11/410,137	04/25/2006	Katsuo Iwata	290396US2SX	3111

7590 06/04/2008

OBLON, SPIVAK, MCCLELLAND MAIER & NEUSTADT, P.C.
1940 DUKE STREET
ALEXANDRIA, VA 22314

EXAMINER	
NGUYEN, HOA T	

ART UNIT	PAPER NUMBER
2627	

NOTIFICATION DATE	DELIVERY MODE
06/04/2008	ELECTRONIC

DECISION GRANTING PETITION UNDER 37 CFR 1.138(d)

The declaration of express abandonment is recognized

This is in response to the petition under 37 CFR 1.138(d), requesting for a refund of any previously paid search fee and excess claims fee in the above-identified application.

The petition is granted.

The express abandonment is recognized. Any previously paid search fee and excess claims fee are hereby refunded.

Telephone inquiries should be directed to the Office of Data Management at (571) 272-4200.

Patent Publication Branch
Office of Data Management

Refund Ref:
06/03/2008 0030056431

Credit Card Refund Total: $500.00

Am Exp..: XXXXXXXXXXX1007

Adjustment date: 06/03/2008 NFARMER
04/26/2006 HGUTEMA1 00000071 11410137
02 FC:1111 -500.00 OP

UNITED STATES PATENT AND TRADEMARK OFFICE

UNITED STATES DEPARTMENT OF COMMERCE
United States Patent and Trademark Office
Address: COMMISSIONER FOR PATENTS
P.O. Box 1450
Alexandria, Virginia 22313-1450
www.uspto.gov

STAAS & HALSEY LLP
SUITE 700
1201 NEW YORK AVENUE, N.W.
WASHINGTON, DC 20005

Mail Date: 04/21/2010

Applicant	: Akihiro Takagi	: DECISION ON REQUEST FOR
Patent Number	: 7639213	: RECALCULATION of PATENT
Issue Date	: 12/29/2009	: TERM ADJUSTMENT IN VIEW
Appliction No	: 11/410,154	: OF WYETH AND NOTICE OF INTENT TO
Filed	: 04/25/2006	: ISSUE CERTIFICATE OF CORRECTION
		:

The Request for Recalculation is **GRANTED** to the extent indicated.

The patent term adjustment has been determined to be **869** days. The USPTO will *sua sponte* issue a certificate of correction reflecting the amount of PTA days determined by the recalculation.

Prior to the issuance of the certificate of correction, the USPTO will afford patentee an opportunity to be heard and request reconsideration. Accordingly, patentee has **one month or thirty (30) days**, whichever is longer, to file a request for reconsideration of this patent term adjustment calculation. See 35 U.S.C. 154(b)(3)(B)(ii) and 37 CFR 1.322(a)(4). No extensions of time will be granted under 37 CFR 1.136.

Patentee should use document code PET.OP if electronically filing a request for reconsideration of this patent term adjustment calculation. The patentee must also include the information required by 37 CFR 1.705(b)(2) and the fee required by 37 CFR 1.18(e). If patentee does not file a timely request for reconsideration of this patent term adjustment calculation including the information required by 37 CFR 1.705(b)(2) and the fee required by 37 CFR 1.18(e), the USPTO will issue a certificate of correction reflecting the PTA determination noted above.

Patentee should be aware that in order to preserve the right to review in the United States District Court for the District of Columbia of the USPTO patent term adjustment determination, patentee must ensure that he or she also take the steps required under 35 U.S.C. 154(b)(4)(A) in a timely manner. Nothing in the request for recalculation should be construed as providing an alternative time frame for commencing a civil action under 35 U.S.C. 154(b)(4)(A).

Any questions concerning this decision should be directed to the Office of Patent Legal Administration at 571-272-7702.

UNITED STATES PATENT AND TRADEMARK OFFICE

Commissioner for Patents
United States Patent and Trademark Office
P.O. Box 1450
Alexandria, VA 22313-1450
www.uspto.gov

BORIS LESCHINSKY
P.O. BOX 72
WALDWICK, NJ 07463

COPY MAILED

JUN 0 5 2006

OFFICE OF PETITIONS

In re Application of	:	
Sarvazyan, Armen P.	:	
Application No. 11/410,178	:	ON PETITION
Filed: April 24, 2006	:	
Attorney Docket No. AL-14	:	

This is a decision on the petition under 37 CFR 1.102(c)(1), filed April 24, 2006, to make the above-identified application special based on applicant's age as set forth in M.P.E.P. § 708.02, Section IV.

The petition is **GRANTED**.

A grantable petition to make an application special under 37 CFR 1.102(c)(1) and MPEP § 708.02, Section IV: Applicant's Age must be accompanied by evidence showing that at least one of the applicants is 65 years of age, or more, such as a birth certificate or a statement by applicant. No fee is required.

The instant petition includes a statement from the applicant, Armen P. Sarvazyan. Accordingly, the above-identified application has been accorded "special" status.

Telephone inquiries concerning this decision should be directed to the undersigned at 571-272-3206. All other inquiries concerning either the examination or status of the application should be directed to the Technology Center.

This matter is being referred to the Technology Center Art Unit 3737 for action on the merits commensurate with this decision.

Liana Chase
Petitions Examiner
Office of Petitions

UNITED STATES PATENT AND TRADEMARK OFFICE

Commissioner for Patents
United States Patent and Trademark Office
P.O. Box 1450
Alexandria, VA 22313-1450
www.uspto.gov

PHILIP S. JOHNSON
JOHNSON & JOHNSON
ONE JOHNSON & JOHNSON PLAZA
NEW BRUNSWICK NJ 08933-7003

COPY MAILED

AUG 21 2007

OFFICE OF PETITIONS

In re Application of
Grishaber, et al.
Application No. 11/410,180
Filed: April 24, 2006
Attorney Docket No. CRD5199USNP
For: METHOD FOR MEASURING DEFORMATIONS IN TEST SPECIMENS AND A SYSTEM FOR MARKING THE TEST SPECIMENS

ON PETITION

This is a decision on the petition under 37 CFR 1.137(b), filed March 14, 2007, to revive the above-identified application.

The petition under 37 CFR 1.137(b) is **GRANTED**.

This application became abandoned for failure to timely reply to the Notice to File Missing Parts of Application mailed May 17, 2006, which set a two month shortened statutory period for reply. No extensions of time having been obtained pursuant to 37 CFR 1.136(a) and no reply being received in the Office, this application became abandoned on July 18, 2006. A Notice of Abandonment was mailed on January 19, 2007.

Applicants have submitted a proper reply to the May 17, 2006 Notice in the form of an executed declaration and authorization to charge the $130.00 surcharge to applicants' deposit account, an acceptable statement of the unintentional nature of the delay in responding to the May 17, 2006 Notice, and authorization to charge the $1,500.00 petition fee to applicants' deposit account. $1,630.00 is being charged to applicants' deposit account. Accordingly, the petition under 37 CFR 1.137(b) is granted.

After the mailing of this decision, the file will be returned to the Office of Initial Patent Examination for further processing.

Telephone inquiries concerning this matter may be directed to the undersigned at (571) 272-3230.

Shirene Willis Brantley
Senior Petitions Attorney
Office of Petitions

UNITED STATES PATENT AND TRADEMARK OFFICE

UNITED STATES DEPARTMENT OF COMMERCE
United States Patent and Trademark Office
Address: COMMISSIONER FOR PATENTS
P.O. Box 1450
Alexandria, Virginia 22313-1450
www.uspto.gov

APPLICATION NUMBER	FILING OR 371 (c) DATE	FIRST NAMED APPLICANT	ATTORNEY DOCKET NUMBER
11/410,180	04/24/2006	Randy-David Burce Grishaber	CRD5199USNP

CONFIRMATION NO. 3529
FORMALITIES LETTER

000027777
PHILIP S. JOHNSON
JOHNSON & JOHNSON
ONE JOHNSON & JOHNSON PLAZA
NEW BRUNSWICK, NJ 08933-7003

Date Mailed: 05/17/2006

NOTICE TO FILE MISSING PARTS OF NONPROVISIONAL APPLICATION

FILED UNDER 37 CFR 1.53(b)

Filing Date Granted

Items Required To Avoid Abandonment:

An application number and filing date have been accorded to this application. The item(s) indicated below, however, are missing. Applicant is given **TWO MONTHS** from the date of this Notice within which to file all required items and pay any fees required below to avoid abandonment. Extensions of time may be obtained by filing a petition accompanied by the extension fee under the provisions of 37 CFR 1.136(a).

- The oath or declaration is unsigned.

The applicant needs to satisfy supplemental fees problems indicated below.

The required item(s) identified below must be timely submitted to avoid abandonment:

- To avoid abandonment, a surcharge (for late submission of filing fee, search fee, examination fee or oath or declaration) as set forth in 37 CFR 1.16(f) of $130 for a non-small entity, must be submitted with the missing items identified in this letter.

SUMMARY OF FEES DUE:

Total additional fee(s) required for this application is **$130** for a Large Entity

- **$130** Surcharge.

Replies should be mailed to: Mail Stop Missing Parts
Commissioner for Patents
P.O. Box 1450
Alexandria VA 22313-1450

UNITED STATES PATENT AND TRADEMARK OFFICE

UNITED STATES DEPARTMENT OF COMMERCE
United States Patent and Trademark Office
Address: COMMISSIONER FOR PATENTS
P.O. Box 1450
Alexandria, Virginia 22313-1450
www.uspto.gov

APPLICATION NUMBER	FILING OR 371(C) DATE	FIRST NAMED APPLICANT	ATTY. DOCKET NO./TITLE
11/410,180	04/24/2006	Randy-David Burce Grishaber	CRD5199USNP

CONFIRMATION NO. 3529

27777
PHILIP S. JOHNSON
JOHNSON & JOHNSON
ONE JOHNSON & JOHNSON PLAZA
NEW BRUNSWICK, NJ 08933-7003

RECEIVED
JAN 24 2007
J&J PAT. DKT. SECTION

ABANDONMENT/TERMINATION LETTER

Date Mailed: 01/19/2007

NOTICE OF ABANDONMENT UNDER 37 CFR 1.53 (f) OR (g)

The above-identified application is abandoned for failure to timely or properly reply to the Notice to File Missing Parts (Notice) mailed on 05/17/2006.

- No reply was received.

If a complete reply to the notice was previously filed by applicant within the time period set forth in the notice, applicant may request for reconsideration of the holding of abandonment within 2 months from the mailing of this notice of abandonment by filing a petition to withdraw the holding of abandonment under 37 CFR 1.181(a). No petition fee is required. The petition must be accompanied by a true copy of the originally filed reply and the item (s) identified in one of the following:

1. A properly itemized date-stamped postcard receipt (see MPEP § 503);

2. If the originally filed reply included a certificate of mailing or transmission in compliance with 37 CFR 1.8(a), a copy of the certificate of mailing or transmission and a statement in compliance with 37 CFR 1.8(b) (see MPEP § 512); or

3. If the reply was filed via Express Mail, a submission satisfying the requirements of 37 CFR 1.10(e) including, for example, a copy of the Express Mail mailing label showing the "date-in" (see MPEP § 513).

Any petition to withdraw the holding of abandonment should be directed to OIPE.

If applicant did not previously file a complete reply within the time period set forth in the notice, applicant may file a petition to revive the application under 37 CFR 1.137.

Under 37 CFR 1.137(a), a petition requesting the application be revived on the grounds of **UNAVOIDABLE DELAY** must be filed promptly after the applicant becomes aware of the abandonment and such petition must be accompanied by: (1) an adequate showing of the cause of unavoidable delay; (2) the required reply to the above-identified Notice; (3) the petition fee set forth in 37 CFR 1.17(l); and (4) a terminal disclaimer if required by 37 CFR 1.137(d). See MPEP § 711.03(c) and Form PTO/SB/61.

Under 37 CFR 1.137(b), a petition requesting the application be revived on the grounds of **UNINTENTIONAL DELAY** must be filed promptly after applicant becomes aware of the abandonment and such petition must be accompanied by: (1) a statement that the entire delay was unintentional; (2) the required reply to the above-

UNITED STATES PATENT AND TRADEMARK OFFICE

Commissioner for Patents
United States Patent and Trademark Office
P.O. Box 1450
Alexandria, VA 22313-1450
www.uspto.gov
DIW Oct-06

THE LIVINGSTON FIRM
963 TRAIL TERRACE DRIVE
NAPLES FL 34103

COPY MAILED

OCT 2 4 2006

OFFICE OF PETITIONS

In re Application of :
David L. Reed :
Application No. 11/410,181 : ON PETITION
Filed: 24 April, 2006 :
Atty Docket No. 06-5993/Div :

This is a decision on the paper filed on 21 July, 2006, which is treated as a petition under 37 CFR 1.53 requesting that the above-identified nonprovisional application be accorded a filing date of 24 April, 2006, with three (3) sheets of drawings as a part of the original disclosure.

The petition is **GRANTED** to the extent indicated.

On 24 April, 2006, the application was deposited without drawings.

On 5 June, 2006, Initial Patent Examination Division mailed a Notice of Incomplete Nonprovisional Application, stating that the application had been deposited without drawings, and that application should reconsider whether drawings were necessary under 35 U.S.C. § 113 (first sentence). The Notice stated that the filing date would be the date of receipt of the missing drawings.

In response, on 21 July, 2006, the present petition was filed, accompanied by three (3) sheets of drawings.

A review of the record reveals that no sheets of drawings are located among the application papers deposited on 24 April, 2006.

The argument and evidence supplied with the petition have been carefully considered, but are not persuasive. The USPTO has a well-established and well-publicized practice of providing a receipt for papers filed in the USPTO to any applicant desiring a receipt. The practice requires that any paper for which a receipt

is desired be filed in the USPTO with a self-addressed postcard identifying the paper. A postcard receipt which itemizes and properly identifies the papers which are being filed serves as prima facie evidence of receipt in the USPTO of all the items listed thereon on the date stamped thereon by the USPTO. See section 503, Manual of Patent Examining Procedure (MPEP 503). Unfortunately, petitioner's postcard receipt itemizes the filing of prior-filed Application No. 10/800,586 on 15 March, 2004, rather than the instant application. As such, the postcard receipt does not serve as evidence that the items listed therein were received in the USPTO on 24 April, 2006. If petitioner has a copy of the postcard receipt for this application with a USPTO "Office date" stamp of 24 April, 2006, for the instant application, a copy of that postcard should be submitted with any renewed petition.

Nevertheless, it has been PTO practice to treat an application that contains at least one process or method claim as an application for which a drawing is not necessary for an understanding of the invention under 35 U.S.C. 113 (first sentence).[1] A review of the record reveals that Claims 22 and 23 are method claims. Therefore, the present application is deemed to be an application which does not require a drawing for an understanding of the invention. Accordingly, the application, as filed, is entitled to a filing date.

Since the petition was necessitated by an error on the part of the USPTO, no petition fee is necessary.

The "Notice of Incomplete Nonprovisional Application" mailed on 5 June, 2006, was sent in error and is hereby vacated.

The application will processed and examined using the papers filed on 24 April, 2006. The copy of three (3) sheets of drawings filed with the present petition will not be used for processing or examination, but will be retained in the application file.

Petitioners may wish to file the drawings as a preliminary amendment. If the drawings are filed as a preliminary amendment, the amendment will be reviewed by the examiner for new matter.

1

MPEP 601.01(f).

The application is being referred to Initial Patent Examination Division for further processing with a filing date of 24 April, 2006, using only the application papers filed on that date.

Telephone inquiries specific to this matter should be directed to the undersigned at 571 272-3231.

D Wood

Douglas I. Wood
Senior Petitions Attorney
Office of Petitions

UNITED STATES PATENT AND TRADEMARK OFFICE

Commissioner for Patents
United States Patent and Trademark Office
P.O. Box 1450
Alexandria, VA 22313-1450
www.uspto.gov

STEPTOE & JOHNSON LLP
1330 CONNECTICUT AVENUE, N.W.
WASHINGTON DC 20036

MAILED

JUL 16 2010

OFFICE OF PETITIONS

In re Patent of Friedman et al	:	DECISION ON REQUEST
Patent No. 7,619,079	:	FOR RECONSIDERATION OF
Issue Date: November 17, 2009	:	PATENT TERM ADJUSTMENT
Application No. 11/410,186	:	and
Filed: April 24, 2006	:	NOTICE OF INTENT TO ISSUE
Atty. Docket No. 16454.0016 D1	:	CERTIFICATE OF CORRECTION

This is a decision on the petition filed on January 13, 2010, which is being treated as a petition under 37 CFR 1.705(d) requesting that the patent term adjustment indicated on the above-identified patent be corrected to indicate that the term of the above-identified patent is extended or adjusted by four hundred thirteen (413) days.

The petition to correct the patent term adjustment indicated on the above-identified patent to indicate that the term of the above-identified patent is extended or adjusted by four hundred thirteen (413) is **GRANTED**.

The Office acknowledges submission of the $200.00 fee set forth in 37 CFR 1.18(e). No additional fees are required.

The application is being forwarded to the Certificates of Correction Branch for issuance of a certificate of correction. The Office will issue a certificate of correction indicating that the term of the above-identified patent is extended or adjusted by **four hundred thirteen (413)** days.

Telephone inquiries specific to this decision should be directed to the undersigned at (571) 272-3230.

Shirene Willis Brantley

Shirene Willis Brantley
Senior Petitions Attorney
Office of Petitions

Enclosure: Copy of DRAFT Certificate of Correction

UNITED STATES PATENT AND TRADEMARK OFFICE

CERTIFICATE OF CORRECTION

PATENT : 7,619,079 B2

DATED : **November 17, 2009** **DRAFT**

INVENTOR(S) : Friedman et al.

It is certified that error appears in the above-identified patent and that said Letters Patent is hereby corrected as shown below:

On the cover page,

[*] Notice: Subject to any disclaimer, the term of this patent is extended or adjusted under 35 U.S.C. 154(b) by 211 days

Delete the phrase "by 211 days" and insert – by 413 days--

UNITED STATES PATENT AND TRADEMARK OFFICE

Commissioner for Patents
United States Patent and Trademark Office
P.O. Box 1450
Alexandria, VA 22313-1450
www.uspto.gov

MAILED

JUN 28 2010

OFFICE OF PETITIONS

COOK ALEX LTD
SUITE 2850
200 WEST ADAMS STREET
CHICAGO IL 60606

In re Patent No. 7,623,091 : DECISION ON REQUEST
Hideaki Shishido et al : FOR
Issue Date: November 24, 2009 : RECONSIDERATION OF
Application No. 11/410,198 : PATENT TERM ADJUSTMENT
Filed: April 24, 2006 : and
Atty Docket No. **0553-0497** : NOTICE OF INTENT TO ISSUE
: CERTIFICATE OF CORRECTION

This is a decision on the petition filed on January 14, 2010, which is being treated as a petition under 37 CFR 1.705(d) requesting that the patent term adjustment indicated on the above-identified patent be corrected to indicate that the term of the above-identified patent is extended or adjusted by eight hundred and sixty-nine (869) days.

The petition to correct the patent term adjustment indicated on the above-identified patent to indicate that the term of the above-identified patent is extended or adjusted by eight hundred and sixty-nine (869) days is **GRANTED**.

Deposit account 50-1039 will be charged $200.00 for the fee set forth in 37 CFR 1.18(e). No additional fees are required.

The Office will *sua sponte* issue a certificate of correction. Pursuant to 37 CFR 1.322, the Office will not issue a certificate of correction without first providing assignee or patentee an opportunity to be heard. Accordingly, patentee is given **one (1) month or thirty (30) days**, whichever is longer, from the mail date of this decision to respond. No extensions of time will be granted under § 1.136.

The application is being forwarded to the Certificates of Correction Branch for issuance of a certificate of correction. The Office will issue a certificate of correction indicating that the term of the above-identified patent is extended or adjusted by **eight hundred and sixty-nine (869) days.**

Telephone inquiries specific to this matter should be directed to the undersigned, at (571) 272-3222.

/Kenya A. McLaughlin/

Kenya A. McLaughlin
Petitions Attorney
Office of Petitions

Enclosure: Copy of DRAFT Certificate of Correction

DRAFT COPY

UNITED STATES PATENT AND TRADEMARK OFFICE

CERTIFICATE OF CORRECTION

PATENT : 7,623,091 B2

DATED : Nov. 24, 2009

INVENTOR(S) : Shishido

It is certified that error appears in the above-identified patent and that said Letters Patent is hereby corrected as shown below:

On the cover page,

[*] Notice: Subject to any disclaimer, the term of this patent is extended or adjusted under 35 USC 154(b) by (655) days

Delete the phrase "by 655 days" and insert – by 869 days--

UNITED STATES PATENT AND TRADEMARK OFFICE

COPY MAILED

MAR 3 0 2007

OFFICE OF PETITIONS

Commissioner for Patents
United States Patent and Trademark Office
P.O. Box 1450
Alexandria, VA 22313-1450
www.uspto.gov

REED SMITH LLP
3110 FAIRVIEW PARK DRIVE, SUITE 1400
FALLS CHURCH, VA 22042

RECEIVED
CANCELLED
MAR 30 2007
OFFICE OF PETITIONS

In re Application of	:	
Seiichi **HIGAKI**, et al.	:	
Application No. 11/410,210	:	DECISION GRANTING PETITION
Filed: April 25, 2006	:	UNDER 37 CFR 1.313(c)(2)
Attorney Docket No. WILL.0050	:	

This is a decision on the petition under 37 CFR 1.313(c)(2), filed March 19, 2007 and re-submitted March 26, 2007, to withdraw the above-identified application from issue after payment of the issue fee.

The petition is **GRANTED**.

The above-identified application is withdrawn from issue for consideration of a submission under 37 CFR 1.114 (request for continued examination). *See* 37 CFR 1.313(c)(2).

Petitioner is advised that the issue fee paid on March 8, 2007 cannot be refunded. If, however, this application is again allowed, petitioner may request that it be applied towards the issue fee required by the new Notice of Allowance.[1]

Telephone inquiries should be directed to Monica A. Graves at (571) 272-7253.

This application is being referred to Technology Center AU 2187 for processing of the request for continued examination under 37 CFR 1.114 and for consideration of the concurrently filed amendment.

Frances Hicks
Petitions Office
Office of Petitions

[1] *The request to apply the issue fee to the new Notice may be satisfied by completing and returning the new Part B – Fee(s) Transmittal Form (along with any balance due at the time of submission). Petitioner is advised that the Issue Fee Transmittal Form must be completed and timely submitted to avoid abandonment of the application.*

UNITED STATES PATENT AND TRADEMARK OFFICE

Commissioner for Patents
United States Patent and Trademark Office
P.O. Box 1450
Alexandria, VA 22313-1450
www.uspto.gov

NORMAN E. LEHRER, ESQUIRE
NORMAN E. LEHRER, P.C.
1205 NORTH KINGS HIGHWAY
CHERRY HILL NJ 08034

MAILED

JUN 28 2010

OFFICE OF PETITIONS

In re Application of	:	
Stacy Cassel et al.	:	
Application No. 11/410,238	:	DECISION ON PETITION
Filed: April 24, 2006	:	TO WITHDRAW
Attorney Docket No. 6481	:	FROM RECORD
	:	

This is a decision on the Request to Withdraw as attorney or agent of record under 37 C.F.R. § 1.36(b), filed June 22, 2010.

The request is **APPROVED**.

A grantable request to withdraw as attorney/agent of record must be signed by every attorney/agent seeking to withdraw or contain a clear indication that one attorney is signing on behalf of another/others. A request to withdraw will not be approved unless at least 30 (thirty) days would remain between the date of approval and the later of the expiration date of a time to file a response or the expiration date of the maximum time period which can be extended under 37 C.F.R. § 1.136(a).

The request was signed by Vanitha M. Elgart, former attorney/agent associated with customer number 34678. Vanitha M. Elgart has been withdrawn. All other attorneys/agents will remain of record.

The correspondence address will remain the same until further notified by applicant.

Telephone inquiries concerning this decision should be directed to Kimberly Inabinet at 571-272-4618.

/Kimberly Inabinet/

Kimberly Inabinet
Petitions Examiner
Office of Petitions

UNITED STATES PATENT AND TRADEMARK OFFICE

COMMISSIONER FOR PATENTS
UNITED STATES PATENT AND TRADEMARK OFFICE
P.O. BOX 1450
ALEXANDRIA, VA 22313-1450
www.uspto.gov
DIW Nov-06

KENYON & KENYON LLP
1500 K STREET N.W.
SUITE 700
WASHINGTON DC 20005

COPY MAILED
NOV 16 2006
OFFICE OF PETITIONS

In re Application of	:
Clark et al.	: DECISION NOTING JOINDER OF
Application No. 11/410,279	: INVENTOR AND PETITION
Filed: 25 April, 2006	: UNDER 37 CFR 1.47(a) MOOT
Atty Dckt No. 12953/100126	:

This is a decision in reference to the petition under 37 CFR 1.47(a) filed on 13 September, 2006.

On 17 August, 2006, in response to the Notice to File Missing Parts of Nonprovisional Application mailed on 17 May, 2006, petitioners filed a declaration signed by all joint inventors except non-signing joint inventor Peter Feinberg, accompanied by a one (1) month extension of time. A petition under 37 CFR 1.47(a) was also filed.

It is noted that 13 September, 2006, petitioners filed a Declaration signed by the previously non-signing inventor, Peter Feinberg, in compliance with 37 CFR 1.63.

In view of the joinder of the inventor, consideration under 37 CFR 1.47(a) is moot; this application does not have any rule 1.47(a) status and no such status should appear on the file wrapper. This application need not be returned to this office for any further consideration under 37 CFR 1.47(a).

The petition is dismissed as moot. As the fully executed declaration was received prior to treatment of the Rule 47 petition on the merits, the petition fee will be credited to counsel's deposit account.

This application will be referred to the Office of Initial Patent Examination for further processing.

Telephone inquiries related to this decision should be directed to the undersigned at (571) 272-3231.

Douglas I. Wood
Senior Petitions Attorney
Office of Petitions

UNITED STATES PATENT AND TRADEMARK OFFICE

Commissioner for Patents
United States Patent and Trademark Office
P.O. Box 1450
Alexandria, VA 22313-1450
www.uspto.gov

STERNE KESSLER GOLDSTEIN & FOX PLLC
1100 NEW YORK AVENUE, N.W.
WASHINGTON, DC 20005

MAILED

APR 27 2009

OFFICE OF PETITIONS

In re Application of :
Christian Waldraff et al :
Application No. 11/410,295 : DECISION ON PETITION
Filed: April 25, 2006 :
Attorney Docket No. 2400.0340000/VLC/BAH :

This is a decision on the petition, filed April 9, 2009, which is being treated as a petition under 37 CFR 1.8(b), requesting withdrawal of the holding of abandonment in the above-identified application.

The petition is **GRANTED**.

This application was held abandoned for failure to timely respond to the Office action of August 21, 2008, which set a three (3) month shortened statutory period for reply. Three-month (3) extension of time pursuant to the provisions of 37 CFR 1.136(a) was obtained. Accordingly, a reply was due on or before February 21, 2009.

Petitioner states "Since the deadline for filing a reply expired on a Saturday, February 21, 2009, Applicants were within the parameters of 37 C.F.R. § 1.7(a) and the documents filed on Monday, February 23, 2009, should be considered by the Patent Office as being timely filed."

The petition satisfies the above requirements of 37 CFR 1.8(b). Accordingly, the holding of abandonment for failure to timely file a reply to the Office action of August 21, 2008 is hereby withdrawn and the application restored to pending status.

This application is being referred to Technology Center AU 1626 for appropriate action in the normal course of business on the reply received with petition.

Irvin Dingle
Petitions Examiner
Office of Petitions

UNITED STATES PATENT AND TRADEMARK OFFICE

Commissioner for Patents
United States Patent and Trademark Office
P.O. Box 1450
Alexandria, VA 22313-1450
www.uspto.gov

LEE & MORSE, P.C.
3141 FAIRVIEW PARK DRIVE
SUITE 500
FALLS CHURCH, VA 22042

COPY MAILED
NOV 01 2006
OFFICE OF PETITIONS

In re Application of Kwang Su Kim :
Application No. 11/410,307 : Decision Refusing to Accord
Filed: April 25, 2006 : Status Under 37 CFR 1.47(b)
Attorney Docket No. 303/006 :
For: Cylindrical Battery :

This is in response to the petition under 37 CFR 1.47(b), filed July 17, 2006.

The petition is **dismissed**.

Any request for reconsideration of this decision must be submitted within TWO (2) MONTHS from the mail date of this decision. Extensions of time under 37 CFR 1.136(a) are permitted. No further petition fee is required for the request. Any response should be entitled "Request for Reconsideration of Petition Under 37 CFR 1.47(b)" and may include an oath or declaration executed by the current non-signing inventor(s). **Failure to respond will result in abandonment of the application.**

A grantable petition under 37 CFR 1.47(b) requires:

(1) proof that the non-signing inventor cannot be found or reached after diligent effort or that the inventor refused to sign the declaration after having been presented with the application papers (specification, claims, and drawings),
(2) an acceptable oath or declaration;
(3) the petition fee;
(4) a statement of the last known address of the non-signing inventor;
(5) proof of proprietary interest; and
(6) proof of irreparable damage.

Applicant lacks items (1), (4), and (5) set forth above.

As to item (1), petitioner has failed to prove the inventor cannot be found or reached after diligent effort. Petitioner has determined the non-signing inventor has changed addresses. Petitioner has tried calling the last known cellular phone number for the non-signing inventor, but service to the cell phone was disconnected. Petitioner has tried calling the last known home phone number for the non-signing inventor, but has failed to reach the inventor or any other party. Petitioner has not verified the last known home phone number is still correct.

Petitioner has established the non-signing inventor changed his home address. However, petitioner has failed to discuss any steps taken to find a new home address.

Petitioner has determined the old cell phone number for the non-signing inventor is no longer working. Petitioner does not know if the last known home phone number is still working. However, petitioner has failed to discuss any steps taken to determine a current telephone number for the non-signing inventor.

The assignee has determined the last known information for the non-signing inventor is incorrect without taking steps to determine the correct information. For example, were steps taken to contact directory assistance to determine a new telephone number for the inventor?

Even if the petition included adequate steps to find the non-signing inventor, the petition could not be granted because statements by Taesun Kim are not statements of someone with firsthand knowledge of pertinent events. The petition fails to indicate Taesun Kim was the individual who sent the cited letters to the non-signing inventor. The petition fails to indicate Taesun Kim was the individual who made all the telephone calls referenced by petitioner.

As to item (4), a statement of the inventor's last known address is missing and is required. Taesun Kim provides a last known residential and post office address for the non-signing inventor and a last known home address. The two addresses are different. The petition fails to provide any reason for the last known residential address differing from the last known home address. Any request for reconsideration should provide a single last known address for the non-signing inventor.

As to item (5), the petition fails to establish Rule 47 applicant has sufficient proprietary interest in the subject matter to justify the filing of the application. In requesting reconsideration, acceptable forms of proof may include:

(a) a copy of an employment agreement between the non-signing inventor and the Rule 47(b) applicant (company) which covers the invention,
(b) a copy of an assignment agreement showing that the invention disclosed in the application is assigned to the Rule 47(b) applicant, or
(c) a legal memorandum signed by an attorney familiar with the law of the jurisdiction stating that a court of competent jurisdiction would by the weight of authority in that jurisdiction award the title of the invention to the Rule 47(b) applicant.

Petitioner states an employment agreement was signed by the non-signing inventor. However, a copy of the agreement has not been filed. Petitioner states Samsung is the assignee. However, a copy of an assignment has not been filed.

Further correspondence with respect to this matter should be addressed as follows:

By mail: Mail Stop Petition
Commissioner for Patents
P.O. Box 1450
Alexandria, VA 22313-1450

By facsimile: (571) 273-8300
Attn: Office of Petitions

By hand: U.S. Patent and Trademark Office
Customer Service Window
Randolph Building
401 Dulany Street
Alexandria, VA 22314

Telephone inquiries regarding this communication should be directed to Petitions Attorney Steven Brantley at (571) 272-3203.

Charles Steven Brantley
Senior Petitions Attorney
Office of Petitions

UNITED STATES PATENT AND TRADEMARK OFFICE

UNITED STATES DEPARTMENT OF COMMERCE
United States Patent and Trademark Office
Address: COMMISSIONER FOR PATENTS
P.O. Box 1450
Alexandria, Virginia 22313-1450
www.uspto.gov

APPLICATION NO.	FILING DATE	FIRST NAMED INVENTOR	ATTORNEY DOCKET NO.	CONFIRMATION NO.
11/410,312	04/25/2006	Yeon Woo Park	8737.062.00	2744

30827 7590 03/21/2008
MCKENNA LONG & ALDRIDGE LLP
1900 K STREET, NW
WASHINGTON, DC 20006

EXAMINER	
CHOW, DOON Y	
ART UNIT	PAPER NUMBER
2173	

MAIL DATE	DELIVERY MODE
03/21/2008	PAPER

Please find below and/or attached an Office communication concerning this application or proceeding.

The time period for reply, if any, is set in the attached communication.

UNITED STATES PATENT AND TRADEMARK OFFICE

Commissioner for Patents
United States Patent and Trademark Office
P.O. Box 1450
Alexandria, VA 22313-1450
www.uspto.gov

MAILED

MAR 2 1 2008

TECHNOLOGY CENTER 2100

MCKENNA LONG & ALDRIDGE LLP
1900 K STREET, NW
WASHINGTON DC 20006

In re Application of: Yeon Woo PARK
Application No. 11/410,312
Filed: April 25, 2006
For: MOBILE TERMINAL PROVIDING GRAPHIC USER INTERFACE AND METHOD OF PROVIDING GRAPHIC USER INTERFACE USING THE SAME

DECISION ON REQUEST TO PARTICIPATE IN PATENT PROSECUTION HIGHWAY PILOT PROGRAM AND PETITION TO MAKE SPECIAL UNDER 37 CFR 1.102(d)

This is a decision on the request to participate in the Patent Prosecution Highway (PPH) pilot program and the petition under 37 CFR 1.102(d), filed March 10, 2008 to make the above-identified application special.

The request and petition are GRANTED.

A grantable request to participate in the PPH pilot program and petition to make special require:

(1) The U.S. application must validly claim priority under 35 U.S.C. 119(a) to one or more applications filed in the KIPO;

(2) Applicant must submit a copy of the allowable/patentable claim(s) from the KIPO application(s) along with an English translation thereof and a statement that the English translation is accurate;

(3) All the claims in the U.S. application must sufficiently correspond or be amended to sufficiently correspond to the allowable/patentable claim(s) in the KIPO application(s);

(4) Examination of the U.S. application has not begun;

(5) Applicant must submit a copy of all the office actions from each of the KIPO application(s) containing the allowable/patentable claim(s) along with an English translation thereof and a statement that the English translation is accurate;

(6) Applicant must submit an IDS listing the documents cited by the KIPO examiner in the KIPO office action along with copies of documents except U.S. patents or U.S. patent application publications; and

(7) The required petition fee under 37 CFR 1.17(h).

The request to participate in the PPH pilot program and petition comply with the above requirements. Accordingly, the above-identified application has been accorded "special" status.

Telephone inquiries concerning this decision should be directed to Mano Padmanabhan at 571-272-4210.

All other inquiries concerning the examination or status of the application is accessible in the PAIR system at http://www.uspto.gov/ebc/index.html.

The application is being forwarded to the examiner for action on the merits commensurate with this decision.

Mano Padmanabhan
Quality Assurance Specialist, Technology Center 2100, Workgroup 2180
571-272-4210

UNITED STATES PATENT AND TRADEMARK OFFICE

UNITED STATES DEPARTMENT OF COMMERCE
United States Patent and Trademark Office
Address: COMMISSIONER FOR PATENTS
P.O. Box 1450
Alexandria, Virginia 22313-1450
www.uspto.gov

APPLICATION NO.	FILING DATE	FIRST NAMED INVENTOR	ATTORNEY DOCKET NO.	CONFIRMATION NO.
11/410,318	04/24/2006	Calvin T. Treat	G06-NP2899	2736

30279 7590 06/13/2008

DANA REWOLDT
GARST SEED COMPANY
2369 330TH STREET
PO BOX 500
SLATER, IA 50244

EXAMINER	
COLLINS, CYNTHIA E	

ART UNIT	PAPER NUMBER
1638	

MAIL DATE	DELIVERY MODE
06/13/2008	PAPER

Please find below and/or attached an Office communication concerning this application or proceeding.

The time period for reply, if any, is set in the attached communication.

UNITED STATES PATENT AND TRADEMARK OFFICE

Commissioner for Patents
United States Patent and Trademark Office
P.O. Box 1450
Alexandria, VA 22313-1450
www.uspto.gov

DANA REWOLDT
GARST SEED COMPANY
2369 330TH STREET
PO BOX 500
SLATER IA 50244

JUN 13 2008

In re Application of :
Treat et al.
Serial No.: 11/410,318
Filed: April 24, 2006
Attorney Docket No.: G06-NP2899

: PETITION DECISION

This is in response to the petition under 37 CFR § 1.59(b), filed June 9, 2008, to expunge information from the above identified application. This application has been allowed.

Petitioner requests that the Reply to Request for Information Under 37 CFR 1.105, and all attachments thereto, submitted to the Patent Office on November 7, 2007 be expunged from the record. Petitioner states either: (A) that the information contains trade secret material, proprietary material and/or material that is subject to a protective order which has not been made public; or (B) that the information submitted was unintentionally submitted and the failure to obtain its return would cause irreparable harm to the party who submitted the information or to the party in interest on whose behalf the information was submitted, and the information has not otherwise been made public. The petition fee set forth in 37 CFR § 1.17(g) has been paid.

The reasons set forth in this petition establishes to the satisfaction of the Director that expungement of the information is appropriate. The file entries for those documents have been closed and as such the documents are no longer publicly available, which is the IFW equivalent to removal of a paper document from a paper file wrapper. Also, as stated in M.P.E.P. 724, upon allowance or other action closing prosecution in an application, petition may be made for return of Proprietary information. As this application has been allowed, the information is being returned to applicant.

Therefore, applicants' petition is GRANTED.

Should there be any questions about this decision please contact Marianne C. Seidel by letter addressed to Director, TC 1600, at the address listed above, or by telephone at 571-272-0584 or by facsimile sent to the general Office facsimile number, 703-872-9306.

Marianne C. Seidel
Quality Assurance Specialist/Program Manager
Technology Center 1600

UNITED STATES PATENT AND TRADEMARK OFFICE

UNITED STATES DEPARTMENT OF COMMERCE
United States Patent and Trademark Office
Address: COMMISSIONER FOR PATENTS
P.O. Box 1450
Alexandria, Virginia 22313-1450
www.uspto.gov

RALPH E. JOCKE
Walker & Jocke
231 SOUTH BROADWAY
MEDINA, OH 44256

Mail Date: 04/21/2010

Applicant	: H. Thomas Graef	: DECISION ON REQUEST FOR
Patent Number	: 7611140	: RECALCULATION of PATENT
Issue Date	: 11/03/2009	: TERM ADJUSTMENT IN VIEW
Appliction No	: 11/410,347	: OF WYETH AND NOTICE OF INTENT TO
Filed	: 04/24/2006	: ISSUE CERTIFICATE OF CORRECTION
		:

The Request for Recalculation is **GRANTED** to the extent indicated.

The patent term adjustment has been determined to be **493** days. The USPTO will *sua sponte* issue a certificate of correction reflecting the amount of PTA days determined by the recalculation.

Prior to the issuance of the certificate of correction, the USPTO will afford patentee an opportunity to be heard and request reconsideration. Accordingly, patentee has **one month or thirty (30) days**, whichever is longer, to file a request for reconsideration of this patent term adjustment calculation. See 35 U.S.C. 154(b)(3)(B)(ii) and 37 CFR 1.322(a)(4). No extensions of time will be granted under 37 CFR 1.136.

Patentee should use document code PET.OP if electronically filing a request for reconsideration of this patent term adjustment calculation. The patentee must also include the information required by 37 CFR 1.705(b)(2) and the fee required by 37 CFR 1.18(e). If patentee does not file a timely request for reconsideration of this patent term adjustment calculation including the information required by 37 CFR 1.705(b)(2) and the fee required by 37 CFR 1.18(e), the USPTO will issue a certificate of correction reflecting the PTA determination noted above.

Patentee should be aware that in order to preserve the right to review in the United States District Court for the District of Columbia of the USPTO patent term adjustment determination, patentee must ensure that he or she also take the steps required under 35 U.S.C. 154(b)(4)(A) in a timely manner. Nothing in the request for recalculation should be construed as providing an alternative time frame for commencing a civil action under 35 U.S.C. 154(b)(4)(A).

Any questions concerning this decision should be directed to the Office of Patent Legal Administration at 571-272-7702.

UNITED STATES PATENT AND TRADEMARK OFFICE

UNITED STATES DEPARTMENT OF COMMERCE
United States Patent and Trademark Office
Address: COMMISSIONER FOR PATENTS
P.O. Box 1450
Alexandria, Virginia 22313-1450
www.uspto.gov

APPL NO.	FILING OR 371 (c) DATE	ART UNIT	FIL FEE REC'D	ATTY.DOCKET NO	DRAWINGS	TOT CLMS	IND CLMS
11/410,352	04/24/2006	2834	1250	SONY-31800	7	25	3

CONFIRMATION NO. 4057

Jonathan O. Owens
HAVERSTOCK & OWENS LLP
162 North Wolfe Road
Sunnyvale, CA 94086

CORRECTED FILING RECEIPT

OC000000019268628

Date Mailed: 06/14/2006

Receipt is acknowledged of this regular Patent Application. It will be considered in its order and you will be notified as to the results of the examination. Be sure to provide the U.S. APPLICATION NUMBER, FILING DATE, NAME OF APPLICANT, and TITLE OF INVENTION when inquiring about this application. Fees transmitted by check or draft are subject to collection. Please verify the accuracy of the data presented on this receipt. **If an error is noted on this Filing Receipt, please mail to the Commissioner for Patents P.O. Box 1450 Alexandria Va 22313-1450. Please provide a copy of this Filing Receipt with the changes noted thereon. If you received a "Notice to File Missing Parts" for this application, please submit any corrections to this Filing Receipt with your reply to the Notice. When the USPTO processes the reply to the Notice, the USPTO will generate another Filing Receipt incorporating the requested corrections (if appropriate).**

Applicant(s)

Jae-Hyeong Kim, San Ramon, CA;
Patrick T. Chuang, Cupertino, CA;
Chungji Lu, Sunnyvale, CA;

Assignment For Published Patent Application

Sony Corporation
Sony Electronics Inc.

Power of Attorney:

Thomas Haverstock--32571
Peter Toto--36293
Frederick Zustak--36728
Jonathan Owens--37902
Harold Fujii--38458
Jaime Siegel--39027
Mark Gorman--43641
Milton Frazier--44687
Christopher Allenby--45906
Hans Mahr--46138

Domestic Priority data as claimed by applicant

This appln claims benefit of 60/731,393 10/28/2005

Foreign Applications

If Required, Foreign Filing License Granted: 05/19/2006

The country code and number of your priority application, to be used for filing abroad under the Paris Convention, is US11/410,352

Projected Publication Date: 05/03/2007

Non-Publication Request: No

Early Publication Request: No

Title

Minimized line skew generator

Preliminary Class

310

PROTECTING YOUR INVENTION OUTSIDE THE UNITED STATES

Since the rights granted by a U.S. patent extend only throughout the territory of the United States and have no effect in a foreign country, an inventor who wishes patent protection in another country must apply for a patent in a specific country or in regional patent offices. Applicants may wish to consider the filing of an international application under the Patent Cooperation Treaty (PCT). An international (PCT) application generally has the same effect as a regular national patent application in each PCT-member country. The PCT process **simplifies** the filing of patent applications on the same invention in member countries, but **does not result** in a grant of "an international patent" and does not eliminate the need of applicants to file additional documents and fees in countries where patent protection is desired.

Almost every country has its own patent law, and a person desiring a patent in a particular country must make an application for patent in that country in accordance with its particular laws. Since the laws of many countries differ in various respects from the patent law of the United States, applicants are advised to seek guidance from specific foreign countries to ensure that patent rights are not lost prematurely.

Applicants also are advised that in the case of inventions made in the United States, the Director of the USPTO must issue a license before applicants can apply for a patent in a foreign country. The filing of a U.S. patent application serves as a request for a foreign filing license. The application's filing receipt contains further information and guidance as to the status of applicant's license for foreign filing.

Applicants may wish to consult the USPTO booklet, "General Information Concerning Patents" (specifically, the section entitled "Treaties and Foreign Patents") for more information on timeframes and deadlines for filing foreign patent applications. The guide is available either by contacting the USPTO Contact Center at 800-786-9199, or it can be viewed on the USPTO website at http://www.uspto.gov/web/offices/pac/doc/general/index.html.

For information on preventing theft of your intellectual property (patents, trademarks and copyrights), you may wish to consult the U.S. Government website, http://www.stopfakes.gov. Part of a Department of Commerce initiative, this website includes self-help "toolkits" giving innovators guidance on how to protect intellectual property in specific countries such as China, Korea and Mexico. For questions regarding patent enforcement issues, applicants may call the U.S. Government hotline at 1-866-999-HALT (1-866-999-4158).

LICENSE FOR FOREIGN FILING UNDER
Title 35, United States Code, Section 184
Title 37, Code of Federal Regulations, 5.11 & 5.15

GRANTED

The applicant has been granted a license under 35 U.S.C. 184, if the phrase "IF REQUIRED, FOREIGN FILING LICENSE GRANTED" followed by a date appears on this form. Such licenses are issued in all applications where

the conditions for issuance of a license have been met, regardless of whether or not a license may be required as set forth in 37 CFR 5.15. The scope and limitations of this license are set forth in 37 CFR 5.15(a) unless an earlier license has been issued under 37 CFR 5.15(b). The license is subject to revocation upon written notification. The date indicated is the effective date of the license, unless an earlier license of similar scope has been granted under 37 CFR 5.13 or 5.14.

This license is to be retained by the licensee and may be used at any time on or after the effective date thereof unless it is revoked. This license is automatically transferred to any related applications(s) filed under 37 CFR 1.53(d). This license is not retroactive.

The grant of a license does not in any way lessen the responsibility of a licensee for the security of the subject matter as imposed by any Government contract or the provisions of existing laws relating to espionage and the national security or the export of technical data. Licensees should apprise themselves of current regulations especially with respect to certain countries, of other agencies, particularly the Office of Defense Trade Controls, Department of State (with respect to Arms, Munitions and Implements of War (22 CFR 121-128)); the Bureau of Industry and Security, Department of Commerce (15 CFR parts 730-774); the Office of Foreign Assets Control, Department of Treasury (31 CFR Parts 500+) and the Department of Energy.

NOT GRANTED

No license under 35 U.S.C. 184 has been granted at this time, if the phrase "IF REQUIRED, FOREIGN FILING LICENSE GRANTED" DOES NOT appear on this form. Applicant may still petition for a license under 37 CFR 5.12, if a license is desired before the expiration of 6 months from the filing date of the application. If 6 months has lapsed from the filing date of this application and the licensee has not received any indication of a secrecy order under 35 U.S.C. 181, the licensee may foreign file the application pursuant to 37 CFR 5.15(b).

UNITED STATES PATENT AND TRADEMARK OFFICE

Commissioner for Patents
United States Patent and Trademark Office
P.O. Box 1450
Alexandria, VA 22313-1450
www.uspto.gov

LEO J. AUBEL
111 RIVERSHIRE LANE
LINCOLNSHIRE, IL 60069

COPY MAILED
AUG 1 8 2006
OFFICE OF PETITIONS

In re Application of	:	
Robert W. Beckwith	:	
Application No. 11/410,356	:	DECISION ON PETITION
Filed: April 25, 2006	:	TO MAKE SPECIAL UNDER
Attorney Docket No. P103	:	37 CFR 1.102(c)(1)
	:	

This is a decision on the petition under 37 CFR 1.102(c)(1), filed April 25, 2006, to make the above-identified application special based on applicant's age as set forth in M.P.E.P. § 708.02, Section IV.

The petition is **GRANTED**.

A grantable petition to make an application special under 37 CFR 1.102(c)(1) and MPEP § 708.02, Section IV: Applicant's Age must be accompanied by evidence showing that at least one of the applicants is 65 years of age, or more, such as a birth certificate or a statement by applicant. No fee is required

The instant petition includes a copy of Inventor Robert W. Beckwith's birth certificate showing that he is over 65 years of age. Accordingly, the above-identified application has been accorded "special" status.

Telephone inquiries concerning this decision should be directed to Irvin Dingle at 571-272-3210.

All other inquiries concerning either the examination or status of the application should be directed to the Technology Center.

The application is being forwarded to the Technology Center Art Unit 3663 for action on the merits commensurate with this decision.

Irvin Dingle
Petitions Examiner
Office of Petitions

UNITED STATES PATENT AND TRADEMARK OFFICE

Commissioner for Patents
United States Patent and Trademark Office
P.O. Box 1450
Alexandria, VA 22313-1450
www.uspto.gov

BELASCO, JACOBS & TOWNSLEY LLP
HOWARD HUGHES CENTER
6100 CENTER DRIVE
SUITE 630
LOS ANGELES, CA 90045

COPY MAILED
DEC 25 2007
OFFICE OF PETITIONS

In re Application of :
Robby Mott :
Application No.: 11/410,368 : ON PETITION
Filed: April 25, 2006 :
Attorney Docket No.: 06-119-B :

This is a decision on the petition filed November 21, 2007, which will be treated as a petition under 37 CFR 1.53.

The petition is **dismissed.**

The application was deposited on April 25, 2006. The application was accorded a filing date of April 25, 2006, however, a "Notice to File Corrected Application Papers" was mailed on May 18, 2006, requiring replacement drawings. The record reflects that applicant filed replacement drawings on June 19, 2006, and June 13, 2007. In the non-final and final rejections mailed March 21, 2007, and August 23, 2007, respectively, the examiner objected to the drawings as containing new matter.

Applicant now files the instant petition and requests that the drawings filed June 19, 2006, be accorded a filing date of April 25, 2006, or that the entire application be accorded a filing date of June 19, 2006, such that the replacement drawings are considered part of the original disclosure of the application. The arguments presented have been considered but are unpersuasive. The replacement drawings filed June 19, 2006, cannot be granted a filing date of April 25, 2006, because the replacement drawings were not received on April 25, 2006. If applicant disagrees with the examiner's holding of new matter, then applicant may consider a petition of the examiner's holding of new matter under 37 CFR 1.181. In any case, under the facts presented, the replacement drawings cannot be accorded a filing date of April 25, 2006.

Further, the application filing date cannot be changed to June 19, 2006, because the application was entitled to a filing date of April 25, 2006. If the petition were granted, any time an examiner made a new matter objection or rejection, the applicant could simply file a petition and request a later filing date for the application. The precedent set by granting such a request would undermine long-standing practices of the USPTO. Under the facts presented, applicant may

consider filing a continuation-in-part application, but the filing date for the subject application cannot be changed to June 19, 2006. The petition is dismissed, accordingly.

Petitioner is advised that the Office of Patent Legal Administration was consulted prior to the undersigned drafting this decision.

The application file is being directed to Technology Center 3600, GAU 3617 for further processing.

Telephone inquiries concerning this decision may be directed to the undersigned at (571) 272-3222.

Kenya A. McLaughlin
Petition Attorney
Office of Petitions

UNITED STATES PATENT AND TRADEMARK OFFICE

UNITED STATES DEPARTMENT OF COMMERCE
United States Patent and Trademark Office
Address: COMMISSIONER FOR PATENTS
P.O. Box 1450
Alexandria, Virginia 22313-1450
www.uspto.gov

HAYNES AND BOONE, LLP
IP Section
2323 Victory Avenue
Suite 700
Dallas, TX 75219

Mail Date: 04/21/2010

Applicant	: Shannon Bynum	: DECISION ON REQUEST FOR
Patent Number	: 7570486	: RECALCULATION of PATENT
Issue Date	: 08/04/2009	: TERM ADJUSTMENT IN VIEW
Appliction No	: 11/410,393	: OF WYETH
Filed	: 04/25/2006	:
		:

The Patentee's Request for Recalculation is **DISMISSED.**

This Request is deemed ineligible for consideration for one or more of the following reasons:

(A). The patent for which PTA recalculation is requested is either a design or reissue application or is a reexamination proceeding;

(B). The patent for which PTA recalculation is requested resulted from a utility or plant application filed under 35 USC 111(a) before May 29, 2000 and no CPA filed in the application on/after May 29, 2000;

(C). The patent for which PTA recalculation is requested resulted from an international application in which the international filing date was before May 29, 2000 and no CPA filed in the application on/after May 29, 2000;

(D). The patent for which PTA recalculation is requested issued on/after March 2, 2010;

(E). The Request for Recalculation was filed more than 180 days after the grant date of the patent and the request was not filed within two months of a dismissal of a request for reconsideration of the of the patent term under 37 CFR 1.705(d);

(F). The Request for Recalculation is not solely limited to USPTO pre-Wyeth interpretation of 35 U.S.C. 154(b)(2)(A);

or

(G). A civil action was filed pursuant to 35 U.S.C. 154(b)(4)(A)concerning the same patent at issue in this request.

Patentee may file a reply to this decision dismissing the Request for Recalculation. Patentee must file such reply within one month or thirty days, whichever is longer, of the mail date of the decision dismissing the Request for Recalculation. No fee is required if patentee is asserting in the reply that the dismissal for ineligibility is improper.

Patentee should use document code PET.OP if electronically filing a reply to this dismissal. If the USPTO finds that the request was improperly deemed ineligible, the USPTO will mail applicant a recalculation determination.

Patentee should be aware that in order to preserve the right to review in the United States District Court for the District of Columbia of the USPTO patent term adjustment determination, patentee must ensure that he or she also take the steps required under 35 U.S.C. 154(b)(4)(A). Nothing in the request for recalculation should be construed as providing an alternative time frame for commencing a civil action under 35 U.S.C. 154 (b)(4)(A).

Any questions concerning this decision should be directed to the Office of Patent Legal Administration at 571-272-7702.

UNITED STATES PATENT AND TRADEMARK OFFICE

Commissioner for Patents
United States Patent and Trademark Office
P.O. Box 1450
Alexandria, VA 22313-1450
www.uspto.gov

COPY MAILED

SEP 18 2006

OFFICE OF PETITIONS

TEXAS INSTRUMENTS INCORPORATED
P O BOX 655474, M/S 3999
DALLAS TX 75265

In re Application of :
Glover et al :
Application No. 11/410,394 : ON PETITION
Deposited: April 25, 2006 :
Attorney Docket No.: TI-38386 :
Title: Hard Disk Drive Preamp Heat :
Dissipation Methods :
:

This is a decision on the petition to accord a filing date submitted June 19, 2006 requesting that the above-identified application be accorded a filing date of April 25, 2006.

Application papers in the above-identified application were deposited on April 25, 2006. However, on May 18, 2006 the Office of Initial Patent Examination mailed a "Notice of Incomplete Nonprovisional Application", notifying applicant that the application papers had not been accorded a filing date because the application was deposited without drawings.[1]

In response, 3 sheets of drawings, including figures 1-9 and the present petition were filed on June 19, 2006. The petition contends that the application as filed contained 3 sheets of of informal drawings and was described in the original filed specification. In support, the petition is accompanied by a copy of applicants' postcard receipt which acknowledges receipt in the office of "Informal Drawings 3 pgs" on April 25, 2006.

Applicant's postcard receipt is prima facie[2] evidence that the

---

[1] See 35 U.S.C. 111(a)(4)

[2] A postcard receipt which itemizes and properly identifies the items which are being filed serves as prima facie evidence of receipt in the office of all items listed thereon. See MPEP 503.

drawings were received on April 25, 2006, but no drawings are present in the file. Hence, it is clear that the papers for this application were mishandled by the Office. Therefore, it is concluded that 3 sheets of drawings, including figures 1-9 were received on April 25, 2006, as shown in counsel's file, and later misplaced in the Office.

The petition is Granted. The $400 petition fee will be refunded.

Since the original drawings cannot be located in the Office, the copy of the drawings supplied on June 19, 2006, will be used for processing and examination purposes.

There is no indication that Petitioner herein was ever empowered to prosecute the instant application. If Petitioner desires to receive future correspondence regarding this application, the appropriate power of attorney documentation and change of correspondence address must be submitted. A courtesy copy of this decision will be mailed to Petitioner. However, all future correspondence will be directed to the address of record until such time as appropriate instructions are received to the contrary.

The application will then be returned to the Office of Initial Patent Examination for further processing with a **filing date of April 25, 2006**, using the 3 sheets of drawings supplied on June 19, 2006.

Telephone inquiries related to this decision may be directed to the undersigned at(571) 272-3215.

Charlema R. Grant

Charlema R. Grant
Petition Attorney
Office of Petitions

cc: Robert C. Klinger
Jackson Walker L.L.P.
901 Main Street, Suit 6000
Dallas, Texas 75202

UNITED STATES PATENT AND TRADEMARK OFFICE

COMMISSIONER FOR PATENTS
UNITED STATES PATENT AND TRADEMARK OFFICE
P.O. BOX 1450
ALEXANDRIA, VA 22313-1450
www.uspto.gov

E I DU PONT DE NEMOURS AND COMPANY
LEGAL PATENT RECORDS CENTER
BARLEY MILL PLAZA 25/1128
4417 LANCASTER PIKE
WILMINGTON, DE 19805

COPY MAILED
SEP 0 6 2006
OFFICE OF PETITIONS

In re Application of :
Wulf, et al. :
Filed: April 25, 2006 : ON PETITION
Application No. 11/410,399 :
Dkt. No.: FA1256 US NA :

This is a decision on the "PETITION UNDER 37 C.F.R. § 1.57(A)(3)," filed May 30, 2006.

The petition under 37 CFR 1.57 is **DISMISSED**.

The application was submitted April 25, 2006 without drawings. A Notice of Incomplete Nonprovisioanl Application (Notice) was mailed May 19, 2006 by the Office of Initial Patent Examination. The Notice indicated that the instant application had not been accorded a filing date because the application had been submitted without drawings in accordance with 37 CFR 1.113 (first sentence).

The instant petition along with preliminary amendment were submit wherein petitioners argue that the drawings in question were inadvertently omitted, but said drawings appear in provisional App. No. 60/675,220 to which the instant application claims the benefit of priority. Therefore, petitioners request entry of the drawings in accordance with 37 CFR 1.57.

As stated in MPEP 601.01(f), it is the practice of the PTO to treat a non-provisional application that contains at least some disclosure of a process or method as an application for which a drawing is not necessary for an understanding of the invention under 35 USC 113 (first sentence).

Moreover, MPEP 601.01(f) states that a nonprovisional application having at least one claim, or a provisional application having at least some disclosure, directed to the subject matter discussed above for which a drawing is usually not considered essential for a filing date, describing drawing figure(s) in the specification, but filed without drawings will be treated as an application filed without all of the drawing

figures referred to in the specification as discussed in MPEP 601.01(g), so long as the application contains something that can be construed as a written description and the names of all the inventors. Should the Technology Center determine that drawings are necessary under 35 U.S.C. 113 (first sentence) the filing date issue will be reconsidered by the USPTO.

A review of the official file reveals that the instant application includes at least one process claim. As it is USPTO practice to treat a non-provisional application that contains at least some disclosure of a process or method as an application for which a drawing is not necessary, the application, as submitted, is entitled to a filing date of April 25, 2006. Thus, a petition under 37 CFR 1.57 is unnecessary as the instant application is otherwise entitled to a filing date under 37 CFR 1.53(b).

The application will be processed with only the papers present on April 25, 2006, without drawings as part of the original disclosure.

The amendment under 37 CFR 1.57 will be examined in due course.

A refund of the previously submitted petition fee may be requested by writing to the Finance Office, Refund Division. A copy of this decision should accompany any request for refund of the $400.00 petition fee.

The application is being returned to the Office of Initial Patent Examination for further processing with a filing date of April 25, 2006 using only the papers present on that day and without entry of any drawings into the record.

Telephone inquiries related to this decision may be directed to the undersigned at (571) 272-3205.

Alesia M. Brown
Petitions Attorney
Office of Petitions

UNITED STATES PATENT AND TRADEMARK OFFICE

UNITED STATES DEPARTMENT OF COMMERCE
United States Patent and Trademark Office
Address: COMMISSIONER FOR PATENTS
P.O. Box 1450
Alexandria, Virginia 22313-1450
www.uspto.gov

ECKERT SEAMANS CHERIN & MELLOTT, LLC.
600 GRANT STREET, 44TH FLOOR
PITTSBURGH, PA 15219

Mail Date: 07/14/2010

Applicant	: Arash A. Hekmat	: DECISION ON REQUEST FOR
Patent Number	: 7647533	: RECALCULATION of PATENT
Issue Date	: 01/12/2010	: TERM ADJUSTMENT IN VIEW
Application No	: 11/410,402	: OF WYETH AND NOTICE OF INTENT TO
Filed	: 04/25/2006	: ISSUE CERTIFICATE OF CORRECTION
		:

The Request for Recalculation is **GRANTED** to the extent indicated.

The patent term adjustment has been determined to be **755** days. The USPTO will *sua sponte* issue a certificate of correction reflecting the amount of PTA days determined by the recalculation.

Prior to the issuance of the certificate of correction, the USPTO will afford patentee an opportunity to be heard and request reconsideration. Accordingly, patentee has **one month or thirty (30) days,** whichever is longer, to file a request for reconsideration of this patent term adjustment calculation. See 35 U.S.C. 154(b)(3)(B)(ii) and 37 CFR 1.322(a)(4). No extensions of time will be granted under 37 CFR 1.136.

Patentee should use document code PET.OP if electronically filing a request for reconsideration of this patent term adjustment calculation. The patentee must also include the information required by 37 CFR 1.705(b)(2) and the fee required by 37 CFR 1.18(e). If patentee does not file a timely request for reconsideration of this patent term adjustment calculation including the information required by 37 CFR 1.705(b)(2) and the fee required by 37 CFR 1.18(e), the USPTO will issue a certificate of correction reflecting the PTA determination noted above.

Patentee should be aware that in order to preserve the right to review in the United States District Court for the District of Columbia of the USPTO patent term adjustment determination, patentee must ensure that he or she also take the steps required under 35 U.S.C. 154(b)(4)(A) in a timely manner. Nothing in the request for recalculation should be construed as providing an alternative time frame for commencing a civil action under 35 U.S.C. 154(b)(4)(A).

Any questions concerning this decision should be directed to the Office of Patent Legal Administration at 571-272-7702.

UNITED STATES PATENT AND TRADEMARK OFFICE

UNITED STATES DEPARTMENT OF COMMERCE
United States Patent and Trademark Office
Address: COMMISSIONER FOR PATENTS
P.O. Box 1450
Alexandria, Virginia 22313-1450
www.uspto.gov

ALCON
IP LEGAL, TB4-8
6201 SOUTH FREEWAY
FORT WORTH, TX 76134

Mail Date: 04/21/2010

Applicant	: Karl Cazzini	: DECISION ON REQUEST FOR
Patent Number	: 7618177	: RECALCULATION of PATENT
Issue Date	: 11/17/2009	: TERM ADJUSTMENT IN VIEW
Appliction No	: 11/410,419	: OF WYETH AND NOTICE OF INTENT TO
Filed	: 04/25/2006	: ISSUE CERTIFICATE OF CORRECTION
		:

The Request for Recalculation is **GRANTED** to the extent indicated.

The patent term adjustment has been determined to be **397** days. The USPTO will *sua sponte* issue a certificate of correction reflecting the amount of PTA days determined by the recalculation.

Prior to the issuance of the certificate of correction, the USPTO will afford patentee an opportunity to be heard and request reconsideration. Accordingly, patentee has **one month or thirty (30) days**, whichever is longer, to file a request for reconsideration of this patent term adjustment calculation. See 35 U.S.C. 154(b)(3)(B)(ii) and 37 CFR 1.322(a)(4). No extensions of time will be granted under 37 CFR 1.136.

Patentee should use document code PET.OP if electronically filing a request for reconsideration of this patent term adjustment calculation. The patentee must also include the information required by 37 CFR 1.705(b)(2) and the fee required by 37 CFR 1.18(e). If patentee does not file a timely request for reconsideration of this patent term adjustment calculation including the information required by 37 CFR 1.705(b)(2) and the fee required by 37 CFR 1.18(e), the USPTO will issue a certificate of correction reflecting the PTA determination noted above.

Patentee should be aware that in order to preserve the right to review in the United States District Court for the District of Columbia of the USPTO patent term adjustment determination, patentee must ensure that he or she also take the steps required under 35 U.S.C. 154(b)(4)(A) in a timely manner. Nothing in the request for recalculation should be construed as providing an alternative time frame for commencing a civil action under 35 U.S.C. 154(b)(4)(A).

Any questions concerning this decision should be directed to the Office of Patent Legal Administration at 571-272-7702.

UNITED STATES PATENT AND TRADEMARK OFFICE

UNITED STATES DEPARTMENT OF COMMERCE
United States Patent and Trademark Office
Address: COMMISSIONER FOR PATENTS
P.O. Box 1450
Alexandria, Virginia 22313-1450
www.uspto.gov

ALSTON & BIRD LLP
BANK OF AMERICA PLAZA
101 SOUTH TRYON STREET, SUITE 4000
CHARLOTTE, NC 28280-4000

Mail Date: 04/21/2010

Applicant	: Hollan Akio Tsuda	: DECISION ON REQUEST FOR
Patent Number	: 7654004	: RECALCULATION of PATENT
Issue Date	: 02/02/2010	: TERM ADJUSTMENT IN VIEW
Appliction No	: 11/410,439	: OF WYETH AND NOTICE OF INTENT TO
Filed	: 04/25/2006	: ISSUE CERTIFICATE OF CORRECTION
		:

The Request for Recalculation is **GRANTED** to the extent indicated.

The patent term adjustment has been determined to be **119** days. The USPTO will *sua sponte* issue a certificate of correction reflecting the amount of PTA days determined by the recalculation.

Prior to the issuance of the certificate of correction, the USPTO will afford patentee an opportunity to be heard and request reconsideration. Accordingly, patentee has **one month or thirty (30) days**, whichever is longer, to file a request for reconsideration of this patent term adjustment calculation. See 35 U.S.C. 154(b)(3)(B)(ii) and 37 CFR 1.322(a)(4). No extensions of time will be granted under 37 CFR 1.136.

Patentee should use document code PET.OP if electronically filing a request for reconsideration of this patent term adjustment calculation. The patentee must also include the information required by 37 CFR 1.705(b)(2) and the fee required by 37 CFR 1.18(e). If patentee does not file a timely request for reconsideration of this patent term adjustment calculation including the information required by 37 CFR 1.705(b)(2) and the fee required by 37 CFR 1.18(e), the USPTO will issue a certificate of correction reflecting the PTA determination noted above.

Patentee should be aware that in order to preserve the right to review in the United States District Court for the District of Columbia of the USPTO patent term adjustment determination, patentee must ensure that he or she also take the steps required under 35 U.S.C. 154(b)(4)(A) in a timely manner. Nothing in the request for recalculation should be construed as providing an alternative time frame for commencing a civil action under 35 U.S.C. 154(b)(4)(A).

Any questions concerning this decision should be directed to the Office of Patent Legal Administration at 571-272-7702.

UNITED STATES PATENT AND TRADEMARK OFFICE

UNITED STATES DEPARTMENT OF COMMERCE
United States Patent and Trademark Office
Address: COMMISSIONER FOR PATENTS
P.O. Box 1450
Alexandria, Virginia 22313-1450
www.uspto.gov

WOODCOCK WASHBURN LLP
CIRA CENTRE, 12TH FLOOR
2929 ARCH STREET
PHILADELPHIA, PA 19104-2891

Mail Date: 04/21/2010

Applicant	: Nicholas C. Nicolaides	: DECISION ON REQUEST FOR
Patent Number	: 7615372	: RECALCULATION of PATENT
Issue Date	: 11/10/2009	: TERM ADJUSTMENT IN VIEW
Appliction No	: 11/410,472	: OF WYETH AND NOTICE OF INTENT TO
Filed	: 04/24/2006	: ISSUE CERTIFICATE OF CORRECTION
		:

The Request for Recalculation is **GRANTED** to the extent indicated.

The patent term adjustment has been determined to be **247** days. The USPTO will *sua sponte* issue a certificate of correction reflecting the amount of PTA days determined by the recalculation.

Prior to the issuance of the certificate of correction, the USPTO will afford patentee an opportunity to be heard and request reconsideration. Accordingly, patentee has **one month or thirty (30) days**, whichever is longer, to file a request for reconsideration of this patent term adjustment calculation. See 35 U.S.C. 154(b)(3)(B)(ii) and 37 CFR 1.322(a)(4). No extensions of time will be granted under 37 CFR 1.136.

Patentee should use document code PET.OP if electronically filing a request for reconsideration of this patent term adjustment calculation. The patentee must also include the information required by 37 CFR 1.705(b)(2) and the fee required by 37 CFR 1.18(e). If patentee does not file a timely request for reconsideration of this patent term adjustment calculation including the information required by 37 CFR 1.705(b)(2) and the fee required by 37 CFR 1.18(e), the USPTO will issue a certificate of correction reflecting the PTA determination noted above.

Patentee should be aware that in order to preserve the right to review in the United States District Court for the District of Columbia of the USPTO patent term adjustment determination, patentee must ensure that he or she also take the steps required under 35 U.S.C. 154(b)(4)(A) in a timely manner. Nothing in the request for recalculation should be construed as providing an alternative time frame for commencing a civil action under 35 U.S.C. 154(b)(4)(A).

Any questions concerning this decision should be directed to the Office of Patent Legal Administration at 571-272-7702.

UNITED STATES PATENT AND TRADEMARK OFFICE

Commissioner for Patents
United States Patent and Trademark Office
P.O. Box 1450
Alexandria, VA 22313-1450
www.uspto.gov

VMWARE, INC.
DARRYL SMITH
3401 Hillview Ave.
PALO ALTO, CA 94304

COPY MAILED

OCT 2 8 2008

OFFICE OF PETITIONS

In re Application of :
John Zedlewski, et. al. :
Application No. 11/410,477 : DECISION ON PETITION
Filed: April 24, 2006 :
Attorney Docket No. A77 :

This is a decision on the petition under the unintentional provisions of 37 CFR 1.137(b), filed August 18, 2008, to revive the above-identified application.

The petition is **GRANTED**.

The application became abandoned for failure to reply in a timely manner to the Non-Final Rejection mailed, February 11, 2008, which set a shortened statutory period for reply of three (3) months. No extensions of time under the provisions of 37 CFR 1.136 (a) were obtained. Accordingly, the application became abandoned on May 12, 2008.

The petition satisfies the requirements of 37 CFR 1.137(b) in that petitioner has supplied (1) the reply in the form of an Amendment, (2) the petition fee of $1540, and (3) a proper statement of unintentional delay.

Telephone inquiries concerning this decision should be directed to Denise Williams at (571) 272-8930.

This application is being referred to Technology Center AU 2185 for appropriate action by the Examiner in the normal course of business on the reply received.

Brian W. Brown
Petitions Examiner
Office of Petitions

UNITED STATES PATENT AND TRADEMARK OFFICE

UNITED STATES DEPARTMENT OF COMMERCE
United States Patent and Trademark Office
Address: COMMISSIONER FOR PATENTS
P.O. Box 1450
Alexandria, Virginia 22313-1450
www.uspto.gov

VMWARE, INC.
DARRYL SMITH
3401 Hillview Ave.
PALO ALTO, CA 94304

Mail Date: 04/20/2010

Applicant	: John Zedlewski	: DECISION ON REQUEST FOR
Patent Number	: 7581064	: RECALCULATION of PATENT
Issue Date	: 08/25/2009	: TERM ADJUSTMENT IN VIEW
Appliction No	: 11/410,477	: OF WYETH AND NOTICE OF INTENT TO
Filed	: 04/24/2006	: ISSUE CERTIFICATE OF CORRECTION
		:

The Request for Recalculation is **GRANTED** to the extent indicated.

The patent term adjustment has been determined to be **204** days. The USPTO will *sua sponte* issue a certificate of correction reflecting the amount of PTA days determined by the recalculation.

Prior to the issuance of the certificate of correction, the USPTO will afford patentee an opportunity to be heard and request reconsideration. Accordingly, patentee has **one month or thirty (30) days**, whichever is longer, to file a request for reconsideration of this patent term adjustment calculation. See 35 U.S.C. 154(b)(3)(B)(ii) and 37 CFR 1.322(a)(4). No extensions of time will be granted under 37 CFR 1.136.

Patentee should use document code PET.OP if electronically filing a request for reconsideration of this patent term adjustment calculation. The patentee must also include the information required by 37 CFR 1.705(b)(2) and the fee required by 37 CFR 1.18(e). If patentee does not file a timely request for reconsideration of this patent term adjustment calculation including the information required by 37 CFR 1.705(b)(2) and the fee required by 37 CFR 1.18(e), the USPTO will issue a certificate of correction reflecting the PTA determination noted above.

Patentee should be aware that in order to preserve the right to review in the United States District Court for the District of Columbia of the USPTO patent term adjustment determination, patentee must ensure that he or she also take the steps required under 35 U.S.C. 154(b)(4)(A) in a timely manner. Nothing in the request for recalculation should be construed as providing an alternative time frame for commencing a civil action under 35 U.S.C. 154(b)(4)(A).

Any questions concerning this decision should be directed to the Office of Patent Legal Administration at 571-272-7702.

UNITED STATES PATENT AND TRADEMARK OFFICE

Commissioner for Patents
United States Patent and Trademark Office
P.O. Box 1450
Alexandria, VA 22313-1450
www.uspto.gov

MAILED
FROM DIRECTOR'S OFFICE

NOV 20 2006

TECHNOLOGY CENTER 3600

Edward M. Livingston, PA
963 Trail Terrace Drive
Naples, FL 34103

In re application of : **DECISION ON PETITION**
George R. Reiff et al. : **TO MAKE SPECIAL FOR**
Application No. 11/410,483 : **NEW APPLICATION**
Filed: April 25, 2006 : **UNDER 37 CFR 1.102**
For: REMOVABLE PANELS FOR POOL ENCLOSURES

This is a decision on the petition filed on November 6, 2006 to make the above-identified application special for infringement under 37 C.F.R. § 1.102(d).

The petition to make the application special is **DENIED**.

REGULATION AND PRACTICE

To be eligible for accelerated examination under 37 C.F.R. § 1.102(d) and pursuant to the "Change to Practice for Petitions in Patent Applications to Make Special and for Accelerated Examination" published in the Federal Register on June 26, 2006 (71 Fed. Reg. 36323), the following conditions must be satisfied:

1. The application must be a non-reissue utility or design application filed under 37 CFR 1.111(a);
2. The application, the petition and the required fees must be filed electronically using the USPTO's electronic filing system (EFS), or EFS-web; if not filed electronically, a statement asserting that EFS and EFS-web were not available during the normal business hours;
3. The application, at the time of filing, must be complete under 37 CFR 1.51 and in condition for examination;
4. The application must contain three or fewer independent claims and twenty or fewer total claims and the claims must be directed to a single invention.

The petition to make special under 37 C.F.R. § 1.102(d) is not acceptable because it was not filed with the application as required in the above Federal Register Notice of June 26, 2006. It appears that the petition was filed under the guidelines for making an application special that were in effect prior to August 25, 2006. As of August 25, 2006 the new guidelines replaced the old guidelines. Since applicant's petition was received on November 6, 2006 with a Certificate of Mail date of November 6, 2006, the petition must be considered under the new guidelines and thus is properly **DENIED**.

For the above-stated reasons, the petition is denied. The application will therefore be taken up by the examiner for action in its regular turn.

Any inquiry regarding this decision should be directed to Steven N. Meyers, Special Program Examiner, at (571) 272-6611.

Steven N. Meyers,
Special Program Examiner
Technology Center 3600

Sm/sm: 11/14/06

UNITED STATES PATENT AND TRADEMARK OFFICE

Commissioner for Patents
United States Patent and Trademark Office
P.O. Box 1450
Alexandria, VA 22313-1450
www.uspto.gov

CHRISTIE, PARKER & HALE, LLP
PO BOX 7068
PASADENA, CA 91109-7068

MAILED

JUL 20 2010

OFFICE OF PETITIONS

In re Application of :
Jeongman Park, et al. :
Application No. 11/410,496 : DECISION GRANTING PETITION
Filed: April 24, 2006 : UNDER 37 CFR 1.313(c)(2)
Attorney Docket No. 57498/S1170 :

This is a decision on the petition under 37 CFR 1.313(c)(2), filed July 19, 2010, to withdraw the above-identified application from issue after payment of the issue fee.

The petition is **GRANTED**.

The above-identified application is withdrawn from issue for consideration of a submission under 37 CFR 1.114 (request for continued examination). *See* 37 CFR 1.313(c)(2).

Petitioner is advised that the issue fee paid on June 30, 2010 cannot be refunded. If, however, this application is again allowed, petitioner may request that it be applied towards the issue fee required by the new Notice of Allowance.[1]

Telephone inquiries concerning this decision should be directed to undersigned at (571) 272-1642. All other inquiries concerning the examination or status of this application should be directed to the Technology Center.

This application is being referred to Technology Center AU 1795 for processing of the request for continued examination under 37 CFR 1.114 and for consideration of the concurrently filed information disclosure statement

/AMW/
April M. Wise
Petitions Examiner
Office of Petitions

[1] *The request to apply the issue fee to the new Notice may be satisfied by completing and returning the new Part B – Fee(s) Transmittal Form (along with any balance due at the time of submission). Petitioner is advised that the Issue Fee Transmittal Form must be completed and timely submitted to avoid abandonment of the application.*

UNITED STATES PATENT AND TRADEMARK OFFICE

UNITED STATES DEPARTMENT OF COMMERCE
United States Patent and Trademark Office
Address: COMMISSIONER FOR PATENTS
P.O. Box 1450
Alexandria, Virginia 22313-1450
www.uspto.gov

THE WEBB LAW FIRM, P.C.
700 KOPPERS BUILDING
436 SEVENTH AVENUE
PITTSBURGH, PA 15219

Mail Date: 04/26/2010

Applicant	: Aditya Narayan Shrivastava	: DECISION ON REQUEST FOR
Patent Number	: 7651590	: RECALCULATION of PATENT
Issue Date	: 01/26/2010	: TERM ADJUSTMENT IN VIEW
Appliction No	: 11/410,498	: OF WYETH AND NOTICE OF INTENT TO
Filed	: 04/25/2006	: ISSUE CERTIFICATE OF CORRECTION
		:

The Request for Recalculation is **GRANTED** to the extent indicated.

The patent term adjustment has been determined to be **781** days. The USPTO will *sua sponte* issue a certificate of correction reflecting the amount of PTA days determined by the recalculation.

Prior to the issuance of the certificate of correction, the USPTO will afford patentee an opportunity to be heard and request reconsideration. Accordingly, patentee has **one month or thirty (30) days**, whichever is longer, to file a request for reconsideration of this patent term adjustment calculation. See 35 U.S.C. 154(b)(3)(B)(ii) and 37 CFR 1.322(a)(4). No extensions of time will be granted under 37 CFR 1.136.

Patentee should use document code PET.OP if electronically filing a request for reconsideration of this patent term adjustment calculation. The patentee must also include the information required by 37 CFR 1.705(b)(2) and the fee required by 37 CFR 1.18(e). If patentee does not file a timely request for reconsideration of this patent term adjustment calculation including the information required by 37 CFR 1.705(b)(2) and the fee required by 37 CFR 1.18(e), the USPTO will issue a certificate of correction reflecting the PTA determination noted above.

Patentee should be aware that in order to preserve the right to review in the United States District Court for the District of Columbia of the USPTO patent term adjustment determination, patentee must ensure that he or she also take the steps required under 35 U.S.C. 154(b)(4)(A) in a timely manner. Nothing in the request for recalculation should be construed as providing an alternative time frame for commencing a civil action under 35 U.S.C. 154(b)(4)(A).

Any questions concerning this decision should be directed to the Office of Patent Legal Administration at 571-272-7702.

UNITED STATES PATENT AND TRADEMARK OFFICE

Commissioner for Patents
United States Patent and Trademark Office
P.O. Box 1450
Alexandria, VA 22313-1450
www.uspto.gov

Empk & Shiloh, LLP
116 John Street
Suite 1201
New York, NY 10038

COPY MAILED

NOV 15 2007

OFFICE OF PETITIONS

In re Application of :

Ron Porat :
Application No. 11/410,503 : DECISION ON PETITION
Filed: April 25, 2006 : TO WITHDRAW
Attorney Docket No. ELG-P-9355US : FROM RECORD
:

This is a decision on the Request to Withdraw as attorney or agent of record under 37 C.F.R. § 1.36(b), filed June 29, 2007.

The request is **APPROVED**.

A grantable request to withdraw as attorney/agent of record must be signed by every attorney/agent seeking to withdraw or contain a clear indication that one attorney is signing on behalf of another/others. A request to withdraw will not be approved unless at least 30 (thirty) days would remain between the date of approval and the later of the expiration date of a time to file a response or the expiration date of the maximum time period which can be extended under 37 C.F.R. § 1.136(a).

The request was signed by Andrew Tiajoloff on behalf of all attorneys of record. All attorneys/agents have been withdrawn. Applicant is reminded that there is no attorney of record at this time.

The request to change the correspondence of record is not acceptable as the requested correspondence address is not that of: (1) the first named signing inventor; or (2) an intervening assignee of the entire interest under 37 C.F.R 3.71. All future communications from the Office will be directed to the first named signing inventor at the first copied address below until otherwise properly notified by the applicant.

There is no outstanding Office action at this time.

Telephone inquiries concerning this decision should be directed to Terri Williams at 571-272-2991.

T. Williams

Terri Williams
Petitions Examiner
Office of Petitions

cc: **Ron Porat**
Zur Hadassa 34, D.N.
Haela, 99875
Israel

cc: **Empk & Shiloh, LLP**
116 John Street
Suite 1201
New York, NY 10038

UNITED STATES PATENT AND TRADEMARK OFFICE

Commissioner for Patents
United States Patent and Trademark Office
P.O. Box 1450
Alexandria, VA 22313-1450
www.uspto.gov

KELLEY DRYE & WARREN LLP
400 Atlantic Street, 13th Floor
Stamford, CT 06901

COPY MAILED

JUL 27 2009

OFFICE OF PETITIONS

In re Application of	:	
John Sheffield, et al.	:	
Application No. 11/410,508	:	DECISION ON PETITION
Filed: April 24, 2006	:	TO WITHDRAW
Attorney Docket No. NU-110(C)	:	FROM RECORD
	:	

This is a decision on the Request to Withdraw as attorney or agent of record under 37 C.F.R. § 1.36(b), filed June 16, 2009.

The request is **APPROVED**.

A grantable request to withdraw as attorney/agent of record must be signed by every attorney/agent seeking to withdraw or contain a clear indication that one attorney is signing on behalf of another/others. A request to withdraw will not be approved unless at least 30 (thirty) days would remain between the date of approval and the later of the expiration date of a time to file a response or the expiration date of the maximum time period which can be extended under 37 C.F.R. § 1.136(a).

The request was signed by Marvin R. Wachs on behalf of all attorneys of record. All attorneys/agents have been withdrawn. Applicant is reminded that there is no attorney of record at this time.

The request to change the correspondence of record is not acceptable as the requested correspondence address is not that of: (1) the first named signing inventor; or (2) an intervening assignee of the entire interest under 37 C.F.R 3.71. All future communications from the Office will be directed to the first named signing inventor at the first copied address below until otherwise properly notified by the applicant.

Telephone inquiries concerning this decision should be directed to Terri Williams at 571-272-2991.

Terri Williams
Petitions Examiner
Office of Petitions

cc: **John Sheffield**
964 Glenn Finnan Way
Folsom, CA 95630

cc: **WOLF GREENFIELD & SACKS, P.C.**
600 Atlantic Avenue
Boston, MA 02210-2206

UNITED STATES PATENT AND TRADEMARK OFFICE

UNITED STATES DEPARTMENT OF COMMERCE
United States Patent and Trademark Office
Address: COMMISSIONER FOR PATENTS
P.O. Box 1450
Alexandria, Virginia 22313-1450
www.uspto.gov

APPLICATION NUMBER	FILING OR 371(C) DATE	FIRST NAMED APPLICANT	ATTY. DOCKET NO./TITLE
11/410,508	04/24/2006	John Sheffield	NU-110(C)

CONFIRMATION NO. 2892

47670
KELLEY DRYE & WARREN LLP
400 ALTLANTIC STREET , 13TH FLOOR
STAMFORD, CT 06901

POWER OF ATTORNEY NOTICE

OC000000037079668

Date Mailed: 07/24/2009

NOTICE REGARDING CHANGE OF POWER OF ATTORNEY

This is in response to the Power of Attorney filed 06/16/2009.

- The withdrawal as attorney in this application has been accepted. Future correspondence will be mailed to the new address of record. 37 CFR 1.33.

/tswilliams/

Office of Data Management, Application Assistance Unit (571) 272-4000, or (571) 272-4200, or 1-888-786-0101

UNITED STATES PATENT AND TRADEMARK OFFICE

Commissioner for Patents
United States Patent and Trademark Office
P.O. Box 1450
Alexandria, VA 22313-1450
www.uspto.gov

ANDREW TIAJOLOFF
TIAJOLOFF & KELLY
405 LEXINGTON AVENUE
37TH FLOOR
CHRYSLER BUILDING
NEW YORK, NY 10174

COPY MAILED
NOV 09 2007
OFFICE OF PETITIONS

In re Application of :
Mark Raifel, et al. :
Application No. 11/410,510 : DECISION ON PETITION
Filed: April 25, 2006 : TO WITHDRAW
Attorney Docket No. ELG-P-9025-US : FROM RECORD
:

This is a decision on the Request to Withdraw as attorney or agent of record under 37 C.F.R. § 1.36(b) filed June 29, 2007.

The request is **APPROVED**.

A grantable request to withdraw as attorney/agent of record must be signed by every attorney/agent seeking to withdraw or contain a clear indication that one attorney is signing on behalf of another/others. A request to withdraw will not be approved unless at least 30 (thirty) days would remain between the date of approval and the later of the expiration date of a time to file a response or the expiration date of the maximum time period which can be extended under 37 C.F.R. § 1.136(a).

The request was signed by Andrew L. Tiajoloff on behalf of all attorneys of record who are associated with customer No. 43214.

All attorneys/agents associated with the Customer Number 43214 have been withdrawn.

Applicant is reminded that there is no attorney of record at this time.

The request to change the correspondence of record is not acceptable as the requested correspondence address is not that of: (1) the first named signing inventor; or (2) an intervening assignee of the entire interest under 37 C.F.R 3.71. All future communications from the Office will be directed to the first named signing inventor at the first copied address below until otherwise properly notified by the applicant.

In order to request or take action in a patent matter, the assignee must establish its ownership of the patent to the satisfaction of the Director. In this regard, a Statement under 37 CFR 3.73(b) must have either: (i) documentary evidence of a chain of title from the original owner to the assignee (*e.g.*, copy of an executed assignment), and a statement affirming that the documentary evidence of the chain of title from the original owner to the assignee was or concurrently is being submitted for recordation pursuant to § 3.11; or (ii) a statement specifying where documentary evidence of a chain of title from the original owner to the assignee is recorded in the assignment records of the Office (*e.g.*, reel and frame number).

Telephone inquiries concerning this decision should be directed to undersigned at 571-272-1642.

April M. Wise
Petitions Examiner
Office of Petitions

cc: MARK RAIFEL
37 AHI DAKAR STREET
RA'ANANA, 43259 ISRAEL

cc: EMPK & SHILOH, LLP
116 JOHN ST,
SUITE 1201
NEW YORK, NY 10038

UNITED STATES PATENT AND TRADEMARK OFFICE

UNITED STATES DEPARTMENT OF COMMERCE
United States Patent and Trademark Office
Address: COMMISSIONER FOR PATENTS
P.O. Box 1450
Alexandria, Virginia 22313-1450
www.uspto.gov

APPLICATION NUMBER	FILING OR 371(C) DATE	FIRST NAMED APPLICANT	ATTY. DOCKET NO./TITLE
11/410,510	04/25/2006	Mark Raifel	ELG-P-9025-US

CONFIRMATION NO. 2881

POWER OF ATTORNEY NOTICE

43214
EMPK & SHILOH, LLP
116 John St.
Suite 1201
New York, NY 10038

Date Mailed: 11/05/2007

NOTICE REGARDING CHANGE OF POWER OF ATTORNEY

This is in response to the Power of Attorney filed 06/29/2007.

- The withdrawal as attorney in this application has been accepted. Future correspondence will be mailed to the new address of record. 37 CFR 1.33.

/amwise/

Office of Initial Patent Examination (571) 272-4000 or 1-800-PTO-9199

UNITED STATES PATENT AND TRADEMARK OFFICE

Commissioner for Patents
United States Patent and Trademark Office
P.O. Box 1450
Alexandria, VA 22313-1450
www.uspto.gov

MARSHALL, GERSTEIN & BORUN LLP
233 S. WACKER DRIVE, SUITE 6300
SEARS TOWER
CHICAGO IL 60606

COPY MAILED

OCT 21 2008

OFFICE OF PETITIONS

In re Application of	:	
Robinson et al.	:	
Application Number: 11/410540	:	DECISION ON PETITION
Filing or 371(c) Date: 04/25/2006	:	
Attorney Docket Number: 31173/42277	:	

This is a decision on the petition under 37 CFR 1.182, filed, October 9, 2008, to change the name of inventor "Kelly Sue Hoffman" to – Kelly Sue Warmington --.

The petition is **GRANTED**.

Office records have been updated to reflect the inventor's change of name. A corrected Filing Receipt, which reflects the inventor's change of name, accompanies this decision on petition.

It is noted that the supplemental application data sheet (ADS) filed on April 18, 2008, is unsigned. In accordance with 37 CFR 1.33 and 10.18, a signature of the applicant or representative is required. Petitioner may wish to consider filing a properly-signed supplemental ADS.

Any questions concerning this matter may be directed to Senior Petitions Attorney Douglas I. Wood at (571) 272-3231. Any questions concerning the examination procedures or status of the application should be directed to the Technology Center.

This application is being referred to Technology Center AU 1646 for further processing.

D Wood

Douglas I. Wood
Senior Petitions Attorney
Office of Petitions.

ATTACHMENT: Corrected Filing Receipt

UNITED STATES PATENT AND TRADEMARK OFFICE

UNITED STATES DEPARTMENT OF COMMERCE
United States Patent and Trademark Office
Address: COMMISSIONER FOR PATENTS
P.O. Box 1450
Alexandria, Virginia 22313-1450
www.uspto.gov

APPLICATION NUMBER	FILING or 371(c) DATE	GRP ART UNIT	FIL FEE REC'D	ATTY.DOCKET.NO	TOT CLAIMS	IND CLAIMS
11/410,540	04/25/2006	1646	15440	31173/42277	66	50

CONFIRMATION NO. 2975

CORRECTED FILING RECEIPT

4743
MARSHALL, GERSTEIN & BORUN LLP
233 S. WACKER DRIVE, SUITE 6300
SEARS TOWER
CHICAGO, IL 60606

Date Mailed: 10/20/2008

Receipt is acknowledged of this non-provisional patent application. The application will be taken up for examination in due course. Applicant will be notified as to the results of the examination. Any correspondence concerning the application must include the following identification information: the U.S. APPLICATION NUMBER, FILING DATE, NAME OF APPLICANT, and TITLE OF INVENTION. Fees transmitted by check or draft are subject to collection. Please verify the accuracy of the data presented on this receipt. **If an error is noted on this Filing Receipt, please submit a written request for a Filing Receipt Correction. Please provide a copy of this Filing Receipt with the changes noted thereon. If you received a "Notice to File Missing Parts" for this application, please submit any corrections to this Filing Receipt with your reply to the Notice. When the USPTO processes the reply to the Notice, the USPTO will generate another Filing Receipt incorporating the requested corrections**

Applicant(s)

Martyn Kim Robinson, Wooburn Green, UNITED KINGDOM;
Alistair James Henry, Uxbridge, UNITED KINGDOM;
Alastair Lawson, Slough, UNITED KINGDOM;
Hsieng Sen Lu, Westlake Village, CA;
Christopher Paszty, Ventura, CA;
Kelly Sue Warmington, Newbury Park, CA;
John Latham, Seattle, WA;
David Winkler, Arlington, MA;
Aaron George Winters, Ventura, CA;

Assignment For Published Patent Application

UCB S.A., Slough, UNITED KINGDOM
Amgen, Inc., Thousand Oaks, CA

Power of Attorney: The patent practitioners associated with Customer Number 04743

Domestic Priority data as claimed by applicant

This appln claims benefit of 60/792,645 04/17/2006
and claims benefit of 60/782,244 03/13/2006
and claims benefit of 60/776,847 02/24/2006
and claims benefit of 60/677,583 05/03/2005

Foreign Applications

If Required, Foreign Filing License Granted: 05/08/2006

The country code and number of your priority application, to be used for filing abroad under the Paris Convention, is **US 11/410,540**

Projected Publication Date: Not Applicable

Non-Publication Request: No

Early Publication Request: No

Title

Epitopes

Preliminary Class

540

PROTECTING YOUR INVENTION OUTSIDE THE UNITED STATES

Since the rights granted by a U.S. patent extend only throughout the territory of the United States and have no effect in a foreign country, an inventor who wishes patent protection in another country must apply for a patent in a specific country or in regional patent offices. Applicants may wish to consider the filing of an international application under the Patent Cooperation Treaty (PCT). An international (PCT) application generally has the same effect as a regular national patent application in each PCT-member country. The PCT process **simplifies** the filing of patent applications on the same invention in member countries, but **does not result** in a grant of "an international patent" and does not eliminate the need of applicants to file additional documents and fees in countries where patent protection is desired.

Almost every country has its own patent law, and a person desiring a patent in a particular country must make an application for patent in that country in accordance with its particular laws. Since the laws of many countries differ in various respects from the patent law of the United States, applicants are advised to seek guidance from specific foreign countries to ensure that patent rights are not lost prematurely.

Applicants also are advised that in the case of inventions made in the United States, the Director of the USPTO must issue a license before applicants can apply for a patent in a foreign country. The filing of a U.S. patent application serves as a request for a foreign filing license. The application's filing receipt contains further information and guidance as to the status of applicant's license for foreign filing.

Applicants may wish to consult the USPTO booklet, "General Information Concerning Patents" (specifically, the section entitled "Treaties and Foreign Patents") for more information on timeframes and deadlines for filing foreign patent applications. The guide is available either by contacting the USPTO Contact Center at 800-786-9199, or it can be viewed on the USPTO website at http://www.uspto.gov/web/offices/pac/doc/general/index.html.

For information on preventing theft of your intellectual property (patents, trademarks and copyrights), you may wish to consult the U.S. Government website, http://www.stopfakes.gov. Part of a Department of Commerce initiative, this website includes self-help "toolkits" giving innovators guidance on how to protect intellectual property in specific countries such as China, Korea and Mexico. For questions regarding patent enforcement issues, applicants may call the U.S. Government hotline at 1-866-999-HALT (1-866-999-4158).

LICENSE FOR FOREIGN FILING UNDER

Title 35, United States Code, Section 184

Title 37, Code of Federal Regulations, 5.11 & 5.15

GRANTED

The applicant has been granted a license under 35 U.S.C. 184, if the phrase "IF REQUIRED, FOREIGN FILING LICENSE GRANTED" followed by a date appears on this form. Such licenses are issued in all applications where the conditions for issuance of a license have been met, regardless of whether or not a license may be required as set forth in 37 CFR 5.15. The scope and limitations of this license are set forth in 37 CFR 5.15(a) unless an earlier license has been issued under 37 CFR 5.15(b). The license is subject to revocation upon written notification. The date indicated is the effective date of the license, unless an earlier license of similar scope has been granted under 37 CFR 5.13 or 5.14.

This license is to be retained by the licensee and may be used at any time on or after the effective date thereof unless it is revoked. This license is automatically transferred to any related applications(s) filed under 37 CFR 1.53(d). This license is not retroactive.

The grant of a license does not in any way lessen the responsibility of a licensee for the security of the subject matter as imposed by any Government contract or the provisions of existing laws relating to espionage and the national security or the export of technical data. Licensees should apprise themselves of current regulations especially with respect to certain countries, of other agencies, particularly the Office of Defense Trade Controls, Department of State (with respect to Arms, Munitions and Implements of War (22 CFR 121-128)); the Bureau of Industry and Security, Department of Commerce (15 CFR parts 730-774); the Office of Foreign AssetsControl, Department of Treasury (31 CFR Parts 500+) and the Department of Energy.

NOT GRANTED

No license under 35 U.S.C. 184 has been granted at this time, if the phrase "IF REQUIRED, FOREIGN FILING LICENSE GRANTED" DOES NOT appear on this form. Applicant may still petition for a license under 37 CFR 5.12, if a license is desired before the expiration of 6 months from the filing date of the application. If 6 months has lapsed from the filing date of this application and the licensee has not received any indication of a secrecy order under 35 U.S.C. 181, the licensee may foreign file the application pursuant to 37 CFR 5.15(b).

UNITED STATES PATENT AND TRADEMARK OFFICE

COMMISSIONER FOR PATENTS
UNITED STATES PATENT AND TRADEMARK OFFICE
P.O. BOX 1450
ALEXANDRIA, VA 22313-1450
www.uspto.gov

Paper No.

Chief Patent Counsel
Engelhard Corporation
101 Wood Avenue
P.O. Box 770
Iselin, NJ 08830-0770

COPY MAILED
JUL 24 2006
OFFICE OF PETITIONS

In re Application of	:	
Johnson et al.	:	DECISION ON PETITION
Application No. 11/410,548	:	
Filed: April 25, 2006	:	
Atty Docket No. 4877B (DIV)	:	

This is a decision on the PETITION UNDER 37 CFR 1.17(f), filed June 15, 2006, which is properly considered as a petition under § 1.53(e)(2). Petitioners request that the Office accord the above-identified application a filing date of April 25, 2006, with page 6 of the specification considered part of the original application disclosure.

Application papers in the above-identified application were deposited on April 25, 2006. However, on June 2, 2006, the Initial Patent Examination Division mailed applicants a NOTICE OF OMITTED ITEMS IN A NONPROVISIONAL APPLICATION. Applicants were thereby notified that the application papers had been accorded a filing date; however, page 6 of the specification appeared to have been omitted from the application.

In response, applicants filed the instant petition (and petition fee). Applicants contend that the entire patent application including 38 pages of specification and abstract, 3 pages of claims, and 7 pages of drawings were deposited into the US mail on April 25, 2006. In support thereof, applicants submitted a copy of their return postcard from the USPTO.

A postcard receipt, which itemizes and properly identifies the items, which are being filed, serves as prima facie evidence of receipt in the Office of all items listed thereon on the date stamped thereon by the Office. See MPEP 503. A review of petitioners' postcard receipt reveals that: 1) it was date stamped as received in the USPTO on April 25, 2006, and the items filed therewith were assigned Application No. 11410548; 2) it specifically identifies the items being filed, including "38 Pgs. Spec & Abstract" and "3 Pages of Claims" and 3) it lacks any annotation of non-receipt of any item denoted on the postcard. Thus, petitioners have shown that the items denoted, including 38 pages of specification and abstract, were filed on April 25, 2006.

The application papers already considered received in the Office on April 25, 2006, were reviewed along with page 6 of the specification submitted on petition. These papers together constitute the items described on the postcard receipt as "38 Pgs. Spec & Abstract." It is concluded that petitioner has shown that page 6 was among the items present in the application on the date of deposit and should be included in the original application disclosure.

Accordingly, the petition is **GRANTED**.

Given the basis for granting the petition, petitioner's request to refund the petition fee is granted. The petition fee is being refunded to Deposit Account No. 05-1070, as authorized.

The application is being forwarded to the Office of Initial Patent Examination (OIPE) for:

- further processing with a filing date of April 25, 2006 using the application papers received in the Office and presently accorded that date; and page 6 of the specification re-supplied on petition filed June 15, 2006; and

- for indication in Office records, as appropriate, that page 6 of the specification was present in the application on filing.

Applicants will receive appropriate notifications regarding the fees owed, if any, and other information in due course from OIPE.

Telephone inquiries related to this decision should be directed to the undersigned at 571-272-3219.

Nancy Johnson
Senior Petitions Attorney
Office of Petitions

UNITED STATES PATENT AND TRADEMARK OFFICE

UNITED STATES DEPARTMENT OF COMMERCE
United States Patent and Trademark Office
Address: COMMISSIONER FOR PATENTS
P.O. Box 1450
Alexandria, Virginia 22313-1450
www.uspto.gov

TAROLLI, SUNDHEIM, COVELL & TUMMINO L.L.P.
1300 EAST NINTH STREET, SUITE 1700
CLEVELAND, OH 44114

Mail Date: 04/27/2010

Applicant	: Eric J. Eckelberg	: DECISION ON REQUEST FOR
Patent Number	: 7618061	: RECALCULATION of PATENT
Issue Date	: 11/17/2009	: TERM ADJUSTMENT IN VIEW
Application No	: 11/410,554	: OF WYETH AND NOTICE OF INTENT TO
Filed	: 04/25/2006	: ISSUE CERTIFICATE OF CORRECTION
		:

The Request for Recalculation is **GRANTED** to the extent indicated.

The patent term adjustment has been determined to be **761** days. The USPTO will *sua sponte* issue a certificate of correction reflecting the amount of PTA days determined by the recalculation.

Prior to the issuance of the certificate of correction, the USPTO will afford patentee an opportunity to be heard and request reconsideration. Accordingly, patentee has **one month or thirty (30) days**, whichever is longer, to file a request for reconsideration of this patent term adjustment calculation. See 35 U.S.C. 154(b)(3)(B)(ii) and 37 CFR 1.322(a)(4). No extensions of time will be granted under 37 CFR 1.136.

Patentee should use document code PET.OP if electronically filing a request for reconsideration of this patent term adjustment calculation. The patentee must also include the information required by 37 CFR 1.705(b)(2) and the fee required by 37 CFR 1.18(e). If patentee does not file a timely request for reconsideration of this patent term adjustment calculation including the information required by 37 CFR 1.705(b)(2) and the fee required by 37 CFR 1.18(e), the USPTO will issue a certificate of correction reflecting the PTA determination noted above.

Patentee should be aware that in order to preserve the right to review in the United States District Court for the District of Columbia of the USPTO patent term adjustment determination, patentee must ensure that he or she also take the steps required under 35 U.S.C. 154(b)(4)(A) in a timely manner. Nothing in the request for recalculation should be construed as providing an alternative time frame for commencing a civil action under 35 U.S.C. 154(b)(4)(A).

Any questions concerning this decision should be directed to the Office of Patent Legal Administration at 571-272-7702.

DATE 9/17/2007 APPLICATION NUMBER 11/410,567

DOC CODE PETDEC.OIPE DOC DATE 09/19/07

DELIVER THE ATTACHED FIFLE/DOCUMENT TO THE TC SCANNING CENTER.

CONTRACTOR: THE ATTACHED FILE/DOCUMENT MUST BE INDEXED AND SCANNED INTO IFW WITHIN **8** WORK HOURS; UPLOADING OF THE SCANNED IMAGES SHOULD OCCUR NO LATER THAN **16** WORK HOURS FOLLOWING RECEIPT OF THIS REQUEST

AFTER SCANNING, ORIGINAL DOCUMENTS SHOULD BE BOXED IN ACCORDANCE WITH INSTRUCTIONS

UNITED STATES PATENT AND TRADEMARK OFFICE

Commissioner for Patents
United States Patent and Trademark Office
P.O. Box 1450
Alexandria, VA 22313-1450
www.uspto.gov

KOLISCH HARTWELL, P.C.
200 PACIFIC BUILDING
520 SW YAMHILL STREET
PORTLAND OR 97204

COPY MAILED

SEP 19 2007

OFFICE OF PETITIONS

In re Application of :
Jon R. STABLER et al. :
Application No. 11/410,567 : ON PETITION
Filed: April 24, 2006 :
Attorney Docket No. SPY.302CON2 :

This is a decision on the petition under 37 CFR 1.137(b), filed July 18, 2007, to revive the above-identified application.

The petition is **GRANTED**.

The above-identified application became abandoned for failure to reply to the Notice to File Missing Parts of Nonprovisional Application mailed May 18, 2006, which set a shortened statutory period for reply of two (2) months. No extensions of time under the provisions of 37 CFR 1.136(a) were obtained. Accordingly, the above-identified application became abandoned on July 19, 2006.

The petition satisfies the conditions for revival pursuant to the provisions of 37 CFR 1.137(b) in that (1) the reply in the form of a response to the Notice; (2) the petition fee of $750; and (3) the required statement of unintentional delay have been received. Accordingly, the reply to the Notice of May 18, 2006 is accepted as having been unintentionally delayed.

Telephone inquiries concerning this decision should be directed to Brian Sines at (571) 272-6051 or in his absence, the undersigned at (571) 272-7099.

The application file is being referred to OIPE for appropriate action.

David Bucci
Petitions Examiner
Office of Petitions

UNITED STATES PATENT AND TRADEMARK OFFICE

Commissioner for Patents
United States Patent and Trademark Office
P.O. Box 1450
Alexandria, VA 22313-1450
www.uspto.gov

PEACOCK MYERS, P.C.
201 THIRD STREET, N.W.
SUITE 1340
ALBUQUERQUE, NM 87102

COPY MAILED

FEB 04 2008

OFFICE OF PETITIONS

In re Application of :
Jean J. Robillard :
Application No. 11/410,571 : DECISION ON PETITION
Filed: April 24, 2006 : TO WITHDRAW
Attorney Docket No. 32310-US-01 : FROM RECORD
:

This is a decision on the Request to Withdraw as attorney or agent of record under 37 C.F.R. § 1.36(b) filed August 21, 2007.

The request is **APPROVED**.

A grantable request to withdraw as attorney/agent of record must be signed by every attorney/agent seeking to withdraw or contain a clear indication that one attorney is signing on behalf of another/others. A request to withdraw will not be approved unless at least 30 (thirty) days would remain between the date of approval and the later of the expiration date of a time to file a response or the expiration date of the maximum time period which can be extended under 37 C.F.R. § 1.136(a).

The request was signed by Deborah A. Peacock on behalf of all attorneys of record who are associated with customer No. 05179.

All attorneys/agents associated with the Customer Number 05179 have been withdrawn.

Applicant is reminded that there is no attorney of record at this time.

The correspondence address of record has been changed and the new correspondence address is the address indicated below.

There is an outstanding Office action mailed January 2, 2008 that requires a reply from the applicant.

Telephone inquiries concerning this decision should be directed to undersigned at 571-272-1642.

April M. Wise
Petitions Examiner
Office of Petitions

cc: JEAN J. ROBILLARD
RESIDENCE DES ORANGERS
19 AV. DE L' HOPITAL
VALLAURIS 06220
FRANCE

UNITED STATES PATENT AND TRADEMARK OFFICE

UNITED STATES DEPARTMENT OF COMMERCE
United States Patent and Trademark Office
Address: COMMISSIONER FOR PATENTS
P.O. Box 1450
Alexandria, Virginia 22313-1450
www.uspto.gov

APPLICATION NUMBER	FILING OR 371(C) DATE	FIRST NAMED APPLICANT	ATTY. DOCKET NO./TITLE
11/410,571	04/24/2006	Jean J. Robillard	32310-US-01

CONFIRMATION NO. 4861

POWER OF ATTORNEY NOTICE

5179
PEACOCK MYERS, P.C.
201 THIRD STREET, N.W.
SUITE 1340
ALBUQUERQUE, NM 87102

OC00000028016255

Date Mailed: 01/31/2008

NOTICE REGARDING CHANGE OF POWER OF ATTORNEY

This is in response to the Power of Attorney filed 08/21/2007.

- The withdrawal as attorney in this application has been accepted. Future correspondence will be mailed to the new address of record. 37 CFR 1.33.

/amwise/

Office of Initial Patent Examination (571) 272-4000 or 1-800-PTO-9199

UNITED STATES PATENT AND TRADEMARK OFFICE

UNITED STATES DEPARTMENT OF COMMERCE
United States Patent and Trademark Office
Address: COMMISSIONER FOR PATENTS
P.O. Box 1450
Alexandria, Virginia 22313-1450
www.uspto.gov

APPLICATION NO.	FILING DATE	FIRST NAMED INVENTOR	ATTORNEY DOCKET NO.	CONFIRMATION NO.
11/410,573	04/24/2006	Tomoya Anzai	26869T-003000US	4909

20350 7590 10/07/2009
TOWNSEND AND TOWNSEND AND CREW, LLP
TWO EMBARCADERO CENTER
EIGHTH FLOOR
SAN FRANCISCO, CA 94111-3834

EXAMINER	
NGUYEN, PHONG H	
ART UNIT	PAPER NUMBER
2162	
MAIL DATE	DELIVERY MODE
10/07/2009	PAPER

Please find below and/or attached an Office communication concerning this application or proceeding.

The time period for reply, if any, is set in the attached communication.

UNITED STATES PATENT AND TRADEMARK OFFICE

Commissioner for Patents
United States Patent and Trademark Office
P.O. Box 1450
Alexandria, VA 22313-1450
www.uspto.gov

Lu Yin
TOWNSEND and TOWNSEND and CREW LLP
Two Embarcadero Center, Eighth Floor
San Francisco, California 94111-3834

In re Application of:
Tomoya ANZAI et al.
Appl. No.: 11/410,573
Filed: April 24, 2006
For: STORAGE SYSTEM, DATA MIGRATION METHOD AND SERVER APPARATUS

DECISION ON PETITION UNDER 37 CFR 1.59

This is a decision on the petition under 37 CFR 1.59(b), filed on 01 September 2009, to expunge information submitted on 27 August 2009.

The petition is **GRANTED**.

Petitioner requests that the Document entitled "Extension of Time" (total 64 pages) submitted on 27 August 2009 be expunged from the record. Petitioner states that the Document was unintentionally submitted. The petition fee set forth in 37 CFR § 1.17(g) has been paid.

The expunged Document has been closed from public view and will not be returned to applicant.

It is noted that the instant application has been published on 20 September 2007. Thus, the aforementioned Document submitted on 27 August 2009 has already been made available to the public and subject to copying by the public. According, the Office cannot guarantee that the information being closed as a result of this decision was not previously accessed by the public.

Applicant is required to retain the expunged information for the life of any patent, which issues on the above-identified application

Any inquiry concerning this decision should be directed to the undersigned whose telephone number is (571) 272-3613.

/Vincent N. Trans/
Vincent N. Trans, SPRE/QAS
Technology Center 2100
Computer Architecture and Software

UNITED STATES PATENT AND TRADEMARK OFFICE

Commissioner for Patents
United States Patent and Trademark Office
P.O. Box 1450
Alexandria, VA 22313-1450
www.uspto.gov

FISH & RICHARDSON P.C.
P.O. BOX 1022
MINNEAPOLIS, MN 55440-1022

COPY MAILED

NOV 14 2006

OFFICE OF PETITIONS

In re Application of :
Borland, Topf, and Rice :
Application No. 11/410,606 :
Filed: April 25, 2006 :
Attorney Docket No. 15825-208001 :
For: System and Method for Pipe Repair :
Using Fiber Wrap and Polymeric :
Resin :

Decision According Status
Under 37 CFR 1.47(a)

This is a decision on the petition under 37 CFR 1.47(a), filed July 17, 2006.

The petition is **granted**.

The above-identified application and papers have been reviewed and found in compliance with 37 CFR 1.47(a). This application is hereby accorded Rule 1.47(a) status.

As provided in Rule 1.47(c), this Office will forward notice of this application's filing to the non-signing inventor at the address given in the petition. Notice of the filing of this application will also be published in the Official Gazette.

The Office of Initial Patent Examination will be informed of the instant decision so that it may continue to prepare the application for examination.

Telephone inquiries regarding this communication should be directed to Petitions Attorney Steven Brantley at (571) 272-3203.

Charles Steven Brantley
Senior Petitions Attorney
Office of Petitions

UNITED STATES PATENT AND TRADEMARK OFFICE

Commissioner for Patents
United States Patent and Trademark Office
P.O. Box 1450
Alexandria, VA 22313-1450
www.uspto.gov

TEXAS INSTRUMENTS INCORPORATED
P O BOX 655474 M/S 3999
DALLAS TX 75265

COPY MAILED
NOV 02 2006
OFFICE OF PETITIONS

In re Application of	:	DECISION NOTING
Ravikumar, et al.	:	JOINDER OF INVENTORS
Application No. 11/410,628	:	AND PETITION UNDER
Filing Date: April 25, 2006	:	37 CFR 1.47(A) MOOT
Attorney Docket No. 00016.00006US1	:	

This is in response to the petitions under 37 CFR 1.47(a), filed July 24, 2006, and August 28, 2006.

With the petition filed August 28, 2006, Rule 47 applicant submitted a declaration executed by previously non-signing inventor Nisar Ahmed.

In view of the **joinder** of the inventor, further consideration under 37 CFR 1.47(a) is not necessary and the petition is considered to be **moot**. This application does not have any Rule 1.47(a) status and no such status should appear on the file wrapper. This application need not be returned to this Office for further consideration under 37 CFR 1.47(a).

The matter is being forwarded to Group Art Unit 2133 for docketing and examination in due course.

Telephone inquiries concerning this decision may be directed to the undersigned at (571)272-3207.

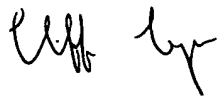

Cliff Congo
Petitions Attorney
Office of Petitions

UNITED STATES PATENT AND TRADEMARK OFFICE

UNITED STATES DEPARTMENT OF COMMERCE
United States Patent and Trademark Office
Address: COMMISSIONER FOR PATENTS
P.O. Box 1450
Alexandria, Virginia 22313-1450
www.uspto.gov

TEXAS INSTRUMENTS INCORPORATED
P O BOX 655474, M/S 3999
DALLAS, TX 75265

Mail Date: 06/30/2010

Applicant	: Chennagiri P. Ravikumar	: DECISION ON REQUEST FOR
Patent Number	: 7640475	: RECALCULATION of PATENT
Issue Date	: 12/29/2009	: TERM ADJUSTMENT IN VIEW
Application No	: 11/410,628	: OF WYETH AND NOTICE OF INTENT TO
Filed	: 04/25/2006	: ISSUE CERTIFICATE OF CORRECTION
		:

The Request for Recalculation is **GRANTED** to the extent indicated.

The patent term adjustment has been determined to be **741** days. The USPTO will *sua sponte* issue a certificate of correction reflecting the amount of PTA days determined by the recalculation.

Prior to the issuance of the certificate of correction, the USPTO will afford patentee an opportunity to be heard and request reconsideration. Accordingly, patentee has **one month or thirty (30) days**, whichever is longer, to file a request for reconsideration of this patent term adjustment calculation. See 35 U.S.C. 154(b)(3)(B)(ii) and 37 CFR 1.322(a)(4). No extensions of time will be granted under 37 CFR 1.136.

Patentee should use document code PET.OP if electronically filing a request for reconsideration of this patent term adjustment calculation. The patentee must also include the information required by 37 CFR 1.705(b)(2) and the fee required by 37 CFR 1.18(e). If patentee does not file a timely request for reconsideration of this patent term adjustment calculation including the information required by 37 CFR 1.705(b)(2) and the fee required by 37 CFR 1.18(e), the USPTO will issue a certificate of correction reflecting the PTA determination noted above.

Patentee should be aware that in order to preserve the right to review in the United States District Court for the District of Columbia of the USPTO patent term adjustment determination, patentee must ensure that he or she also take the steps required under 35 U.S.C. 154(b)(4)(A) in a timely manner. Nothing in the request for recalculation should be construed as providing an alternative time frame for commencing a civil action under 35 U.S.C. 154(b)(4)(A).

Any questions concerning this decision should be directed to the Office of Patent Legal Administration at 571-272-7702.

UNITED STATES PATENT AND TRADEMARK OFFICE

Commissioner for Patents
United States Patent and Trademark Office
P.O. Box 1450
Alexandria, VA 22313-1450
www.uspto.gov

JOHN S. PRATT, ESQ
KILPATRICK STOCKTON, LLP
1100 PEACHTREE STREET
SUITE 2800
ATLANTA GA 30309

MAILED

NOV 0 9 2009

OFFICE OF PETITIONS

In re Application of
Peng et al.
Application No. 11/410663
Filing or 371(c) Date: 04/25/2006
Attorney Docket Number: 40715-370523

: ON PETITION REGARDING
: PATENT TERM ADJUSTMENT

This is in response to the Petition Regarding Patent Term Adjustment (PTA) Indicated in Notice of Allowance, filed July 30, 2009. Applicant submits that the correct patent term adjustment to be indicated on the patent is 601 days, not 389 days as calculated by the Office as of the mailing of the initial determination of patent term adjustment. Applicant requests this correction solely on the basis that the Office will take in excess of three years to issue this patent. The petition is properly treated as an application for patent term adjustment under 37 C.F.R. § 1.705(b).

As the instant application for patent term adjustment requests reconsideration of the patent term adjustment as it relates to the Office's failure to issue the patent within 3 years of the filing date, the application for patent term adjustment under 37 CFR 1.705(b) is **DISMISSED as PREMATURE**.

Knowledge of the actual date the patent issues is required to calculate the amount, if any, of additional patent term patentee is entitled to for Office failure to issue the patent within 3 years. See § 1.702(b). (This is true even where a request for continued examination (RCE) was filed). The computer will not undertake the § 1.702(b) calculation until the actual date of issuance of the patent has been determined. Likewise, the computer will not calculate any further Office delay under § 1.702(a)(4) or applicant delay under § 1.704(c)(10) until the actual date of issuance of the patent has been determined. As such, the Office can not make a determination on the correctness of the patent term adjustment until the patent has issued.

Requesting reconsideration of the patent term adjustment to be indicated on the patent under 37 CFR 1.705(b) based on the initial determination of patent term adjustment and a projected issuance date of the patent (or even the filing date of the request for continued examination) is premature. Accordingly, it is appropriate to dismiss as premature such a request.

Rather than file a request for reconsideration of patent term adjustment under 37 CFR 1.705(b) contesting the 37 CFR 1.702(b) calculation at the time of the mailing of the notice of allowance, applicant is advised that they may wait until the time of the issuance of the patent and file a request for reconsideration of the patent term adjustment pursuant to 37 CFR 1.705(d). As the USPTO does not calculate the amount of time earned pursuant to 37 CFR 1.702(b) until the time of the issuance of the patent, the Office will consider any request for reconsideration of the patent term adjustment due to an error in the calculation of 37 CFR 1.702(b) to be timely if the request for reconsideration is filed within two months of the issuance of the patent. However, as to all other bases for contesting the initial determination of patent term adjustment received with the notice of allowance, applicant must timely file an application for patent term adjustment prior to the payment of the issue fee[1].

The Office acknowledges submission of the $200.00 fee set forth in 37 CFR 1.18(e) for consideration of the application for patent term adjustment under 37 CFR 1.705(b).

Any request for reconsideration of the patent term adjustment indicated on the patent must be timely filed within 2 months after issuance pursuant to 37 CFR 1.705(d) and must include payment of the required fee under 37 CFR 1.18(e).

The Office of Data Management has been advised of this decision. This application is being referred to the Office of Data Management for issuance of the patent.

Telephone inquiries specific to this decision should be directed to Attorney Derek Woods at (571) 272-3232.

/ALESIA M. BROWN/

Alesia Brown
Senior Petitions Attorney
Office of Petitions
Office of the Deputy Commissioner
for Patent Examination Policy

---

[1] For example, if applicant disputes both the calculation of patent term adjustment under 37 CFR 1.702(a)(1) for Office failure to mail a first Office action or notice of allowance not later than fourteen months after the date on which the application was filed and under 37 CFR 1.702(b) for Office failure to issue a patent within three years of the actual filing date of the application, then applicant must still timely file an application for patent term adjustment prior to the payment of the issue fee to contest the calculation of Office delay in issuing a first Office action or notice of allowance. See 37 CFR 1.705(b) and 35 U.S.C. 154(b)(3)(B). A dispute as to the calculation of the §1.702(a)(1) period raised on request for reconsideration of patent term adjustment under 37 CFR 1.705(d) will be dismissed as untimely filed.

UNITED STATES PATENT AND TRADEMARK OFFICE

Commissioner for Patents
United States Patent and Trademark Office
P.O. Box 1450
Alexandria, VA 22313-1450
www.uspto.gov

CISLO & THOMAS LLP
1333 2ND STREET
SUITE 500
SANTA MONICA CA 90401-4110

MAILED

MAR 03 2009

OFFICE OF PETITIONS

In re Application of :

GREEN, Theodore A. :
Application No. 11/410,667 : DECISION ON PETITION
Filed: April 26, 2006 : TO WITHDRAW
Attorney Docket No. T-4851 : FROM RECORD
:

This is a decision on the Request to Withdraw as attorney or agent of record under 37 C.F.R. § 1.36(b), filed February 04, 2009.

The request is **NOT APPROVED**.

The Office has revised its change in procedure for request to withdraw from representation applies to requests filed on or after May 12, 2008.

A grantable request to withdraw as attorney/agent of record must be signed by every attorney/agent seeking to withdraw or contain a clear indication that one attorney is signing on behalf of another/others. The Office requires the practitioner(s) requesting withdrawal to certify that he, she, or they have: (1) given reasonable notice to the client, prior to the expiration of the response period, that the practitioner(s) intends to withdraw from employment; (2) delivered to the client or a duly authorized representative of the client all papers and property (including funds) to which the client is entitled; and (3) notified the client of any responses that may be due and the time frame within which the client must respond, pursuant 37 CFR 10.40(c).

The request cannot be approved because there is no indication that act (2) noted in the above-identified certifications have been performed.

All future communications from the Office will continue to be directed to the above-listed address until otherwise notified by applicant.

Telephone inquiries concerning this decision should be directed to Tredelle Jackson at 571-272- 2783.

Tredelle D. Jackson
Paralegal Specialist
Office of Petitions

cc: THEODORE A. GREEN
13062 PALOMAR STREET
WESTMINSTER CA 92683

UNITED STATES PATENT AND TRADEMARK OFFICE

Commissioner for Patents
United States Patent and Trademark Office
P.O. Box 1450
Alexandria, VA 22313-1450
www.uspto.gov

CISLO & THOMAS LLP
1333 2ND STREET
SUITE 500
SANTA MONICA CA 90401-4110

MAILED

MAR 25 2009

OFFICE OF PETITIONS

In re Application of :

GREEN, Theodore A. :
Application No. 11/410,667 :
Filed: April 26, 2006 :
Attorney Docket No. **T-4851** :

DECISION ON PETITION
TO WITHDRAW
FROM RECORD

This is a decision on the Request to Withdraw as attorney or agent of record under 37 C.F.R. § 1.36(b), filed March 06, 2009.

The request is **APPROVED**.

A grantable request to withdraw as attorney/agent of record must be signed by every attorney/agent seeking to withdraw or contain a clear indication that one attorney is signing on behalf of another/others. The Office requires the practitioner(s) requesting withdrawal to certify that he, she, or they have: (1) given reasonable notice to the client, prior to the expiration of the response period, that the practitioner(s) intends to withdraw from employment; (2) delivered to the client or a duly authorized representative of the client all papers and property (including funds) to which the client is entitled; and (3) notified the client of any responses that may be due and the time frame within which the client must respond, pursuant 37 CFR 10.40(c).

The request was signed by Daniel Cislo on behalf of all attorneys of record who are associated with customer No. 42556. All attorneys/agents associated with the Customer Number 42556 have been withdrawn. Applicant is reminded that there is no attorney of record at this time.

All future correspondence will be directed to the inventor Theodore Green at the address indicated below.

Telephone inquiries concerning this decision should be directed to Tredelle Jackson at 571-272-2783.

Tredelle D. Jackson
Paralegal Specialist
Office of Petitions

cc: **THEODORE A. GREEN**
13062 PALOMAR STREET
WESTMINSTER CA 92683

UNITED STATES PATENT AND TRADEMARK OFFICE

Commissioner for Patents
United States Patent and Trademark Office
P.O. Box 1450
Alexandria, VA 22313-1450
www.uspto.gov

THE PROCTER & GAMBLE COMPANY
INTELLECTUAL PROPERTY DIVISION - WEST BLDG.
WINTON HILL BUSINESS CENTER - BOX 412
6250 CENTER HILL AVENUE
CINCINNATI OH 45224

COPY MAILED

AUG 13 2007

OFFICE OF PETITIONS

In re Application of :
Stickney, et al. :
Application No. 11/410,673 : ON PETITION
Filed: April 25, 2006 :
Attorney Docket No. 9974M :
For: DRYER ADDED ARTICLE FOR LINT
OR HAIR REPULSION ON FABRIC

This is a decision on the petition, filed June 12, 2007, under 37 CFR 1.137(b) to revive the above-identified application.

The petition is **GRANTED**.

The above-identified application became abandoned for failure to timely submit a reply within three (3) months of the mailing of the November 2, 2006 non-final Office action. No response being received and no extensions of time being obtained under the provisions of 37 CFR 1.136(a), this application became abandoned on February 3, 2007. A Notice of Abandonment was mailed on May 7, 2007.

Applicants have submitted an amendment in reply to the November 2, 2006 non-final Office action, an acceptable statement of the unintentional nature of the delay in responding to the November 2, 2006 non-final Office action, and the $1,500.00 petition fee.[1]

All of the requirements under 37 CFR 1.137(b) being met, the petition is granted.

After the mailing of this decision, the application will be returned to Technology Center AU 1751 for consideration of the amendment filed on June 12, 2007.

[1] Deposit account no. 16-2480 will be charged the required $1,500.00 petition fee.

Telephone inquiries should be directed to the undersigned at (571) 272-3230.

Shirene Willis Brantley

Shirene Willis Brantley
Senior Petitions Attorney
Office of Petitions
Office of the Deputy Commissioner
for Patent Examination Policy

UNITED STATES PATENT AND TRADEMARK OFFICE

Commissioner for Patents
United States Patent and Trademark Office
P.O. Box 1450
Alexandria, VA 22313-1450
www.uspto.gov

DAVID SCHAAFSMA
744 STEWART CANYON RD.
FALLBROOK, CA 92028

COPY MAILED

OCT 16 2006

OFFICE OF PETITIONS

In re Application of	:	
Schaafsma, David	:	DECISION ON PETITION
Application No. 11/410,682	:	TO MAKE SPECIAL
Filed: April 25, 2006	:	37 CFR 1.102(D)
Attorney Docket No. AOM-06-003	:	

This is a decision on the petition under 37 CFR 1.102(c) (2)(ii), filed June 15, 2006, to make the above-identified application special based on the invention materially contributing to the development or conservation of energy resources as set forth in M.P.E.P. § 708.02, Section VI.

The petition is **DISMISSED**.

A grantable petition to make an application special under 37 CFR 1.102(c)(ii) and MPEP § 708.02, Section VI: Energy, must state how the invention materially contributes to (A) the discovery or development of energy resources, or (b) the more efficient utilization and conservation of energy resources. If the disclosure is not clear on its face that the claimed invention materially contributes category (A) or (B), the petition must be accompanied by a statement by the applicant, assignee, or an attorney/agent registered to practice before the Office explaining how the materiality standard is met. Examples of inventions in category (A) would be developments in fossil fuels (natural gas, coal, and petroleum), hydrogen fuel technologies, nuclear energy, solar energy, etc. Category (B) would include inventions relating to the reduction of energy consumption in combustion systems, industrial equipment, household appliances, etc. No fee is required.

The instant petition fails to provide a statement or evidence of how the claimed invention contributes to the discovery or development of energy resources.

Telephone inquiries concerning this decision should be directed to Petitions Examiner Liana Chase at 571-272-3206. All other inquiries concerning either the examination or status of the application should be directed to the Technology Center.

This matter is being referred to Technology Center Art Unit 1753 for action in its regular turn.

David Bucci
Petitions Examiner
Office of Petitions

UNITED STATES PATENT AND TRADEMARK OFFICE

UNITED STATES DEPARTMENT OF COMMERCE
United States Patent and Trademark Office
Address: COMMISSIONER FOR PATENTS
P.O. Box 1450
Alexandria, Virginia 22313-1450
www.uspto.gov

FRASER CLEMENS MARTIN & MILLER LLC
28366 KENSINGTON LANE
PERRYSBURG, OH 43551

Mail Date: 05/17/2010

Applicant	: Fred Georg Schroeder	: DECISION ON REQUEST FOR
Patent Number	: 7621568	: RECALCULATION of PATENT
Issue Date	: 11/24/2009	: TERM ADJUSTMENT IN VIEW
Application No	: 11/410,685	: OF WYETH AND NOTICE OF INTENT TO
Filed	: 04/25/2006	: ISSUE CERTIFICATE OF CORRECTION
		:

The Request for Recalculation is **GRANTED** to the extent indicated.

The patent term adjustment has been determined to be **694** days. The USPTO will *sua sponte* issue a certificate of correction reflecting the amount of PTA days determined by the recalculation.

Prior to the issuance of the certificate of correction, the USPTO will afford patentee an opportunity to be heard and request reconsideration. Accordingly, patentee has **one month or thirty (30) days**, whichever is longer, to file a request for reconsideration of this patent term adjustment calculation. See 35 U.S.C. 154(b)(3)(B)(ii) and 37 CFR 1.322(a)(4). No extensions of time will be granted under 37 CFR 1.136.

Patentee should use document code PET.OP if electronically filing a request for reconsideration of this patent term adjustment calculation. The patentee must also include the information required by 37 CFR 1.705(b)(2) and the fee required by 37 CFR 1.18(e). If patentee does not file a timely request for reconsideration of this patent term adjustment calculation including the information required by 37 CFR 1.705(b)(2) and the fee required by 37 CFR 1.18(e), the USPTO will issue a certificate of correction reflecting the PTA determination noted above.

Patentee should be aware that in order to preserve the right to review in the United States District Court for the District of Columbia of the USPTO patent term adjustment determination, patentee must ensure that he or she also take the steps required under 35 U.S.C. 154(b)(4)(A) in a timely manner. Nothing in the request for recalculation should be construed as providing an alternative time frame for commencing a civil action under 35 U.S.C. 154(b)(4)(A).

Any questions concerning this decision should be directed to the Office of Patent Legal Administration at 571-272-7702.

UNITED STATES PATENT AND TRADEMARK OFFICE

Commissioner for Patents
United States Patent and Trademark Office
P.O. Box 1450
Alexandria, VA 22313-1450
www.uspto.gov

SPANSION LLC C/O MURABITO , HAO & BARNES LLP
TWO NORTH MARKET STREET
THRID FLOOR
SAN JOSE CA 95113

COPY MAILED

DEC 0 8 2009

OFFICE OF PETITIONS

In re Application of	:	
Shen et al.	:	
Application No. 11/410,695	:	DECISION ON PETITION
Filed: April 24, 2006	:	
Attorney Docket No. SPSN-AF02119	:	

This is a decision on the petition under the unintentional provisions of 37 CFR 1.137(b), filed October 13, 2009, to revive the above-identified application.

The petition is **GRANTED**.

The application became abandoned for failure to reply in a timely manner to the non-final Office action mailed January 9, 2009, which set a shortened statutory period for reply of three (3) months. No extensions of time under the provisions of 37 CFR 1.136(a) were obtained. Accordingly, the application became abandoned on April 10, 2009. A Notice of Abandonment was mailed July 21, 2009.

The petition satisfies the requirements of 37 CFR 1.137(b) in that petitioner has supplied (1) the reply in the form of an Amendment, (2) the petition fee of $1,620.00, and (3) an adequate statement of unintentional delay.

It is not apparent whether the statement of unintentional delay was signed by a person who would have been in a position of knowing that the **entire** delay in filing the required reply from the due date for the reply until the filing of a grantable petition pursuant to 37 CFR 1.137(b) was unintentional. Nevertheless, in accordance with 37 CFR 10.18, the statement is accepted as constituting a certification of unintentional delay. However, in the event that petitioner has no knowledge that the delay was unintentional, petitioner must make such an inquiry to ascertain that, in fact, the delay was unintentional. If petitioner discovers that the delay was intentional, petitioner must notify the Office.

Telephone inquiries concerning this decision should be directed to the undersigned at (571) 272-7751.

This application is being referred to Technology Center AU 2893 for appropriate action by the Examiner in the normal course of business on the reply received.

Joan Olszewski
Petitions Examiner
Office of Petitions

UNITED STATES PATENT AND TRADEMARK OFFICE

UNITED STATES DEPARTMENT OF COMMERCE
United States Patent and Trademark Office
Address: COMMISSIONER FOR PATENTS
P.O. Box 1450
Alexandria, Virginia 22313-1450
www.uspto.gov

MCDONNELL BOEHNEN HULBERT & BERGHOFF LLP
300 S. WACKER DRIVE
32ND FLOOR
CHICAGO, IL 60606

Mail Date: 04/21/2010

Applicant	: Mark Webster	: DECISION ON REQUEST FOR
Patent Number	: 7627286	: RECALCULATION of PATENT
Issue Date	: 12/01/2009	: TERM ADJUSTMENT IN VIEW
Appliction No	: 11/410,707	: OF WYETH AND NOTICE OF INTENT TO
Filed	: 04/25/2006	: ISSUE CERTIFICATE OF CORRECTION
		:

The Request for Recalculation is **GRANTED** to the extent indicated.

The patent term adjustment has been determined to be **390** days. The USPTO will *sua sponte* issue a certificate of correction reflecting the amount of PTA days determined by the recalculation.

Prior to the issuance of the certificate of correction, the USPTO will afford patentee an opportunity to be heard and request reconsideration. Accordingly, patentee has **one month or thirty (30) days**, whichever is longer, to file a request for reconsideration of this patent term adjustment calculation. See 35 U.S.C. 154(b)(3)(B)(ii) and 37 CFR 1.322(a)(4). No extensions of time will be granted under 37 CFR 1.136.

Patentee should use document code PET.OP if electronically filing a request for reconsideration of this patent term adjustment calculation. The patentee must also include the information required by 37 CFR 1.705(b)(2) and the fee required by 37 CFR 1.18(e). If patentee does not file a timely request for reconsideration of this patent term adjustment calculation including the information required by 37 CFR 1.705(b)(2) and the fee required by 37 CFR 1.18(e), the USPTO will issue a certificate of correction reflecting the PTA determination noted above.

Patentee should be aware that in order to preserve the right to review in the United States District Court for the District of Columbia of the USPTO patent term adjustment determination, patentee must ensure that he or she also take the steps required under 35 U.S.C. 154(b)(4)(A) in a timely manner. Nothing in the request for recalculation should be construed as providing an alternative time frame for commencing a civil action under 35 U.S.C. 154(b)(4)(A).

Any questions concerning this decision should be directed to the Office of Patent Legal Administration at 571-272-7702.

UNITED STATES PATENT AND TRADEMARK OFFICE

OFFICE OF DATA MANAGEMENT

KAMRATH & ASSOCIATES P.A.
4825 OLSON MEMORIAL HIGHWAY
SUITE 245
GOLDEN VALLEY MN 55422

SEP 2 2 2008

In re Application of :
HSU, CHUN-CHING :
Application No. 11/410,710 :
Filed: April 25, 2006 :
Attorney Docket No. CFP-018574 (20060397.ORI) :

DECISION ON PETITION

This is a decision on the Petition To Withdraw Holding Of Notice Of Abandonment received in the United States Patent and Trademark Office (USPTO) on September 2, 2008.

The petition is **GRANTED**.

The application was held abandoned for failure to timely pay the issue fee as required by the Notice of Allowance and Fee(s) Due, mailed May 5, 2008, which set forth a three (3) month statutory period for reply. Accordingly, the Notice of Abandonment was mailed on August 29, 2008.

Petitioner states that the Applicants responded by timely paying the Issue Fee on July 19, 2008.

In view of the foregoing, the holding of abandonment for failure to timely pay the issue fee is hereby withdrawn and the application restored to pending status.

Telephone inquires concerning this decision be directed to the undersigned in the Office of Data Management at 703-305-9250 x 175.

Kay D. Pinkney
Application Assistance Unit
Office of Data Management

UNITED STATES PATENT AND TRADEMARK OFFICE

UNITED STATES DEPARTMENT OF COMMERCE
United States Patent and Trademark Office
Address: COMMISSIONER FOR PATENTS
P.O. Box 1450
Alexandria, Virginia 22313-1450
www.uspto.gov

APPL NO.	FILING OR 371 (c) DATE	ART UNIT	FIL FEE REC'D	ATTY.DOCKET NO	DRAWINGS	TOT CLMS	IND CLMS
11/410,745	04/25/2006	1615	840	INPHAR.005A	5	31	1

CONFIRMATION NO. 4743

20995
KNOBBE MARTENS OLSON & BEAR LLP
2040 MAIN STREET
FOURTEENTH FLOOR
IRVINE, CA 92614

UPDATED FILING RECEIPT

OC000000019792018

Date Mailed: 07/27/2006

Receipt is acknowledged of this regular Patent Application. It will be considered in its order and you will be notified as to the results of the examination. Be sure to provide the U.S. APPLICATION NUMBER, FILING DATE, NAME OF APPLICANT, and TITLE OF INVENTION when inquiring about this application. Fees transmitted by check or draft are subject to collection. Please verify the accuracy of the data presented on this receipt. **If an error is noted on this Filing Receipt, please mail to the Commissioner for Patents P.O. Box 1450 Alexandria Va 22313-1450. Please provide a copy of this Filing Receipt with the changes noted thereon. If you received a "Notice to File Missing Parts" for this application, please submit any corrections to this Filing Receipt with your reply to the Notice. When the USPTO processes the reply to the Notice, the USPTO will generate another Filing Receipt incorporating the requested corrections (if appropriate).**

Applicant(s)

David J. Smith, San Diego, CA;
Mark J. Badria, San Diego, CA;
Ollen Williams JR., El Cajon, CA;
Ludwig J. Weimann, Burlington, VT;

Power of Attorney: None

Domestic Priority data as claimed by applicant

Foreign Applications
If Required, Foreign Filing License Granted: 05/19/2006

The country code and number of your priority application, to be used for filing abroad under the Paris Convention, is US11/410,745

Projected Publication Date: 10/25/2007

Non-Publication Request: No

Early Publication Request: No

**** SMALL ENTITY ****

Title

Multi-compartment transdermal pain control device

Preliminary Class

424

PROTECTING YOUR INVENTION OUTSIDE THE UNITED STATES

Since the rights granted by a U.S. patent extend only throughout the territory of the United States and have no effect in a foreign country, an inventor who wishes patent protection in another country must apply for a patent in a specific country or in regional patent offices. Applicants may wish to consider the filing of an international application under the Patent Cooperation Treaty (PCT). An international (PCT) application generally has the same effect as a regular national patent application in each PCT-member country. The PCT process **simplifies** the filing of patent applications on the same invention in member countries, but **does not result** in a grant of "an international patent" and does not eliminate the need of applicants to file additional documents and fees in countries where patent protection is desired.

Almost every country has its own patent law, and a person desiring a patent in a particular country must make an application for patent in that country in accordance with its particular laws. Since the laws of many countries differ in various respects from the patent law of the United States, applicants are advised to seek guidance from specific foreign countries to ensure that patent rights are not lost prematurely.

Applicants also are advised that in the case of inventions made in the United States, the Director of the USPTO must issue a license before applicants can apply for a patent in a foreign country. The filing of a U.S. patent application serves as a request for a foreign filing license. The application's filing receipt contains further information and guidance as to the status of applicant's license for foreign filing.

Applicants may wish to consult the USPTO booklet, "General Information Concerning Patents" (specifically, the section entitled "Treaties and Foreign Patents") for more information on timeframes and deadlines for filing foreign patent applications. The guide is available either by contacting the USPTO Contact Center at 800-786-9199, or it can be viewed on the USPTO website at http://www.uspto.gov/web/offices/pac/doc/general/index.html.

For information on preventing theft of your intellectual property (patents, trademarks and copyrights), you may wish to consult the U.S. Government website, http://www.stopfakes.gov. Part of a Department of Commerce initiative, this website includes self-help "toolkits" giving innovators guidance on how to protect intellectual property in specific countries such as China, Korea and Mexico. For questions regarding patent enforcement issues, applicants may call the U.S. Government hotline at 1-866-999-HALT (1-866-999-4158).

LICENSE FOR FOREIGN FILING UNDER
Title 35, United States Code, Section 184
Title 37, Code of Federal Regulations, 5.11 & 5.15

GRANTED

The applicant has been granted a license under 35 U.S.C. 184, if the phrase "IF REQUIRED, FOREIGN FILING LICENSE GRANTED" followed by a date appears on this form. Such licenses are issued in all applications where the conditions for issuance of a license have been met, regardless of whether or not a license may be required as set forth in 37 CFR 5.15. The scope and limitations of this license are set forth in 37 CFR 5.15(a) unless an earlier license has been issued under 37 CFR 5.15(b). The license is subject to revocation upon written notification. The date indicated is the effective date of the license, unless an earlier license of similar scope has been granted under 37 CFR 5.13 or 5.14.

This license is to be retained by the licensee and may be used at any time on or after the effective date thereof

unless it is revoked. This license is automatically transferred to any related applications(s) filed under 37 CFR 1.53(d). This license is not retroactive.

The grant of a license does not in any way lessen the responsibility of a licensee for the security of the subject matter as imposed by any Government contract or the provisions of existing laws relating to espionage and the national security or the export of technical data. Licensees should apprise themselves of current regulations especially with respect to certain countries, of other agencies, particularly the Office of Defense Trade Controls, Department of State (with respect to Arms, Munitions and Implements of War (22 CFR 121-128)); the Bureau of Industry and Security, Department of Commerce (15 CFR parts 730-774); the Office of Foreign Assets Control, Department of Treasury (31 CFR Parts 500+) and the Department of Energy.

NOT GRANTED

No license under 35 U.S.C. 184 has been granted at this time, if the phrase "IF REQUIRED, FOREIGN FILING LICENSE GRANTED" DOES NOT appear on this form. Applicant may still petition for a license under 37 CFR 5.12, if a license is desired before the expiration of 6 months from the filing date of the application. If 6 months has lapsed from the filing date of this application and the licensee has not received any indication of a secrecy order under 35 U.S.C. 181, the licensee may foreign file the application pursuant to 37 CFR 5.15(b).

UNITED STATES PATENT AND TRADEMARK OFFICE

Commissioner for Patents
United States Patent and Trademark Office
P.O. Box 1450
Alexandria, VA 22313-1450
www.uspto.gov

CANTOR COLBURN, LLP
20 Church Street
22nd Floor
Hartford CT 06103

COPY MAILED

JUL 0 2 2009

OFFICE OF PETITIONS

In re Patent of :
Lee, et al. :
Patent No. 7,473,514 :
Issue Date: January 6, 2009 :
Application No. 11/410,766 :
Filing Date: April 25, 2006 :
Attorney Docket No. PHO0015US :

Decision on Petition

This is a decision on the petition captioned under 37 CFR § 1.183, filed May 12, 2009, to waive the rules and accept the correction of the assignee data on the front page of the above-identified patent. The petition is being treated as a request under 37 CFR 3.81 to accept the correction of the assignee data.

The request under 37 CFR 3.81 is **dismissed**.

Any request for reconsideration of this decision must be submitted within TWO (2) MONTHS from the mail date of this decision. Extensions of time under 37 CFR 1.136(a) are permitted. Petitioners are advised that this is not a final agency decision.

Effective June 25, 2004, 37 CFR 3.81(b) has been revised to no longer require the correction of the assignee data prior to issuance of the patent. Therefore, a petition to waive the rule is unnecessary. 37 CFR 3.81(b) currently states:

> Any request for issuance of an application in the name of the assignee submitted after the date of payment of the issue fee, and any request for a patent to be corrected to state the name of the assignee, must state that the assignment was submitted for recordation as set forth in § 3.11 before issuance of the patent, and must include a request for a certificate of correction under § 1.323 of this chapter (accompanied by the fee set forth in § 1.20(a)) and the processing fee set forth in § 1.17(I) of this chapter.

In other words, the request under 37 CFR 3.81(b) will be granted when:

(1) a request under 37 CFR 3.81 and the fee set forth in 37 CFR 1.17(i) are filed,
(2) the assignment was submitted for recordation prior to issuance of the patent, and

(3) a request for a certificate of correction and the fee set forth in 37 CFR 1.20(a) are submitted.

Petitioners have not met the requirements set forth above because the corrective assignment was submitted for recordation on May 13, 2009, which is after issuance of the patent. Therefore, the request is dismissed.

Further correspondence with respect to this matter should be addressed as follows:

By mail: Mail Stop PETITION
Commissioner for Patents
Post Office Box 1450
Alexandria, VA 22313-1450

By hand: U.S. Patent and Trademark Office
Customer Service Window, Mail Stop Petition
Randolph Building
401 Dulany Street
Alexandria, VA 22314

By FAX: (571) 273-8300 – ATTN: Office of Petitions

Telephone inquiries concerning this decision should be directed to the undersigned at (571) 272-3230.

Shirene Willis Brantley

Shirene Willis Brantley
Senior Petitions Attorney
Office of Petitions

UNITED STATES PATENT AND TRADEMARK OFFICE

Commissioner for Patents
United States Patent and Trademark Office
P.O. Box 1450
Alexandria, VA 22313-1450
www.uspto.gov

WOODCOCK WASHBURN LLP
CIRA CENTRE, 12TH FLOOR
2929 ARCH STREET
PHILADELPHIA PA 19104-2891

COPY MAILED

APR 14 2008

OFFICE OF PETITIONS

In re Application of:	:	
Hamid et al.	:	
Application No. 11/410792	:	DECISION DISMISSING
Filing or 371(c) Date 04/25/2006	:	PETITION UNDER
Attorney Docket Number: IVPH-0764	:	37 CFR 1.47(a)

This is in response to a petition under 37 CFR 1.47(a), filed December 26, 2006. The petition is properly treated under 37 CFR 1.47(b), to allow a person to whom an inventor has assigned or agreed in writing to assign the invention, or who otherwise shows sufficient proprietary interest in the matter justifying such action, to make application on behalf of and as agent for all inventors. The delay in treating this petition is regretted.

The petition is **dismissed as moot**.

The above-identified application was filed on April 25, 2006, without, a fully executed oath or declaration. In response, this office mailed a Notice to File Missing parts of Nonprovisional Application on May 19, 2007, requiring, *inter alia*, an executed oath/declaration.

Applicant filed the present petition and unexecuted oath/declaration in response to the Notice.

A review of the application file reveals that the present application was expressly abandoned in favor of continuing application 11/681,090 on March 30, 2007.

In view of the foregoing, the petition is dismissed as moot.

Further correspondence with respect to this matter should be addressed as follows:

By mail: Director for Patents
PO Box 1450
Alexandria, VA 22313-1450

By FAX: (571) 273-8300
Attn: Office of Petitions

By hand: Customer Service Window
Randolph Building
401 Dulany Street
Alexandria, VA 22314

Telephone inquiries concerning this matter should be directed to the undersigned at (571) 272-3232.

Derek L. Woods
Attorney
Office of Petitions

UNITED STATES PATENT AND TRADEMARK OFFICE

Commissioner for Patents
United States Patent and Trademark Office
P.O. Box 1450
Alexandria, VA 22313-1450
www.uspto.gov

THE PROCTER & GAMBLE COMPANY
INTELLECTUAL PROPERTY DIVISION - WEST BLDG.
WINTON HILL BUSINESS CENTER - BOX 412
6250 CENTER HILL AVENUE
CINCINNATI OH 45224

COPY MAILED

FEB 08 2008

OFFICE OF PETITIONS

In re Application of :
CHAN, et al. :
Application No. 11/410,808 : DECISION GRANTING PETITION
Filed: April 25, 2006 : UNDER 37 CFR 1.313(c)(2)
Attorney Docket No. 9186CL :

This is a decision on the petition under 37 CFR 1.313(c)(2), filed February 4, 2008, to withdraw the above-identified application from issue after payment of the issue fee.

The petition is **GRANTED.**

The above-identified application is withdrawn from issue for consideration of a submission under 37 CFR 1.114 (request for continued examination). *See* 37 CFR 1.313(c)(2).

Petitioner is advised that the issue fee paid on January 18, 2008, in the above-identified application, cannot be refunded. If, however, the application is again allowed, petitioner may request that it be applied towards the issue fee required by the new Notice of Allowance.[1]

Telephone inquiries should be directed to Monica A. Graves at (571) 272-7253.

This application is being referred to Technology Center AU 3723 for processing of the request for continued examination under 37 CFR 1.114 and for consideration of the concurrently filed information disclosure statement.

Sherry D. Brinkley
Petitions Examiner
Office of Petitions

[1] *The request to apply the issue fee to the new Notice may be satisfied by completing and returning the new Part B – Fee(s) Transmittal Form (along with any balance due at the time of submission). Petitioner is advised that the Issue Fee Transmittal Form must be completed and timely submitted to avoid abandonment of the application.*

SPE RESPONSE FOR CERTIFICATE OF CORRECTION

Paper No.: _____

DATE : 3/12/09

TO SPE OF : ART UNIT 2878

SUBJECT : Request for Certificate of Correction for Appl. No.: 11410812 Patent No.: 7491922 B1

Please respond to this request for a certificate of correction within 7 days.

FOR IFW FILES:

Please review the requested changes/corrections as shown in the **COCIN** document(s) in the IFW application image. No new matter should be introduced, nor should the scope or meaning of the claims be changed.

Please complete the response (see below) and forward the completed response to scanning using document code **COCX**.

FOR PAPER FILES:

Please review the requested changes/corrections as shown in the attached certificate of correction. Please complete this form (see below) and forward it with the file to:

Certificates of Correction Branch (CofC)
South Tower - 9A22
Palm Location 7580
You can fax the Directors/SPE response to 571-270-9990

LAMONTE NEWSOME
Certificates of Correction Branch
703-308-9390 ext. 112

Thank You For Your Assistance

The request for issuing the above-identified correction(s) is hereby:
Note your decision on the appropriate box.

☑ **Approved**	**All** changes apply.
☐ **Approved in Part**	Specify below which changes **do not** apply.
☐ **Denied**	State the reasons for denial below.

Comments: _____

_____

_____

_____

_____

Georgia Y. Epps — SPE

2878 — Art Unit

SPE RESPONSE FOR CERTIFICATE OF CORRECTION

Paper No.: _____

DATE : 3/12/09

TO SPE OF : ART UNIT 2878

SUBJECT : Request for Certificate of Correction for Appl. No.: 11410812 Patent No.: 7491922 B1

Please respond to this request for a certificate of correction within 7 days.

FOR IFW FILES:

Please review the requested changes/corrections as shown in the **COCIN** document(s) in the IFW application image. No new matter should be introduced, nor should the scope or meaning of the claims be changed.

Please complete the response (see below) and forward the completed response to scanning using document code **COCX**.

FOR PAPER FILES:

Please review the requested changes/corrections as shown in the attached certificate of correction. Please complete this form (see below) and forward it with the file to:

Certificates of Correction Branch (CofC)
South Tower - 9A22
Palm Location 7580
You can fax the Directors/SPE response to 571-270-9990

LAMONTE NEWSOME
Certificates of Correction Branch
703-308-9390 ext. 112

Thank You For Your Assistance

The request for issuing the above-identified correction(s) is hereby:
Note your decision on the appropriate box.

☑ **Approved**	**All** changes apply.
☐ **Approved in Part**	Specify below which changes **do not** apply.
☐ **Denied**	State the reasons for denial below.

Comments: _____

APPROVED
By Georgia Y. Epps at 11:07 am, Mar 16, 2009

SPE **Art Unit**

JUN 19 2006
PATENT & TRADEMARK OFFICE

IN THE UNITED STATES PATENT AND TRADEMARK OFFICE

In re application of:	Jeffrey M. Kudrick	Group Art Unit:	~~3635~~ 1732
Serial No.:	11/410,830	Examiner:	N/A
Filed:	April 25, 2006		
For:	**"PREFABRICATED LIGHTWEIGHT CONCRETE STRUCTURE INCLUDING COLUMNS"**		
Matter No.:	0277-1		

Bedminster, N.J. 07921
June 16, 2006

Commissioner for Patents
P.O. Box 1450
Alexandria, VA 22313-1450

ATTENTION: Group Director, Group 3635

Sir:

PETITION TO MAKE SPECIAL FOR NEW APPLICATION UNDER M.P.E.P. § 708.02 (VIII)

Applicant hereby petitions to make special this new application. The application has not yet been examined by the United States Patent and Trademark Office (the "Office").

Applicant submits that all of the claims in this case are directed to a single invention. If the Office determines that all claims presented are not obviously directed to a single invention, then applicant will make an election, without traverse, as a prerequisite to the grant of special status.

A pre-examination search of the subject matter encompassed by the above-identified application has been made by a professional searcher. The pre-examination search was conducted in the United States Patent and Trademark Office. The patentability search regarding the above-identified application focused on issued U.S. utility patents and published foreign patent applications. Additionally, a computer database search was conducted on the USPTO systems EAST and WEST for U.S. patents. Additionally, an Internet search was conducted for non-patent literature. The field of search covered the following

06/20/2006 RFEKADU1 00000018 11410830
01 FC:1464 130.00 OP

PETITION GRANTED

William Krynski
Special Program Examiner
Technology Center 1700
SEP 19 2006

UNITED STATES PATENT AND TRADEMARK OFFICE

Commissioner for Patents
United States Patent and Trademark Office
P.O. Box 1450
Alexandria, VA 22313-1450
www.uspto.gov

WARNER J. DELAUNE JR.
BAKER DONELSON BEARMAN
CALDWELL & BERKOWITZ
301 N. MAIN STREET, SUITE 810
BATON ROUGE, LA 70825

COPY MAILED

SEP 0 8 2008

OFFICE OF PETITIONS

In re Application of :
Bryan R. PAYNE, et al :
Application No. 11/410,860 : DECISION ON PETITION
Filed: April 24, 2006 : TO WITHDRAW
Attorney Docket No. 11575-1 : FROM RECORD

This is a decision on the Request to Withdraw as attorney or agent of record under 37 C.F.R. § 1.36(b), filed May 22, 2008.

The request is **NOT APPROVED** as moot.

A review of the file record indicates that the power of attorney to Warner J. Delaune, Jr., Baker Donelson Bearman, Caldwell & Berkowitz, has been revoked by the applicant of the patent application on July 31, 2008. Accordingly, the request to withdraw under 37 C.F.R. § 1.36(b) is moot.

All future communications from the Office will be directed to the address indicated below until otherwise properly notified by the applicant.

Telephone inquires concerning this decision should be directed to the undersigned at 571-272-6735.

Diane Goodwyn
Petitions Examiner
Office of Petitions

cc : BRYAN R. PAYNE, MD
MARSHALL UNIVERSITY/CHAIRMAN
DEPART OF NEUROSCIENCE,
1600 MEDICAL CENTER DRIVE, SUITE G500
HUNTINGTON, WV 25701

UNITED STATES PATENT AND TRADEMARK OFFICE

Commissioner for Patents
United States Patent and Trademark Office
P.O. Box 1450
Alexandria, VA 22313-1450
www.uspto.gov

MAILED

APR 05 2010

OFFICE OF PETITIONS

SINORICA, LLC
2275 Research Blvd.
Suite 500
ROCKVILLE MD 20850

In re Application of :
Chih-Ching HSIEH :
Application No. 11/410,866 : DECISION ON PETITION
Filed: April 26, 2006 :
Attorney Docket No. TW-VLA-0665 :

This is a decision on the petition, filed October 1, 2009, which is being treated as a petition under 37 CFR 1.181 (no fee) requesting withdrawal of the holding of abandonment in the above-identified application.

The petition is **GRANTED**.

This application was held abandoned for failure to timely pay the issue and publication fees on or before June 11, 2009, as required by the Notice of Allowance and Fee(s) Due (Notice), mailed March 11, 2009.

Petitioner asserts that an email notification for the Notice dated March 11, 2009 was not received.

A review of the record shows that an email notification for the Notice dated March 11, 2009 was not sent.

In view of the above, the Notice of Abandonment is hereby vacated and the holding of abandonment withdrawn.

This application is being referred to the Technology Center AU 2885 technical support staff for **re-mailing** the Notice of Allowability and the Notice of Allowance and Fee(s) Due of March 11, 2009. The period for paying the issue and publication fees and submitting corrected drawings will be reset to expire three (3) months from the date the Notices are re-mailed. This period is not extendable under the provisions of 37 CFR 1.136.

Telephone inquiries concerning this decision should be directed to Olisa Anwah at (571) 272-6051 or in his absence, the undersigned at (571) 272-7099.

David A. Bucci
Petitions Examiner
Office of Petitions

UNITED STATES PATENT AND TRADEMARK OFFICE

Commissioner for Patents
United States Patent and Trademark Office
P.O. Box 1450
Alexandria, VA 22313-1450
www.uspto.gov

SINORICA, LLC
2275 RESEARCH BLVD.
SUITE 500
ROCKVILLE, MD 20850

MAILED

MAY 14 2010

OFFICE OF PETITIONS

In re Application of
Chih-Ching Hsieh
Application No. 11/410,866
Filed: April 26, 2006
Attorney Docket No. TW-VLA-0665

DECISION ON PETITION
UNDER 37 CFR 1.313(c)(1)

This is a decision on the petition under 37 CFR 1.313(c), filed May 12, 2010, to withdraw the above-identified application from issue after payment of the issue fee.

The petition is **DISMISSED**.

37 CFR 1.313(c) provides that:

Once the issue fee has been paid, the application will not be withdrawn from issue upon petition by the applicant for any reason except:

(1) Unpatentability of one of more claims, which petition must be accompanied by an unequivocal statement that one or more claims are unpatentable, an amendment to such claim or claims, and an explanation as to how the amendment causes such claim or claims to be patentable;

(2) Consideration of a request for continued examination in compliance with 37 CFR 1.114; or

(3) Express abandonment of the application. Such express abandonment may be in favor of a continuing application.

Upon payment of the issue fee, an application will not be withdrawn from issue upon petition except for the reasons enumerated in 37 CFR 1.313(c). The circumstances of the above-identified application do not fall within any of those exceptions.

For the reason stated above, the petition under 37 CFR 1.313(c) cannot be granted.

Petitioner is reminded that the filing of any renewed petition to withdraw from issue may not be recognized or effective if not received by the appropriate deciding official in time to act prior to issuance. *Note* 37 CFR 1.313(d). It is recommended that the facsimile number listed below be used to file the renewed petition.

Further correspondence with respect to this matter should be addressed as follows:

By mail:	Mail Stop PETITIONS Commissioner for Patents Post Office Box 1450 Alexandria, VA 22313-1450
By hand:	Customer Service Window Mail Stop Petitions Randolph Building 401 Dulany Street Alexandria, VA 22314
By fax:	**(571) 273-0025** **Office of Petitions**

Any questions concerning this matter may be directed to undersigned at (571) 272-1642.

/AMW/
April M. Wise
Petitions Examiner
Office of Petitions

UNITED STATES PATENT AND TRADEMARK OFFICE

Commissioner for Patents
United States Patent and Trademark Office
P.O. Box 1450
Alexandria, VA 22313-1450
www.uspto.gov

SINORICA, LLC
2275 RESEARCH BLVD.
SUITE 500
ROCKVILLE, MD 20850

MAILED

JUN 01 2010

OFFICE OF PETITIONS

In re Application of	:	
Chih-Ching Hsieh	:	CORRECTED
Application No. 11/410,866	:	DECISION DISMISSING PETITION
Filed: April 26, 2006	:	UNDER 37 CFR 1.313(a)
Attorney Docket No. TW-VLA-0665	:	

This is a corrected decision on the petition under 37 CFR 1.313(b), filed May 12, 2010, which is properly being treated as a petition under 37 CFR 1.313(a) to withdraw the above-identified application from issue.

The petition is **DISMISSED** as moot for the reasons stated below.

Petitioner requests that the present application be withdrawn from issue due to Office mistake in not considering the amendment filed on February 27, 2010.

The reason for the requested withdrawal from issue has been removed in view of the Examiner's consideration of the amendment in a communication mailed to applicant on June 1, 2010.

Further correspondence with respect to this matter should be addressed as follows:

By mail: Mail Stop PETITIONS
Commissioner for Patents
Post Office Box 1450
Alexandria, VA 22313-1450

By hand: Customer Service Window
Mail Stop Petitions
Randolph Building
401 Dulany Street
Alexandria, VA 22314

By fax: (571) 273-8300
ATTN: Office of Petitions

Telephone inquiries concerning this matter may be directed to undersigned at (571) 272-1642. All other inquiries concerning this application should be directed to the Technology Center.

This application is being forwarded to the Office of Data Management via the Technology Center to await payment of the Issue Fee.

/AMW/
April M. Wise
Petitions Examiner
Office of Petitions

UNITED STATES PATENT AND TRADEMARK OFFICE

Commissioner for Patents
United States Patent and Trademark Office
P.O. Box 1450
Alexandria, VA 22313-1450
www.uspto.gov

CHIH-CHING HSIEH
235 CHUNG-HO
BOX 8-24
TAIPEI TW TAIWAN

COPY MAILED

OCT 2 7 2008

OFFICE OF PETITIONS

In re Application of	:	
Chih-Ching Hsieh	:	
Application No. 11/410,868	:	DECISION ON PETITION
Filed: April 26, 2006	:	
Attorney Docket No. J5P6024-GFP-953619	:	

This is a decision on the petition under the unintentional provisions of 37 CFR 1.137(b), filed October 15, 2008, to revive the above-identified application.

The petition is **GRANTED**.

The application became abandoned for failure to reply in a timely manner to the non-final Office action mailed May 18, 2007, which set a shortened statutory period for reply of three (3) months. No extensions of time under the provisions of 37 CFR 1.136(a) were obtained. Accordingly, the application became abandoned on July 18, 2007. A Notice of Abandonment was mailed April 1, 2008.

The petition satisfies the requirements of 37 CFR 1.137(b) in that petitioner has supplied (1) the reply in the form of an Amendment, (2) the petition fee of $810.00, and (3) an adequate statement of unintentional delay.

Telephone inquiries concerning this decision should be directed to Joan Olszewski at (571) 272-7751.

This application is being referred to Technology Center AU 3723 for appropriate action by the Examiner in the normal course of business on the reply received.

/Liana Walsh/
Liana Walsh
Petitions Examiner
Office of Petitions

UNITED STATES PATENT AND TRADEMARK OFFICE

Commissioner for Patents
United States Patent and Trademark Office
P.O. Box 1450
Alexandria, VA 22313-1450
www.uspto.gov

BANNER & WITCOFF, LTD.
ATTORNEYS FOR CLIENT NO. 016689
1100 13th STREET, N.W.
SUITE 1200
WASHINGTON, DC 20005-4051

MAILED

MAY 28 2010

OFFICE OF PETITIONS

In re Application of :
Isao Kishi :
Application No.: 11/410,942 : ON PETITION
Filed: April 26, 2006 :
Attorney Docket No.: 006797.00042 :

This is a decision on the petition, filed May 27, 2010, under 37 CFR 1.313(c)(2) to withdraw the above-identified application from issue after payment of the issue fee.

The petition is **GRANTED**.

The above-identified application is withdrawn from issue for consideration of a submission under 37 CFR 1.114 (request for continued examination). See 37 CFR 1.313(c)(2).

Petitioner is advised that the issue fee paid on March 12, 2010, cannot be refunded. If, however, this application is again allowed, petitioner may request that it be applied towards the issue fee required by the new Notice of Allowance.[1]

Telephone inquiries relating to this decision should be directed to the undersigned at (571) 272-3204.

The application is being referred to Technology Center AU 2861 for further processing of the request for continued examination under 37 CFR 1.114 and for consideration of the concurrently filed Information Disclosure Statement (IDS).

/SDB/

Sherry D. Brinkley
Petitions Examiner
Office of Petitions

[1] *The request to apply the issue fee to the new Notice may be satisfied by completing and returning the new Part B – Fee(s) Transmittal Form (along with any balance due at the time of submission). Petitioner is advised that the Issue Fee Transmittal Form must be completed and timely submitted to avoid abandonment of the application.*

UNITED STATES PATENT AND TRADEMARK OFFICE

COMMISSIONER FOR PATENTS
UNITED STATES PATENT AND TRADEMARK OFFICE
P.O. BOX 1450
ALEXANDRIA, VA 22313-1450
WWW.USPTO.GOV

Paper No. None

REED SMITH LLP
Suite 1400
3110 Fairview Park Drive
Falls Church VA 22042

COPY MAILED

DEC 11 2006

OFFICE OF PETITIONS

In re Application of :
Takeshi Hoshino et al. :
Application No. 11/410,960 : DECISION ON PETITION
Filed: April 26, 2006 :
Attorney Docket No. NITT.0331 :
Title: DISPLAY APPARATUS AND :
IMAGE PICKUP APPARATUS :

This is a decision on the submission of June 8, 2006, requesting that the above-identified application be accorded a filing date of April 26, 2006, with a concurrently filed specification as part of the original disclosure of the application. This submission is properly treated as a petition under 37 C.F.R. §1.182.

The application was deposited on April 26, 2006. However, on May 23, 2006, the Office of Initial Patent Examination (OIPE) mailed a "Notice to File Missing Parts of Nonprovisional Application - Filing Date Granted" (notice) stating that the application had been accorded a filing date of April 26, 2006, and advising applicants that the application appeared to have been deposited without Figures 7b, 8b, 8c, 9b, 9c, and 23b. The notice set a two-month period for response.

On June 8, 2006, the present petition was filed, along with a substitute specification and the petition fee.

The present application is a continuation of 10/928,196, which is a continuation-in-part of application number 10/785,051. Petitioner has explained that when filing the present

application, he filed the wrong specification - he intended to file the specification that is associated with the parent of the present application (10/928,196), but instead filed the specification that is associated with the grandparent of the present application (10/785,051).

Petitioner has asserted that the correct specification was constructively included, through incorporation by reference.

The Office allows an applicant to rely upon an incorporation by reference of a parent application when a portion of the child application has been inadvertently omitted. The "Continuation/Divisional Application Transmittal" sheet has been located in the electronic file. This sheet indicates that the present application is a continuation of prior application 10/928,196, and that the entire disclosure of this previous application has been incorporated by reference.

Section 201.06(c) of the MPEP sets forth, in part:

> an applicant may incorporate by reference the prior application by including, in the continuation or divisional application-as-filed, a statement that such specifically enumerated prior application or applications are "hereby incorporated herein by reference." The statement may appear in the specification or in the application transmittal letter. The incorporation by reference statement can only be relied upon to permit the entering of a portion of the prior application into the continuation or divisional application when the portion of the prior application has been inadvertently omitted from the submitted application papers in the continuation or divisional application. The inclusion of this incorporation by reference of the prior application(s) will permit an applicant to amend the continuation or divisional application to include any subject matter in such prior application(s), without the need for a petition (emphasis added) provided the continuation or divisional application is entitled to a filing date notwithstanding the incorporation by reference.

For this reason, the petition under 37 C.F.R. §1.182 is **DISMISSED.**

The application will receive a filing date of April 26, 2006, however, the substitute specification submitted with the present petition will not be entered. If Petitioner desires for this specification to be included, he should submit the same via an amendment. This amendment, of course, will not be entered until it has been reviewed by the Examiner for new matter[1]. The amendment is not new matter if the substance was a part of the disclosure of the prior application.

---

1 See MPEP 608.02(a).

The original application papers will include only those application papers present on the date of deposit.

The petition fee of $400.00 will not be refunded, as this petition was not necessitated by any error on the part of the Office.

Telephone inquiries regarding *this decision* should be directed to the undersigned at (571) 272-3225[2]. All other inquiries concerning examination procedures or status of the application should be directed to the Technology Center.

Paul Shanoski
Senior Attorney
Office of Petitions
United States Patent and Trademark Office

2 Petitioner will note that all practice before the Office should be in writing, and the action of the Office will be based exclusively on the written record in the Office. See 37 C.F.R. §1.2. As such, Petitioner is reminded that no telephone discussion may be controlling or considered authority for Petitioner's further action(s).

UNITED STATES PATENT AND TRADEMARK OFFICE

UNITED STATES DEPARTMENT OF COMMERCE
United States Patent and Trademark Office
Address: COMMISSIONER FOR PATENTS
P.O. Box 1450
Alexandria, Virginia 22313-1450
www.uspto.gov

APPLICATION NO.	FILING DATE	FIRST NAMED INVENTOR	ATTORNEY DOCKET NO.	CONFIRMATION NO.
11/410,971	04/26/2006	Jerome Dido	4005-0279PUS1	5973

60601 7590 11/03/2008

Muncy, Geissler, Olds & Lowe, PLLC
P.O. BOX 1364
FAIRFAX, VA 22038-1364

EXAMINER	
GISSEL, GUNNAR J	

ART UNIT	PAPER NUMBER
2856	

MAIL DATE	DELIVERY MODE
11/03/2008	PAPER

Please find below and/or attached an Office communication concerning this application or proceeding.

The time period for reply, if any, is set in the attached communication.

UNITED STATES PATENT AND TRADEMARK OFFICE

COMMISSIONER FOR PATENTS
UNITED STATES PATENT AND TRADEMARK OFFICE
P.O. BOX 1450
ALEXANDRIA, VA 22313-1450
www.uspto.gov

In re Application of DIDO ET AL.
Appl. No.: 11/410,971
Filed: April 26, 2006
For: THERMAL CELL SYSTEM FOR MEASURING ACCELERATION

Decision on Petition
37 CFR 1.48(a)

OCT 31 2008

This decision is in response to the petition filed September 19, 2008 in the above-identified application. The petition seeks to correction inventorship pursuant to 37 CFR 1.48(a).

In view of the papers filed September 19, 2008, it has been found that the patent application, as originally filed, through error and without deceptive intent, improperly set forth the inventorship.

The petition having met all of the requirements of 37 CFR 1.48(a) is granted.

The inventorship in the application has been changed by adding **Philippe Combette of Castelnau Le lez, France; Johann Courteaud of La Possession, France and Alain Giana of Le Cres, France** as joint inventor.

SUMMARY: THE PETITION IS GRANTED.

Hezron E. Williams,
Supervisory Patent Examiner
Patent Examining Technology Center 2800

Muncy, Geissler, Olds & Lowe, PLLC
P.O. BOX 1364
FAIRFAX, VA 22038-1364

UNITED STATES PATENT AND TRADEMARK OFFICE

UNITED STATES DEPARTMENT OF COMMERCE
United States Patent and Trademark Office
Address: COMMISSIONER FOR PATENTS
P.O. Box 1450
Alexandria, Virginia 22313-1450
www.uspto.gov

APPLICATION NO.	FILING DATE	FIRST NAMED INVENTOR	ATTORNEY DOCKET NO.	CONFIRMATION NO.
11/410,985	04/26/2006	Koichiro Akiyama	285430US2SRDDIV	5970

22850 7590 05/05/2008

OBLON, SPIVAK, MCCLELLAND MAIER & NEUSTADT, P.C.
1940 DUKE STREET
ALEXANDRIA, VA 22314

EXAMINER	
WORJLOH, JALATEE	
ART UNIT	PAPER NUMBER
3621	

NOTIFICATION DATE	DELIVERY MODE
05/05/2008	ELECTRONIC

Please find below and/or attached an Office communication concerning this application or proceeding.

The time period for reply, if any, is set in the attached communication.

Notice of the Office communication was sent electronically on above-indicated "Notification Date" to the following e-mail address(es):

patentdocket@oblon.com
oblonpat@oblon.com
jgardner@oblon.com

UNITED STATES PATENT AND TRADEMARK OFFICE

Commissioner for Patents
United States Patent and Trademark Office
P.O. Box 1450
Alexandria, VA 22313-1450
www.uspto.gov

FROM DIRECTORS OFFICE

MAY 02 2008

TECHNOLOGY CENTER 3600

OBLON, SPIVAK, MCCLELLAND
MAIER & NEUSTADT, P.C.
1940 Duke St
Alexandria, VA 22314

In re application of : **DECISION ON PETITION**
Koichiro Akiyama : **UNDER 37 C.F.R. §1.81**
Application No. 11/410,985
Filed: April 26, 2006
For: BROADCAST RECEIVING METHOD AND APPARATUS AND INFORMATION DISTRIBUTING METHOD AND APPARATUS

This is in response to the petition filed on January 16, 2008 under 37 C.F.R. §1.181 to compel consideration by the examiner of the reference cited on line AW of the Information Disclosure Statement (IDS) filed April 26, 2006.

The petition is **DISMISSED as MOOT**.

This application issued as U.S. Patent 7,363,276 on April 22, 2008. Prior to issuance and in the Interview Summary mailed January 23, 2008, the examiner indicated that the reference on line AW was considered. Because the reference in the IDS was considered by the examiner, the reference is listed on the face of the issued patent.

In light of the above, this petition is considered moot and is dismissed.

Any questions regarding this decision should be directed to SPE Andrew Fischer at (571) 272-6779.

Wynn Coggins
Director
Technology Center 3600
(571) 272-5350

Af/snm: 4/26/08

SM

UNITED STATES PATENT AND TRADEMARK OFFICE

UNITED STATES DEPARTMENT OF COMMERCE
United States Patent and Trademark Office
Address: COMMISSIONER FOR PATENTS
P.O. Box 1450
Alexandria, Virginia 22313-1450
www.uspto.gov

BIRCH STEWART KOLASCH & BIRCH
PO BOX 747
FALLS CHURCH, VA 22040-0747

Mail Date: 04/20/2010

Applicant	: Chun-Jung Chen	: DECISION ON REQUEST FOR
Patent Number	: 7641820	: RECALCULATION of PATENT
Issue Date	: 01/05/2010	: TERM ADJUSTMENT IN VIEW
Appliction No	: 11/410,988	: OF WYETH AND NOTICE OF INTENT TO
Filed	: 04/26/2006	: ISSUE CERTIFICATE OF CORRECTION
		:

The Request for Recalculation is **GRANTED** to the extent indicated.

The patent term adjustment has been determined to be **0** days. The USPTO will *sua sponte* issue a certificate of correction reflecting the amount of PTA days determined by the recalculation.

Prior to the issuance of the certificate of correction, the USPTO will afford patentee an opportunity to be heard and request reconsideration. Accordingly, patentee has **one month or thirty (30) days**, whichever is longer, to file a request for reconsideration of this patent term adjustment calculation. See 35 U.S.C. 154(b)(3)(B)(ii) and 37 CFR 1.322(a)(4). No extensions of time will be granted under 37 CFR 1.136.

Patentee should use document code PET.OP if electronically filing a request for reconsideration of this patent term adjustment calculation. The patentee must also include the information required by 37 CFR 1.705(b)(2) and the fee required by 37 CFR 1.18(e). If patentee does not file a timely request for reconsideration of this patent term adjustment calculation including the information required by 37 CFR 1.705(b)(2) and the fee required by 37 CFR 1.18(e), the USPTO will issue a certificate of correction reflecting the PTA determination noted above.

Patentee should be aware that in order to preserve the right to review in the United States District Court for the District of Columbia of the USPTO patent term adjustment determination, patentee must ensure that he or she also take the steps required under 35 U.S.C. 154(b)(4)(A) in a timely manner. Nothing in the request for recalculation should be construed as providing an alternative time frame for commencing a civil action under 35 U.S.C. 154(b)(4)(A).

Any questions concerning this decision should be directed to the Office of Patent Legal Administration at 571-272-7702.

UNITED STATES PATENT AND TRADEMARK OFFICE

Commissioner for Patents
United States Patent and Trademark Office
P.O. Box 1450
Alexandria, VA 22313-1450
www.uspto.gov

DANIEL P. MCCARTHY
PARSONS BEHLE & LATIMER
201 S. MAIN STREET, SUITE 1800
P.O. BOX 45898
SALT LAKE CITY, UT 84111

COPY MAILED

JUL 30 2007

OFFICE OF PETITIONS

In re Application of :
WANG, Tao :
Application No. 11/410,995 : DECISION ON PETITION
Filed: April 25, 2006 : TO WITHDRAW
Attorney Docket No. 5183.1 P : FROM RECORD
:

This is a decision on the Request to Withdraw as attorney or agent of record under 37 C.F.R. § 1.36(b), filed January 17, 2007 and re-submitted February 8, 2007.

The request is **NOT APPROVED.**

A grantable request to withdraw as attorney/agent of record must be signed by every attorney/agent seeking to withdraw or contain a clear indication that one attorney is signing on behalf of another/others. A request to withdraw will not be approved unless at least 30 (thirty) days would remain between the date of approval and the later of the expiration date of a time to file a response or the expiration date of the maximum time period which can be extended under 37 C.F.R. § 1.136(a).

The request cannot be approved because no reasons for withdrawal have been provided. The Office cannot, at this time, determine whether practitioner's request is one of the mandatory or permissive reasons enumerated in 37 CFR 10.40. Any subsequent requests must include reasons for withdrawal. Please note that there is a space provided for on PTO/SB/83 (Request to Withdraw as Attorney or Agent) to supply practitioner's reasons.

All future communications from the Office will continue to be directed to the above-listed address until otherwise notified by applicant.

Telephone inquiries concerning this decision should be directed to the undersigned at 571-272-7253.

Monica A.
Petitions Examiner
Office of Petitions

cc: CAO GROUP, INC.
4628 WEST SKYHAWK DRIVE
WEST VALLEY CITY, UT 84084

UNITED STATES PATENT AND TRADEMARK OFFICE

Commissioner for Patents
United States Patent and Trademark Office
P.O. Box 1450
Alexandria, VA 22313-1450
www.uspto.gov

COPY MAILED

AUG 25 2009

OFFICE OF PETITIONS

HARMAN - BRINKS HOFER CHICAGO
BRINKS HOFER GILSON & LIONE
P.O. BOX 10395
CHICAGO, IL 60610

In re Application of :
Markus Christoph, et al. :
Application No. 11/411,004 : DECISION ON PETITION
Filed: April 25, 2006 : TO WITHDRAW
Attorney Docket No. 11336/1308 (P05091US) : FROM RECORD
:

This is a decision on the Request to Withdraw as attorney or agent of record under 37 C.F.R. § 1.36(b), filed June 15, 2009.

The request is **DISMISSED** as moot.

A review of the file record indicates that the power of attorney to Harman - Brinks Hofer Chicago, Brinks, Hofer, Gilson & Lione has been revoked by the assignee of the patent application on August 18, 2009. Accordingly, the request to withdraw under 37 C.F.R. § 1.36(b) is moot.

All future communications from the Office will continue to be directed to the below-listed address until otherwise notified by applicant.

Telephone inquires concerning this decision should be directed to undersigned at 571-272-1642. All other inquiries concerning the examination or status of this application should be directed to the Technology Center.

/AMW/
April M. Wise
Petitions Examiner
Office of Petitions

cc: ROBERT P. HART, ESQ.
HARMAN INTERNATIONAL INDUSTRIES, INCORPORATED
8500 BALBOA BOULEVARD
NORTHRIDGE, CA 91329

UNITED STATES PATENT AND TRADEMARK OFFICE

UNITED STATES DEPARTMENT OF COMMERCE
United States Patent and Trademark Office
Address: COMMISSIONER FOR PATENTS
P.O. Box 1450
Alexandria, Virginia 22313-1450
www.uspto.gov

APPLICATION NUMBER	FILING OR 371(C) DATE	FIRST NAMED APPLICANT	ATTY. DOCKET NO./TITLE
11/411,004	04/25/2006	Markus Christoph	11336/1308 (P05091US)

CONFIRMATION NO. 4024

POWER OF ATTORNEY NOTICE

81166
HARMAN - BRINKS HOFER CHICAGO
Brinks Hofer Gilson & Lione
P.O. Box 10395
Chicago, IL 60610

Date Mailed: 08/24/2009

NOTICE REGARDING CHANGE OF POWER OF ATTORNEY

This is in response to the Power of Attorney filed 08/18/2009.

- The Power of Attorney to you in this application has been revoked by the assignee who has intervened as provided by 37 CFR 3.71. Future correspondence will be mailed to the new address of record(37 CFR 1.33).

/amwise/

Office of Data Management, Application Assistance Unit (571) 272-4000, or (571) 272-4200, or 1-888-786-0101

UNITED STATES PATENT AND TRADEMARK OFFICE

UNITED STATES DEPARTMENT OF COMMERCE
United States Patent and Trademark Office
Address: COMMISSIONER FOR PATENTS
P.O. Box 1450
Alexandria, Virginia 22313-1450
www.uspto.gov

HAYNES BEFFEL & WOLFELD LLP
P O BOX 366
HALF MOON BAY, CA 94019

Mail Date: 04/21/2010

Applicant	: Leonid Rozenboim	: DECISION ON REQUEST FOR
Patent Number	: 7620516	: RECALCULATION of PATENT
Issue Date	: 11/17/2009	: TERM ADJUSTMENT IN VIEW
Appliction No	: 11/411,005	: OF WYETH AND NOTICE OF INTENT TO
Filed	: 04/25/2006	: ISSUE CERTIFICATE OF CORRECTION
		:

The Request for Recalculation is **GRANTED** to the extent indicated.

The patent term adjustment has been determined to be **125** days. The USPTO will *sua sponte* issue a certificate of correction reflecting the amount of PTA days determined by the recalculation.

Prior to the issuance of the certificate of correction, the USPTO will afford patentee an opportunity to be heard and request reconsideration. Accordingly, patentee has **one month or thirty (30) days**, whichever is longer, to file a request for reconsideration of this patent term adjustment calculation. See 35 U.S.C. 154(b)(3)(B)(ii) and 37 CFR 1.322(a)(4). No extensions of time will be granted under 37 CFR 1.136.

Patentee should use document code PET.OP if electronically filing a request for reconsideration of this patent term adjustment calculation. The patentee must also include the information required by 37 CFR 1.705(b)(2) and the fee required by 37 CFR 1.18(e). If patentee does not file a timely request for reconsideration of this patent term adjustment calculation including the information required by 37 CFR 1.705(b)(2) and the fee required by 37 CFR 1.18(e), the USPTO will issue a certificate of correction reflecting the PTA determination noted above.

Patentee should be aware that in order to preserve the right to review in the United States District Court for the District of Columbia of the USPTO patent term adjustment determination, patentee must ensure that he or she also take the steps required under 35 U.S.C. 154(b)(4)(A) in a timely manner. Nothing in the request for recalculation should be construed as providing an alternative time frame for commencing a civil action under 35 U.S.C. 154(b)(4)(A).

Any questions concerning this decision should be directed to the Office of Patent Legal Administration at 571-272-7702.

PALM INTRANET

Day : Thursday
Date: 10/30/2008
Time: 13:25:21

Inventor Name Search Result Office of Public Affairs

Your Search was:

Last Name = OKUNO
First Name = MICHITAKA

Application#	Patent#	PG Pub#	Status	Date Filed	Title	Examiner Name	Inventor Name
12010703	Not Issued	0	030	01/29/2008	MULTI-PLANE CELL SWITCH FABRIC SYSTEM	PATEL,JAYANTI	OKUNO, MICHITAKA
11195702	Not Issued	20060098675	041	08/03/2005	TRAFFIC CONTROL METHOD FOR NETWORK EQUIPMENT	MORLAN,ROBERT	OKUNO, MICHITAKA
11211570	Not Issued	20060123136	041	08/26/2005	DATA TRANSFER DEVICE	SHIVERS,ASHLEY	OKUNO, MICHITAKA
11878279	Not Issued	20080159149	030	07/23/2007	PRIORITIZED BANDWIDTH MANAGEMENT METHOD FOR SWITCH	TROST IV,WILLIAM	OKUNO, MICHITAKA
11411023	Not Issued	20060253606	030	04/26/2006	PACKET TRANSFER APPARATUS	ZHAO,WEI	OKUNO, MICHITAKA
10210357	6910120	20040024996	150	07/31/2002	SPECULATIVE COUNTING OF PERFORMANCE EVENTS WITH REWIND COUNTER	KIM,KENNETH	OKUNO, MICHITAKA
10210358	7047398	20040024994	150	07/31/2002	ANALYZING INSTRUCTION	HUISMAN,DAVID	OKUNO, MICHITAKA

					COMPLETION DELAYS IN A PROCESSOR		
10210359	7051177	20040024982	150	07/31/2002	METHOD FOR MEASURING MEMORY LATENCY IN A HIERARCHICAL MEMORY SYSTEM	TRUONG,BAO	OKUNO, MICHITAKA
10210415	6970999	20040025146	150	07/31/2002	COUNTING LATENCIES OF AN INSTRUCTION TABLE FLUSH, REFILL AND INSTRUCTION EXECUTION USING A PLURALITY OF ASSIGNED COUNTERS	RIZZUTO,KEVIN	OKUNO, MICHITAKA
10956089	7440457	20050074005	150	10/04/2004	NETWORK-PROCESSOR ACCELERATOR	PARK,JUNG	OKUNO, MICHITAKA

Inventor Search Completed: No Records to Display.

Search Another: Inventor Last Name OKUNO First Name MICHITAKA Search

Enter both names for a faster result, even if it is only a few letters.

(To go back use Back button on your browser toolbar)

UNITED STATES PATENT AND TRADEMARK OFFICE

Commissioner for Patents
United States Patent and Trademark Office
P.O. Box 1450
Alexandria, VA 22313-1450
www.uspto.gov

DENNISON ASSOCIATES
SUITE 301
133 RICHMOND STREET WEST
TORONTO ON M5H 2L7 CA CANADA

COPY MAILED

JUL 12 2007

OFFICE OF PETITIONS

In re Application of :
John Rice :
Application No. 11/411,030 : ON PETITION
Filed: April 26, 2006 :
Attorney Docket No. JJ-12 587US :

This is a decision on the petition under 37 CFR 1.137(b), filed by January 26, 2007, to revive the above-identified application.

The petition is **GRANTED**.

The application became abandoned for failure to timely respond to a Notice to File Missing Parts mailed April 23, 2006. The notice set a two-month period to respond and required an oath or declaration under 37 CFR 1.63 and the requisite surcharge under 37 CFR 1.16(e). A Notice of Abandonment was mailed on January 25, 2007. In response, on January 26, 2007, the present petition was filed.

The petition satisfies the requirements of 37 CFR 1.137(b) in that petitioner has supplied (1) the reply in the form of an executed declaration and the $65 surcharge; (2) the petition fee of $750; and (3) an adequate statement of unintentional delay.

The application is being referred to the Office of Initial Patent Examination (OIPE) for further processing using the declaration filed January 26, 2007.

Telephone inquires related to this decision should be directed to the undersigned at (571) 272-3204. Telephone inquiries related to OIPE processing should be directed to their hotline at (571) 272-4000.

Sherry D. Brinkley
Petitions Examiner
Office of Petitions

UNITED STATES PATENT AND TRADEMARK OFFICE

Commissioner for Patents
United States Patent and Trademark Office
P.O. Box 1450
Alexandria, VA 22313-1450
www.uspto.gov

COPY MAILED

FEB 19 2008

OFFICE OF PETITIONS

BLANK ROME LLP
600 NEW HAMPSHIRE AVENUE NW
WASHINGTON DC 20037

In re Application of :
Jang-Keun Oh :
Application No. 11/411,035 : ON PETITION
Filed: April 26, 2006 :
Attorney Docket No. 116511.0208 :

This is a decision on the petition to withdraw the holding of abandonment under 37 CFR 1.181, filed January 24, 2008. The petition was mistakenly filed in application no. 11/411,034. The error was noticed by the Office, and the petition has been placed into the correct file.

The petition is **GRANTED**.

This application was held abandoned for failure to timely file a response to the non-final Office action mailed June 11, 2007. This Office action set an extendable period for reply of three (3) months. No reply having been received, the application became abandoned on September 12, 2007. A Notice of Abandonment was mailed on January 8, 2008.

Petitioner contends that he did timely file a reply. In support, petitioner has included a copy of a USPTO date stamped postcard receipt dated September 10, 2007, and itemizing an amendment.

A postcard receipt which itemizes and properly identifies the items which are being filed serves as *prima facie* evidence of receipt in the Office of all items listed thereon on the date stamped thereon by the Office. See MPEP 503.

In view thereof, **THE HOLDING OF ABANDONMENT IS WITHDRAWN.**

The matter is being forwarded to Group Art Unit 3723 for consideration of the amendment filed September 10, 2007 (copy supplied with the instant petition).

Telephone inquiries regarding this decision should be directed to the undersigned at (571)272-3207.

Cliff Congo
Petitions Attorney
Office of Petitions

UNITED STATES PATENT AND TRADEMARK OFFICE

UNITED STATES DEPARTMENT OF COMMERCE
United States Patent and Trademark Office
Address: COMMISSIONER FOR PATENTS
P.O. Box 1450
Alexandria, Virginia 22313-1450
www.uspto.gov

SEED INTELLECTUAL PROPERTY LAW GROUP PLLC
701 FIFTH AVE
SUITE 5400
SEATTLE, WA 98104

Mail Date: 04/21/2010

Applicant	: Andrew J. Berkley	: DECISION ON REQUEST FOR
Patent Number	: 7639035	: RECALCULATION of PATENT
Issue Date	: 12/29/2009	: TERM ADJUSTMENT IN VIEW
Appliction No	: 11/411,051	: OF WYETH AND NOTICE OF INTENT TO
Filed	: 04/25/2006	: ISSUE CERTIFICATE OF CORRECTION
		:

The Request for Recalculation is **GRANTED** to the extent indicated.

The patent term adjustment has been determined to be **918** days. The USPTO will *sua sponte* issue a certificate of correction reflecting the amount of PTA days determined by the recalculation.

Prior to the issuance of the certificate of correction, the USPTO will afford patentee an opportunity to be heard and request reconsideration. Accordingly, patentee has **one month or thirty (30) days**, whichever is longer, to file a request for reconsideration of this patent term adjustment calculation. See 35 U.S.C. 154(b)(3)(B)(ii) and 37 CFR 1.322(a)(4). No extensions of time will be granted under 37 CFR 1.136.

Patentee should use document code PET.OP if electronically filing a request for reconsideration of this patent term adjustment calculation. The patentee must also include the information required by 37 CFR 1.705(b)(2) and the fee required by 37 CFR 1.18(e). If patentee does not file a timely request for reconsideration of this patent term adjustment calculation including the information required by 37 CFR 1.705(b)(2) and the fee required by 37 CFR 1.18(e), the USPTO will issue a certificate of correction reflecting the PTA determination noted above.

Patentee should be aware that in order to preserve the right to review in the United States District Court for the District of Columbia of the USPTO patent term adjustment determination, patentee must ensure that he or she also take the steps required under 35 U.S.C. 154(b)(4)(A) in a timely manner. Nothing in the request for recalculation should be construed as providing an alternative time frame for commencing a civil action under 35 U.S.C. 154(b)(4)(A).

Any questions concerning this decision should be directed to the Office of Patent Legal Administration at 571-272-7702.

UNITED STATES PATENT AND TRADEMARK OFFICE

UNITED STATES DEPARTMENT OF COMMERCE
United States Patent and Trademark Office
Address: COMMISSIONER FOR PATENTS
P.O. Box 1450
Alexandria, Virginia 22313-1450
www.uspto.gov

CANTOR COLBURN, LLP
20 Church Street
22nd Floor
Hartford, CT 06103

Mail Date: 04/26/2010

Applicant	: Koji Suzuki	: DECISION ON REQUEST FOR
Patent Number	: 7572685	: RECALCULATION of PATENT
Issue Date	: 08/11/2009	: TERM ADJUSTMENT IN VIEW
Application No	: 11/411,058	: OF WYETH
Filed	: 04/25/2006	:
		:

The Patentee's Request for Recalculation is **DISMISSED.**

This Request is deemed ineligible for consideration for one or more of the following reasons:

(A). The patent for which PTA recalculation is requested is either a design or reissue application or is a reexamination proceeding;

(B). The patent for which PTA recalculation is requested resulted from a utility or plant application filed under 35 USC 111(a) before May 29, 2000 and no CPA filed in the application on/after May 29, 2000;

(C). The patent for which PTA recalculation is requested resulted from an international application in which the international filing date was before May 29, 2000 and no CPA filed in the application on/after May 29, 2000;

(D). The patent for which PTA recalculation is requested issued on/after March 2, 2010;

(E). The Request for Recalculation was filed more than 180 days after the grant date of the patent and the request was not filed within two months of a dismissal of a request for reconsideration of the of the patent term under 37 CFR 1.705(d);

(F). The Request for Recalculation is not solely limited to USPTO pre-Wyeth interpretation of 35 U.S.C. 154(b)(2)(A);

or

(G). A civil action was filed pursuant to 35 U.S.C. 154(b)(4)(A)concerning the same patent at issue in this request.

Patentee may file a reply to this decision dismissing the Request for Recalculation. Patentee must file such reply within one month or thirty days, whichever is longer, of the mail date of the decision dismissing the Request for Recalculation. No fee is required if patentee is asserting in the reply that the dismissal for ineligibility is improper.

Patentee should use document code PET.OP if electronically filing a reply to this dismissal. If the USPTO finds that the request was improperly deemed ineligible, the USPTO will mail applicant a recalculation determination.

Patentee should be aware that in order to preserve the right to review in the United States District Court for the District of Columbia of the USPTO patent term adjustment determination, patentee must ensure that he or she also take the steps required under 35 U.S.C. 154(b)(4)(A). Nothing in the request for recalculation should be construed as providing an alternative time frame for commencing a civil action under 35 U.S.C. 154 (b)(4)(A).

Any questions concerning this decision should be directed to the Office of Patent Legal Administration at 571-272-7702.

UNITED STATES PATENT AND TRADEMARK OFFICE

UNITED STATES DEPARTMENT OF COMMERCE
United States Patent and Trademark Office
Address: COMMISSIONER FOR PATENTS
P.O. Box 1450
Alexandria, Virginia 22313-1450
www.uspto.gov

CANTOR COLBURN, LLP
20 Church Street
22nd Floor
Hartford, CT 06103

Mail Date: 05/17/2010

Applicant : Koji Suzuki
Patent Number : 7572685
Issue Date : 08/11/2009
Application No: 11/411,058
Filed : 04/25/2006

: NOTICE CONCERNING IMPROPER
: DISMISSAL OF THE REQUEST
: FOR RECALCULATION OF
: PATENT TERM ADJUSTMENT
: IN VIEW OF WYETH

The United States Patent and Trademark Office (USPTO) discovered that in processing the recent recalculation decisions mailed in response to patentee's filed Request for Recalculation of Patent Term Adjustment in view of Wyeth, the USPTO mistakenly dismissed a small number of requests as ineligible. The dismissals involve requests that were filed on February 9-12, 2010, for patents that were granted on August 11, 2009. Any request that was filed on February 8, 2010 was properly deemed eligible for patent term adjustment (PTA) and was recalculated.

Patents meeting the above criteria were eligible because the USPTO was closed February 8-11, 2010, due to a snowstorm. See Closing of the United States Patent and Trademark Office from Monday February, 8, 2010, through Thursday, February 11, 2010, 1352 *Off. Gaz. Pat. Office* 146 (March 16, 2010). The Office considered each day from Monday, February 8, 2010, through Thursday, February 11, 2010, to be a "Federal holiday within the District of Columbia" under 35 U.S.C. § 21(b) and 37 CFR 1.6, 1.7, 1.9, 2.2(d), 2.195 and 2.196. Any actions that were due from Monday, February, 8, 2010, through Thursday, February 11, 2010, (or the preceding Saturday (February 6, 2010) or Sunday (February 7, 2010)) will be considered timely if the action was taken on the next succeeding business day on which the USPTO was open, which was February 12, 2010.

This notice **VACATES** the previous mailed decision in the patented file that deemed patentee ineligible for the request for recalculation. Patentee's request for recalculation is GRANTED.

The patent term adjustment has been determined to be **486** days. The USPTO will *sua sponte* issue a certificate of correction reflecting the amount of PTA days determined by the recalculation.

Prior to the issuance of the certificate of correction, the USPTO will afford patentee an opportunity to be heard and request reconsideration. Accordingly, patentee has **one month or thirty (30) days** from the mail date of this notice, whichever is longer, to file a request for reconsideration of this PTA calculation. See 35 U.S.C. § 154(b)(3)(B)(ii) and 37 CFR 1.322(a)(4).

Patentee should use document code PET.OP if electronically filing a request for reconsideration of this PTA calculation. The patentee must also include the information required by 37 CFR 1.705(b)(2) and the fee required by 37 CFR 1.18(e). If patentee does not file a timely request for reconsideration of this PTA calculation, including the information required by 37 CFR 1.705(b)(2) and the fee required by 37 1.18(e), the USPTO will issue a certificate of correction reflecting the PTA determination noted above.

Patentee should be aware that in order to preserve the right of review of the USPTO's PTA deterimation in the United States District Court for the District of Columbia, patentee must ensure that the steps required under 35 U.S.C. § 154(b)(4) are taken in a timely manner. Nothing in the request for recalculation should be construed as providing an alternative time frame for commencing a civil action under 35 U.S.C. § 154(b)(4).

SPE RESPONSE FOR CERTIFICATE OF CORRECTION

DATE : 01/14/09 Paper No.: _____

TO SPE OF : ART UNIT 3728

SUBJECT : Request for Certificate of Correction for Appl. No.: 11411069 Patent No.: 7311204 B2

Please respond to this request for a certificate of correction within 7 days.

FOR IFW FILES:

Please review the requested changes/corrections as shown in the **COCIN** document(s) in the IFW application image. No new matter should be introduced, nor should the scope or meaning of the claims be changed.

Please complete the response (see below) and forward the completed response to scanning using document code **COCX**.

FOR PAPER FILES:

Please review the requested changes/corrections as shown in the attached certificate of correction. Please complete this form (see below) and forward it with the file to:

Certificates of Correction Branch (CofC)
South Tower - 9A22
Palm Location 7580

[redacted]

Certificates of Correction Branch
703-308-9390 ext. _____

Thank You For Your Assistance

The request for issuing the above-identified correction(s) is hereby:
Note your decision on the appropriate box.

- ☑ **Approved** — All changes apply.
- ☐ **Approved in Part** — Specify below which changes **do not** apply.
- ☐ **Denied** — State the reasons for denial below.

Comments: Approved @ Examiner.

SPE 3728

PTOL-306 (REV. 7/03) U.S. DEPARTMENT OF COMMERCE Patent and Trademark Office

UNITED STATES PATENT AND TRADEMARK OFFICE

Commissioner for Patents
United States Patent and Trademark Office
P.O. Box 1450
Alexandria, VA 22313-1450
www.uspto.gov

NOVO NORDISK, INC.
INTELLECTUAL PROPERTY DEPARTMENT
100 COLLEGE ROAD WEST
PRINCETON NJ 08540

MAILED

MAY 06 2010

OFFICE OF PETITIONS

In re Application of	:	
Ole Christian Nielsen et al	:	
Application No. 11/411,081	:	DECISION GRANTING PETITION
Filed: April 25, 2006	:	UNDER 37 CFR 1.313(c)(2)
Attorney Docket No. 6700.204-US	:	

This is a decision on the petition under 37 CFR 1.313(c)(2), filed May 4, 2010, to withdraw the above-identified application from issue after payment of the issue fee.

The petition is **GRANTED**.

The above-identified application is withdrawn from issue for consideration of a submission under 37 CFR 1.114 (request for continued examination). *See* 37 CFR 1.313(c)(2).

Petitioner is advised that the issue fee paid on October 14, 2009 cannot be refunded. If, however, this application is again allowed, petitioner may request that it be applied towards the issue fee required by the new Notice of Allowance.[1]

Telephone inquiries should be directed to the undersigned at (571) 272-3208.

This application is being referred to Technology Center AU 3763 for processing of the request for continued examination under 37 CFR 1.114 and for consideration of the concurrently filed IDS.

/Karen Creasy/
Karen Creasy
Petitions Examiner
Office of Petitions

[1] *The request to apply the issue fee to the new Notice may be satisfied by completing and returning the new Part B – Fee(s) Transmittal Form (along with any balance due at the time of submission). Petitioner is advised that the Issue Fee Transmittal Form must be completed and timely submitted to avoid abandonment of the application.*

SPE RESPONSE FOR CERTIFICATE OF CORRECTION

Paper No.: _____

DATE : 2/2/09

TO SPE OF : ART UNIT 2834 Leung Quyen (Spe)

SUBJECT : Request for Certificate of Correction for Appl. No.: 11/411112 Patent No.: 7242123

Please respond to this request for a certificate of correction within 7 days.

FOR IFW FILES:

Please review the requested changes/corrections as shown in the **COCIN** document(s) in the IFW application image. No new matter should be introduced, nor should the scope or meaning of the claims be changed.

Please complete the response (see below) and forward the completed response to scanning using document code **COCX**.

FOR PAPER FILES:

Please review the requested changes/corrections as shown in the attached certificate of correction. Please complete this form (see below) and forward it with the file to:

Certificates of Correction Branch (CofC)
South Tower - 9A22
Palm Location 7580

[signature]
Certificates of Correction Branch
703-308-9390 ext. _____

Thank You For Your Assistance

The request for issuing the above-identified correction(s) is hereby:
Note your decision on the appropriate box.

- [x] **Approved** — **All** changes apply.
- [ ] **Approved in Part** — Specify below which changes **do not** apply.
- [ ] **Denied** — State the reasons for denial below.

Comments: _____

/Quyen Leung/ — **SPE**

2834 — **Art Unit**

UNITED STATES PATENT AND TRADEMARK OFFICE

UNITED STATES DEPARTMENT OF COMMERCE
United States Patent and Trademark Office
Address: COMMISSIONER FOR PATENTS
P.O. Box 1450
Alexandria, Virginia 22313-1450
www.uspto.gov

APPLICATION NO.	FILING DATE	FIRST NAMED INVENTOR	ATTORNEY DOCKET NO.	CONFIRMATION NO.
11/411,119	04/26/2006	Hiroshi Omi	285242US3	4986

7590 05/07/2008

OBLON, SPIVAK, MCCLELLAND MAIER & NEUSTADT, P.C.
1940 DUKE STREET
ALEXANDRIA, VA 22314

EXAMINER	
ARMAND, MARC ANTHONY	

ART UNIT	PAPER NUMBER
2814	

NOTIFICATION DATE	DELIVERY MODE
05/07/2008	ELECTRONIC

DECISION GRANTING PETITION UNDER 37 CFR 1.138(d)

The declaration of express abandonment is recognized

This is in response to the petition under 37 CFR 1.138(d), requesting for a refund of any previously paid search fee and excess claims fee in the above-identified application.

The petition is granted.

The express abandonment is recognized. Any previously paid search fee and excess claims fee are hereby refunded.

Telephone inquiries should be directed to the Office of Data Management at (571) 272-4200.

Patent Publication Branch
Office of Data Management

Refund Ref:
05/12/2008 0030055362

Credit Card Refund Total: $500.00

Am Exp..: XXXXXXXXXXX1007

Adjustment date: 05/12/2008 NFARMER
04/28/2006 EHAILE1 00000039 11411119
02 FC:1111 -500.00 OP

UNITED STATES PATENT AND TRADEMARK OFFICE

Commissioner for Patents
United States Patent and Trademark Office
P.O. Box 1450
Alexandria, VA 22313-1450
www.uspto.gov

MAILED

OCT 21 2009

OFFICE OF PETITIONS

Davidson Berquist Jackson & Gowdey, LLP
4300 Wilson Boulevard, 7th Floor
Arlington, VA 22203

In re Application of
Jonathan Gorrell et al.
Application No. 11/411,120
Filed: April 26, 2006
Attorney Docket No. 2549-0079

DECISION ON PETITION

This is a decision on the petition under the unintentional provisions of 37 CFR 1.137(b), filed September 22, 2009, to revive the above-identified application.

The petition is **GRANTED**.

The application became abandoned for failure to reply in a timely manner to the non-final Office action mailed March 19, 2009, which set a shortened statutory period for reply of three (3) months. No extensions of time under the provisions of 37 CFR 1.136(a) were obtained. Accordingly, the application became abandoned on June 20, 2009.

The petition satisfies the requirements of 37 CFR 1.137(b) in that petitioner has supplied (1) the reply in the form of an amendment after non-final, (2) the petition fee of $810, and (3) a proper statement of unintentional delay. Accordingly, the amendment is accepted as being unintentionally delayed.

An extension of time under 37 CFR 1.136 must be filed prior to the expiration of the maximum extendable period for reply. *See* In re Application of S., 8 USPQ2d 1630, 1631 (Comm'r Pats. 1988). Since the $555 extension of time fee submitted with the petition on September 22, 2009 was subsequent to the maximum extendable period for reply, this fee is unnecessary and will be credited to petitioner's deposit account.

Telephone inquiries concerning this decision should be directed to Kimberly Inabinet at (571) 272-4618.

This application is being referred to Technology Center AU 2613 for appropriate action by the Examiner in the normal course of business on the reply received September 22, 2009.

Carl Friedman
Petitions Examiner
Office of Petitions

UNITED STATES PATENT AND TRADEMARK OFFICE

UNITED STATES DEPARTMENT OF COMMERCE
United States Patent and Trademark Office
Address: COMMISSIONER FOR PATENTS
P.O. Box 1450
Alexandria, Virginia 22313-1450
www.uspto.gov

MORRISON & FOERSTER LLP
1650 TYSONS BOULEVARD
SUITE 400
MCLEAN, VA 22102

Mail Date: 04/21/2010

Applicant	: Satoshi Nakamura	: DECISION ON REQUEST FOR
Patent Number	: 7609299	: RECALCULATION of PATENT
Issue Date	: 10/27/2009	: TERM ADJUSTMENT IN VIEW
Appliction No	: 11/411,138	: OF WYETH AND NOTICE OF INTENT TO
Filed	: 04/26/2006	: ISSUE CERTIFICATE OF CORRECTION
		:

The Request for Recalculation is **GRANTED** to the extent indicated.

The patent term adjustment has been determined to be **629** days. The USPTO will *sua sponte* issue a certificate of correction reflecting the amount of PTA days determined by the recalculation.

Prior to the issuance of the certificate of correction, the USPTO will afford patentee an opportunity to be heard and request reconsideration. Accordingly, patentee has **one month or thirty (30) days**, whichever is longer, to file a request for reconsideration of this patent term adjustment calculation. See 35 U.S.C. 154(b)(3)(B)(ii) and 37 CFR 1.322(a)(4). No extensions of time will be granted under 37 CFR 1.136.

Patentee should use document code PET.OP if electronically filing a request for reconsideration of this patent term adjustment calculation. The patentee must also include the information required by 37 CFR 1.705(b)(2) and the fee required by 37 CFR 1.18(e). If patentee does not file a timely request for reconsideration of this patent term adjustment calculation including the information required by 37 CFR 1.705(b)(2) and the fee required by 37 CFR 1.18(e), the USPTO will issue a certificate of correction reflecting the PTA determination noted above.

Patentee should be aware that in order to preserve the right to review in the United States District Court for the District of Columbia of the USPTO patent term adjustment determination, patentee must ensure that he or she also take the steps required under 35 U.S.C. 154(b)(4)(A) in a timely manner. Nothing in the request for recalculation should be construed as providing an alternative time frame for commencing a civil action under 35 U.S.C. 154(b)(4)(A).

Any questions concerning this decision should be directed to the Office of Patent Legal Administration at 571-272-7702.

UNITED STATES PATENT AND TRADEMARK OFFICE

Commissioner for Patents
United States Patent and Trademark Office
P.O. Box 1450
Alexandria, VA 22313-1450
www.uspto.gov

DANIEL P. MCCARTHY
PARSONS, BEHLE & LATIMER
201 SOUTH MAIN STREET, SUITE 1800
P.O. BOX 45898
SALT LAKE CITY, UT 84111

COPY MAILED

JUN 25 2007

OFFICE OF PETITIONS

In re Application of :
Tao Wang :
Application No. 11/411,191 : DECISION ON PETITION
Filed: April 25, 2006 : TO WITHDRAW
Attorney Docket No. 5184.1 P : FROM RECORD
:

This is a decision on the Request to Withdraw as attorney or agent of record under 37 C.F.R. § 1.36(b), filed January 17, 2007 and February 8, 2007.

The request is **NOT APPROVED**.

A grantable request to withdraw as attorney/agent of record must be signed by every attorney/agent seeking to withdraw or contain a clear indication that one attorney is signing on behalf of another/others. A request to withdraw will not be approved unless at least 30 (thirty) days would remain between the date of approval and the later of the expiration date of a time to file a response or the expiration date of the maximum time period which can be extended under 37 C.F.R. § 1.136(a).

The request cannot be approved because no reasons for withdrawal have been provided. The Office cannot, at this time, determine whether practitioner's request is one of the mandatory or permissive reasons enumerated in 37 CFR 10.40. Any subsequent requests must include reasons for withdrawal. Please note that there is a space provided for on PTO/SB/83 (Request to Withdraw as Attorney or Agent) to supply practitioner's reasons.

All future communications from the Office will continue to be directed to the above-listed address until otherwise notified by applicant.

Telephone inquiries concerning this decision should be directed to undersigned at 571-272-1642.

April M. Wise
Petitions Examiner
Office of Petitions

cc: CAO GROUP, INC.
4628 WEST SKYHAWK DRIVE
WEST VALLEY CITY, UT 84084

UNITED STATES PATENT AND TRADEMARK OFFICE

Commissioner for Patents
United States Patent and Trademark Office
P.O. Box 1450
Alexandria, VA 22313-1450
www.uspto.gov

DANIEL P. MCCARTHY
PARSONS BEHLE & LATIMER
201 SOUTH MAIN STREET, SUITE 1800
P.O. BOX 45898
SALT LAKE CITY, UT 84111

COPY MAILED

JUL 0 3 2007

OFFICE OF PETITIONS

In re Application of :
CAO, Densen :
Application No. 11/411,194 : DECISION ON PETITION
Filed: April 25, 2006 : TO WITHDRAW
Attorney Docket No. **5185.1 P** : FROM RECORD
:

This is a decision on the Request to Withdraw as attorney or agent of record under 37 C.F.R. § 1.36(b), filed January 17, 2007 and re-submitted February 8, 2007.

The request is **NOT APPROVED**.

A grantable request to withdraw as attorney/agent of record must be signed by every attorney/agent seeking to withdraw or contain a clear indication that one attorney is signing on behalf of another/others. A request to withdraw will not be approved unless at least 30 (thirty) days would remain between the date of approval and the later of the expiration date of a time to file a response or the expiration date of the maximum time period which can be extended under 37 C.F.R. § 1.136(a).

The request cannot be approved because no reasons for withdrawal have been provided. The Office cannot, at this time, determine whether practitioner's request is one of the mandatory or permissive reasons enumerated in 37 CFR 10.40. Any subsequent requests must include reasons for withdrawal. Please note that there is a space provided for on PTO/SB/83 (Request to Withdraw as Attorney or Agent) to supply practitioner's reasons.

All future communications from the Office will continue to be directed to the above-listed address until otherwise notified by applicant.

Telephone inquiries concerning this decision should be directed to the undersigned at 571-272- 7253.

Monica A. Graves
Petitions Examiner
Office of Petitions

cc: **CAO GROUP INC.**
4628 WEST SKYHAWK DRIVE
WEST VALLEY CITY, UT 84084

UNITED STATES PATENT AND TRADEMARK OFFICE

UNITED STATES DEPARTMENT OF COMMERCE
United States Patent and Trademark Office
Address: COMMISSIONER FOR PATENTS
P.O. Box 1450
Alexandria, Virginia 22313-1450
www.uspto.gov

SEARETE LLC
CLARENCE T. TEGREENE
1756 - 114TH AVE., S.E.
SUITE 110
BELLEVUE, WA 98004

Mail Date: 04/21/2010

Applicant	: Roderick A. Hyde	: DECISION ON REQUEST FOR
Patent Number	: 7638090	: RECALCULATION of PATENT
Issue Date	: 12/29/2009	: TERM ADJUSTMENT IN VIEW
Appliction No	: 11/411,207	: OF WYETH AND NOTICE OF INTENT TO
Filed	: 04/25/2006	: ISSUE CERTIFICATE OF CORRECTION
		:

The Request for Recalculation is **GRANTED** to the extent indicated.

The patent term adjustment has been determined to be **628** days. The USPTO will *sua sponte* issue a certificate of correction reflecting the amount of PTA days determined by the recalculation.

Prior to the issuance of the certificate of correction, the USPTO will afford patentee an opportunity to be heard and request reconsideration. Accordingly, patentee has **one month or thirty (30) days**, whichever is longer, to file a request for reconsideration of this patent term adjustment calculation. See 35 U.S.C. 154(b)(3)(B)(ii) and 37 CFR 1.322(a)(4). No extensions of time will be granted under 37 CFR 1.136.

Patentee should use document code PET.OP if electronically filing a request for reconsideration of this patent term adjustment calculation. The patentee must also include the information required by 37 CFR 1.705(b)(2) and the fee required by 37 CFR 1.18(e). If patentee does not file a timely request for reconsideration of this patent term adjustment calculation including the information required by 37 CFR 1.705(b)(2) and the fee required by 37 CFR 1.18(e), the USPTO will issue a certificate of correction reflecting the PTA determination noted above.

Patentee should be aware that in order to preserve the right to review in the United States District Court for the District of Columbia of the USPTO patent term adjustment determination, patentee must ensure that he or she also take the steps required under 35 U.S.C. 154(b)(4)(A) in a timely manner. Nothing in the request for recalculation should be construed as providing an alternative time frame for commencing a civil action under 35 U.S.C. 154(b)(4)(A).

Any questions concerning this decision should be directed to the Office of Patent Legal Administration at 571-272-7702.

UNITED STATES PATENT AND TRADEMARK OFFICE

UNITED STATES DEPARTMENT OF COMMERCE
United States Patent and Trademark Office
Address: COMMISSIONER FOR PATENTS
P.O. Box 1450
Alexandria, Virginia 22313-1450
www.uspto.gov

SEARETE LLC
CLARENCE T. TEGREENE
1756 - 114TH AVE., S.E.
SUITE 110
BELLEVUE, WA 98004

Mail Date: 05/18/2010

Applicant : Roderick A. Hyde
Patent Number : 7638090
Issue Date : 12/29/2009
Application No: 11/411,207
Filed : 04/25/2006

: NOTICE CONCERNING IMPROPER
: CALCULATION OF PATENT TERM
: ADJUSTMENT BASED UPON USPTO
: IMPROPERLY MEASURING REDUCTION
: PERIOD UNDER 37 CFR 1.704(c)(10).

The United States Patent and Trademark Office (USPTO) discovered that in processing the recent recalculation decisions mailed in response to patentee's filed Request for Recalculation of Patent Term Adjustment in view of Wyeth, the USPTO improperly measured the reduction period for reductions under 37 CFR 1.704(c)(10). Pursuant to 37 CFR 1.704(c)(10), patentee's reduction begins on the date of filing the amendment under 37 CFR 1.312 ("1.312 amendment") or other related paper and ends on the date that the Office mails a response to the filing of the 1.312 amendment or other paper. It has been discovered that during the recalculation, the calculation failed to the limit the reduction to the mail date of the response to the 1.312 amendment or other paper. Accordingly, patentee's reductions were greater than warranted.

This notice **VACATES** the previous GRANTED request for recalculation and provides patentee with a revised GRANTED recalculation.

The patent term adjustment has been determined to be **674** days. The USPTO will *sua sponte* issue a certificate of correction reflecting the amount of patent term adjustment (PTA) days determined by the recalculation.

Prior to the issuance of the certificate of correction, the USPTO will afford patentee an opportunity to be heard and request reconsideration. Accordingly, patentee has **one month or thirty (30) days** from the mail date of this notice, whichever is longer, to file a request for reconsideration of this PTA calculation. See 35 U.S.C. § 154(b)(3)(B)(ii) and 37 CFR 1.322(a)(4).

Patentee should use document code PET.OP if electronically filing a request for reconsideration of this PTA calculation. The patentee must also include the information required by 37 CFR 1.705(b)(2), and the fee required by 37 CFR 1.18(e). If patentee does not file a timely request for reconsideration of this PTA calculation, including the information required by 37 CFR 1.705(b)(2) and the fee required by 37 CFR 1.18(e), the USPTO will issue a certificate of correction reflecting the PTA determination noted above.

Patentee should be aware that in order to preserve the right of review of the USPTO's PTA determination in the United States District Court for the District of Columbia, patentee must ensure that the steps required under 35 U.S.C. § 154 (b)(4) are taken in a timely manner. Nothing in the request for recalculation should be construed as providing an alternative time frame for commencing a civil action under 35 U.S.C. § 154(b)(4).

UNITED STATES PATENT AND TRADEMARK OFFICE

Commissioner for Patents
United States Patent and Trademark Office
P.O. Box 1450
Alexandria, VA 22313-1450
www.uspto.gov

In re Application of
Charles Delaney

Application No. 11411213

Filed: April 24,2006

Attorney Docket No. ITI-452 (86080.016301)

:DECISION ON PETITION TO MAKE SPECIAL
:UNDER 37 CFR 1.102(c)(1)

This is a decision on the electronic petition under 37 CFR 1.102 (c)(1) ,filed 24-JUL-2008 to make the above-identified application special based on applicant's age as set forth in MPEP § 708.02, Section IV.

The petition is **GRANTED**.

A grantable petition to make an application special under 37 CFR 1.102(c)(1), MPEP § 708.02, Section IV: Applicant's Age must include a statement by applicant or a registered practitioner having evidence that applicant is at least 65 years of age. No fee is required.

Accordingly, the above-identified application has been accorded “special” status and will be taken up for action by the examiner upon the completion of all pre-examination processing.

Telephone inquires concerning this electronic decision should be directed to the Electronic Business Center at 866-217-9197.

All other inquires concerning either the examination or status of the application should be directed to the Technology Center.

UNITED STATES PATENT AND TRADEMARK OFFICE

Commissioner for Patents
United States Patent and Trademark Office
P.O. Box 1450
Alexandria, VA 22313-1450
www.uspto.gov

HARNESS, DICKEY & PIERCE, PLC
P.O. BOX 828
BLOOMFIELD HILLS, MI 48303

MAILED

FEB 12 2009

OFFICE OF PETITIONS

In re Application of :
Max L. Eidswick :
Application No. 11/411,216 : DECISION ON PETITION
Filed: April 25, 2006 : TO WITHDRAW
Attorney Docket No. 8996-000001 : FROM RECORD
:

This is a decision on the Request to Withdraw as attorney or agent of record under 37 C.F.R. § 1.36(b), filed December 22, 2008.

The request is **APPROVED**.

A grantable request to withdraw as attorney/agent of record must be signed by every attorney/agent seeking to withdraw or contain a clear indication that one attorney is signing on behalf of another/others.

The request was signed by G. George Schivley on behalf of all attorneys of record who are associated with customer No. 27572. All attorneys/agents associated with the Customer Number 27572 have been withdrawn. Applicant is reminded that there is no attorney of record at this time.

The correspondence address of record has been changed and the new correspondence address is the address indicated below.

There is an outstanding Office action mailed December 11, 2008 that requires a reply from the applicant.

Telephone inquiries concerning this decision should be directed to undersigned at 571-272-1642.

/AMW/
April M. Wise
Petitions Examiner
Office of Petitions

cc: MAX E. EIDSWICK
1717 LINDEN LAKE ROAD
FORT COLLINS, CO 80524

UNITED STATES PATENT AND TRADEMARK OFFICE

UNITED STATES DEPARTMENT OF COMMERCE
United States Patent and Trademark Office
Address: COMMISSIONER FOR PATENTS
P.O. Box 1450
Alexandria, Virginia 22313-1450
www.uspto.gov

APPLICATION NUMBER	FILING OR 371(C) DATE	FIRST NAMED APPLICANT	ATTY. DOCKET NO./TITLE
11/411,216	04/25/2006	Max L. Eidswick	8996-000001

CONFIRMATION NO. 4191

POWER OF ATTORNEY NOTICE

27572
HARNESS, DICKEY & PIERCE, P.L.C.
P.O. BOX 828
BLOOMFIELD HILLS, MI 48303

OC000000034473773

Date Mailed: 02/10/2009

NOTICE REGARDING CHANGE OF POWER OF ATTORNEY

This is in response to the Power of Attorney filed 12/22/2008.

- The withdrawal as attorney in this application has been accepted. Future correspondence will be mailed to the new address of record. 37 CFR 1.33.

/amwise/

Office of Data Management, Application Assistance Unit (571) 272-4000, or (571) 272-4200, or 1-888-786-0101

UNITED STATES PATENT AND TRADEMARK OFFICE

Commissioner for Patents
United States Patent and Trademark Office
P.O. Box 1450
Alexandria, VA 22313-1450
www.uspto.gov

GLOBAL IP COUNSELORS, LLP
1233 20TH STREET, NW, SUITE 700
WASHINGTON, DC 20036-2680

COPY MAILED

JUN 05 2008

In re Application of :
Hideki Yamaguchi et al :
Application No. 11/411,225 : ON PETITION
Filed: April 26, 2006 :
Attorney Docket No. SD-US065079

This is a decision on the petition, filed June 4, 2008 under 37 CFR 1.313(c)(2) to withdraw the above-identified application from issue after payment of the issue fee.

The petition is **GRANTED**.

The above-identified application is withdrawn from issue for consideration of a submission under 37 CFR 1.114 (request for continued examination). See 37 CFR 1.313(c)(2).

Petitioner is advised that the issue fee paid on May 8, 2008 in the above-identified application cannot be refunded. If, however, the above-identified application is again allowed, petitioner may request that it be applied towards the issue fee required by the new Notice of Allowance.[1]

Telephone inquiries should be directed to Irvin Dingle at (571) 272-3210.

This matter is being referred to Technology Center AU 2111 for processing of the request for continued examination under 37 CFR 1.114 and for consideration of the concurrently filed Information Disclosure Statement.

Irvin Dingle
Petitions Examiner
Office of Petitions

[1] The request to apply the issue fee to the new Notice may be satisfied by completing and returning the new Issue Fee Transmittal Form PTOL-85(b), which includes the following language thereon: Commissioner for Patents is requested to apply the Issue Fee and Publication Fee (if any) or re-apply any previously paid issue fee to the application identified above. Petitioner is advised that, whether a fee is indicated as being due or not, the Issue Fee Transmittal Form **must** be completed and timely submitted to avoid abandonment. Note the language in bold text on the first page of the Notice of Allowance and Fee(s) Due (PTOL-85).

UNITED STATES PATENT AND TRADEMARK OFFICE

UNITED STATES DEPARTMENT OF COMMERCE
United States Patent and Trademark Office
Address: COMMISSIONER FOR PATENTS
P.O. Box 1450
Alexandria, Virginia 22313-1450
www.uspto.gov

LEE & MORSE, P.C.
3141 FAIRVIEW PARK DRIVE
SUITE 500
FALLS CHURCH, VA 22042

Mail Date: 04/21/2010

Applicant	: Teak Hyen Kwon	: DECISION ON REQUEST FOR
Patent Number	: 7655353	: RECALCULATION of PATENT
Issue Date	: 02/02/2010	: TERM ADJUSTMENT IN VIEW
Appliction No	: 11/411,227	: OF WYETH AND NOTICE OF INTENT TO
Filed	: 04/26/2006	: ISSUE CERTIFICATE OF CORRECTION
		:

The Request for Recalculation is **GRANTED** to the extent indicated.

The patent term adjustment has been determined to be **905** days. The USPTO will *sua sponte* issue a certificate of correction reflecting the amount of PTA days determined by the recalculation.

Prior to the issuance of the certificate of correction, the USPTO will afford patentee an opportunity to be heard and request reconsideration. Accordingly, patentee has **one month or thirty (30) days**, whichever is longer, to file a request for reconsideration of this patent term adjustment calculation. See 35 U.S.C. 154(b)(3)(B)(ii) and 37 CFR 1.322(a)(4). No extensions of time will be granted under 37 CFR 1.136.

Patentee should use document code PET.OP if electronically filing a request for reconsideration of this patent term adjustment calculation. The patentee must also include the information required by 37 CFR 1.705(b)(2) and the fee required by 37 CFR 1.18(e). If patentee does not file a timely request for reconsideration of this patent term adjustment calculation including the information required by 37 CFR 1.705(b)(2) and the fee required by 37 CFR 1.18(e), the USPTO will issue a certificate of correction reflecting the PTA determination noted above.

Patentee should be aware that in order to preserve the right to review in the United States District Court for the District of Columbia of the USPTO patent term adjustment determination, patentee must ensure that he or she also take the steps required under 35 U.S.C. 154(b)(4)(A) in a timely manner. Nothing in the request for recalculation should be construed as providing an alternative time frame for commencing a civil action under 35 U.S.C. 154(b)(4)(A).

Any questions concerning this decision should be directed to the Office of Patent Legal Administration at 571-272-7702.

UNITED STATES PATENT AND TRADEMARK OFFICE

UNITED STATES DEPARTMENT OF COMMERCE
United States Patent and Trademark Office
Address: COMMISSIONER FOR PATENTS
P.O. Box 1450
Alexandria, Virginia 22313-1450
www.uspto.gov

CARGILL, INCORPORATED
P.O. BOX 5624
MINNEAPOLIS, MN 55440-5624

Mail Date: 04/21/2010

Applicant	: Brian J. Brazeau	: DECISION ON REQUEST FOR
Patent Number	: 7582455	: RECALCULATION of PATENT
Issue Date	: 09/01/2009	: TERM ADJUSTMENT IN VIEW
Appliction No	: 11/411,229	: OF WYETH AND NOTICE OF INTENT TO
Filed	: 04/26/2006	: ISSUE CERTIFICATE OF CORRECTION
		:

The Request for Recalculation is **GRANTED** to the extent indicated.

The patent term adjustment has been determined to be **319** days. The USPTO will *sua sponte* issue a certificate of correction reflecting the amount of PTA days determined by the recalculation.

Prior to the issuance of the certificate of correction, the USPTO will afford patentee an opportunity to be heard and request reconsideration. Accordingly, patentee has **one month or thirty (30) days**, whichever is longer, to file a request for reconsideration of this patent term adjustment calculation. See 35 U.S.C. 154(b)(3)(B)(ii) and 37 CFR 1.322(a)(4). No extensions of time will be granted under 37 CFR 1.136.

Patentee should use document code PET.OP if electronically filing a request for reconsideration of this patent term adjustment calculation. The patentee must also include the information required by 37 CFR 1.705(b)(2) and the fee required by 37 CFR 1.18(e). If patentee does not file a timely request for reconsideration of this patent term adjustment calculation including the information required by 37 CFR 1.705(b)(2) and the fee required by 37 CFR 1.18(e), the USPTO will issue a certificate of correction reflecting the PTA determination noted above.

Patentee should be aware that in order to preserve the right to review in the United States District Court for the District of Columbia of the USPTO patent term adjustment determination, patentee must ensure that he or she also take the steps required under 35 U.S.C. 154(b)(4)(A) in a timely manner. Nothing in the request for recalculation should be construed as providing an alternative time frame for commencing a civil action under 35 U.S.C. 154(b)(4)(A).

Any questions concerning this decision should be directed to the Office of Patent Legal Administration at 571-272-7702.

UNITED STATES PATENT AND TRADEMARK OFFICE

Commissioner for Patents
United States Patent and Trademark Office
P.O. Box 1450
Alexandria, VA 22313-1450
www.uspto.gov

Jones Day
51 Louisiana Avenue, NW
Washington, DC 20001-2113

COPY MAILED

OCT 16 2006

OFFICE OF PETITIONS

In re Application of :
Robert J. D'Amato :
Application No. 11/411,230 : DECISION ON PETITION
Filed: April 26, 2006 :
Atty. Docket No. 9516-476-999 :

This is in response to the petition under 37 CFR 1.182, filed July 21, 2006, requesting that the Office accord the above-identified application a filing date of April 26, 2006, with Figures 6, 7 and 8 as part of the original disclosure.

On April 26, 2006, applicant filed the above-identified application. On May 25, 2006, the Office of Initial Patent Examination mailed a Notice to File Missing Parts of Nonprovisional Application ("Notice of Missing Parts"), stating that the application had been accorded a filing date of April 26, 2006, and advising applicant that Figures 6, 7 and 8 described in the specification appeared to have been omitted. Additionally, the Notice required applicants to submit $300.00 to complete the basic filing fee for a non-small entity.

On July 21, 2006, applicant submitted the present communication and two sheets of drawings (Figures 6, 7 and 8). Applicant asserted that this application is a continuation of Application No. 09/287,377, filed April 7, 1999, which was specifically incorporated by reference. Applicant request that the Office accept Figures 6, 7 and 8 and accord them a filing date of April 26, 2006, because the figures were included Application No. 09/287,377, and were inadvertently omitted on April 26, 2006.

Pursuant to MPEP 201.06(c)(IV):

> An applicant may incorporate by reference the prior application by including, in the continuation or divisional application-as-filed, an explicit statement

> that such specifically enumerated prior application or applications are 'hereby incorporated by reference.' This statement must appear in the specification. See 37 CFR 1.57(b) and MPEP § 608.01(p). The inclusion of this incorporation by reference statement will permit an applicant to amend the continuation or divisional application to include subject matter from the prior application(s), **without the need for a petition** provided the continuation or divisional application is entitled to a filing date notwithstanding the incorporation by reference.

(Emphasis added).

A review of the record indicates that the above-identified application as originally filed on April 26, 2006, included preliminary amendment amending the specification to include, *inter alia*, an explicit incorporation by reference of Application No. 09/287,377. Therefore, applicant can file an amendment with the examiner prior to the first action on the merits to include Figures 6, 7 and 8, **without the need for a petition**.

As applicant did not submit Figures 6, 7 and 8 upon filing this application, the Office correctly mailed the Notice of Missing Parts. For this reason, this application cannot be accorded the filing date of April 26, 2006, with Figures 6, 7 and 8 as a part of the original disclosure. Accordingly, the petition is **dismissed**.

The petition fee will not be refunded because the filing of the petition was not necessitated by any error on the part of the USPTO.

This matter is being referred to the Office of Initial Patent Examination to process the application with a filing date of April 26, 2006, using only the drawing sheets filed on that date. Figures 6, 7 and 8 submitted on July 21, 2006, will **not** be entered at this time.

Telephone inquiries regarding this decision should be directed to the undersigned at (571) 272-3211.

C. T. Donnell

Christina Tartera Donnell
Senior Petitions Attorney
Office of Petitions

UNITED STATES PATENT
AND TRADEMARK OFFICE

Commissioner for Patents
United States Patent and Trademark Office
P.O. Box 1450
Alexandria, VA 22313-1450
www.uspto.g

Date Mailed: November 13, 2008
Patent No. :7,435,745 B2
Ser. No. :11/411230
Inventor(s) :Robert J .D'Amato
Title :METHODS AND COMPOSITIONS FOR INHIBITION OF ANGIOGENESIS

Request for Certificate of Correction

Consideration has been given your request for the issuance of a certificate of correction for the above-identified patent under the provisions of Rule(s) 1.322 and/or 1.323.

Assignees' names and addresses (assignment data) printed in a patent, are based *solely* on information supplied in the appropriate space for identifying the assignment data, i.e., item 3 of the Issue Fee Transmittal Form PTOL-85B. Granting of a request under 37 CFR 3.81(b) is required to correct applicant's error providing ***incorrect or erroneous*** assignment data, *before* issuance of a Certificate of Correction, under 37 CFR 1.323 *(see Manual of Patent Examining Procedures (M.P.E.P) Chp.1400, sect. 1481).* This procedure is required *at any time after the issue fee is paid*, including after issuance of the patent.

In view of the foregoing, your request is hereby denied.

A request to correct the Assignee under 37 CFR 3.81(b) should include:

A. **the processing fee set forth in 37 CFR 1.117(h) (currently $130);**
B. a statement that the failure to include the correct assignee name on the PTOL-85B was inadvertent; and
C. a copy of the Notice of Recordation of Assignment Document, reflecting the reel and frame number where the assignment(s) is recorded and/or reflecting proof of *the date* the assignment was submitted for recordation.

In the Request, Applicant(s) may request that the file be forwarded to Certificates of Correction Branch, for issuance of a Certificate of Correction, if the Request is granted.

Any request under 37 CFR 3.81(b) should be directed to the following address or facsimile number:

By mail:
Mail Stop PETITIONS
Commissioner for Patents
Post Office Box 1450
Alexandria, VA 22313-1450

By hand: Customer Service Window
Mail Stop Petitions
Randolph Building
401 Dulany Street
Alexandria, VA 22314

By fax: (571) 273-0025
ATTN: Office of Petitions

If a fee (currently $100) was previously submitted for consideration of a Request for Certificate of Correction, under CFR 1.323, to correct assignment data, no additional fee is required.

Magdalene Talley
For Mary F. Diggs, Supervisor
Decisions & Certificates
of Correction Branch
(703) 308-9390 ext. 116

Jones Day
222 East 41st Street
New York, NY 10017

MD/mt

UNITED STATES PATENT AND TRADEMARK OFFICE

Commissioner for Patents
United States Patent and Trademark Office
P.O. Box 1450
Alexandria, VA 22313-1450
www.uspto.gov

JONES DAY
222 East 41st Street
New York NY 10017-6702

COPY MAILED

MAR 0 6 2009

OFFICE OF PETITIONS

In re Patent No. 7,435,745 :
Issue Date: October 14, 2008 :
Application No. 11/411,230 : ON PETITION
Filed: April 26, 2006 :
Attorney Docket No. 9516-476-999 :

This is a decision on the petition filed December 1, 2008, which is being treated as a request under 37 CFR 3.81(b)[1] to correct the name of the assignee on the front page of the above-identified patent by way of a Certificate of Correction.

There is no indication that the petition is signed by a registered patent attorney or patent agent of record. However, in accordance with 37 CFR 1.34, the signature of Mr. Anthony M. Insogna appearing on the correspondence shall constitute a representation to the United States Patent and Trademark Office that he is authorized to represent the particular party in whose behalf he acts.

The request is **GRANTED**.

Telephone inquiries concerning this decision may be directed to the undersigned at (571) 272-3204. Inquiries regarding the issuance of a certificate of correction should be directed to the Certificate of Correction Branch at (571) 272-4200.

The Certificates of Correction Branch will be notified of this decision granting the petition under 37 CFR 3.81(b) and directing issuance of the requested Certificate of Correction.

Sherry D. Brinkley
Petitions Examiner
Office of Petitions

[1] *See* MPEP 1309, subsection II; and Official Gazette of June 22, 2004.

IN THE UNITED STATES PATENT AND TRADEMARK OFFICE

U.S. Patent No.: 7,435,745 B2 **Issued:** October 14, 2008

Application of: D'Amato, R. J. **Confirmation No.:** 4132

Application No.: 11/411,230 **Group Art Unit:** 1614

Filed: April 26, 2006 **Examiner:** Anderson, J.

For: METHODS AND COMPOSITIONS FOR INHIBITION OF ANGIOGENESIS **Attorney Docket No.:** 9516-476 (JD 501872-999487)

Request Under 37 C.F.R. § 3.81(b) for Issuance to Correct Assignee AND Request for Processing of Certificate of Correction

Adjustment Date: 03/06/2009 CKHLOK
12/02/2008 INTEFSW 00004743 503013 11411230
01 FC:1464 130.00 CR

Mailstop PETITIONS
Commissioner for Patents
P.O. Box 1450
Alexandria, VA 22313-1450

Adjustment Date: 03/06/2009 CKHLOK
10/20/2008 INTEFSW 00004682 503013 11411230
01 FC:1811 100.00 CR

03/06/2009 CKHLOK 00000007 082025 7435745
01 FC:1464 130.00 DA
02 FC:1811 100.00 DA

Sir:

Applicant respectfully requests that this Request under 37 C.F.R. § 3.81(b) to correct the assignee be granted for the reasons set forth below. Further, Applicant requests that the file be transferred to the certificate of correction branch upon grant of this request and the Request for Certificate of Correction previously submitted on October 27, 2008 be processed as indicated in the Communication from the USPTO dated November 13, 2008, a copy of which is attached hereto as **Exhibit A**.

REMARKS

In connection with the above-identified U.S. Patent, 7,435,745 (herein after "the '745 patent"), it is respectfully requested that the cover page of the '745 patent be revised to reflect the correct assignee "The Children's Medical Center Corporation, Boston, MA." Currently, the '745 patent incorrectly indicates "Celgene Corporation, Summit, NJ" as the assignee, and thus, reference to Celgene Corporation

Further, it is respectfully requested that the file of the '745 patent, upon grant of this Petition, be forwarded to Certificates of Correction Branch for issuance of a certificate of correction. No fee is believed due for the certificate of correction since the required fee of $100.00 has been previously paid in this regard. However, if any fees are required in this regard, the Director is authorized to charge such fees to Jones Day Deposit Account No. 503013.

Respectfully submitted,

Date December 1, 2008

Anthony M. Insogna (Reg. No. 35,203)
JONES DAY
12265 El Camino Real, Suite 200
San Diego, CA 92130
(858) 314-1200

UNITED STATES PATENT AND TRADEMARK OFFICE

Commissioner for Patents
United States Patent and Trademark Office
P.O. Box 1450
Alexandria, VA 22313-1450
www.uspto.gov

MORRISON & FOERSTER LLP
12531 HIGH BLUFF DRIVE
SUITE 100
SAN DIEGO CA 92130-2040

COPY MAILED

AUG 0 5 2009

OFFICE OF PETITIONS

In re Application of	:	
Swaim et al.	:	DECISION ON PETITION
Application No. 11/411,239	:	TO WITHDRAW
Filed: April 24, 2006	:	FROM RECORD
Attorney Docket No. 616932000400	:	

This is a decision on the Request to Withdraw as attorney or agent of record under 37 C.F.R. § 1.36(b), filed July 2, 2009.

The request is **APPROVED**.

A grantable request to withdraw as attorney/agent of record must be signed by every attorney/agent seeking to withdraw or contain a clear indication that one attorney is signing on behalf of another/others. The Office will require the practitioner(s) to certify that he, she or they have: (1) given reasonable notice to the client, prior to the expiration of the reply period, which the practitioner(s) intends to withdraw from employment; (2) delivered to the client or a duly authorized representative of the client all papers and property (including funds) to which the client is entitled; and (3) notified the client of any replies that may be due and the time frame within which the client must respond, pursuant to 37 CFR 10.40 (c).

The request was signed by Peng Chen on behalf of all attorneys of record who are associated with customer No. 25225.

All attorneys/agents associated with the Customer Number 25225 have been withdrawn. Applicants are reminded that there is no attorney of record at this time.

The correspondence address of record remains unchanged.

Currently, there is no outstanding Office action that requires a reply.

Telephone inquires concerning this decision should be directed to Petitions Examiner Joan Olszewski at (571) 272-7751. All other inquires concerning either the examination or status of the application should be directed to the Technology Center.

/Liana Walsh/
Liana Walsh
Petitions Examiner
Office of Petitions

UNITED STATES PATENT AND TRADEMARK OFFICE

Commissioner for Patents
United States Patent and Trademark Office
P.O. Box 1450
Alexandria, VA 22313-1450
www.uspto.gov

MORRISON & FOERSTER LLP
12531 HIGH BLUFF DRIVE
SUITE 100
SAN DIEGO CA 92130-2040

COPY MAILED

AUG 2 7 2009

OFFICE OF PETITIONS

In re Application of	:	
Swaim, et al.	:	
Application No. 11/411,239	:	ON APPLICATION
Filed: April 24, 2006	:	FOR
Atty Docket No. 616932000400	:	PATENT TERM ADJUSTMENT

This is in response to the "APPLICATION FOR PATENT TERM ADJUSTMENT UNDER 37 CFR 1.705," filed May 12, 2009[1]. This matter is being properly treated as an application for patent term adjustment pursuant to 37 CFR §1.705(b). Applicants requests that the determination of patent term adjustment be increased from three hundred eighty-five (385) to four hundred ninety-four (494), if the patent issues on August 25, 2009.

The request for review of the patent term adjustment is **GRANTED to the extent indicated herein**.

The Office has updated the PAIR screen to reflect that the correct patent term adjustment at the time of mailing of the Notice of Allowance on February 12, 2009 is **three hundred seventy-one (371) days.**

A copy of the updated PAIR screen, showing the correct determination, is enclosed.

To the extent the instant application for patent term adjustment requests reconsideration of the patent term adjustment as it relates to the Office's failure to issue the patent within 3

[1] This application was timely filed with payment of the Issue Fee on May 15, 2009.

years of the filing date, the application for patent term adjustment under 37 CFR 1.705(b) is **DISMISSED as PREMATURE**.

Knowledge of the actual date the patent issues is required to calculate the amount, if any, of additional patent term patentees are entitled to for Office failure to issue the patent within 3 years. See § 1.702(b). The computer will not undertake the § 1.702(b) calculation until the actual date of issuance of the patent has been determined. Likewise, the computer will not calculate any further Office delay under § 1.702(a)(4) or applicant delay under § 1.704(c)(10) until the actual date of issuance of the patent has been determined. As such, the Office can not make a determination on the correctness of the patent term adjustment until the patent has issued.

Requesting reconsideration of the patent term adjustment to be indicated on the patent under 37 CFR 1.705(b) based on the initial determination of patent term adjustment and a projected issuance date of the patent is premature. Accordingly, it is appropriate to dismiss as premature such a request.

Rather than file an application for patent term adjustment under 37 CFR 1.705(b) contesting the 37 CFR 1.702(b) calculation at the time of the mailing of the notice of allowance, applicants are advised that they may wait until the time of the issuance of the patent and file a request for reconsideration of the patent term adjustment pursuant to 37 CFR 1.705(d). As the USPTO does not calculate the amount of time earned pursuant to 37 CFR 1.702(b) until the time of the issuance of the patent, the Office will consider any request for reconsideration of the patent term adjustment due to an error in the calculation of 37 CFR 1.702(b) to be timely if the request for reconsideration is filed within two months of the issuance of the patent. However, as to all other bases for contesting the initial determination of patent term adjustment received with the notice of allowance, applicants must timely file an application for patent term adjustment prior to the payment of the issue fee[2].

[2] For example, if applicant disputes both the calculation of patent term adjustment under 37 CFR 1.702(a)(1) for Office failure to mail a first Office action or notice of allowance not later than fourteen months after the date on which the application was filed and under 37 CFR 1.702(b) for Office failure to issue a patent within three years of the actual filing date of the application, then applicant must still timely file an application for patent term adjustment prior to the payment of the issue fee to contest the calculation of Office delay in issuing a first Office action or notice of allowance. See 37 CFR 1.705(b) and 35 U.S.C. 154(b)(3)(B). A dispute as to the calculation of

The Office acknowledges submission of the $200.00 fee set forth in 37 CFR 1.18(e) for consideration of the application for patent term adjustment under 37 CFR 1.705(b).

Any request for reconsideration of the patent term adjustment indicated on the patent must be timely filed within 2 months after issuance pursuant to 37 CFR 1.705(d) and must include payment of the required fee under 37 CFR 1.18(e).

To the extent that applicants otherwise request reconsideration of the patent term adjustment at the time of the mailing of the notice of allowance, the request is **GRANTED**.

Applicants acknowledge the periods of adjustment totalling 385 days for Office examination delay and disclose that a period of reduction of 14 days for the filing of a supplemental reply after an initial reply was filed should be entered.

Applicants are correct. A reply to a non-final Office action was filed on September 25, 2008. On October 9, 2008, applicants filed an Information Disclosure Statement, not specifically requested by the examiner. Pursuant to 37 CFR 1.704(c)(8), a period of reduction of 14 days, measured from the day after the initial reply was filed and ending on the date that the supplemental reply was filed should have been entered (September 26, 2008 to October 9, 2008).

In view thereof, the correct patent term adjustment at the time of mailing of the Notice of Allowance on February 12, 2009 is **three hundred seventy-one (371) days**.

The application file is being forwarded to the Office of Patent Publication for issuance of the patent. The patent term adjustment indicated on the patent (as shown on the Issue Notification mailed about three weeks prior to patent issuance) will include any additional adjustment accrued both for Office delay in issuing the patent more than four months after payment of the issue fee and satisfaction of all outstanding requirements, and for the Office taking in excess of three years to issue the patent (to the extent that the three-year period does not overlap with periods already accorded).

---

the §1.702(a)(1) period raised on request for reconsideration of patent term adjustment under 37 CFR 1.705(d) will be dismissed as untimely filed.

Telephone inquiries specific to this matter should be directed to Senior Petitions Attorney Shirene Willis Brantley at (571) 272-3230.

Nancy Johnson
Senior Petitions Attorney
Office of Petitions

Enclosure: Copy of REVISED PALM screen

PTA Calculations for Application: 11/411239			
Application Filing Date:	04/24/2006	PTO Delay (PTO):	385
Issue Date of Patent:		Three Years:	0
Pre-Issue Petitions:	0	Applicant Delay (APPL):	0
Post-Issue Petitions:	0	Total PTA (days):	371
PTO Delay Adjustment:	-14		

File Contents History

Number	Date	Contents Description	PTO	APPL	START
76	08/26/2009	ADJUSTMENT OF PTA CALCULATION BY PTO	14		
75	08/26/2009	ADJUSTMENT OF PTA CALCULATION BY PTO		14	
74	08/26/2009	ADJUSTMENT OF PTA CALCULATION BY PTO		14	
62	02/12/2009	MAIL NOTICE OF ALLOWANCE	18		47
61	02/11/2009	ISSUE REVISION COMPLETED			
60	02/11/2009	DOCUMENT VERIFICATION			
59	02/11/2009	NOTICE OF ALLOWANCE DATA VERIFICATION COMPLETED			
58	02/04/2009	NOTICE OF ALLOWABILITY			
57	01/30/2009	EXAMINER INTERVIEW SUMMARY RECORD (PTOL - 413)			
56	10/09/2008	INFORMATION DISCLOSURE STATEMENT CONSIDERED			
51	01/27/2009	CASE DOCKETED TO EXAMINER IN GAU			
50	10/09/2008	INFORMATION DISCLOSURE STATEMENT (IDS) FILED			
49	09/25/2008	NEW OR ADDITIONAL DRAWING FILED			
48	10/10/2008	DATE FORWARDED TO EXAMINER			
47	09/25/2008	RESPONSE AFTER NON-FINAL ACTION			
46	10/09/2008	INFORMATION DISCLOSURE STATEMENT (IDS) FILED			
45	08/06/2008	CORRESPONDENCE ADDRESS CHANGE			
44	06/03/2008	REFERENCE CAPTURE ON IDS			
43	06/03/2008	INFORMATION DISCLOSURE STATEMENT (IDS) FILED			
42	06/25/2008	MAIL NON-FINAL REJECTION	367		-1
41	06/23/2008	NON-FINAL REJECTION			
		INFORMATION DISCLOSURE STATEMENT			

34	06/03/2008	CONSIDERED			
33	01/17/2007	INFORMATION DISCLOSURE STATEMENT CONSIDERED			
31	06/03/2008	INFORMATION DISCLOSURE STATEMENT (IDS) FILED			
30	06/05/2007	CASE DOCKETED TO EXAMINER IN GAU			
29	05/24/2007	TRANSFER INQUIRY TO GAU			
28	05/24/2007	TRANSFER INQUIRY TO GAU			
27	05/24/2007	TRANSFER INQUIRY TO GAU			
26	05/24/2007	TRANSFER INQUIRY TO GAU			
25	05/15/2007	TRANSFER INQUIRY TO GAU			
24	01/17/2007	REFERENCE CAPTURE ON IDS			
23.7	01/17/2007	INFORMATION DISCLOSURE STATEMENT (IDS) FILED			
23	01/17/2007	INFORMATION DISCLOSURE STATEMENT (IDS) FILED			
22	11/16/2006	PRELIMINARY AMENDMENT			
21	11/03/2006	MAIL NON-COMPLIANT PRELIMINARY AMENDMENT			
20	11/02/2006	NON-COMPLIANT PRELIMINARY AMENDMENT			
19	10/24/2006	PRELIMINARY AMENDMENT			
18	10/24/2006	OATH OR DECLARATION FILED (INCLUDING SUPPLEMENTAL)			
17	07/18/2006	CORRECTED FILING RECEIPT			
16	10/24/2006	CORRECTED FILING RECEIPT			
15	10/19/2006	PRELIMINARY AMENDMENT			
14	10/19/2006	OATH OR DECLARATION FILED (INCLUDING SUPPLEMENTAL)			
13	08/22/2006	IFW TSS PROCESSING BY TECH CENTER COMPLETE			
12	08/16/2006	PRELIMINARY AMENDMENT			
11	07/27/2006	APPLICATION DISPATCHED FROM OIPE			
10	07/27/2006	APPLICATION IS NOW COMPLETE			
9	07/18/2006	PAYMENT OF ADDITIONAL FILING FEE/PREEXAM			
8	07/18/2006	A STATEMENT BY ONE OR MORE INVENTORS SATISFYING THE REQUIREMENT UNDER 35 USC 115, OATH OF THE APPLIC			
7	05/19/2006	NOTICE MAILED--APPLICATION INCOMPLETE--FILING DATE ASSIGNED			

5	05/09/2006	CLEARED BY L&R (LARS)			
4	05/03/2006	REFERRED TO LEVEL 2 (LARS) BY OIPE CSR			
3	05/03/2006	CASE CLASSIFIED BY OIPE			
2	04/30/2006	IFW SCAN & PACR AUTO SECURITY REVIEW			
1	04/24/2006	INITIAL EXAM TEAM NN			

Search Another: Application# Search

EXPLANATION OF PTA CALCULATION

EXPLANATION OF PTE CALCULATION

To go back, right click here and select Back. To go forward, right click here and select Forward. To refresh, right click here and select Refresh.

Back to OASIS | Home page

UNITED STATES PATENT AND TRADEMARK OFFICE

Commissioner for Patents
United States Patent and Trademark Office
P.O. Box 1450
Alexandria, VA 22313-1450
www.uspto.gov

COOLEY GODWARD KRONISH LLP
ATTN: Patent Group
Suite 1100
777 - 6th Street, NW
WASHINGTON DC 20001

MAILED

MAR 2 6 2010

OFFICE OF PETITIONS

In re Patent No. 7,595,169	: DECISION ON REQUEST
Swaim et al.	: FOR
Issue Date: September 29, 2009	: RECONSIDERATION OF
Application No. 11/411,239	: PATENT TERM ADJUSTMENT
Filed: April 24, 2006	: and
Atty Docket No. ACCM-005/ 01US 311816-2017	: NOTICE OF INTENT TO ISSUE : CERTIFICATE OF CORRECTION

This is a decision on the petition filed on November 24, 2009, which is being treated as a petition under 37 CFR 1.705(d) requesting that the patent term adjustment indicated on the above-identified patent be corrected to indicate that the term of the above-identified patent is extended or adjusted by five hundred twenty-nine (529) days.

The petition to correct the patent term adjustment indicated on the above-identified patent to indicate that the term of the above-identified patent is extended or adjusted five hundred twenty-nine (529) days is **GRANTED**.

The Office acknowledges the submission of the $200.00 fee set forth in 37 CFR 1.18(e). No additional fees are required.

The application is being forwarded to the Certificates of Correction Branch for issuance of a certificate of correction. The Office will issue a certificate of correction indicating that the term of the above-identified patent is extended or adjusted by **five hundred twenty-nine (529) days.**

Telephone inquiries specific to this matter should be directed to Senior Petitions Attorney Shirene Willis Brantley at (571) 272-3230.

Anthony Knight
Supervisor
Office of Petitions

Enclosure: Copy of DRAFT Certificate of Correction

UNITED STATES PATENT AND TRADEMARK OFFICE

CERTIFICATE OF CORRECTION

PATENT : 7,595,169 B2

DATED : **September 29, 2009** **DRAFT**

INVENTOR(S) : Swaim et al.

It is certified that error appears in the above-identified patent and that said Letters Patent is hereby corrected as shown below:

On the cover page,

[*] Notice: Subject to any disclaimer, the term of this patent is extended or adjusted under 35 U.S.C. 154(b) by 388 days

Delete the phrase "by 388 days" and insert – by 529 days--

UNITED STATES PATENT AND TRADEMARK OFFICE

UNITED STATES DEPARTMENT OF COMMERCE
United States Patent and Trademark Office
Address: COMMISSIONER FOR PATENTS
P.O. Box 1450
Alexandria, Virginia 22313-1450
www.uspto.gov

APPLICATION NO.	FILING DATE	FIRST NAMED INVENTOR	ATTORNEY DOCKET NO.	CONFIRMATION NO.
11/411,270	04/26/2006	Tak-soo Kim	0002845USU/3062	6983

7590 07/03/2008

Charles N.J. Ruggiero
Ohlandt, Greeley, Ruggiero & Perle, L.L.P.
10th Floor
One Landmark Square
Stamford, CT 06901-2682

EXAMINER	
HOPKINS, ROBERT A	

ART UNIT	PAPER NUMBER
1797	

MAIL DATE	DELIVERY MODE
07/03/2008	PAPER

DECISION GRANTING PETITION UNDER 37 CFR 1.138(d)

The declaration of express abandonment is recognized

This is in response to the petition under 37 CFR 1.138(d), requesting for a refund of any previously paid search fee and excess claims fee in the above-identified application.

The petition is granted.

The express abandonment is recognized. Any previously paid search fee and excess claims fee are hereby refunded.

Telephone inquiries should be directed to the Office of Data Management at (571) 272-4200.

Patent Publication Branch
Office of Data Management

Refund Ref:
07/09/2008 NFARMER 0000163516

CHECK Refund Total: $500.00

Adjustment date: 07/09/2008 NFARMER
04/28/2006 SDIRETA1 00000020 11411270
02 FC:1111 -500.00 OP

UNITED STATES PATENT AND TRADEMARK OFFICE

Commissioner for Patents
United States Patent and Trademark Office
P.O. Box 1450
Alexandria, VA 22313-1450
www.uspto.gov

RISSMAN HENDRICKS & OLIVERIO, LLP
100 Cambridge Street
Suite 2101
BOSTON MA 02114

MAILED

JUL 29 2010

OFFICE OF PETITIONS

In re Application of	:	
Michael T. Milbocker	:	
Application No. 11/411,283	:	DECISION ON PETITION
Filed: April 26, 2006	:	
Attorney Docket No. P020-7003US1	:	

This is a decision on the petition under the unintentional provisions of 37 CFR 1.137(b), filed July 9, 2010, to revive the above-identified application.

The petition is **GRANTED**.

The application became abandoned for failure to reply in a timely manner to the non-final Office action mailed, December 10, 2009, which set a shortened statutory period for reply of three (3) months. No extensions of time under the provisions of 37 CFR 1.136(a) were obtained. Accordingly, the application became abandoned on March 11, 2010. The Notice of Abandonment was mailed June 23, 2010.

The petition satisfies the requirements of 37 CFR 1.137(b) in that petitioner has supplied (1) the reply in the form of an amendment, (2) the petition fee of $810, and (3) a proper statement of unintentional delay.

An extension of time under 37 CFR 1.136 must be filed prior to the expiration of the maximum extendable period for reply. See In re Application of S., 8 USPQ2d 1630, 1631 (Comm'r Pats. 1988). Since the $555 extension of time fee submitted with the petition on July 9, 2010 was subsequent to the maximum extendable period for reply, petitioner may request a refund of this fee by writing to the following address: Mail Stop 16, Commissioner for Patents, P. O. Box 1450, Alexandria, VA 22313-1450. A copy of this decision should accompany petitioner's request.

Telephone inquiries concerning this decision should be directed to Terri Johnson at (571) 272-2991.

This application is being referred to Technology Center AU 1615 for appropriate action by the Examiner in the normal course of business on the reply received.

Terri Johnson
Petitions Examiner
Office of Petitions

UNITED STATES PATENT AND TRADEMARK OFFICE

UNITED STATES DEPARTMENT OF COMMERCE
United States Patent and Trademark Office
Address: COMMISSIONER FOR PATENTS
P.O. Box 1450
Alexandria, Virginia 22313-1450
www.uspto.gov

WOLF GREENFIELD (Microsoft Corporation)
C/O WOLF, GREENFIELD & SACKS, P.C.
600 ATLANTIC AVENUE
BOSTON, MA 02210-2206

Mail Date: 04/21/2010

Applicant	: Randall E. Aull	: DECISION ON REQUEST FOR
Patent Number	: 7650406	: RECALCULATION of PATENT
Issue Date	: 01/19/2010	: TERM ADJUSTMENT IN VIEW
Appliction No	: 11/411,290	: OF WYETH AND NOTICE OF INTENT TO
Filed	: 04/26/2006	: ISSUE CERTIFICATE OF CORRECTION
		:

The Request for Recalculation is **GRANTED** to the extent indicated.

The patent term adjustment has been determined to be **718** days. The USPTO will *sua sponte* issue a certificate of correction reflecting the amount of PTA days determined by the recalculation.

Prior to the issuance of the certificate of correction, the USPTO will afford patentee an opportunity to be heard and request reconsideration. Accordingly, patentee has **one month or thirty (30) days**, whichever is longer, to file a request for reconsideration of this patent term adjustment calculation. See 35 U.S.C. 154(b)(3)(B)(ii) and 37 CFR 1.322(a)(4). No extensions of time will be granted under 37 CFR 1.136.

Patentee should use document code PET.OP if electronically filing a request for reconsideration of this patent term adjustment calculation. The patentee must also include the information required by 37 CFR 1.705(b)(2) and the fee required by 37 CFR 1.18(e). If patentee does not file a timely request for reconsideration of this patent term adjustment calculation including the information required by 37 CFR 1.705(b)(2) and the fee required by 37 CFR 1.18(e), the USPTO will issue a certificate of correction reflecting the PTA determination noted above.

Patentee should be aware that in order to preserve the right to review in the United States District Court for the District of Columbia of the USPTO patent term adjustment determination, patentee must ensure that he or she also take the steps required under 35 U.S.C. 154(b)(4)(A) in a timely manner. Nothing in the request for recalculation should be construed as providing an alternative time frame for commencing a civil action under 35 U.S.C. 154(b)(4)(A).

Any questions concerning this decision should be directed to the Office of Patent Legal Administration at 571-272-7702.

UNITED STATES PATENT AND TRADEMARK OFFICE

Commissioner for Patents
United States Patent and Trademark Office
P.O. Box 1450
Alexandria, VA 22313-1450
www.uspto.gov

BROOKS KUSHMAN P.C.
1000 TOWN CENTER
TWENTY-SECOND FLOOR
SOUTHFIELD, MI 48075

COPY MAILED

APR 0 9 2008

OFFICE OF PETITIONS

In re Application of	:	
Earney E. Stoutenburg, et al.	:	
Application No. 11/411,296	:	DECISION GRANTING PETITION
Filed: April 26, 2006	:	UNDER 37 CFR 1.313(c)(2)
Attorney Docket No. WEST 0102 PUS3	:	

This is a decision on the petition under 37 CFR 1.313(c)(2), filed April 9, 2008, to withdraw the above-identified application from issue after payment of the issue fee.

The petition is **GRANTED**.

The above-identified application is withdrawn from issue for consideration of a submission under 37 CFR 1.114 (request for continued examination). *See* 37 CFR 1.313(c)(2).

Petitioner is advised that the issue fee paid on February 29, 2008 cannot be refunded. If, however, this application is again allowed, petitioner may request that it be applied towards the issue fee required by the new Notice of Allowance.[1]

Telephone inquiries regarding this decision should be directed to undersigned at (571) 272-1642.

This application is being referred to Technology Center AU 2876 for processing of the request for continued examination under 37 CFR 1.114 and for consideration of the concurrently filed information disclosure statement.

April M. Wise
Petitions Examiner
Office of Petitions

[1] *The request to apply the issue fee to the new Notice may be satisfied by completing and returning the new Part B – Fee(s) Transmittal Form (along with any balance due at the time of submission). Petitioner is advised that the Issue Fee Transmittal Form* ***must*** *be completed and timely submitted to avoid abandonment of the application.*

UNITED STATES PATENT AND TRADEMARK OFFICE

Commissioner for Patents
United States Patent and Trademark Office
P. O. Box 1450
Alexandria, VA 22313-1450
www. uspto. gov

BROOKS KUSHMAN P.C.
1000 TOWN CENTER
TWENTY-SECOND FLOOR
SOUTHFIELD, MI 48075

COPY MAILED

SEP 18 2008

OFFICE OF PETITIONS

In re Application of :
Earney E. Stoutenburg et al :
Application No. 11/411,296 : ON PETITION
Filed: April 26, 2006 :
Attorney Docket No. WEST 0102 PUS3

This is a decision on the petition, filed September 17, 2008 under 37 CFR 1.313(c)(2) to withdraw the above-identified application from issue after payment of the issue fee.

The petition is **GRANTED**.

The above-identified application is withdrawn from issue for consideration of a submission under 37 CFR 1.114 (request for continued examination). See 37 CFR 1.313(c)(2).

Petitioner is advised that the issue fee paid on June 23, 2008 in the above-identified application cannot be refunded. If, however, the above-identified application is again allowed, petitioner may request that it be applied towards the issue fee required by the new Notice of Allowance.[1]

Telephone inquiries should be directed to Irvin Dingle at (571) 272-3210.

This matter is being referred to Technology Center AU 2876 for processing of the request for continued examination under 37 CFR 1.114 and for consideration of the concurrently filed Information Disclosure Statement.

Irvin Dingle
Petitions Examiner
Office of Petitions

[1] The request to apply the issue fee to the new Notice may be satisfied by completing and returning the new Issue Fee Transmittal Form PTOL-85(b), which includes the following language thereon: Commissioner for Patents is requested to apply the Issue Fee and Publication Fee (if any) or re-apply any previously paid issue fee to the application identified above. Petitioner is advised that, whether a fee is indicated as being due or not, the Issue Fee Transmittal Form **must** be completed and timely submitted to avoid abandonment. Note the language in bold text on the first page of the Notice of Allowance and Fee(s) Due (PTOL-85).

UNITED STATES PATENT AND TRADEMARK OFFICE

Commissioner for Patents
United States Patent and Trademark Office
P.O. Box 1450
Alexandria, VA 22313-1450
www.uspto.gov

BROOKS KUSHMAN P.C.
1000 TOWN CENTER
TWENTY-SECOND FLOOR
SOUTHFIELD MI 48075

MAILED

MAY 11 2009

OFFICE OF PETITIONS

In re Application of	:	
Earney E. Stoutenburg, et al.	:	
Application No. 11/411,296	:	DECISION GRANTING PETITION
Filed: April 26, 2006	:	UNDER 37 CFR 1.313(c)(2)
Attorney Docket No. WEST 0102 PUS3	:	

This is a decision on the petition under 37 CFR 1.313(c)(2), filed May 11, 2009, to withdraw the above-identified application from issue after payment of the issue fee.

The petition is **GRANTED**.

The above-identified application is withdrawn from issue for consideration of a submission under 37 CFR 1.114 (request for continued examination). *See* 37 CFR 1.313(c)(2).

Petitioner is advised that the issue fee paid on February 2, 2009 cannot be refunded. If, however, this application is again allowed, petitioner may request that it be applied towards the issue fee required by the new Notice of Allowance.[1]

Telephone inquiries should be directed to Terri Williams at (571) 272-2991.

This application is being referred to Technology Center AU 2876 for processing of the request for continued examination under 37 CFR 1.114 and for consideration of the concurrently filed information disclosure statement.

Terri Williams
Petitions Examiner
Office of Petitions

[1] *The request to apply the issue fee to the new Notice may be satisfied by completing and returning the new Part B – Fee(s) Transmittal Form (along with any balance due at the time of submission). Petitioner is advised that the Issue Fee Transmittal Form must be completed and timely submitted to avoid abandonment of the application.*

UNITED STATES PATENT AND TRADEMARK OFFICE

Commissioner for Patents
United States Patent and Trademark Office
P.O. Box 1450
Alexandria, VA 22313-1450
www.uspto.gov

TRANSMETA C/O MURABITO HAO & BARNES LLP
TWO NORTH MARKET STREET
THIRD FLOOR
SAN JOSE CA 95113

COPY MAILED
SEP 26 2008

In re Application of :
Halepet, et al. :
Application No. 11/411,309 : ON PETITION
Filed: April 25, 2006 :
Attorney Docket No. TRAN-P514

This is a decision on the petition to revive under 37 CFR 1.137(b), and the petition to expedite under 37 CFR 1.182, both filed on September 10, 2008.

The petition under 37 CFR 1.182 is **GRANTED**.

The petition under 37 CFR 1.137(b) is **GRANTED**.

The above-identified application became abandoned for failure to timely pay the issue fee in response to the Notice of Allowance mailed April 18, 2008. This Notice set a statutory period for reply of three (3) months for issue fee transmittal. No issue fee having been received, the application became abandoned on July 19, 2008. The Office mailed a Notice of Abandonment on August 15, 2008.

With the instant petition, applicant paid the petition fee, made the proper statement of unintentional delay, and submitted the required reply in the form of the issue fee.

The application is being forwarded to the Office of Data Management for processing into a patent.

Telephone inquiries related to this decision should be directed to the undersigned at (571)272-3207.

Cliff Congo
Petitions Attorney
Office of Petitions

UNITED STATES PATENT AND TRADEMARK OFFICE

Commissioner for Patents
United States Patent and Trademark Office
P.O. Box 1450
Alexandria, VA 22313-1450
www.uspto.gov

TRANSMETA C/O MURABITO, HAO & BARNES LLP
TWO NORTH MARKET STREET, THIRD FLOOR
SAN JOSE, CA 95113

COPY MAILED

OCT 3 1 2008

OFFICE OF PETITIONS

In re Application of :
HALEPETE, et al. :
Application No. 11/411,309 : DECISION GRANTING PETITION
Filed: April 25, 2006 : UNDER 37 CFR 1.313(c)(2)
Attorney Docket No. **TRAN-P514** :

This is a decision on the petition under 37 CFR 1.313(c)(2), filed October 28, 2008, to withdraw the above-identified application from issue after payment of the issue fee.

The petition is **GRANTED**.

The above-identified application is withdrawn from issue for consideration of a submission under 37 CFR 1.114 (request for continued examination). *See* 37 CFR 1.313(c)(2).

Petitioner is advised that the issue fee paid on September 10, 2008 cannot be refunded. If, however, this application is again allowed, petitioner may request that it be applied towards the issue fee required by the new Notice of Allowance.[1]

Telephone inquiries should be directed to undersigned at (571) 272-7253.

This application is being referred to Technology Center AU 2111 for processing of the request for continued examination under 37 CFR 1.114.

Monica A. Graves
Petitions Examiner
Office of Petitions

[1] *The request to apply the issue fee to the new Notice may be satisfied by completing and returning the new Part B – Fee(s) Transmittal Form (along with any balance due at the time of submission). Petitioner is advised that the Issue Fee Transmittal Form must be completed and timely submitted to avoid abandonment of the application.*

UNITED STATES PATENT AND TRADEMARK OFFICE

UNITED STATES DEPARTMENT OF COMMERCE
United States Patent and Trademark Office
Address: COMMISSIONER FOR PATENTS
P.O. Box 1450
Alexandria, Virginia 22313-1450
www.uspto.gov

MCANDREWS HELD & MALLOY, LTD
500 WEST MADISON STREET
SUITE 3400
CHICAGO, IL 60661

Mail Date: 04/21/2010

Applicant	: Jeffrey Douglas Carr	: DECISION ON REQUEST FOR
Patent Number	: 7594110	: RECALCULATION of PATENT
Issue Date	: 09/22/2009	: TERM ADJUSTMENT IN VIEW
Appliction No	: 11/411,331	: OF WYETH AND NOTICE OF INTENT TO
Filed	: 04/26/2006	: ISSUE CERTIFICATE OF CORRECTION
		:

The Request for Recalculation is **GRANTED** to the extent indicated.

The patent term adjustment has been determined to be **819** days. The USPTO will *sua sponte* issue a certificate of correction reflecting the amount of PTA days determined by the recalculation.

Prior to the issuance of the certificate of correction, the USPTO will afford patentee an opportunity to be heard and request reconsideration. Accordingly, patentee has **one month or thirty (30) days**, whichever is longer, to file a request for reconsideration of this patent term adjustment calculation. See 35 U.S.C. 154(b)(3)(B)(ii) and 37 CFR 1.322(a)(4). No extensions of time will be granted under 37 CFR 1.136.

Patentee should use document code PET.OP if electronically filing a request for reconsideration of this patent term adjustment calculation. The patentee must also include the information required by 37 CFR 1.705(b)(2) and the fee required by 37 CFR 1.18(e). If patentee does not file a timely request for reconsideration of this patent term adjustment calculation including the information required by 37 CFR 1.705(b)(2) and the fee required by 37 CFR 1.18(e), the USPTO will issue a certificate of correction reflecting the PTA determination noted above.

Patentee should be aware that in order to preserve the right to review in the United States District Court for the District of Columbia of the USPTO patent term adjustment determination, patentee must ensure that he or she also take the steps required under 35 U.S.C. 154(b)(4)(A) in a timely manner. Nothing in the request for recalculation should be construed as providing an alternative time frame for commencing a civil action under 35 U.S.C. 154(b)(4)(A).

Any questions concerning this decision should be directed to the Office of Patent Legal Administration at 571-272-7702.

UNITED STATES PATENT AND TRADEMARK OFFICE

UNITED STATES DEPARTMENT OF COMMERCE
United States Patent and Trademark Office
Address: COMMISSIONER FOR PATENTS
P.O. Box 1450
Alexandria, Virginia 22313-1450
www.uspto.gov

THE PROCTER & GAMBLE COMPANY
Global Legal Department - IP
Sycamore Building - 4th Floor
299 East Sixth Street
CINCINNATI, OH 45202

Mail Date: 04/21/2010

Applicant	: Linda Evers Smith	: DECISION ON REQUEST FOR
Patent Number	: 7572504	: RECALCULATION of PATENT
Issue Date	: 08/11/2009	: TERM ADJUSTMENT IN VIEW
Appliction No	: 11/411,333	: OF WYETH
Filed	: 04/26/2006	:
		:

The Patentee's Request for Recalculation is **DISMISSED.**

This Request is deemed ineligible for consideration for one or more of the following reasons:

(A). The patent for which PTA recalculation is requested is either a design or reissue application or is a reexamination proceeding;

(B). The patent for which PTA recalculation is requested resulted from a utility or plant application filed under 35 USC 111(a) before May 29, 2000 and no CPA filed in the application on/after May 29, 2000;

(C). The patent for which PTA recalculation is requested resulted from an international application in which the international filing date was before May 29, 2000 and no CPA filed in the application on/after May 29, 2000;

(D). The patent for which PTA recalculation is requested issued on/after March 2, 2010;

(E). The Request for Recalculation was filed more than 180 days after the grant date of the patent and the request was not filed within two months of a dismissal of a request for reconsideration of the of the patent term under 37 CFR 1.705(d);

(F). The Request for Recalculation is not solely limited to USPTO pre-Wyeth interpretation of 35 U.S.C. 154(b)(2)(A);

or

(G). A civil action was filed pursuant to 35 U.S.C. 154(b)(4)(A)concerning the same patent at issue in this request.

Patentee may file a reply to this decision dismissing the Request for Recalculation. Patentee must file such reply within one month or thirty days, whichever is longer, of the mail date of the decision dismissing the Request for Recalculation. No fee is required if patentee is asserting in the reply that the dismissal for ineligibility is improper.

Patentee should use document code PET.OP if electronically filing a reply to this dismissal. If the USPTO finds that the request was improperly deemed ineligible, the USPTO will mail applicant a recalculation determination.

Patentee should be aware that in order to preserve the right to review in the United States District Court for the District of Columbia of the USPTO patent term adjustment determination, patentee must ensure that he or she also take the steps required under 35 U.S.C. 154(b)(4)(A). Nothing in the request for recalculation should be construed as providing an alternative time frame for commencing a civil action under 35 U.S.C. 154 (b)(4)(A).

Any questions concerning this decision should be directed to the Office of Patent Legal Administration at 571-272-7702.

UNITED STATES PATENT AND TRADEMARK OFFICE

UNITED STATES DEPARTMENT OF COMMERCE
United States Patent and Trademark Office
Address: COMMISSIONER FOR PATENTS
P.O. Box 1450
Alexandria, Virginia 22313-1450
www.uspto.gov

THE PROCTER & GAMBLE COMPANY
Global Legal Department - IP
Sycamore Building - 4th Floor
299 East Sixth Street
CINCINNATI, OH 45202

Mail Date: 05/18/2010

Applicant : Linda Evers Smith
Patent Number : 7572504
Issue Date : 08/11/2009
Application No: 11/411,333
Filed : 04/26/2006

: NOTICE CONCERNING IMPROPER
: DISMISSAL OF THE REQUEST
: FOR RECALCULATION OF
: PATENT TERM ADJUSTMENT
: IN VIEW OF WYETH

The United States Patent and Trademark Office (USPTO) discovered that in processing the recent recalculation decisions mailed in response to patentee's filed Request for Recalculation of Patent Term Adjustment in view of Wyeth, the USPTO mistakenly dismissed a small number of requests as ineligible. The dismissals involve requests that were filed on February 9-12, 2010, for patents that were granted on August 11, 2009. Any request that was filed on February 8, 2010 was properly deemed eligible for patent term adjustment (PTA) and was recalculated.

Patents meeting the above criteria were eligible because the USPTO was closed February 8-11, 2010, due to a snowstorm. See Closing of the United States Patent and Trademark Office from Monday February, 8, 2010, through Thursday, February 11, 2010, 1352 *Off. Gaz. Pat. Office* 146 (March 16, 2010). The Office considered each day from Monday, February 8, 2010, through Thursday, February 11, 2010, to be a "Federal holiday within the District of Columbia" under 35 U.S.C. § 21(b) and 37 CFR 1.6, 1.7, 1.9, 2.2(d), 2.195 and 2.196. Any actions that were due from Monday, February, 8, 2010, through Thursday, February 11, 2010, (or the preceding Saturday (February 6, 2010) or Sunday (February 7, 2010)) will be considered timely if the action was taken on the next succeeding business day on which the USPTO was open, which was February 12, 2010.

This notice **VACATES** the previous mailed decision in the patented file that deemed patentee ineligible for the request for recalculation. Patentee's request for recalculation is GRANTED.

The patent term adjustment has been determined to be **750** days. The USPTO will *sua sponte* issue a certificate of correction reflecting the amount of PTA days determined by the recalculation.

Prior to the issuance of the certificate of correction, the USPTO will afford patentee an opportunity to be heard and request reconsideration. Accordingly, patentee has **one month or thirty (30) days** from the mail date of this notice, whichever is longer, to file a request for reconsideration of this PTA calculation. See 35 U.S.C. § 154(b)(3)(B)(ii) and 37 CFR 1.322(a)(4).

Patentee should use document code PET.OP if electronically filing a request for reconsideration of this PTA calculation. The patentee must also include the information required by 37 CFR 1.705(b)(2) and the fee required by 37 CFR 1.18(e). If patentee does not file a timely request for reconsideration of this PTA calculation, including the information required by 37 CFR 1.705(b)(2) and the fee required by 37 1.18(e), the USPTO will issue a certificate of correction reflecting the PTA determination noted above.

Patentee should be aware that in order to preserve the right of review of the USPTO's PTA deterimation in the United States District Court for the District of Columbia, patentee must ensure that the steps required under 35 U.S.C. § 154(b)(4) are taken in a timely manner. Nothing in the request for recalculation should be construed as providing an alternative time frame for commencing a civil action under 35 U.S.C. § 154(b)(4).

UNITED STATES PATENT AND TRADEMARK OFFICE

Commissioner for Patents
United States Patent and Trademark Office
P.O. Box 1450
Alexandria, VA 22313-1450
www.uspto.gov

BRINKS HOFER GILSON & LIONE
P.O. BOX 10395
CHICAGO IL 60610

COPY MAILED

JUL 27 2007

OFFICE OF PETITIONS

In re Application of :
Ban Hok Goh :
Application No. 11/411,335 : DECISION ON PETITION
Filed: 04/26/2006 :
Attorney Docket No. 10808-327 :

This is a decision on the petition under 37 CFR 1.181, filed February 7, 2007, requesting that the Office withdraw the holding of abandonment in the above-identified application.

The application became abandoned for failure to reply in a timely manner to the Notice to File Missing Parts of Nonprovisional Application (Notice), mailed May 18, 2006. The Notice set a period for reply of two (2) months from the mail date of the Notice. In the absence of a timely filed reply, the Office mailed a Notice of Abandonment on January 22, 2007.

Petitioners asserted that they filed a timely and proper response on August 31, 2006, in the form of an executed declaration and a request for an extension of time for response within the second month.

Upon a review of the record, it appears that the application number in the heading of the response identified Application No. "11/311,335" rather than the intended Application No. "11/411,335." The response was located in the file of Application No. 11/311,335. A review of the correspondence indicates that the USPTO received the response on August 31, 2006, but it was not timely matched with the file due to the incorrect application number.

Under current Office procedure, if a paper having an incorrect application number contains sufficient information to identify the correct application and was timely received at the Office, the holding of abandonment will be withdrawn. In reviewing the papers, it is concluded that there was sufficient information thereon to associate the papers with the present application file.

For the reasons stated above, the petition is **granted**. The Notice of Abandonment is hereby withdrawn.

The Office will transfer the surcharge and the extension of time fee from Application No. 11/311,335 to Application No. 11/411,335.

The matter is being referred to the Office of Initial Patent Examination for further processing.

Telephone inquiries regarding this decision maybe directed to the undersigned at (571) 272-3211.

Christina Tartera Donnell

Christina Tartera Donnell
Senior Petitions Attorney
Office of Petitions

UNITED STATES PATENT AND TRADEMARK OFFICE

Commissioner for Patents
United States Patent and Trademark Office
P.O. Box 1450
Alexandria, VA 22313-1450
www.uspto.gov

F. CHAU & ASSOCIATES, LLC
130 WOODBURY ROAD
WOODBURY NY 11797

COPY MAILED

JAN 04 2010

In re Patent No. 7,576,407 :
Issue Date : August 18, 2009 :
Application No. 11/411,341 : ON PETITION
Filed: April 26, 2006 :
Attorney Docket No. 8729-265 (SIP50137US) :

This is a decision on the petition, filed September 1, 2009, which is being treated as a request under 37 CFR 3.81(b)[1] to correct the assignee's name on the Fee(s) Transmittal form PTOL-85(b) so that the Letters Patent will issue to the assignee.

The request is **DISMISSED**.

37 CFR 3.81(b), effective June 25, 2004, reads:

> *After payment of the issue fee:* Any request for issuance of an application in the name of the assignee submitted after the date of payment of the issue fee, and any request for a patent to be corrected to state the name of the assignee, must state that the assignment was submitted for recordation as set forth in § 3.11 before issuance of the patent, and must include a request for a certificate of correction under § 1.323 of this chapter (accompanied by the fee set forth in § 1.20(a)) and the processing fee set forth in § 1.17(i) of this chapter.

The request under 37 CFR 3.81(b) was not accompanied by a statement that the assignment was submitted for recordation before issuance of the patent. As petitioner has failed to comply with the provisions of 37 CFR 3.81(b), the request cannot be granted at this time.

Inquiries concerning this decision should be directed to Diane Goodwyn at (571) 272-6735.

---

[1] *See* MPEP 1309, subsection II and Official Gazette of June 22, 2004

Any questions concerning issuance of a certificate of correction should be directed to the Certificates of Correction Branch at (571) 272-4200.

Thurman K. Page
Petitions Examiner
Office of Petitions

UNITED STATES PATENT AND TRADEMARK OFFICE

Commissioner for Patents
United States Patent and Trademark Office
P.O. Box 1450
Alexandria, VA 22313-1450
www.uspto.gov

F. CHAU & ASSOCIATES, LLC
130 WOODBURY ROAD
WOODBURY NY 11797

MAILED

MAR 29 2010

OFFICE OF PETITIONS

In re Patent No. 7,576,407 :
Issue Date: August 18, 2009 :
Application No. 11/411,341 : ON PETITION
Filed: April 26, 2006 :
Attorney Docket No. 8729-265 :
(SIP050137US)

This is a decision on the petition filed January 18, 2010, which is being treated as a request under 37 CFR 3.81(b)[1] to correct the name of the assignee on the front page of the above-identified patent by way of a Certificate of Correction.

The request is **GRANTED**.

Telephone inquiries concerning this decision may be directed to Diane Goodwyn at (571) 272-6735. Inquiries regarding the issuance of a certificate of correction should be directed to the Certificate of Correction Branch at (571) 272-4200.

The Certificates of Correction Branch will be notified of this decision granting the petition under 37 CFR 3.81(b) and directing issuance of the requested Certificate of Correction.

Thurman K. Page
Petitions Examiner
Office of Petitions

[1] *See* MPEP 1309, subsection II; and Official Gazette of June 22, 2004.

UNITED STATES PATENT AND TRADEMARK OFFICE

Commissioner for Patents
United States Patent and Trademark Office
P.O. Box 1450
Alexandria, VA 22313-1450
www.uspto.gov

SPANSION LLC
TECHNOLOGY LAW DEPT. M/S 68
915 DEGUIGNE DRIVE
SUNNYVALE CA 94088

MAILED

SEP 30 2009

OFFICE OF PETITIONS

In re Application of	:	
Min et al.	:	
Application No. 11/411353	:	DECISION ON
Filing or 371(c) Date: 04/25/2006	:	PETITION
Title of Invention: SELECTIVE CONTACT	:	
FORMATION USING MASKING AND	:	
RESIST PATTERNING TECHNIQUES	:	

This is a decision on the Petition to Revive an Unintentionally Abandoned Application Under 37 C.F.R. § 1.137(b), filed August 31, 2009.

The petition is **GRANTED**.

This application became abandoned for failure to timely pay the issue and publication fees on or before April 13, 2009, as required by the Notice of Allowance and Fee(s) Due, mailed January 13, 2009. Accordingly, the date of abandonment of this application is April 14, 2009.

The petition satisfies the requirements of 37 CFR 1.137(b) in that petitioner has supplied (1) the reply in the form of payment of the issue fee and the publication fee; (2) the petition fee; and (3) a proper statement of unintentional delay.

The application file does not indicate a change of address has been filed in this case, although the address given on the petition differs from the address of record. A change of address should be filed in this case in accordance with MPEP 601.03. A courtesy copy of this decision is being mailed to the address noted on the petition. However, until otherwise instructed, all future correspondence regarding this application will be mailed solely to the address of record.

Applicant is ALSO advised that, in patented files: requests for changes of correspondence address, powers of attorney, revocations of powers of attorney, withdrawal of attorney and submissions under 37 CFR 1.501: Designation of, or changes to, a fee address, should be addressed to Mail Stop M Correspondence.

Telephone inquiries concerning this matter should be directed to the undersigned at (571) 272-3232.

This application is being referred to the Office of Data Management for processing into a patent.

/Derek L. Woods/
Derek L. Woods
Attorney
Office of Petitions

CC: JAMES P. HAO
TWO NORTH MARKET STREET
THIRD FLOOR
SAN JOSE, CA 95113

SPE RESPONSE FOR CERTIFICATE OF CORRECTION

Paper No.: _____

DATE : 10-05-09

TO SPE OF : ART UNIT 1646

SUBJECT : Request for Certificate of Correction for Appl. No.: 11/411361 Patent No.: 7470662

Please respond to this request for a certificate of correction within 7 days.

FOR IFW FILES:

Please review the requested changes/corrections as shown in the **COCIN** document(s) in the IFW application image. No new matter should be introduced, nor should the scope or meaning of the claims be changed.

Please complete the response (see below) and forward the completed response to scanning using document code **COCX**.

FOR PAPER FILES:

Please review the requested changes/corrections as shown in the attached certificate of correction. Please complete this form (see below) and forward it with the file to:

Certificates of Correction Branch (CofC)
Randolph Square – 9D10-A
Palm Location 7580

Angela Green
Certificates of Correction Branch
703-756-1814

Thank You For Your Assistance

The request for issuing the above-identified correction(s) is hereby:
Note your decision on the appropriate box.

☑ **Approved**	All changes apply.
☐ **Approved In Part**	Specify below which changes **do not** apply.
☐ **Denied**	State the reasons for denial below.

Comments: _____

_____

_____

_____

_____

Gary B. Nickol — SPE
1646 — Art Unit

UNITED STATES PATENT AND TRADEMARK OFFICE

UNITED STATES DEPARTMENT OF COMMERCE
United States Patent and Trademark Office
Address: COMMISSIONER FOR PATENTS
P.O. Box 1450
Alexandria, Virginia 22313-1450
www.uspto.gov

PVF -- APPLE INC.
c/o PARK, VAUGHAN & FLEMING LLP
2820 FIFTH STREET
DAVIS, CA 95618-7759

Mail Date: 04/21/2010

Applicant	: Dean Reece	: DECISION ON REQUEST FOR
Patent Number	: 7640440	: RECALCULATION of PATENT
Issue Date	: 12/29/2009	: TERM ADJUSTMENT IN VIEW
Appliction No	: 11/411,363	: OF WYETH AND NOTICE OF INTENT TO
Filed	: 04/25/2006	: ISSUE CERTIFICATE OF CORRECTION
		:

The Request for Recalculation is **GRANTED** to the extent indicated.

The patent term adjustment has been determined to be **774** days. The USPTO will *sua sponte* issue a certificate of correction reflecting the amount of PTA days determined by the recalculation.

Prior to the issuance of the certificate of correction, the USPTO will afford patentee an opportunity to be heard and request reconsideration. Accordingly, patentee has **one month or thirty (30) days**, whichever is longer, to file a request for reconsideration of this patent term adjustment calculation. See 35 U.S.C. 154(b)(3)(B)(ii) and 37 CFR 1.322(a)(4). No extensions of time will be granted under 37 CFR 1.136.

Patentee should use document code PET.OP if electronically filing a request for reconsideration of this patent term adjustment calculation. The patentee must also include the information required by 37 CFR 1.705(b)(2) and the fee required by 37 CFR 1.18(e). If patentee does not file a timely request for reconsideration of this patent term adjustment calculation including the information required by 37 CFR 1.705(b)(2) and the fee required by 37 CFR 1.18(e), the USPTO will issue a certificate of correction reflecting the PTA determination noted above.

Patentee should be aware that in order to preserve the right to review in the United States District Court for the District of Columbia of the USPTO patent term adjustment determination, patentee must ensure that he or she also take the steps required under 35 U.S.C. 154(b)(4)(A) in a timely manner. Nothing in the request for recalculation should be construed as providing an alternative time frame for commencing a civil action under 35 U.S.C. 154(b)(4)(A).

Any questions concerning this decision should be directed to the Office of Patent Legal Administration at 571-272-7702.

UNITED STATES PATENT AND TRADEMARK OFFICE

UNITED STATES DEPARTMENT OF COMMERCE
United States Patent and Trademark Office
Address: COMMISSIONER FOR PATENTS
P.O. Box 1450
Alexandria, Virginia 22313-1450
www.uspto.gov

Richard L. Bridge
ARMSTRONG TEASDALE LLP
7700 Forsyth Boulevard
Suite 1800
St. Louis, MO 63105

Mail Date: 07/15/2010

Applicant	: Bernard J. Kemper	: DECISION ON REQUEST FOR
Patent Number	: 7650896	: RECALCULATION of PATENT
Issue Date	: 01/26/2010	: TERM ADJUSTMENT IN VIEW
Application No	: 11/411,368	: OF WYETH AND NOTICE OF INTENT TO
Filed	: 04/26/2006	: ISSUE CERTIFICATE OF CORRECTION
		:

The Request for Recalculation is **GRANTED** to the extent indicated.

The patent term adjustment has been determined to be **446** days. The USPTO will *sua sponte* issue a certificate of correction reflecting the amount of PTA days determined by the recalculation.

Prior to the issuance of the certificate of correction, the USPTO will afford patentee an opportunity to be heard and request reconsideration. Accordingly, patentee has **one month or thirty (30) days**, whichever is longer, to file a request for reconsideration of this patent term adjustment calculation. See 35 U.S.C. 154(b)(3)(B)(ii) and 37 CFR 1.322(a)(4). No extensions of time will be granted under 37 CFR 1.136.

Patentee should use document code PET.OP if electronically filing a request for reconsideration of this patent term adjustment calculation. The patentee must also include the information required by 37 CFR 1.705(b)(2) and the fee required by 37 CFR 1.18(e). If patentee does not file a timely request for reconsideration of this patent term adjustment calculation including the information required by 37 CFR 1.705(b)(2) and the fee required by 37 CFR 1.18(e), the USPTO will issue a certificate of correction reflecting the PTA determination noted above.

Patentee should be aware that in order to preserve the right to review in the United States District Court for the District of Columbia of the USPTO patent term adjustment determination, patentee must ensure that he or she also take the steps required under 35 U.S.C. 154(b)(4)(A) in a timely manner. Nothing in the request for recalculation should be construed as providing an alternative time frame for commencing a civil action under 35 U.S.C. 154(b)(4)(A).

Any questions concerning this decision should be directed to the Office of Patent Legal Administration at 571-272-7702.

UNITED STATES PATENT AND TRADEMARK OFFICE

Commissioner for Patents
United States Patent and Trademark Office
P.O. Box 1450
Alexandria, VA 22313-1450
www.uspto.gov

COPY MAILED

AUG 30 2006

OFFICE OF PETITIONS

CANCELLED

COPY MAILED

AUG 29 2006

OFFICE OF PETITIONS

LAW OFFICES OF ANDREW Y. SCHROEDER
500 SOUTH BROADWAY
SUITE 222
SANTA MARIA CA 93454

In re Application of :
William T. Rodgers :
Application No. 11/411,373 : DECISION ON PETITION
Filed: April 25, 2006 : TO MAKE SPECIAL UNDER
Attorney Docket No. ISQ 003 WRX : 37 CFR 1.102(c)(1)
:

This is a decision on the petition under 37 CFR 1.102(c)(1), filed April 25, 2006, to make the above-identified application special based on applicant's age as set forth in M.P.E.P. § 708.02, Section IV.

The petition is **GRANTED**.

A grantable petition to make an application special under 37 CFR 1.102(c)(1) and MPEP § 708.02, Section IV: Applicant's Age, must be accompanied by evidence showing that at least one of the applicants is 65 years of age, or more, such as a birth certificate or a statement by applicant. No fee is required.

The instant petition includes a copy of the applicant's driver's license showing proof of age over 65 years of age. Accordingly, the above-identified application has been accorded "special" status.

Telephone inquiries concerning this decision should be directed to Charles Smoot at 571-272-3299.

All other inquiries concerning either the examination or status of the application should be directed to the Technology Center.

The application is being forwarded to the Technology Center Art Unit 3643 for action on the merits commensurate with this decision.

Frances Hicks for

David Bucci
Petitions Examiner
Office of Petitions

UNITED STATES PATENT AND TRADEMARK OFFICE

Commissioner for Patents
United States Patent and Trademark Office
P.O. Box 1450
Alexandria, VA 22313-1450
www.uspto.gov

LISA B. VACCARELLI
TYCO ELECTRONICS CORPORATION
SUITE 140
4550 NEW LINDEN HILL ROAD
WILMINGTON DE 19808-2952

COPY MAILED

JUN 0 9 2008

In re Application of	:	
Pepe et al.	:	
Application No. 11/411380	:	DECISION ON PETITION
Filed: 04/26/2006	:	
Attorney Docket No. E-TO-00090 (20958-94)	:	

This is a decision on the petition under 37 CFR 1.182, filed, April 18, 2008, to change the name of inventor "Linda Ellen Bert" to -- Linda Ellen Shields --.

The petition is **GRANTED**.

Office records have been updated to reflect the inventor's change of name. A corrected Filing Receipt, which reflects the inventor's change of name, accompanies this decision on petition.

The fee for a petition under 37 CFR 1.182 is $400.00. On April 18, 2008, $130.00 was paid. The balance due of $270.00 will be charged to counsel's deposit account as authorized in the petition.

It is noted that the supplemental application data sheet (ADS) filed on April 18, 2008, is unsigned. In accordance with 37 CFR 1.33 and 10.18, a signature of the applicant or representative is required. Petitioner may wish to consider filing a properly-signed supplemental ADS.

Any questions concerning this matter may be directed to Senior Petitions Attorney Douglas I. Wood at (571) 272-3231. Any questions concerning the examination procedures or status of the application should be directed to the Technology Center.

This application is being referred to Technology Center AU 2833 for further processing.

DWood

Douglas I. Wood
Senior Petitions Attorney
Office of Petitions.

ATTACHMENT: Corrected Filing Receipt

UNITED STATES PATENT AND TRADEMARK OFFICE

UNITED STATES DEPARTMENT OF COMMERCE
United States Patent and Trademark Office
Address: COMMISSIONER FOR PATENTS
P.O. Box 1450
Alexandria, Virginia 22313-1450
www.uspto.gov

APPLICATION NUMBER	FILING or 371(c) DATE	GRP ART UNIT	FIL FEE REC'D	ATTY.DOCKET.NO	TOT CLAIMS	IND CLAIMS
11/411,380	04/26/2006	2833	1300	E-TO-00090 (20958-94)	20	2

CONFIRMATION NO. 5895

CORRECTED FILING RECEIPT

Lisa B. Vaccarelli
Tyco Electronics Corporation
Suite 140
4550 New Linden Hill Road
Wilmington, DE 19808-2952

Date Mailed: 06/09/2008

Receipt is acknowledged of this non-provisional patent application. The application will be taken up for examination in due course. Applicant will be notified as to the results of the examination. Any correspondence concerning the application must include the following identification information: the U.S. APPLICATION NUMBER, FILING DATE, NAME OF APPLICANT, and TITLE OF INVENTION. Fees transmitted by check or draft are subject to collection. Please verify the accuracy of the data presented on this receipt. **If an error is noted on this Filing Receipt, please submit a written request for a Filing Receipt Correction. Please provide a copy of this Filing Receipt with the changes noted thereon. If you received a "Notice to File Missing Parts" for this application, please submit any corrections to this Filing Receipt with your reply to the Notice. When the USPTO processes the reply to the Notice, the USPTO will generate another Filing Receipt incorporating the requested corrections**

Applicant(s)

Paul John Pepe, Clemmon, NC;
Linda Ellen Shields, Camp Hill, PA;
Ned Sigmon, Mooresville, NC;

Assignment For Published Patent Application

TYCO ELECTRONICS CORPORATION

Power of Attorney:

Helen Wolstoncroft--32806
Robert Kapalka--34198
Driscoll Nina--34685
Dean Small--34730
Brian Oakes--41467
Bruce Atkins--43476
Evan Sotiriou--46247
Jay Hoette--50666
Lisa Vaccarelli--52470

Domestic Priority data as claimed by applicant

Foreign Applications

If Required, Foreign Filing License Granted: 05/26/2006

The country code and number of your priority application, to be used for filing abroad under the Paris Convention, is **US 11/411,380**

Projected Publication Date: Not Applicable

Non-Publication Request: No

Early Publication Request: No

Title

ELECTRICAL CONNECTOR HAVING CONTACT PLATES

Preliminary Class

439

PROTECTING YOUR INVENTION OUTSIDE THE UNITED STATES

Since the rights granted by a U.S. patent extend only throughout the territory of the United States and have no effect in a foreign country, an inventor who wishes patent protection in another country must apply for a patent in a specific country or in regional patent offices. Applicants may wish to consider the filing of an international application under the Patent Cooperation Treaty (PCT). An international (PCT) application generally has the same effect as a regular national patent application in each PCT-member country. The PCT process **simplifies** the filing of patent applications on the same invention in member countries, but **does not result** in a grant of "an international patent" and does not eliminate the need of applicants to file additional documents and fees in countries where patent protection is desired.

Almost every country has its own patent law, and a person desiring a patent in a particular country must make an application for patent in that country in accordance with its particular laws. Since the laws of many countries differ in various respects from the patent law of the United States, applicants are advised to seek guidance from specific foreign countries to ensure that patent rights are not lost prematurely.

Applicants also are advised that in the case of inventions made in the United States, the Director of the USPTO must issue a license before applicants can apply for a patent in a foreign country. The filing of a U.S. patent application serves as a request for a foreign filing license. The application's filing receipt contains further information and guidance as to the status of applicant's license for foreign filing.

Applicants may wish to consult the USPTO booklet, "General Information Concerning Patents" (specifically, the section entitled "Treaties and Foreign Patents") for more information on timeframes and deadlines for filing foreign patent applications. The guide is available either by contacting the USPTO Contact Center at 800-786-9199, or it can be viewed on the USPTO website at http://www.uspto.gov/web/offices/pac/doc/general/index.html.

For information on preventing theft of your intellectual property (patents, trademarks and copyrights), you may wish to consult the U.S. Government website, http://www.stopfakes.gov. Part of a Department of Commerce initiative, this website includes self-help "toolkits" giving innovators guidance on how to protect intellectual property in specific countries such as China, Korea and Mexico. For questions regarding patent enforcement issues, applicants may call the U.S. Government hotline at 1-866-999-HALT (1-866-999-4158).

LICENSE FOR FOREIGN FILING UNDER

Title 35, United States Code, Section 184

Title 37, Code of Federal Regulations, 5.11 & 5.15

GRANTED

The applicant has been granted a license under 35 U.S.C. 184, if the phrase "IF REQUIRED, FOREIGN FILING LICENSE GRANTED" followed by a date appears on this form. Such licenses are issued in all applications where the conditions for issuance of a license have been met, regardless of whether or not a license may be required as

set forth in 37 CFR 5.15. The scope and limitations of this license are set forth in 37 CFR 5.15(a) unless an earlier license has been issued under 37 CFR 5.15(b). The license is subject to revocation upon written notification. The date indicated is the effective date of the license, unless an earlier license of similar scope has been granted under 37 CFR 5.13 or 5.14.

This license is to be retained by the licensee and may be used at any time on or after the effective date thereof unless it is revoked. This license is automatically transferred to any related applications(s) filed under 37 CFR 1.53(d). This license is not retroactive.

The grant of a license does not in any way lessen the responsibility of a licensee for the security of the subject matter as imposed by any Government contract or the provisions of existing laws relating to espionage and the national security or the export of technical data. Licensees should apprise themselves of current regulations especially with respect to certain countries, of other agencies, particularly the Office of Defense Trade Controls, Department of State (with respect to Arms, Munitions and Implements of War (22 CFR 121-128)); the Bureau of Industry and Security, Department of Commerce (15 CFR parts 730-774); the Office of Foreign AssetsControl, Department of Treasury (31 CFR Parts 500+) and the Department of Energy.

NOT GRANTED

No license under 35 U.S.C. 184 has been granted at this time, if the phrase "IF REQUIRED, FOREIGN FILING LICENSE GRANTED" DOES NOT appear on this form. Applicant may still petition for a license under 37 CFR 5.12, if a license is desired before the expiration of 6 months from the filing date of the application. If 6 months has lapsed from the filing date of this application and the licensee has not received any indication of a secrecy order under 35 U.S.C. 181, the licensee may foreign file the application pursuant to 37 CFR 5.15(b).

SPE RESPONSE FOR CERTIFICATE OF CORRECTION

Paper No.: _____

DATE : 02/24/10

TO SPE OF : ART UNIT 3721

SUBJECT : Request for Certificate of Correction for Appl. No.: 11411389 Patent No.: 7546939

Please respond to this request for a certificate of correction within 7 days.

FOR IFW FILES:

Please review the requested changes/corrections as shown in the **COCIN** document(s) in the IFW application image. No new matter should be introduced, nor should the scope or meaning of the claims be changed.

Please complete the response (see below) and forward the completed response to scanning using document code **COCX**.

FOR PAPER FILES:

Please review the requested changes/corrections as shown in the attached certificate of correction. Please complete this form (see below) and forward it with the file to:

Certificates of Correction Branch (C of C)
Randolph Square 9D40-D
Palm Location 7580

You can fax the Directors/SPE response to 571-270-9990

Lamonte Newsome
Certificates of Correction Branch
703-756-1574

Thank You For Your Assistance

The request for issuing the above-identified correction(s) is hereby:
Note your decision on the appropriate box.

(x) **Approved**	**All** changes apply.
☐ **Approved in Part**	Specify below which changes **do not** apply.
☐ **Denied**	State the reasons for denial below.

Comments: Approved.

SPE

3721
Art Unit

UNITED STATES PATENT AND TRADEMARK OFFICE

Commissioner for Patents
United States Patent and Trademark Office
P.O. Box 1450
Alexandria, VA 22313-1450
www.uspto.gov

FAY KAPLUN & MARCIN, LLP
150 BROADWAY, SUITE 702
NEW YORK NY 10038

MAILED

APR 26 2010

OFFICE OF PETITIONS

Patent No. 7,546,939
Issued: June 16, 2009
Application No. 11/411,389
Filed: April 25, 2006
Attorney Docket No. 10121/01027

: DECISION GRANTING PETITION
: UNDER 37 CFR 1.78(a)(3) AND
: REQUEST FOR CERTIFICATE

This is a decision on the petition, filed February 19, 2010, which is being treated as a petition under 37 CFR 1.78(a)(3), seeking to add a claim for priority under 35 U.S.C. § 120 to the prior-filed nonprovisional applications, by way of a certificate of correction.

The petition is **GRANTED**.

A review of the file record fails to disclose that a claim for the benefit of priority to the above-noted, prior-filed nonprovisional applications was made within the time period set forth in 37 CFR 1.78(a)(2)(ii) and further failed to include a proper reference to the prior-filed application as required by 37 CFR 1.78(a)(2)(i) and 1.78(a)(2)(iii).

The instant application was filed April 25, 2006. Therefore, since this application was filed after November 29, 2000, a petition under 37 CFR 1.78(a)(3), along with submission of a Certificate of Correction, is the appropriate avenue of relief to accept a late claim for the benefit of priority to a prior-filed nonprovisional application after issuance of the application into a patent. *See* MPEP 1481.

A petition for acceptance of a claim for late priority under 37 CFR 1.78(a)(3) must be accompanied by:

(1) the reference required by 35 U.S.C. § 120 and 37 CFR 1.78(a)(2)(i) of the prior-filed application, unless previously submitted;

(2) the surcharge set forth in § 1.17(t); and

(3) a statement that the entire delay between the date the claim as due under 37 CFR 1.78(a)(2)(ii) and the date the claim was filed was unintentional. The Director may require additional information where there is a question whether the delay was unintentional.

As the petition for acceptance of an unintentionally delayed claim for the benefit of priority under 35 U.S.C. § 120 to the prior-filed nonprovisional applications satisfies the conditions of 37 CFR 1.78(a)(3), the petition is granted.

On March 30, 2010 a Certificate of Correction was issued.

A corrected Filing Receipt, which includes the priority claim to the prior-filed nonprovisional applications, accompanies this decision on petition.

Any inquiries concerning this decision may be directed to Joan Olszewski at (571) 272-7751.

/Liana Walsh/
Liana Walsh
Petitions Examiner
Office of Petitions

ATTACHMENT: Corrected Filing Receipt

UNITED STATES PATENT AND TRADEMARK OFFICE

UNITED STATES DEPARTMENT OF COMMERCE
United States Patent and Trademark Office
Address: COMMISSIONER FOR PATENTS
P.O. Box 1450
Alexandria, Virginia 22313-1450
www.uspto.gov

APPLICATION NUMBER	FILING or 371(c) DATE	GRP ART UNIT	FIL FEE REC'D	ATTY.DOCKET.NO	TOT CLAIMS	IND CLAIMS
11/411,389	04/25/2006	3721	1500	10121/01027	11	4

CONFIRMATION NO. 5889

CORRECTED FILING RECEIPT

30636
FAY KAPLUN & MARCIN, LLP
150 BROADWAY, SUITE 702
NEW YORK, NY 10038

Date Mailed: 04/26/2010

Receipt is acknowledged of this non-provisional patent application. The application will be taken up for examination in due course. Applicant will be notified as to the results of the examination. Any correspondence concerning the application must include the following identification information: the U.S. APPLICATION NUMBER, FILING DATE, NAME OF APPLICANT, and TITLE OF INVENTION. Fees transmitted by check or draft are subject to collection. Please verify the accuracy of the data presented on this receipt. **If an error is noted on this Filing Receipt, please submit a written request for a Filing Receipt Correction. Please provide a copy of this Filing Receipt with the changes noted thereon. If you received a "Notice to File Missing Parts" for this application, please submit any corrections to this Filing Receipt with your reply to the Notice. When the USPTO processes the reply to the Notice, the USPTO will generate another Filing Receipt incorporating the requested corrections**

Applicant(s)

Ronald D. Adams, Holliston, MA;
Roy H. Sullivan III, Millville, MA;
George A. Nunez, Miami, FL;
Lauren O. Main, Somerset, MI;
Peter K. Kratsch, Sunrise, FL;
Jurgen A. Kortenbach, Miami Springs, FL;
Matt Solar, Cooper City, FL;
Gerhard F. Buess, Tubingen-Bebenhausen, GERMANY;
Marc O. Schurr, Tubingen, GERMANY;

Assignment For Published Patent Application

Boston Scientific Scimed, Inc.

Power of Attorney: The patent practitioners associated with Customer Number 30636

Domestic Priority data as claimed by applicant

This application is a CON of 10/251,192 09/19/2002 PAT 7,059,331
which is a DIV of 10/055,306 01/23/2002 PAT 6,478,210
which is a CON of 09/813,944 03/22/2001 PAT 6,343,731
which is a CON of 09/694,894 10/25/2000 PAT 6,241,140
which is a CON of 09/316,674 05/21/1999 PAT 6,179,195
which is a DIV of 09/100,393 06/19/1998 PAT 6,126,058

Foreign Applications

If Required, Foreign Filing License Granted: 05/19/2006

The country code and number of your priority application, to be used for filing abroad under the Paris Convention, is **US 11/411,389**

Projected Publication Date: Not Applicable

Non-Publication Request: No

Early Publication Request: No
Title

METHOD AND DEVICE FOR FULL THICKNESS RESECTIONING OF AN ORGAN

Preliminary Class

227

PROTECTING YOUR INVENTION OUTSIDE THE UNITED STATES

Since the rights granted by a U.S. patent extend only throughout the territory of the United States and have no effect in a foreign country, an inventor who wishes patent protection in another country must apply for a patent in a specific country or in regional patent offices. Applicants may wish to consider the filing of an international application under the Patent Cooperation Treaty (PCT). An international (PCT) application generally has the same effect as a regular national patent application in each PCT-member country. The PCT process **simplifies** the filing of patent applications on the same invention in member countries, but **does not result** in a grant of "an international patent" and does not eliminate the need of applicants to file additional documents and fees in countries where patent protection is desired.

Almost every country has its own patent law, and a person desiring a patent in a particular country must make an application for patent in that country in accordance with its particular laws. Since the laws of many countries differ in various respects from the patent law of the United States, applicants are advised to seek guidance from specific foreign countries to ensure that patent rights are not lost prematurely.

Applicants also are advised that in the case of inventions made in the United States, the Director of the USPTO must issue a license before applicants can apply for a patent in a foreign country. The filing of a U.S. patent application serves as a request for a foreign filing license. The application's filing receipt contains further information and guidance as to the status of applicant's license for foreign filing.

Applicants may wish to consult the USPTO booklet, "General Information Concerning Patents" (specifically, the section entitled "Treaties and Foreign Patents") for more information on timeframes and deadlines for filing foreign patent applications. The guide is available either by contacting the USPTO Contact Center at 800-786-9199, or it can be viewed on the USPTO website at http://www.uspto.gov/web/offices/pac/doc/general/index.html.

For information on preventing theft of your intellectual property (patents, trademarks and copyrights), you may wish to consult the U.S. Government website, http://www.stopfakes.gov. Part of a Department of Commerce initiative, this website includes self-help "toolkits" giving innovators guidance on how to protect intellectual property in specific countries such as China, Korea and Mexico. For questions regarding patent enforcement issues, applicants may call the U.S. Government hotline at 1-866-999-HALT (1-866-999-4158).

LICENSE FOR FOREIGN FILING UNDER

Title 35, United States Code, Section 184

Title 37, Code of Federal Regulations, 5.11 & 5.15

GRANTED

The applicant has been granted a license under 35 U.S.C. 184, if the phrase "IF REQUIRED, FOREIGN FILING LICENSE GRANTED" followed by a date appears on this form. Such licenses are issued in all applications where the conditions for issuance of a license have been met, regardless of whether or not a license may be required as set forth in 37 CFR 5.15. The scope and limitations of this license are set forth in 37 CFR 5.15(a) unless an earlier license has been issued under 37 CFR 5.15(b). The license is subject to revocation upon written notification. The date indicated is the effective date of the license, unless an earlier license of similar scope has been granted under 37 CFR 5.13 or 5.14.

This license is to be retained by the licensee and may be used at any time on or after the effective date thereof unless it is revoked. This license is automatically transferred to any related applications(s) filed under 37 CFR 1.53(d). This license is not retroactive.

The grant of a license does not in any way lessen the responsibility of a licensee for the security of the subject matter as imposed by any Government contract or the provisions of existing laws relating to espionage and the national security or the export of technical data. Licensees should apprise themselves of current regulations especially with respect to certain countries, of other agencies, particularly the Office of Defense Trade Controls, Department of State (with respect to Arms, Munitions and Implements of War (22 CFR 121-128)); the Bureau of Industry and Security, Department of Commerce (15 CFR parts 730-774); the Office of Foreign AssetsControl, Department of Treasury (31 CFR Parts 500+) and the Department of Energy.

NOT GRANTED

No license under 35 U.S.C. 184 has been granted at this time, if the phrase "IF REQUIRED, FOREIGN FILING LICENSE GRANTED" DOES NOT appear on this form. Applicant may still petition for a license under 37 CFR 5.12, if a license is desired before the expiration of 6 months from the filing date of the application. If 6 months has lapsed from the filing date of this application and the licensee has not received any indication of a secrecy order under 35 U.S.C. 181, the licensee may foreign file the application pursuant to 37 CFR 5.15(b).

UNITED STATES PATENT AND TRADEMARK OFFICE

Commissioner for Patents
United States Patent and Trademark Office
P.O. Box 1450
Alexandria, VA 22313-1450
www.uspto.gov

Orum & Roth LLC
53 W. Jackson Boulevard
Suite 1616
Chicago IL 60604-3606

COPY MAILED

OCT 18 2006

OFFICE OF PETITIONS

In re Application of :
TAKAHASHI :
Application No. 11/411,402 : DECISION ON PETITION
Filed: April 26, 2006 : TO WITHDRAW
Attorney Docket No. 14381 : FROM RECORD
:

This is a decision on the Request to Withdraw as attorney or agent of record under 37 C.F.R. § 1.36(b), filed July 16, 2006.

The request is **APPROVED**.

A grantable request to withdraw as attorney/agent of record must be signed by every attorney/agent seeking to withdraw or contain a clear indication that one attorney is signing on behalf of another/others. A request to withdraw will not be approved unless at least 30 (thirty) days would remain between the date of approval and the later of the expiration date of a time to file a response or the expiration date of the maximum time period which can be extended under 37 C.F.R. § 1.136(a).

The request was signed by Catherine L. Gemrich.

Catherine L. Gemrich has been withdrawn as attorney or agent of record; all other attorneys remain of record.

The correspondence address of record remains unchanged.

There is no outstanding Office action that requires a reply from the applicant.

Telephone inquiries concerning this decision should be directed to Patricia Volpe at 571-272-6825.

David Bucci
Petitions Examiner
Office of Petitions

cc: Catherine Gemrich
Steelcase Development Corporation
6100 East Paris Avenue
Caledonia, MI 49501

RECEIVED
CENTRAL FAX CENTER
JUL 16 2006

Status
25

PTO/SB/83 (01-06)
Approved for use through 12/31/2006. OMB 0651-0035
U.S. Patent and Trademark Office, U.S. DEPARTMENT OF COMMERCE
Under the Paperwork Reduction Act of 1995, no persons are required to respond to a collection of information unless it displays a valid OMB control number.

REQUEST FOR WITHDRAWAL AS ATTORNEY OR AGENT AND CHANGE OF CORRESPONDENCE ADDRESS

Application Number	11/411402
Filing Date	4/26/2006
First Named Inventor	Kokichi TAKAHASHI
Art Unit	
Examiner Name	
Attorney Docket Number	14381

To: Commissioner for Patents
P.O. Box 1450
Alexandria, VA 22313-1450

Please withdraw me as attorney or agent for the above identified patent application, and

- ☐ all the attorneys/agents of record.
- ☐ the attorneys/agents (with registration numbers) listed on the attached paper(s), or
- ☐ the attorneys/agents associated with Customer Number ☐

NOTE: This box can only be checked when the power of attorney of record in the application is to all the practitioners associated with a customer number.

The reasons for this request are: As of 20 July 2006, I will no longer be associated with the firm Orum & Roth LLC. Partner Keith H. Orum, Registration No. 33985, maintains responsibility for the case.

CORRESPONDENCE ADDRESS

1. ☑ The correspondence address is NOT affected by this withdrawal.
2. ☐ Change the correspondence address and direct all future correspondence to:

☐ The address associated with Customer Number: ☐

OR

☐ Firm or Individual Name	Orum & Roth LLC				
Address	53 W Jackson Blvd Ste 1616				
City	Chicago	State	IL	Zip	60604
Country	US				
Telephone	312 922 6262	Email	email@orumroth.com		
Signature	Catherine L. Gemaich				
Name	Catherine L. Gemrich	Registration No.	50473		
Date	16 July 2006	Telephone No.	312 922 6262		

NOTE: Withdrawal is effective when approved rather than when received. Unless there are at least 30 days between approval of withdrawal and the expiration date of a time period for response or possible extension period, the request to withdraw is normally disapproved.

This collection of information is required by 37 CFR 1.36. The information is required to obtain or retain a benefit by the public which is to file (and by the USPTO to process) an application. Confidentiality is governed by 35 U.S.C. 122 and 37 CFR 1.11 and 1.14. This collection is estimated to take 12 minutes to complete, including gathering, preparing, and submitting the completed application form to the USPTO. Time will vary depending upon the individual case. Any comments on the amount of time you require to complete this form and/or suggestions for reducing this burden, should be sent to the Chief Information Officer, U.S. Patent and Trademark Office, U.S. Department of Commerce, P.O. Box 1450, Alexandria, VA 22313-1450. DO NOT SEND FEES OR COMPLETED FORMS TO THIS ADDRESS. SEND TO: Commissioner for Patents, P.O. Box 1450, Alexandria, VA 22313-1450.

If you need assistance in completing the form, call 1-800-PTO-9199 and select option 2.

PTO/SB/92 (09-04)
Approved for use through 07/31/2006. OMB 0651-0031
Patent and Trademark Office; U.S. DEPARTMENT OF COMMERCE
Under the Paperwork Reduction Act of 1995, no persons are required to respond to a collection of information unless it contains a valid OMB control number.

Certificate of Mailing under 37 CFR 1.8

-Request for Withdrawal As Attorney for
US Application No. 11/411402
(Attorney Docket: 14381)

I hereby certify that this correspondence is being deposited with the United States Postal Service with sufficient postage as first class mail in an envelope addressed to:

Commissioner for Patents
P.O. Box 1450
Alexandria, VA 22313-1450

on 16 July 2006
Date

Signature

Elizabeth McAleese
Typed or printed name of person signing Certificate

Registration Number, if applicable

312 922 6262
Telephone Number

Note: Each paper must have its own certificate of mailing, or this certificate must identify each submitted paper.

This collection of information is required by 37 CFR 1.8. The information is required to obtain or retain a benefit by the public which is to file (and by the USPTO to process) an application. Confidentiality is governed by 35 U.S.C. 122 and 37 CFR 1.11 and 1.14. This collection is estimated to take 1.8 minutes to complete, including gathering, preparing, and submitting the completed application form to the USPTO. Time will vary depending upon the individual case. Any comments on the amount of time you require to complete this form and/or suggestions for reducing this burden, should be sent to the Chief Information Officer, U.S. Patent and Trademark Office, U.S. Department of Commerce, P.O. Box 1450, Alexandria, VA 22313-1450. DO NOT SEND FEES OR COMPLETED FORMS TO THIS ADDRESS. SEND TO: Commissioner for Patents, P.O. Box 1450, Alexandria, VA 22313-1450.

If you need assistance in completing the form, call 1-800-PTO-9199 and select option 2.

UNITED STATES PATENT AND TRADEMARK OFFICE

Commissioner for Patents
United States Patent and Trademark Office
P.O. Box 1450
Alexandria, VA 22313-1450
www.uspto.gov

MAILED

APR 12 2010

OFFICE OF PETITIONS

Ballard Spahr LLP
SUITE 1000
999 PEACHTREE STREET
ATLANTA GA 30309-3915

In re Patent No. 7,544,398 :
Issue Date: June 9, 2009 :
Application No. 11/411,425 : NOTICE
Filed: April 27, 2006 :
Attorney Docket No. 03291.0008U2 :

This is a notice regarding your request for acceptance of a fee deficiency submission under 37 CFR 1.28 filed February 16, 2010. On September 1, 1998, the Court of Appeals for the Federal Circuit held that 37 CFR 1.28(c) is the sole provision governing the time for correction of the erroneous payment of the issue fee as a small entity. **See DH Technology v. Synergystex International, Inc. 154 F.3d 1333, 47 USPQ2d 1865 (Fed. Cir. Sept. 1, 1998).**

The Office no longer investigates or rejects original or reissue applications under 37 CFR 1.56. **1098 Off. Gaz. Pat. Office 502 (January 3, 1989).** Therefore, nothing in this Notice is intended to imply that an investigation was done.

Your fee deficiency submission under 37 CFR 1.28 is hereby accepted. The petition is **GRANTED**.

This application is no longer entitled to small entity status. Accordingly, all future fees paid in this application must be paid at the large entity rate.

This file is being forwarded to Files Repository.

Telephone inquiries related to this decision should be directed to the Kimberly Inabinet at (571) 272-4618.

/Kimberly Inabinet/

Kimberly Inabinet
Petitions Examiner
Office of Petitions

UNITED STATES PATENT AND TRADEMARK OFFICE

COMMISSIONER FOR PATENTS
UNITED STATES PATENT AND TRADEMARK OFFICE
P.O. BOX 1450
ALEXANDRIA, VA 22313-1450
www.uspto.gov

COPY MAILED

MAR 28 2008

OFFICE OF PETITIONS

Rohm & Monsanto, PLC
12 Rathbone Place
Grosse Pointe MI 48230

In re Application of :
Lakshmanan, et al. : DECISION ON PETITION
Application No. 11/411,426 :
Filed: April 25, 2006 :
Dkt. No.: RM.MVB :

This is a decision on the petition to withdraw the holding of abandonment under 37 CFR 1.181, filed February 28, 2008.

The Notice of Abandonment, mailed January 14, 2008, states the application is abandoned for failure to timely submit a proper reply to the non-final Office action mailed July 5, 2007. The non-final Office action set a three month shortened statutory period of time for reply.

Petitioners assert that a response to the non-final Office action, including extension of time, was timely filed January 7, 2008. Petitioners further argue that a reply to the non-final Office action bore a certificate of mailing in accordance with 37 CFR 1.8.

The original responses referenced by petitioners have been located in the application file.

In view of the evidence thereof, the petition to withdraw the holding of abandonment is hereby **GRANTED**.

The Notice of Abandonment is hereby **VACATED** and the holding of abandonment is **WITHDRAWN**.

The application file is being forwarded to Technology Center 2800 for further processing.

Telephone inquiries concerning this matter may be directed to the undersigned at (571) 272-3205.

Alesia M. Brown
Petitions Attorney
Office of Petitions

UNITED STATES PATENT AND TRADEMARK OFFICE

UNITED STATES DEPARTMENT OF COMMERCE
United States Patent and Trademark Office
Address: COMMISSIONER FOR PATENTS
P.O. Box 1450
Alexandria, Virginia 22313-1450
www.uspto.gov

CHRISTIE, PARKER & HALE, LLP
PO BOX 7068
PASADENA, CA 91109-7068

Mail Date: 04/21/2010

Applicant	: Youngbae Sohn	: DECISION ON REQUEST FOR
Patent Number	: 7659014	: RECALCULATION of PATENT
Issue Date	: 02/09/2010	: TERM ADJUSTMENT IN VIEW
Appliction No	: 11/411,428	: OF WYETH AND NOTICE OF INTENT TO
Filed	: 04/25/2006	: ISSUE CERTIFICATE OF CORRECTION
		:

The Request for Recalculation is **GRANTED** to the extent indicated.

The patent term adjustment has been determined to be **917** days. The USPTO will *sua sponte* issue a certificate of correction reflecting the amount of PTA days determined by the recalculation.

Prior to the issuance of the certificate of correction, the USPTO will afford patentee an opportunity to be heard and request reconsideration. Accordingly, patentee has **one month or thirty (30) days**, whichever is longer, to file a request for reconsideration of this patent term adjustment calculation. See 35 U.S.C. 154(b)(3)(B)(ii) and 37 CFR 1.322(a)(4). No extensions of time will be granted under 37 CFR 1.136.

Patentee should use document code PET.OP if electronically filing a request for reconsideration of this patent term adjustment calculation. The patentee must also include the information required by 37 CFR 1.705(b)(2) and the fee required by 37 CFR 1.18(e). If patentee does not file a timely request for reconsideration of this patent term adjustment calculation including the information required by 37 CFR 1.705(b)(2) and the fee required by 37 CFR 1.18(e), the USPTO will issue a certificate of correction reflecting the PTA determination noted above.

Patentee should be aware that in order to preserve the right to review in the United States District Court for the District of Columbia of the USPTO patent term adjustment determination, patentee must ensure that he or she also take the steps required under 35 U.S.C. 154(b)(4)(A) in a timely manner. Nothing in the request for recalculation should be construed as providing an alternative time frame for commencing a civil action under 35 U.S.C. 154(b)(4)(A).

Any questions concerning this decision should be directed to the Office of Patent Legal Administration at 571-272-7702.

UNITED STATES PATENT AND TRADEMARK OFFICE

Commissioner for Patents
United States Patent and Trademark Office
P.O. Box 1450
Alexandria, VA 22313-1450
www.uspto.gov

COPY MAILED

AUG 14 2006

OFFICE OF PETITIONS

KNOBBE MARTENS OLSON & BEAR LLP
2040 MAIN STREET
FOURTEENTH FLOOR
IRVINE, CA 92614

In re Application of :
Matti Sallberg :
Application No.11/411,454 : DECISION GRANTING PETITION
Filed: April 26, 2006 :
Attorney Docket No. **TR1PEP.056C1** :

This is a decision on petition filed May 20, 2006, requesting that the above-identified application retain the presently accorded a filing date of April 26, 2006, with page 51 of the specification as part of the original disclosure.

On April 26, 2006, the above-identified application was filed. On May 10, 2006, the Office of Initial Patent Examination mailed a "Notice of Omitted Items in a Nonprovisional Application" (the "Notice"), stating that the application had been accorded a filing date of April 26, 2006, however, page 51 of the specification appeared to have been omitted. The Notice allowed a non-extendable two-month period for reply beginning from the mailing date of the Notice.

In response, on May 20, 2006, applicants filed the instant petition along with a copy of the Office date-stamped postcard acknowledging receipt of 56 pages of the specification, claims, and abstract on April 26, 2006, and a copy of page 51 of the specification.

Upon review of the record, page 51 of the specification has not been located among the application papers. However, the evidence is convincing that the application papers deposited April 26, 2006, included page 51, which was subsequently misplaced by the Office. Therefore, the application, including page 51 as described in the specification, was complete on filing and entitled to the presently accorded filing date of April 26, 2006.

Accordingly, the petition is granted; the Notice is vacated, accordingly. The petition fee of $400.00 will be refunded in due course.

The application file is being returned to the Office of Initial Patent Examination for further processing with the presently accorded filing date of April 26, 2006, using the 56 pages of specification filed on April 26, 2006

Any inquiries related to this decision should be directed to the undersigned at (571) 272-3222.

Kenya A. McLaughlin

Kenya A. McLaughlin
Petitions Attorney
Office of Petitions

UNITED STATES PATENT AND TRADEMARK OFFICE

UNITED STATES DEPARTMENT OF COMMERCE
United States Patent and Trademark Office
Address: COMMISSIONER FOR PATENTS
P.O. Box 1450
Alexandria, Virginia 22313-1450
www.uspto.gov

David W. Highet, VP & Chief IP Counsel
Becton, Dickinson and Company
1 Becton Drive
MC 110
Franklin Lakes, NJ 07417-1880

Mail Date: 04/21/2010

Applicant	: Paul C. DiCesare	: DECISION ON REQUEST FOR
Patent Number	: 7578975	: RECALCULATION of PATENT
Issue Date	: 08/25/2009	: TERM ADJUSTMENT IN VIEW
Appliction No	: 11/411,458	: OF WYETH AND NOTICE OF INTENT TO
Filed	: 04/26/2006	: ISSUE CERTIFICATE OF CORRECTION
		:

The Request for Recalculation is **GRANTED** to the extent indicated.

The patent term adjustment has been determined to be **613** days. The USPTO will *sua sponte* issue a certificate of correction reflecting the amount of PTA days determined by the recalculation.

Prior to the issuance of the certificate of correction, the USPTO will afford patentee an opportunity to be heard and request reconsideration. Accordingly, patentee has **one month or thirty (30) days**, whichever is longer, to file a request for reconsideration of this patent term adjustment calculation. See 35 U.S.C. 154(b)(3)(B)(ii) and 37 CFR 1.322(a)(4). No extensions of time will be granted under 37 CFR 1.136.

Patentee should use document code PET.OP if electronically filing a request for reconsideration of this patent term adjustment calculation. The patentee must also include the information required by 37 CFR 1.705(b)(2) and the fee required by 37 CFR 1.18(e). If patentee does not file a timely request for reconsideration of this patent term adjustment calculation including the information required by 37 CFR 1.705(b)(2) and the fee required by 37 CFR 1.18(e), the USPTO will issue a certificate of correction reflecting the PTA determination noted above.

Patentee should be aware that in order to preserve the right to review in the United States District Court for the District of Columbia of the USPTO patent term adjustment determination, patentee must ensure that he or she also take the steps required under 35 U.S.C. 154(b)(4)(A) in a timely manner. Nothing in the request for recalculation should be construed as providing an alternative time frame for commencing a civil action under 35 U.S.C. 154(b)(4)(A).

Any questions concerning this decision should be directed to the Office of Patent Legal Administration at 571-272-7702.

UNITED STATES PATENT AND TRADEMARK OFFICE

Commissioner for Patents
United States Patent and Trademark Office
P.O. Box 1450
Alexandria, VA 22313-1450
www.uspto.gov

AMGEN INC.
MAIL STOP 28-2-C
ONE AMGEN CENTER DRIVE
THOUSAND OAKS CA 91320-1799

COPY MAILED

NOV 0 6 2007

OFFICE OF PETITIONS

In re Application of :
Cindy W. Wu et al :
Application No. 11/411,464 : DECISION ON PETITION
Filed: April 25, 2006 :
Attorney Docket No. A-1002 :

This is a decision on the petition under 37 CFR 1.137(b), filed March 6, 2007, to revive the above-identified application.

The petition is **GRANTED.**

The application became abandoned for failure to reply in a timely manner to the Notice to File Missing Parts of Nonprovisional Application (Notice), mailed May 12, 2006, which required the submission of an executed oath or declaration, a $130 surcharge fee for its late filing, and a substitute computer readable form (CRF) copy of the Sequence Listing. The Notice set a period for reply of two (2) months from the mail date of the Notice. No extensions of time were obtained under the provisions of 37 CFR 1.136(a). Accordingly, the application became abandoned on July 13, 2006. A Notice of Abandonment was mailed on January 22, 2007.

The petition satisfies the requirements of 37 CFR 1.137(b) in that petitioner has supplied (1) the items required by the Notice of May 12, 2006, (2) the petition fee of $1,500, and (3) a proper statement of unintentional delay. Accordingly, the failure to timely reply to the Notice of May 12, 2006 is accepted as being unintentionally delayed.

The file references mailing of correspondence to two different customer numbers. In view of this ambiguity in the instructions given, all future correspondence will be mailed to the above address. If it is desired that correspondence relating to this application be mailed to a different address, a change of address should be promptly filed.

This application is being referred to the Office of Initial Patent Examination for further processing in accordance with this decision.

Telephone inquiries concerning this decision should be directed to the undersigned at (571) 272-3218.

Frances Hicks
Petitions Examiner
Office of Petitions

UNITED STATES PATENT AND TRADEMARK OFFICE

Commissioner for Patents
United States Patent and Trademark Office
P.O. Box 1450
Alexandria, VA 22313-1450
www.uspto.gov

WILLIAM HAMROCK
50 WINTER HARBOR ROAD
KENNEBUNKPORT ME 04046

COPY MAILED

JUL 21 2008

OFFICE OF PETITIONS

In re Application of :
Reinaldo A. FAGET-MORA :
Application No. 11/411,479 : DECISION ON PETITION
Filed: April 26, 2006 :
Attorney Docket No. **MORA-1** :

This is a decision on the petition under the unintentional provisions of 37 CFR 1.137(b), filed May 05, 2008 and re-submitted on May 22, 2008, to revive the above-identified application.

The petition is **GRANTED**.

The application became abandoned for failure to reply in a timely manner to the Notice to File Missing Parts of Nonprovisional Application (Notice), mailed May 23, 2006. The Notice set a period for reply of two (2) months from the mail date of the Notice. No extensions of time under the provisions of 37 CFR 1.136(a) were obtained. Accordingly, the application became abandoned on July 24, 2006.

The petition satisfies the requirements of 37 CFR 1.137(b) in that petitioner has supplied (1) the reply in the form of the required specification, (2) the petition fee of $770, and (3) a proper statement of unintentional delay. Accordingly, the reply to the Notice to File Missing Parts of Nonprovisional Application of May 23, 2006 is accepted as having been unintentionally delayed.

Telephone inquiries concerning this decision should be directed to Tredelle Jackson at (571) 272-2783.

This application is being referred to the Office of Patent Application Processing.

/David Bucci/
Petitions Examiner
Office of Petitions

UNITED STATES PATENT AND TRADEMARK OFFICE

Commissioner for Patents
United States Patent and Trademark Office
P.O. Box 1450
Alexandria, VA 22313-1450
www.uspto.gov

COPY MAILED

APR 24 2009

OFFICE OF PETITIONS

ALLEN D. DARDEN
P.O. BOX 4412
BATON ROUGE LA 70821

In re Application of	:	
Gary Chouest	:	
Application No. 11/411,489	:	DECISION ON PETITION
Filed: April 25, 2006	:	
Attorney Docket No. 21721-2	:	

This is a decision on the petition under the unintentional provisions of 37 CFR 1.137(b), filed February 5, 2009, to revive the above-identified application.

The petition is **GRANTED**.

The application became abandoned for failure to reply in a timely manner to the Restriction Requirement, mailed June 5, 2008, which set a shortened statutory period for reply of one (1) month or thirty (30) days (whichever is later). No extensions of time under the provisions of 37 CFR 1.136(a) were obtained. Accordingly, the application became abandoned on July 6, 2008. The Notice of Abandonment was mailed December 31, 2008.

The petition satisfies the requirements of 37 CFR 1.137(b) in that petitioner has supplied (1) the reply in the form of an election, (2) the petition fee of $1,620, and (3) a proper statement of unintentional delay.

Telephone inquiries concerning this decision should be directed to Terri Williams at (571)272-2991.

This application is being referred to Technology Center AU 3617 for appropriate action by the Examiner in the normal course of business on the reply received

Chris Bottorff
Petitions Examiner
Office of Petitions

UNITED STATES PATENT AND TRADEMARK OFFICE

Commissioner for Patents
United States Patent and Trademark Office
P.O. Box 1450
Alexandria, VA 22313-1450
www.uspto.gov

MAILED

JUN 29 2010

OFFICE OF PETITIONS

HOWSON & HOWSON LLP / WYETH LLC
501 OFFICE CENTER DRIVE
SUITE 210
FORT WASHINGTON PA 19034

In re Application of :
Nagi, et al. :
Application No. 11/411,523 : ON APPLICATION FOR
Filed: April 26, 2006 : PATENT TERM ADJUSTMENT
Atty Docket No. AM-101845

This is in response to the "REQUEST FOR RECONSIDERATION OF PATENT TERM ADJUSTMENT UNDER 37 C.F.R. § 1.705(b)" filed April 1, 2010. Applicants submit that the patent term adjustment to be indicated on the patent is five hundred and twenty-nine (529) days, not three hundred and seventy-one (371) days as calculated by the Office as of the mailing of the initial determination of patent term adjustment. Applicants request this correction solely on the basis that the Office will take in excess of three years to issue this patent.

As the instant application for patent term adjustment requests reconsideration of the patent term adjustment as it relates to the Office's failure to issue the patent within 3 years of the filing date, the application for patent term adjustment under 37 CFR 1.705(b) is **DISMISSED as PREMATURE**.

Knowledge of the actual date the patent issues is required to calculate the amount, if any, of additional patent term patentee is entitled to for Office failure to issue the patent within 3 years. See § 1.702(b). (This is true even where a request for continued examination (RCE) was filed). The computer will not undertake the § 1.702(b) calculation until the actual date of issuance of the patent has been determined. Likewise, the computer will not calculate any further Office delay under § 1.702(a)(4) or applicant delay under § 1.704(c)(10) until the actual date of issuance of the patent has been determined. As such, the Office can not make a determination on the correctness of the patent term adjustment until the patent has issued.

Requesting reconsideration of the patent term adjustment to be indicated on the patent under 37 CFR 1.705(b) based on the initial determination of patent term adjustment and a projected issuance date of the patent (or even the filing date of the request for continued examination) is premature. Accordingly, it is appropriate to dismiss as premature such a request.

Rather than file an application for patent term adjustment under 37 CFR 1.705(b) contesting the 37 CFR 1.702(b) calculation at the time of the mailing of the notice of allowance, applicant is advised that they may wait until the time of the issuance of the patent and file a request for reconsideration of the patent term adjustment pursuant to 37 CFR 1.705(d). As the USPTO does not calculate the amount of time earned pursuant to 37 CFR 1.702(b) until the time of the issuance of the patent, the Office will consider any request for reconsideration of the patent term adjustment due to an error in the calculation of 37 CFR 1.702(b) to be timely if the request for reconsideration is filed within two months of the issuance of the patent. However, as to all other bases for contesting the initial determination of patent term adjustment received with the notice of allowance, applicant must timely file an application for patent term adjustment prior to the payment of the issue fee[1].

It is noted that any period of adjustment will be entered in light of 35 U.S.C. 154(B) GUARANTEE OF NO MORE THAN 3-YEAR APPLICATION PENDENCY, which provides that:

> Subject to the limitations under paragraph (2), if the issue of an original patent is delayed due to the failure of the United States Patent and Trademark Office to issue a patent within 3 years after the actual filing date of the application in the United States, not including —

---

[1] For example, if applicant disputes both the calculation of patent term adjustment under 37 CFR 1.702(a)(1) for Office failure to mail a first Office action or notice of allowance not later than fourteen months after the date on which the application was filed and under 37 CFR 1.702(b) for Office failure to issue a patent within three years of the actual filing date of the application, then applicant must still timely file an application for patent term adjustment prior to the payment of the issue fee to contest the calculation of Office delay in issuing a first Office action or notice of allowance. See 37 CFR 1.705(b) and 35 U.S.C. 154(b)(3)(B). A dispute as to the calculation of the §1.702(a)(1) period raised on request for reconsideration of patent term adjustment under 37 CFR 1.705(d) will be dismissed as untimely filed.

(i) any time consumed by continued examination of the application requested by the applicant under section 132(b);

It is further noted that a Request for Continued Examination (RCE) was filed in this application on October 1, 2009.

The Office is in receipt of the $200.00 for the fee set forth in 37 CFR 1.18(e) for consideration of the application for patent term adjustment under 37 CFR 1.705(b).

Any request for reconsideration of the patent term adjustment indicated on the patent must be timely filed within 2 months after issuance pursuant to 37 CFR 1.705(d) and must include payment of the required fee under 37 CFR 1.18(e).

The Office of Data Management has been advised of this decision. This application is being referred to the Office of Data Management for issuance of the patent.

Telephone inquiries specific to this decision should be directed to the undersigned (571) 272-3222.

/Kenya A. McLaughlin/

Kenya A. McLaughlin
Senior Petitions Attorney
Office of Petitions

UNITED STATES PATENT AND TRADEMARK OFFICE

UNITED STATES DEPARTMENT OF COMMERCE
United States Patent and Trademark Office
Address: COMMISSIONER FOR PATENTS
P.O. Box 1450
Alexandria, Virginia 22313-1450
www.uspto.gov

FISH & RICHARDSON PC
P.O. BOX 1022
MINNEAPOLIS, MN 55440-1022

Mail Date: 04/26/2010

Applicant	: Ye Yang	: DECISION ON REQUEST FOR
Patent Number	: 7616303	: RECALCULATION of PATENT
Issue Date	: 11/10/2009	: TERM ADJUSTMENT IN VIEW
Application No	: 11/411,538	: OF WYETH AND NOTICE OF INTENT TO
Filed	: 04/25/2006	: ISSUE CERTIFICATE OF CORRECTION
		:

The Request for Recalculation is **GRANTED** to the extent indicated.

The patent term adjustment has been determined to be **474** days. The USPTO will *sua sponte* issue a certificate of correction reflecting the amount of PTA days determined by the recalculation.

Prior to the issuance of the certificate of correction, the USPTO will afford patentee an opportunity to be heard and request reconsideration. Accordingly, patentee has **one month or thirty (30) days**, whichever is longer, to file a request for reconsideration of this patent term adjustment calculation. See 35 U.S.C. 154(b)(3)(B)(ii) and 37 CFR 1.322(a)(4). No extensions of time will be granted under 37 CFR 1.136.

Patentee should use document code PET.OP if electronically filing a request for reconsideration of this patent term adjustment calculation. The patentee must also include the information required by 37 CFR 1.705(b)(2) and the fee required by 37 CFR 1.18(e). If patentee does not file a timely request for reconsideration of this patent term adjustment calculation including the information required by 37 CFR 1.705(b)(2) and the fee required by 37 CFR 1.18(e), the USPTO will issue a certificate of correction reflecting the PTA determination noted above.

Patentee should be aware that in order to preserve the right to review in the United States District Court for the District of Columbia of the USPTO patent term adjustment determination, patentee must ensure that he or she also take the steps required under 35 U.S.C. 154(b)(4)(A) in a timely manner. Nothing in the request for recalculation should be construed as providing an alternative time frame for commencing a civil action under 35 U.S.C. 154(b)(4)(A).

Any questions concerning this decision should be directed to the Office of Patent Legal Administration at 571-272-7702.

UNITED STATES PATENT AND TRADEMARK OFFICE

UNITED STATES DEPARTMENT OF COMMERCE
United States Patent and Trademark Office
Address: COMMISSIONER FOR PATENTS
P.O. Box 1450
Alexandria, Virginia 22313-1450
www.uspto.gov

PCE INDUSTRY, INC.
ATT. Steven Reiss
288 SOUTH MAYO AVENUE
CITY OF INDUSTRY, CA 91789

Mail Date: 04/21/2010

Applicant	: Mong-Tung Lin	: DECISION ON REQUEST FOR
Patent Number	: 7591121	: RECALCULATION of PATENT
Issue Date	: 09/22/2009	: TERM ADJUSTMENT IN VIEW
Appliction No	: 11/411,586	: OF WYETH AND NOTICE OF INTENT TO
Filed	: 04/26/2006	: ISSUE CERTIFICATE OF CORRECTION
		:

The Request for Recalculation is **GRANTED** to the extent indicated.

The patent term adjustment has been determined to be **310** days. The USPTO will *sua sponte* issue a certificate of correction reflecting the amount of PTA days determined by the recalculation.

Prior to the issuance of the certificate of correction, the USPTO will afford patentee an opportunity to be heard and request reconsideration. Accordingly, patentee has **one month or thirty (30) days**, whichever is longer, to file a request for reconsideration of this patent term adjustment calculation. See 35 U.S.C. 154(b)(3)(B)(ii) and 37 CFR 1.322(a)(4). No extensions of time will be granted under 37 CFR 1.136.

Patentee should use document code PET.OP if electronically filing a request for reconsideration of this patent term adjustment calculation. The patentee must also include the information required by 37 CFR 1.705(b)(2) and the fee required by 37 CFR 1.18(e). If patentee does not file a timely request for reconsideration of this patent term adjustment calculation including the information required by 37 CFR 1.705(b)(2) and the fee required by 37 CFR 1.18(e), the USPTO will issue a certificate of correction reflecting the PTA determination noted above.

Patentee should be aware that in order to preserve the right to review in the United States District Court for the District of Columbia of the USPTO patent term adjustment determination, patentee must ensure that he or she also take the steps required under 35 U.S.C. 154(b)(4)(A) in a timely manner. Nothing in the request for recalculation should be construed as providing an alternative time frame for commencing a civil action under 35 U.S.C. 154(b)(4)(A).

Any questions concerning this decision should be directed to the Office of Patent Legal Administration at 571-272-7702.

UNITED STATES PATENT AND TRADEMARK OFFICE

UNITED STATES DEPARTMENT OF COMMERCE
United States Patent and Trademark Office
Address: COMMISSIONER FOR PATENTS
P.O. Box 1450
Alexandria, Virginia 22313-1450
www.uspto.gov

PCE INDUSTRY, INC.
ATT. Steven Reiss
288 SOUTH MAYO AVENUE
CITY OF INDUSTRY, CA 91789

Mail Date: 05/18/2010

Applicant : Mong-Tung Lin
Patent Number : 7591121
Issue Date : 09/22/2009
Application No: 11/411,586
Filed : 04/26/2006

: NOTICE CONCERNING IMPROPER
: CALCULATION OF PATENT TERM
: ADJUSTMENT BASED UPON USPTO
: IMPROPERLY MEASURING REDUCTION
: PERIOD UNDER 37 CFR 1.704(c)(10).

The United States Patent and Trademark Office (USPTO) discovered that in processing the recent recalculation decisions mailed in response to patentee's filed Request for Recalculation of Patent Term Adjustment in view of Wyeth, the USPTO improperly measured the reduction period for reductions under 37 CFR 1.704(c)(10). Pursuant to 37 CFR 1.704(c)(10), patentee's reduction begins on the date of filing the amendment under 37 CFR 1.312 ("1.312 amendment") or other related paper and ends on the date that the Office mails a response to the filing of the 1.312 amendment or other paper. It has been discovered that during the recalculation, the calculation failed to the limit the reduction to the mail date of the response to the 1.312 amendment or other paper. Accordingly, patentee's reductions were greater than warranted.

This notice **VACATES** the previous GRANTED request for recalculation and provides patentee with a revised GRANTED recalculation.

The patent term adjustment has been determined to be **342** days. The USPTO will *sua sponte* issue a certificate of correction reflecting the amount of patent term adjustment (PTA) days determined by the recalculation.

Prior to the issuance of the certificate of correction, the USPTO will afford patentee an opportunity to be heard and request reconsideration. Accordingly, patentee has **one month or thirty (30) days** from the mail date of this notice, whichever is longer, to file a request for reconsideration of this PTA calculation. See 35 U.S.C. § 154(b)(3)(B)(ii) and 37 CFR 1.322(a)(4).

Patentee should use document code PET.OP if electronically filing a request for reconsideration of this PTA calculation. The patentee must also include the information required by 37 CFR 1.705(b)(2), and the fee required by 37 CFR 1.18(e). If patentee does not file a timely request for reconsideration of this PTA calculation, including the information required by 37 CFR 1.705(b)(2) and the fee required by 37 CFR 1.18(e), the USPTO will issue a certificate of correction reflecting the PTA determination noted above.

Patentee should be aware that in order to preserve the right of review of the USPTO's PTA determination in the United States District Court for the District of Columbia, patentee must ensure that the steps required under 35 U.S.C. § 154 (b)(4) are taken in a timely manner. Nothing in the request for recalculation should be construed as providing an alternative time frame for commencing a civil action under 35 U.S.C. § 154(b)(4).

UNITED STATES PATENT AND TRADEMARK OFFICE

Commissioner for Patents
United States Patent and Trademark Office
P.O. Box 1450
Alexandria, VA 22313-1450
www.uspto.gov

NIXON PEABODY, LLP
401 9TH STREET, NW
SUITE 900
WASHINGTON DC 20004-2128

COPY MAILED

NOV 0 6 2009

OFFICE OF PETITIONS

In re Application of :
Stone, et al. :
Application No. 11/411,589 : ON PETITION
Filed: April 25, 2006 :
Attorney Docket No. 048647-001100 :

This is a decision on the petition under 37 CFR 1.137(a) filed July 6, 2009.

The petition is **GRANTED.**

This application became abandoned for failure to timely reply to the non-final Office action mailed December 10, 2008, which set a shortened statutory period for reply of three months from its mailing date. A response was not received within the allowable period, and the application became abandoned on March 11, 2009.

Petitioner has established that the entire delay—from the date the application became abandoned until the filing of the instant petition--was unavoidable.

Form PTO/SB/81, filed December 3, 2008, appointing a new attorney and revoking all previous powers of attorney is noted and made of record.

The request for an extension of time within the third month made July 6, 2009, is noted but cannot be granted as the request was made outside the maximum statutory period for reply to the non-final Office action. The amount of $1,590.00 will be refunded, in due course.

The file is now being directed to Technology Center 2800, GAU 2832 for further processing, including consideration of the amendment filed July 6, 2009.

Telephone inquiries concerning this decision may be directed to the undersigned at (571) 272-3222.

Kenya A. McLaughlin
Petitions Attorney
Office of Petitions

UNITED STATES PATENT AND TRADEMARK OFFICE

Commissioner for Patents
United States Patent and Trademark Office
P.O. Box 1450
Alexandria, VA 22313-1450
www.uspto.gov

FROST BROWN TODD, LLC
2200 PNC CENTER
201 E. FIFTH STREET
CINCINNATI OH 45202

COPY MAILED

AUG 13 2007

OFFICE OF PETITIONS

In re Application of :
Rory P. Falato, et al. :
Application No. 11/411,599 : ON PETITION
Filed: April 25, 2006 :
Attorney Docket No. 37516-3 :

This is a decision on the petition under the unintentional provisions of 37 CFR 1.137(b), filed April 13, 2007, to revive the above-identified application.

The petition is **DISMISSED**.

The application became abandoned for failure to reply in a timely manner to the Notice to File Missing Parts of Nonprovisional Application (Notice), mailed May 22, 2006. The Notice set a period for reply of two (2) months from the mail date of the Notice. No extensions of time under the provisions of 37 CFR 1.136(a) were obtained. Accordingly, the application became abandoned on July 23, 2006.

A grantable petition under 37 CFR 1.137(b) must be accompanied by: (1) the required reply, unless previously filed; (2) the petition fee as set forth in 37 CFR 1.17(m); (3) a statement that the entire delay in filing the required reply from the due date for the reply until the filing of a grantable petition pursuant to 37 CFR 1.137(b) was unintentional; and (4) any terminal disclaimer (and fee as set forth in 37 CFR 1.20(d)) required by 37 CFR 1.137(d). Where there is a question as to whether either the abandonment or the delay in filing a petition under 37 CFR 1.137 was unintentional, the Director may require additional information. See MPEP 711.03(c)(II)(C) and (D). The instant petition lacks item(s) 1.

A review of the application reveals that the petitioner supplied part of the required reply to the Office action mailed on May 22, 2006. The petitioner failed to submit the required fee of $65 surcharge under 37 CFR 1.16(f) in response to the Notice. If the petitioner intends to submit a renewed petition the fee set forth under 37 CFR 1.16(f) the required fee must be submitted along with the renewed petition.

Any request for reconsideration of this decision must be submitted within **TWO (2) MONTHS** from the mail date of this decision. Extensions of time under 37 CFR 1.136(a) are permitted. The reconsideration request should include a cover letter entitled "Renewed Petition under 37 CFR 1.137(b)." This is **not** a final agency action within the meaning of 5 U.S.C. § 704.

It is not apparent whether the person signing the statement of unintentional delay was in a position to have firsthand or direct knowledge of the facts and circumstances of the delay at issue. Nevertheless, such statement is being treated as having been made as the result of a reasonable inquiry into the facts and circumstances of such delay. See 37 CFR 10.18(b) and Changes to Patent Practice and Procedure; Final Rule Notice, 62 Fed. Reg. 53131, 53178 (October 10, 1997), 1203 Off. Gaz. Pat. Office 63, 103 (October 21, 1997). In the event that such an inquiry has not been made, petitioner must make such an inquiry. If such inquiry results in the discovery that it is not correct that the entire delay in filing the required reply from the due date for the reply until the filing of a grantable petition pursuant to 37 CFR 1.137(b) was unintentional, petitioner must notify the Office.

Further correspondence with respect to this matter should be addressed as follows:

By Mail:
Mail Stop PETITION
Commissioner for Patents
P. O. Box 1450
Alexandria, VA 22313-1450

By hand:
U. S. Patent and Trademark Office
Customer Service Window, Mail Stop Petitions
Randolph Building
401 Dulany Street
Alexandria, VA 22314

The centralized facsimile number is **(571) 273-8300.**

Telephone inquiries concerning this decision should be directed to the undersigned at (571) 272-1642.

April M. Wise
Petitions Examiner
Office of Petitions

UNITED STATES PATENT AND TRADEMARK OFFICE

Commissioner for Patents
United States Patent and Trademark Office
P.O. Box 1450
Alexandria, VA 22313-1450
www.uspto.gov

FROST BROWN TODD, LLC
2200 PNC CENTER
201 E. FIFTH STREET
CINCINNATI, OH 45202

COPY MAILED

DEC 19 2007

OFFICE OF PETITIONS

In re Application of :
Rory P. Falato, et al. :
Application No. 11/411,599 : DECISION ON PETITION
Filed: April 25, 2006 :
Attorney Docket No. 37516-3 :

This is a decision on the petition under the unintentional provisions of 37 CFR 1.137(b), filed October 12, 2007, to revive the above-identified application.

The petition is **GRANTED**.

The application became abandoned for failure to reply in a timely manner to the Notice to File Missing Parts of Nonprovisional Application (Notice), mailed May 22, 2006. The Notice set a period for reply of two (2) months from the mail date of the Notice. No extensions of time under the provisions of 37 CFR 1.136(a) were obtained. Accordingly, the application became abandoned on July 23, 2006.

The petition satisfies the requirements of 37 CFR 1.137(b) in that petitioner has supplied (1) the reply in the form of a reply with required surcharge fee $65, (2) the petition fee of $750, and (3) a proper statement of unintentional delay.

Telephone inquiries concerning this decision should be directed to undersigned at (571) 272-1642.

This application is being referred to the Office of Data Application Management to process the reply received October 12, 2007.

April M. Wise
Petitions Examiner
Office of Petitions

UNITED STATES PATENT AND TRADEMARK OFFICE

Commissioner for Patents
United States Patent and Trademark Office
P.O. Box 1450
Alexandria, VA 22313-1450
www.uspto.gov

MICHAEL J. CORRIGAN
THE HOOVER COMPANY
101 EAST MAPLE STREET
NORTH CANTON OH 44720

COPY MAILED

MAR 19 2008

OFFICE OF PETITIONS

In re Application of
Kurt D. Harsh et al.
Application No. 11/411,615
Filed: April 26, 2006
Attorney Docket Number: 2845

ON PETITION

This is a decision on the petition under 37 CFR 1.137(b)[1], filed February 4, 2008, to revive the above identified application.

The petition is **DISMISSED**.

Any request for reconsideration of this decision must be submitted within TWO (2) MONTHS from the mail date of this decision. Extensions of time under 37 CFR 1.136(a) are permitted. The reconsideration request should include a cover letter entitled "Renewed Petition under 37 CFR 1.137(b)".This is **not** a final agency decision.

This application became abandoned January 22, 2008 for failure to timely pay the issue fee on or before January 18, 2008. Accordingly, the Notice of Abandonment was mailed on February 22, 2008 after the filing of the instant petition.

Pursuant to 37 CFR 1.137(b) however, the instant petition lacks item (2) of the regulation.

---

[1]Effective December 1, 1997, the provisions of 37 CFR 1.137(b) now provide that where the delay in reply was unintentional, a petition may be filed to revive an abandoned application or a lapsed patent pursuant to 37 CFR 1.137(b). A grantable petition filed under the provisions of 37 CFR 1.137(b) must be accompanied by:

(1) the required reply, unless previously filed. In a nonprovisional application abandoned for failure to prosecute, the required reply may be met by the filing of a continuing application. In an application or patent, abandoned or lapsed for failure to pay the issue fee or any portion thereof, the required reply must be the payment of the issue fee or any outstanding balance thereof.

(2) the petition fee as set forth in 37 CFR 1.17(m);

(3) a statement that the entire delay in filing the required reply from the due date for the reply until the filing of a grantable petition pursuant to 37 CFR 1.137(b) was unintentional. The Commissioner may required additional information where there is a question whether the delay was unintentional; and

(4) any terminal disclaimer (and fee as set forth in 37 CFR 1.20(d)) required pursuant to 37 CFR 1.137(c)).

The available balance on the credit card given for charging the fees was not sufficient to charge the petition fee and since no authorizations for debiting a deposit account for any deficiencies have been granted, the required fees have not been paid.

In view thereof, before a petition on the merits can be addressed and granted, the petition fee in the amount of $1540.00 will have to be paid. The application will therefore remain in an abandoned status until such time as the petition fee has been paid.

Additionally, there is no indication that petitioner herein was ever empowered to prosecute the instant application. If petitioner desires to receive future correspondence regarding this application, the appropriate power of attorney and address change documentation must be submitted. A courtesy copy of this decision will be mailed to petitioner. However, all future correspondence will be directed to the address of record until such time as appropriate instructions are received to the contrary.

Further correspondence with respect to this matter should be addressed as follows:

By mail: Mail Stop Petitions
Commissioner for Patents
P.O. Box 1450
Alexandria VA 22313-1450

By FAX: (571) 273-8300

Telephone inquiries concerning this matter may be directed to the undersigned Petitions Attorney at (571) 272-3212.

Patricia Faison-Ball

Patricia Faison-Ball
Senior Petitions Attorney
Office of Petitions

cc:

MARK L. WEBER
FIRST NATIONAL TOWER
FOURTH FLOOR
AKRON, OH 44308-1242

UNITED STATES PATENT AND TRADEMARK OFFICE

Commissioner for Patents
United States Patent and Trademark Office
P.O. Box 1450
Alexandria, VA 22313-1450
www.uspto.gov

MICHAEL J. CORRIGAN
THE HOOVER COMPANY
101 EAST MAPLE STREET
NORTH CANTON OH 44720

COPY MAILED

APR 23 2008

In re Application of
Kurt D. Harsh et al.
Application No. 11/411,615
Filed: April 26, 2006
Attorney Docket Number: 2845

ON PETITION

This is a decision on the renewed petition under 37 CFR 1.137(b),[1] filed April 7, 2008, to revive the above-identified application.

The petition is **GRANTED**.

This application became abandoned January 22, 2008 for failure to timely pay the issue fee on or before January 18, 2008. Accordingly, the Notice of Abandonment was mailed on February 22, 2008 after the filing of the petition to revive on February 4, 2008. The petition was dismissed in a decision mailed March 19, 2008 because the petition fees were deficient.

Comes now petitioner with the instant renewed petition and the proper petition fees. All other requirements having been met, this matter is being referred to the Publishing Division to be processed into a patent.

With respect to the power of attorney, a power of attorney and address change are required if petitioner intends to prosecute the instant application. However, a petition will

---

[1]Effective December 1, 1997, the provisions of 37 CFR 1.137(b) now provide that where the delay in reply was unintentional, a petition may be filed to revive an abandoned application or a lapsed patent pursuant to 37 CFR 1.137(b). A grantable petition filed under the provisions of 37 CFR 1.137(b) must be accompanied by:
(1) the required reply, unless previously filed. In a nonprovisional application abandoned for failure to prosecute, the required reply may be met by the filing of a continuing application. In a nonprovisional application filed on or after June 8, 1995, and abandoned for failure to prosecute, the required reply may also be met by the filing of a request for continued examination in compliance with § 1.114. In an application or patent, abandoned or lapsed for failure to pay the issue fee or any portion thereof, the required reply must be the payment of the issue fee or any outstanding balance thereof. In an application abandoned for failure to pay the publication fee, the required reply must include payment of the publication fee.
(2) the petition fee as set forth in 37 CFR 1.17(m);
(3) a statement that the entire delay in filing the required reply from the due date for the reply until the filing of a grantable petition pursuant to 37 CFR 1.137(b) was unintentional. The Commissioner may required additional information where there is a question whether the delay was unintentional; and
(4) any terminal disclaimer (and fee as set forth in 37 CFR 1.20(d)) required pursuant to 37 CFR 1.137(c)).

be accepted if filed by a registered patent attorney but no correspondence regarding this application will be sent to the petitioner until such time as the appropriate power of attorney and address change documentation has been submitted

Telephone inquiries concerning this matter may be directed to the undersigned

Patricia Faison-Ball
Senior Petitions Attorney
Office of Petitions

cc:

MARK L. WEBER
FIRST NATIONAL TOWER
FOURTH FLOOR
AKRON, OH 44308-1242

UNITED STATES PATENT AND TRADEMARK OFFICE

UNITED STATES DEPARTMENT OF COMMERCE
United States Patent and Trademark Office
Address: COMMISSIONER FOR PATENTS
P.O. Box 1450
Alexandria, Virginia 22313-1450
www.uspto.gov

MCDONNELL BOEHNEN HULBERT & BERGHOFF LLP
300 S. WACKER DRIVE
32ND FLOOR
CHICAGO, IL 60606

Mail Date: 04/21/2010

Applicant	: Mark Webster	: DECISION ON REQUEST FOR
Patent Number	: 7668258	: RECALCULATION of PATENT
Issue Date	: 02/23/2010	: TERM ADJUSTMENT IN VIEW
Appliction No	: 11/411,619	: OF WYETH AND NOTICE OF INTENT TO
Filed	: 04/26/2006	: ISSUE CERTIFICATE OF CORRECTION
		:

The Request for Recalculation is **GRANTED** to the extent indicated.

The patent term adjustment has been determined to be **801** days. The USPTO will *sua sponte* issue a certificate of correction reflecting the amount of PTA days determined by the recalculation.

Prior to the issuance of the certificate of correction, the USPTO will afford patentee an opportunity to be heard and request reconsideration. Accordingly, patentee has **one month or thirty (30) days**, whichever is longer, to file a request for reconsideration of this patent term adjustment calculation. See 35 U.S.C. 154(b)(3)(B)(ii) and 37 CFR 1.322(a)(4). No extensions of time will be granted under 37 CFR 1.136.

Patentee should use document code PET.OP if electronically filing a request for reconsideration of this patent term adjustment calculation. The patentee must also include the information required by 37 CFR 1.705(b)(2) and the fee required by 37 CFR 1.18(e). If patentee does not file a timely request for reconsideration of this patent term adjustment calculation including the information required by 37 CFR 1.705(b)(2) and the fee required by 37 CFR 1.18(e), the USPTO will issue a certificate of correction reflecting the PTA determination noted above.

Patentee should be aware that in order to preserve the right to review in the United States District Court for the District of Columbia of the USPTO patent term adjustment determination, patentee must ensure that he or she also take the steps required under 35 U.S.C. 154(b)(4)(A) in a timely manner. Nothing in the request for recalculation should be construed as providing an alternative time frame for commencing a civil action under 35 U.S.C. 154(b)(4)(A).

Any questions concerning this decision should be directed to the Office of Patent Legal Administration at 571-272-7702.

UNITED STATES PATENT AND TRADEMARK OFFICE

Commissioner for Patents
United States Patent and Trademark Office
P.O. Box 1450
Alexandria, VA 22313-1450
www.uspto.gov

COPY MAILED

APR 09 2009

OFFICE OF PETITIONS

MOTOROLA, INC.
LAW DEPARTMENT
1303 E. ALGONQUIN ROAD
SCHAUMBURG, IL 60196

In re Application of
Saraswathi A. Mahadevaiyer, et al.
Application No. 11/411,632
Filed: April 26, 2006
Attorney Docket No. CE16288W

ON PETITION

This is a decision in response to the petition, filed February 13, 2009, to revive the above-identified application under the provisions of 37 CFR 1.137(b).

The petition is **GRANTED**.

The application became abandoned for failure to reply in a timely manner to the non-final Office action mailed July 21, 2008, which set a shortened statutory period for reply of three (3) months. No extension of time under the provisions of 37 CFR 1.136(a) was obtained. Accordingly, the application became abandoned on October 22, 2008. This decision precedes the mailing of a Notice of Abandonment. On February 13, 2009, the present petition was filed.

The petition satisfies the conditions for revival pursuant to the provisions of 37 CFR 1.137(b) in that petitioner has supplied (1) a proposed reply in the form of an amendment; (2) the petition fee of $1,620; and (3) an adequate statement of unintentional delay.

The application is being referred to Technology Center AU 2617 for appropriate action by the Examiner in the normal course of business on the response filed February 13, 2009.

Telephone inquiries concerning this decision should be directed to the undersigned at (571) 272-3204. Inquiries relating to further prosecution should be directed to the Technology Center.

Sherry D. Brinkley
Petitions Examiner
Office of Petitions

UNITED STATES PATENT AND TRADEMARK OFFICE

UNITED STATES DEPARTMENT OF COMMERCE
United States Patent and Trademark Office
Address: COMMISSIONER FOR PATENTS
P.O. Box 1450
Alexandria, Virginia 22313-1450
www.uspto.gov

PCE INDUSTRY, INC.
ATT. Steven Reiss
288 SOUTH MAYO AVENUE
CITY OF INDUSTRY, CA 91789

Mail Date: 04/27/2010

Applicant	: Zhou-quan Zuo	: DECISION ON REQUEST FOR
Patent Number	: 7647079	: RECALCULATION of PATENT
Issue Date	: 01/12/2010	: TERM ADJUSTMENT IN VIEW
Application No	: 11/411,653	: OF WYETH AND NOTICE OF INTENT TO
Filed	: 04/26/2006	: ISSUE CERTIFICATE OF CORRECTION
		:

The Request for Recalculation is **GRANTED** to the extent indicated.

The patent term adjustment has been determined to be **731** days. The USPTO will *sua sponte* issue a certificate of correction reflecting the amount of PTA days determined by the recalculation.

Prior to the issuance of the certificate of correction, the USPTO will afford patentee an opportunity to be heard and request reconsideration. Accordingly, patentee has **one month or thirty (30) days**, whichever is longer, to file a request for reconsideration of this patent term adjustment calculation. See 35 U.S.C. 154(b)(3)(B)(ii) and 37 CFR 1.322(a)(4). No extensions of time will be granted under 37 CFR 1.136.

Patentee should use document code PET.OP if electronically filing a request for reconsideration of this patent term adjustment calculation. The patentee must also include the information required by 37 CFR 1.705(b)(2) and the fee required by 37 CFR 1.18(e). If patentee does not file a timely request for reconsideration of this patent term adjustment calculation including the information required by 37 CFR 1.705(b)(2) and the fee required by 37 CFR 1.18(e), the USPTO will issue a certificate of correction reflecting the PTA determination noted above.

Patentee should be aware that in order to preserve the right to review in the United States District Court for the District of Columbia of the USPTO patent term adjustment determination, patentee must ensure that he or she also take the steps required under 35 U.S.C. 154(b)(4)(A) in a timely manner. Nothing in the request for recalculation should be construed as providing an alternative time frame for commencing a civil action under 35 U.S.C. 154(b)(4)(A).

Any questions concerning this decision should be directed to the Office of Patent Legal Administration at 571-272-7702.

UNITED STATES PATENT AND TRADEMARK OFFICE

UNITED STATES DEPARTMENT OF COMMERCE
United States Patent and Trademark Office
Address: COMMISSIONER FOR PATENTS
P.O. Box 1450
Alexandria, Virginia 22313-1450
www.uspto.gov

PCE INDUSTRY, INC.
ATT. Steven Reiss
288 SOUTH MAYO AVENUE
CITY OF INDUSTRY, CA 91789

Mail Date: 04/21/2010

Applicant	: Yang-Chang Chien	: DECISION ON REQUEST FOR
Patent Number	: 7609316	: RECALCULATION of PATENT
Issue Date	: 10/27/2009	: TERM ADJUSTMENT IN VIEW
Appliction No	: 11/411,654	: OF WYETH AND NOTICE OF INTENT TO
Filed	: 04/26/2006	: ISSUE CERTIFICATE OF CORRECTION
		:

The Request for Recalculation is **GRANTED** to the extent indicated.

The patent term adjustment has been determined to be **579** days. The USPTO will *sua sponte* issue a certificate of correction reflecting the amount of PTA days determined by the recalculation.

Prior to the issuance of the certificate of correction, the USPTO will afford patentee an opportunity to be heard and request reconsideration. Accordingly, patentee has **one month or thirty (30) days**, whichever is longer, to file a request for reconsideration of this patent term adjustment calculation. See 35 U.S.C. 154(b)(3)(B)(ii) and 37 CFR 1.322(a)(4). No extensions of time will be granted under 37 CFR 1.136.

Patentee should use document code PET.OP if electronically filing a request for reconsideration of this patent term adjustment calculation. The patentee must also include the information required by 37 CFR 1.705(b)(2) and the fee required by 37 CFR 1.18(e). If patentee does not file a timely request for reconsideration of this patent term adjustment calculation including the information required by 37 CFR 1.705(b)(2) and the fee required by 37 CFR 1.18(e), the USPTO will issue a certificate of correction reflecting the PTA determination noted above.

Patentee should be aware that in order to preserve the right to review in the United States District Court for the District of Columbia of the USPTO patent term adjustment determination, patentee must ensure that he or she also take the steps required under 35 U.S.C. 154(b)(4)(A) in a timely manner. Nothing in the request for recalculation should be construed as providing an alternative time frame for commencing a civil action under 35 U.S.C. 154(b)(4)(A).

Any questions concerning this decision should be directed to the Office of Patent Legal Administration at 571-272-7702.

UNITED STATES PATENT AND TRADEMARK OFFICE

Commissioner for Patents
United States Patent and Trademark Office
P.O. Box 1450
Alexandria, VA 22313-1450
www.uspto.gov

Power3 Medical Products, Inc.
Ira L. Goldknopf, Ph.D.
3400 Research Forest Drive
The Woodlands TX 77381

COPY MAILED
NOV 22 2006
OFFICE OF PETITIONS

In re Application of :
Ira Goldknopf, Essam Sheta :
Stanley Appel, Jennifer Bryson:
Lemuel Moye, Albert Yen :
Brian Folsom and :
Miguel Mosqueda :
Application No. 11/411,659 : ON PETITION
Filed: April 26, 2006 :
Title: ASSAY FOR NEUROMUSCULAR:
DISEASES :

This is in response to the "PETITION FOR UNSIGNED INVENTOR" filed August 21, 2006.

For the reasons stated herein, the petition is **DISMISSED** without consideration on the merits.

As stated in current 37 CFR 1.33(b),

> Amendments and other papers, except for written assertions pursuant to § 1.27(c)(2)(ii) of this part, filed in the application must be signed by:
>
> (1) A patent practitioner of record appointed in compliance with § 1.32(b);
>
> (2) A patent practitioner not of record who acts in a representative capacity under the provisions of § 1.34;
>
> (3) An assignee as provided for under § 3.71(b) of this chapter; or

(4) All of the applicants (§ 1.41(b)) for patent, unless there is an assignee of the entire interest and such assignee has taken action in the application in accordance with § 3.71 of this chapter.

Pursuant to 37 CFR 3.73(b), a party must be established as the assignee by satisfying the requirements of that subsection, in order to be recognized as an owner or part owner, for purposes of taking action in patent matters before the Office.

§ 3.73 Establishing right of assignee to take action.
(a) The inventor is presumed to be the owner of a patent application, and any patent that may issue therefrom, unless there is an assignment. The original applicant is presumed to be the owner of a trademark application or registration, unless there is an assignment.

(b)(1) In order to request or take action in a patent or trademark matter, the assignee must establish its ownership of the patent or trademark property of paragraph (a) of this section to the satisfaction of the Director. The establishment of ownership by the assignee may be combined with the paper that requests or takes the action. Ownership is established by submitting to the Office a signed statement identifying the assignee, accompanied by either:

(i) Documentary evidence of a chain of title from the original owner to the assignee (e.g., copy of an executed assignment). The documents submitted to establish ownership may be required to be recorded pursuant to § 3.11 in the assignment records of the Office as a condition to permitting the assignee to take action in a matter pending before the Office; or

(ii) A statement specifying where documentary evidence of a chain of title from the original owner to the assignee is recorded in the assignment records of the Office (e.g., reel and frame number).

(2) The submission establishing ownership must show that the person signing the submission is a person authorized to act on behalf of the assignee by:

(i) Including a statement that the person signing the submission is authorized to act on behalf of the assignee; or
(ii) Being signed by a person having apparent authority to sign on behalf of the assignee, e.g., an officer of the assignee.

The action taken by the assignee, and the 37 CFR 3.73(b) submission establishing that the assignee is the appropriate assignee to take such action, can be combined in one paper. The establishment of ownership by the assignee must be submitted prior to, or at the same time as, the paper requesting or taking action is submitted. 37 CFR 3.73(c). If the submission establishing ownership is not present, the action sought to be taken will not be given effect. If the submission establishing ownership is submitted at a later date, that date will be the date of the request for action or the date of the assignee's action taken. See also MPEP 324.

This petition was unsigned. The only signature present in the papers is that of first-named inventor Goldknopf on a request for extension of time. No attorney is of record in this application. It may have been Power3 Medical Products intent to submit this petition as an assignee of the subject application. However, Power3 is not established as the assignee. Further, no 3.73(b) statement establishing their right to take action in this application has been filed. Nor is such a statement of record in the application.

The petition to be considered on the merits must be signed by a proper party, pursuant to 37 CFR 1.33(b).

It is further noted that a declaration filed pursuant to 37 CFR 1.47(a) must comply with §1.63. Specifically, the declaration must fully identify all of the inventors, whether signing or not. Inventors cannot just be presented with signature pages. A full declaration identifying all inventors must be presented to each inventor, along with a copy of the application papers. In turn, the signed declarations presented to the Office must be copies of the full declaration as presented to the inventor, not just the signature pages. Further, in this case, it is unclear why there are blank signature boxes in the declaration and why 2 different versions of page 5 of 5 of the declaration were presented to the Office.

Any petition for status under 1.47(a) must be signed by a proper party, include an acceptable declaration with adequate proof that the application papers were presented to the non-signing inventors, and comply with all other requirements of 37 CFR 1.47.

Further correspondence with respect to this decision should be addressed as follows:

By mail:	Mail Stop Petition Commissioner for Patents P.O. Box 1450 Alexandria, VA 22313-1450
By fax:	(571) 273-8300 ATTN: Office of Petitions
By hand:	Customer Service Window Randolph Building 401 Dulany Street Alexandria, VA 22314

Telephone inquiries related to this decision should be directed to the undersigned at (571) 272-3219.

Nancy Johnson
Senior Petitions Attorney
Office of Petitions

UNITED STATES PATENT AND TRADEMARK OFFICE

Commissioner for Patents
United States Patent and Trademark Office
P.O. Box 1450
Alexandria, VA 22313-1450
www.uspto.gov

Power3 Medical Products, Inc.
Ira L. Goldknopf, Ph.D.
3400 Research Forest Drive
The Woodlands TX 77381

COPY MAILED

MAR 2 2 2007

OFFICE OF PETITIONS

In re Application of :
Ira Goldknopf, Essam Sheta :
Stanley Appel, Jennifer Bryson:
Lemuel Moye, Albert Yen :
Brian Folsom and :
Miguel Mosqueda :
Application No. 11/411,659 : ON PETITION
Filed: April 26, 2006 :
Title: ASSAY FOR NEUROMUSCULAR:
DISEASES :

This is in response to the PETITION FOR UNSIGNED INVENTOR filed December 5, 2006.

The petition is **DISMISSED**.

Rule 47 applicant is given TWO MONTHS from the mailing date of this decision to reply, correcting the below-noted deficiencies. Any reply should be entitled "Request for Reconsideration of Petition Under 37 C.F.R. §1.47(a)," and should only address the deficiencies noted below, **except that the reply may include an oath or declaration executed by the non-signing inventor.** Failure to respond will result in abandonment of the application. Any extensions of time will be governed by 37 C.F.R. § 1.136(a).

The above-identified application was filed on April 26, 2006, with an application data sheet but without an executed oath or declaration. (It is noted that the ADS identifies 8 joint inventors). Accordingly, on May 22, 2006, the Office mailed a "Notice to File Missing Parts of Application," requiring an executed oath or declaration and the surcharge for its late filing. This Notice set a two-month time limit for reply with extensions of time obtainable under § 1.136(a).

On August 21, 2006, a petition under 1.47 was filed. However, by decision mailed November 22, 2006, the petition was dismissed without consideration on the merits because it was not shown to have been signed by a proper party, pursuant to 37 CFR 1.33(b). Further, even though the petition was not decided on the merits, petitioner was advised that the declaration submitted was not acceptable.

On instant renewed petition, applicants filed a 3.73(b) statement and other documentation to show that the petition as filed was being submitted by a proper party. Accordingly, consideration now turns to the merits of the petition.

It is noted that a declaration executed by the signing joint inventors was submitted on August 21, 2006. As indicated in the previous decision, this declaration is unacceptable because it does not identify all of the joint inventors. Identification of non-signing inventor Folsom is omitted from the identification of the inventive entity. On September 14, 2006, applicants submitted a declaration signed by previously non-signing inventor Folsom. However, as previously stated, it is unacceptable. Inventors cannot just be presented with signature pages. A full declaration identifying all inventors must be presented to each inventor, along with a copy of the application papers. In turn, the signed declarations presented to the Office must be copies of the full declaration as presented to the inventor, not just the signature pages. Further, in this case, it is unclear why there are blank signature boxes in the declaration and why 2 different versions of page 5 of 5 of the declaration were presented to the Office.

With respect to these deficiencies, MPEP 605.04 provides that:

> An oath or declaration under 37 CFR 1.63 by each actual inventor must be presented. While each inventor need not execute the same oath or declaration, each oath or declaration executed by an inventor must contain a complete listing of all inventors so as to clearly indicate what each inventor believes to be the appropriate inventive entity. Where individual declarations are executed, they must be submitted as individual declarations rather than combined into one declaration. For example, where the inventive entity is A and B, a declaration may not be executed only by A naming only A as the inventor and a different declaration may not be executed only by B naming only B as the inventor, which two declarations are then combined into one declaration with a first page of boiler plate, a second page with A's signature, and a second page with B's signature (so that it appears that the declaration was executed with the entire inventive entity appearing in the declaration when it did not).

These deficiencies in the declaration are neither explained nor cured. In view thereof, the petition must be dismissed.

On renewed petition, applicants should submit to the Office copies of each of the full declarations as presented to the inventor, not just the signature pages.

A response to this decision is required even though inventor Folsom has now joined in the application. Upon submission of an acceptable declaration(s), the petition under 1.47 will be dismissed as moot. Failure to timely respond to this decision will result in abandonment of the application.

Further correspondence with respect to this matter should be addressed as follows:

By mail: Mail Stop Petition
Commissioner for Patents
P.O. Box 1450
Alexandria, VA 22313-1450

By FAX: (571) 273-8300
Attn: Office of Petitions
ATTN: NANCY JOHNSON

By hand: Customer Service Window
Randolph Building
401 Dulany Street
Alexandria, VA 22314

Telephone inquiries related to this decision should be directed to the undersigned at (571) 272-3219.

Nancy Johnson
Senior Petitions Attorney
Office of Petitions

UNITED STATES PATENT AND TRADEMARK OFFICE

Commissioner for Patents
United States Patent and Trademark Office
P.O. Box 1450
Alexandria, VA 22313-1450
www.uspto.gov

Power3 Medical Products, Inc.
Ira L. Goldknopf, Ph.D.
3400 Research Forest Drive
The Woodlands TX 77381

COPY MAILED

MAY 02 2007

OFFICE OF PETITIONS

In re Application of	:	
Ira Goldknopf, Essam Sheta	:	
Stanley Appel, Jennifer Bryson	:	
Lemuel Moye, Albert Yen	:	
Brian Folsom and	:	
Miguel Mosqueda	:	
Application No. 11/411,659	:	DECISION ACCORDING STATUS
Filed: April 26, 2006	:	UNDER 37 CFR 1.47(a)
Title: ASSAY FOR NEUROMUSCULAR DISEASES	:	

This is a decision on the REQUEST FOR RECONSIDERATION OF PETITION UNDER 37 CFR 1.47(a) filed April 17, 2007.

The petition is **GRANTED**.

The above-identified application was filed on April 26, 2006, with an application data sheet identifying 8 joint inventors, but without an executed oath or declaration. In response to the Notice to File Missing Parts of Application mailed May 22, 2006, applicants filed on August 21, 2006, a petition under 1.47 was filed. However, by decision mailed November 22, 2006, the petition was dismissed without consideration on the merits because it was not shown to have been signed by a proper party, pursuant to 37 CFR 1.33(b). Further, even though the petition was not decided on the merits, petitioner was advised that the declaration submitted was not acceptable. On renewed petition filed December 5, 2006, applicants filed a 3.73(b) statement and other documentation to show that the petition as filed was being

submitted by a proper party. However, by decision mailed March 22, 2007, the petition was dismissed because the declarations submitted were still not in compliance with 37 CFR 1.63.

On instant renewed petition, applicants stated that the oath/declaration in the appropriate format - i.e., copies of the full oath/declaration as presented to each of the inventors was being submitted. In addition, applicants made clear that each of the eight inventors had been presented with a copy of the patent application, a copy of the confirmation filing receipt that lists all inventors and a copy of the full declaration listing all inventors. The petition included five declaration executed, in combination, by joint inventors Goldknopf, Sheta, Appel, Bryson, Yen, Folsom and Mosqueda on behalf of themselves and on behalf of non-signing joint inventor Moye.

The declarations filed April 17, 2007 have been reviewed and found in compliance with § 1.63. Applicants have now met all requirements of 37 CFR 1.47(a).

In view thereof, this application is hereby accorded Rule 1.47(a) status.

As provided in new Rule 1.47(c), this Office will forward notice of this application's filing to the non-signing inventor at the address given in the petition. Notice of the filing of this application will also be published in the Official Gazette.

Telephone inquiries related to this decision should be directed to the undersigned at (571) 272-3219.

Nancy Johnson
Senior Petitions Attorney
Office of Petitions

UNITED STATES PATENT AND TRADEMARK OFFICE

Commissioner for Patents
United States Patent and Trademark Office
P.O. Box 1450
Alexandria, VA 22313-1450
www.uspto.gov

LEMUEL MOYE
3607 Latma Drive
Houston TX 77025

COPY MAILED

MAY 02 2007

OFFICE OF PETITIONS

In re Application of :
Ira Goldknopf, Essam Sheta :
Stanley Appel, Jennifer Bryson:
Lemuel Moye, Albert Yen :
Brian Folsom and :
Miguel Mosqueda :
Application No. 11/411,659 : LETTER
Filed: April 26, 2006 :
Title: ASSAY FOR NEUROMUSCULAR:
DISEASES :

Dear Mr. Moye:

You are named as a joint inventor in the above-identified United States patent application filed under the provisions of 35 U.S.C. 116 (United States Code) and 37 CFR 1.47(a), Rules of Practice in Patent Cases. Should a patent be granted on the application you will be designated therein as a joint inventor.

As a named inventor you are entitled to inspect any paper in the file wrapper of the application, order copies of all or any part thereof (at a prepaid cost per 37 CFR 1.19) or make your position of record in the application. Alternatively, you may arrange to do any of the preceding through a registered patent attorney or agent presenting written authorization from you. If you care to join the application, counsel of record (see below) would presumably assist you. Joining in the application would entail the filing of an appropriate oath or declaration by you

pursuant to 37 CFR 1.63. However, no action on your part is required for this patent to issue with you as a named inventor.

Telephone inquiries regarding this communication should be directed to Petitions Attorney Nancy Johnson at (571) 272-3219. Requests for information regarding your application should be directed to the File Information Unit at (703) 308-2733. Information regarding how to pay for and order a copy of the application, or a specific paper in the application, should be directed to the Certification Division at (571) 272-3150 or 1-800-972-6382 (outside the Washington D.C. area).

Nancy Johnson
Senior Petitions Attorney
Office of Petitions

Power3 Medical Products, Inc.
Ira L. Goldknopf, Ph.D.
3400 Research Forest Drive
The Woodlands TX 77381

UNITED STATES PATENT AND TRADEMARK OFFICE

Commissioner for Patents
United States Patent and Trademark Office
P.O. Box 1450
Alexandria, VA 22313-1450
www.uspto.gov

PITNEY BOWES INC.
35 WATERVIEW DRIVE
P.O. BOX 3000
MSC 26-22
SHELTON, CT 06484-8000

COPY MAILED
NOV 14 2006
OFFICE OF PETITIONS

In re Application of	:	
Chiapetta et al.	:	
Application No. 11/411,684	:	DECISION NOTING
Filing or 371(c) Date: 04/26/2006	:	JOINDER OF
Title of Invention:	:	INVENTOR(S)
FORWARD AND REVERSE	:	
MEDIA ACCUMULATION SYSTEM	:	

This is in response to the "Petition and Fee Re: Nonsigning Inventor [37 [CFR] § 1.47(a)], filed July 24, 2006, and the "Letter Regarding Petition and Fee Re: Nonsigning Inventor Filed July 20, 2006", filed August 11, 2006, noting the joinder of the inventor.

In view of the joinder of the inventor, further consideration under 37 CFR 1.47(a) is not necessary and the Reconsideration of Petition is considered to be moot. This application does not have any Rule 1.47(a) status and no such status should appear on the file wrapper. This application need not be returned to this Office for further consideration under 37 CFR 1.47(a).

The Declaration has been entered and made of record.

Applicant is advised that the fee for the petition under 37 CFR 1.47 is currently $200.00. Applicant's deposit account has been charged the petition fee[1].

This application is being referred to the Office of Initial Patent Examination for further processing.

Telephone inquiries related to this decision may be directed to the undersigned at (571) 272-3232.

Derek L. Woods
Attorney
Office of Petitions

[1] The petition was a timely reply to the Notice to File Missing Parts of Nonprovisional Application, without which, a two (2) month extension of time would have been required to make the filing of the executed declaration timely.

UNITED STATES PATENT AND TRADEMARK OFFICE

UNITED STATES DEPARTMENT OF COMMERCE
United States Patent and Trademark Office
Address: COMMISSIONER FOR PATENTS
P.O. Box 1450
Alexandria, Virginia 22313-1450
www.uspto.gov

STANLEY J. GRADISAR
1182 THATCH CIRCLE
CASTLE ROCK, CO 80109

Mail Date: 04/21/2010

Applicant	: Jeffrey Scott Hawthorne	: DECISION ON REQUEST FOR
Patent Number	: 7611461	: RECALCULATION of PATENT
Issue Date	: 11/03/2009	: TERM ADJUSTMENT IN VIEW
Appliction No	: 11/411,692	: OF WYETH AND NOTICE OF INTENT TO
Filed	: 04/25/2006	: ISSUE CERTIFICATE OF CORRECTION
		:

The Request for Recalculation is **GRANTED** to the extent indicated.

The patent term adjustment has been determined to be **691** days. The USPTO will *sua sponte* issue a certificate of correction reflecting the amount of PTA days determined by the recalculation.

Prior to the issuance of the certificate of correction, the USPTO will afford patentee an opportunity to be heard and request reconsideration. Accordingly, patentee has **one month or thirty (30) days**, whichever is longer, to file a request for reconsideration of this patent term adjustment calculation. See 35 U.S.C. 154(b)(3)(B)(ii) and 37 CFR 1.322(a)(4). No extensions of time will be granted under 37 CFR 1.136.

Patentee should use document code PET.OP if electronically filing a request for reconsideration of this patent term adjustment calculation. The patentee must also include the information required by 37 CFR 1.705(b)(2) and the fee required by 37 CFR 1.18(e). If patentee does not file a timely request for reconsideration of this patent term adjustment calculation including the information required by 37 CFR 1.705(b)(2) and the fee required by 37 CFR 1.18(e), the USPTO will issue a certificate of correction reflecting the PTA determination noted above.

Patentee should be aware that in order to preserve the right to review in the United States District Court for the District of Columbia of the USPTO patent term adjustment determination, patentee must ensure that he or she also take the steps required under 35 U.S.C. 154(b)(4)(A) in a timely manner. Nothing in the request for recalculation should be construed as providing an alternative time frame for commencing a civil action under 35 U.S.C. 154(b)(4)(A).

Any questions concerning this decision should be directed to the Office of Patent Legal Administration at 571-272-7702.

UNITED STATES PATENT AND TRADEMARK OFFICE

UNITED STATES DEPARTMENT OF COMMERCE
United States Patent and Trademark Office
Address: COMMISSIONER FOR PATENTS
P.O. Box 1450
Alexandria, Virginia 22313-1450
www.uspto.gov

STANLEY J. GRADISAR
1182 THATCH CIRCLE
CASTLE ROCK, CO 80109

Mail Date: 05/18/2010

Applicant : Jeffrey Scott Hawthorne
Patent Number : 7611461
Issue Date : 11/03/2009
Application No: 11/411,692
Filed : 04/25/2006

: NOTICE CONCERNING IMPROPER
: CALCULATION OF PATENT TERM
: ADJUSTMENT BASED UPON USPTO
: IMPROPERLY MEASURING REDUCTION
: PERIOD UNDER 37 CFR 1.704(c)(10).

The United States Patent and Trademark Office (USPTO) discovered that in processing the recent recalculation decisions mailed in response to patentee's filed Request for Recalculation of Patent Term Adjustment in view of Wyeth, the USPTO improperly measured the reduction period for reductions under 37 CFR 1.704(c)(10). Pursuant to 37 CFR 1.704(c)(10), patentee's reduction begins on the date of filing the amendment under 37 CFR 1.312 ("1.312 amendment") or other related paper and ends on the date that the Office mails a response to the filing of the 1.312 amendment or other paper. It has been discovered that during the recalculation, the calculation failed to the limit the reduction to the mail date of the response to the 1.312 amendment or other paper. Accordingly, patentee's reductions were greater than warranted.

This notice **VACATES** the previous GRANTED request for recalculation and provides patentee with a revised GRANTED recalculation.

The patent term adjustment has been determined to be **726** days. The USPTO will *sua sponte* issue a certificate of correction reflecting the amount of patent term adjustment (PTA) days determined by the recalculation.

Prior to the issuance of the certificate of correction, the USPTO will afford patentee an opportunity to be heard and request reconsideration. Accordingly, patentee has **one month or thirty (30) days** from the mail date of this notice, whichever is longer, to file a request for reconsideration of this PTA calculation. See 35 U.S.C. § 154(b)(3)(B)(ii) and 37 CFR 1.322(a)(4).

Patentee should use document code PET.OP if electronically filing a request for reconsideration of this PTA calculation. The patentee must also include the information required by 37 CFR 1.705(b)(2), and the fee required by 37 CFR 1.18(e). If patentee does not file a timely request for reconsideration of this PTA calculation, including the information required by 37 CFR 1.705(b)(2) and the fee required by 37 CFR 1.18(e), the USPTO will issue a certificate of correction reflecting the PTA determination noted above.

Patentee should be aware that in order to preserve the right of review of the USPTO's PTA determination in the United States District Court for the District of Columbia, patentee must ensure that the steps required under 35 U.S.C. § 154 (b)(4) are taken in a timely manner. Nothing in the request for recalculation should be construed as providing an alternative time frame for commencing a civil action under 35 U.S.C. § 154(b)(4).

UNITED STATES PATENT AND TRADEMARK OFFICE

Commissioner for Patents
United States Patent and Trademark Office
P.O. Box 1450
Alexandria, VA 22313-1450
www.uspto.gov

CYNTHIA H. O'DONOHUE
APPLIED POWER CONCEPTS, INC.
411 EAST JULIANNA STREET
ANAHEIM, CA 92801

COPY MAILED

MAY 0 6 2009

OFFICE OF PETITIONS

In re Application of Farone :
Application No. 11/411,702 : Decision on Petition
Filing Date: April 26, 2006 :
Attorney Docket No. 3600.12UTL :

This is a decision on the petition under 37 CFR 1.137(b), filed February 12, 2009, to revive the above-identified application.

The petition is **granted**.

The above-identified application became abandoned for failure to reply in a timely manner to the non-final Office action including a requirement for restriction/election mailed March 11, 2008, which set a shortened statutory period for reply of one (1) month or thirty (30) days (whichever is later). An extension of time under the provisions of 37 CFR 1.136(a) was not obtained. Accordingly, the above-identified application became abandoned on April 12, 2008. A Notice of Abandonment was mailed November 4, 2008.

The instant petition requests revival of the application.

A grantable petition under 37 CFR 1.137(b) must be accompanied by:

(1) the reply required to the outstanding Office action or notice, unless previously filed,
(2) the petition fee,
(3) a statement that the entire delay in filing the required reply from the due date for the reply until the filing of a grantable petition pursuant to 37 CFR 1.137(b) was unintentional, and
(4) a terminal disclaimer and fee if the application was filed on or before June 8, 1995 or if the application is a design application.

Petitioner has submitted a reply to the non-final Office action in the form of an election. Petitioner has submitted the required petition fee of $810. Petitioner has stated the entire delay in filing the required reply from the due date for the reply until the filing of a grantable petition pursuant to 37 CFR 1.137(b) was unintentional.

Petitioner has met the requirements to revive the above-identified application pursuant to 37 CFR 1.137(b). Therefore, the petition is granted and the application is revived.

Technology Center Art Unit 1621 will be informed of the instant decision and will mail a "Notice of Improper Request for Continued Examination (RCE) based on the fact the RCE was filed when prosecution in this application was not closed. The reply to the March 11, 2008, in the form of an Election, will be considered by the examiner in due course.

Telephone inquiries regarding this communication should be directed to Petitions Attorney Steven Brantley at (571) 272-3203.

Charles Steven Brantley
Senior Petitions Attorney
Office of Petitions

UNITED STATES PATENT AND TRADEMARK OFFICE

UNITED STATES DEPARTMENT OF COMMERCE
United States Patent and Trademark Office
Address: COMMISSIONER FOR PATENTS
P.O. Box 1450
Alexandria, Virginia 22313-1450
www.uspto.gov

ALSTON & BIRD LLP
BANK OF AMERICA PLAZA
101 SOUTH TRYON STREET, SUITE 4000
CHARLOTTE, NC 28280-4000

Mail Date: 04/21/2010

Applicant	: Charles R. Sperry	: DECISION ON REQUEST FOR
Patent Number	: 7607911	: RECALCULATION of PATENT
Issue Date	: 10/27/2009	: TERM ADJUSTMENT IN VIEW
Appliction No	: 11/411,708	: OF WYETH AND NOTICE OF INTENT TO
Filed	: 04/26/2006	: ISSUE CERTIFICATE OF CORRECTION
		:

The Request for Recalculation is **GRANTED** to the extent indicated.

The patent term adjustment has been determined to be **675** days. The USPTO will *sua sponte* issue a certificate of correction reflecting the amount of PTA days determined by the recalculation.

Prior to the issuance of the certificate of correction, the USPTO will afford patentee an opportunity to be heard and request reconsideration. Accordingly, patentee has **one month or thirty (30) days**, whichever is longer, to file a request for reconsideration of this patent term adjustment calculation. See 35 U.S.C. 154(b)(3)(B)(ii) and 37 CFR 1.322(a)(4). No extensions of time will be granted under 37 CFR 1.136.

Patentee should use document code PET.OP if electronically filing a request for reconsideration of this patent term adjustment calculation. The patentee must also include the information required by 37 CFR 1.705(b)(2) and the fee required by 37 CFR 1.18(e). If patentee does not file a timely request for reconsideration of this patent term adjustment calculation including the information required by 37 CFR 1.705(b)(2) and the fee required by 37 CFR 1.18(e), the USPTO will issue a certificate of correction reflecting the PTA determination noted above.

Patentee should be aware that in order to preserve the right to review in the United States District Court for the District of Columbia of the USPTO patent term adjustment determination, patentee must ensure that he or she also take the steps required under 35 U.S.C. 154(b)(4)(A) in a timely manner. Nothing in the request for recalculation should be construed as providing an alternative time frame for commencing a civil action under 35 U.S.C. 154(b)(4)(A).

Any questions concerning this decision should be directed to the Office of Patent Legal Administration at 571-272-7702.

UNITED STATES PATENT AND TRADEMARK OFFICE

Commissioner for Patents
United States Patent and Trademark Office
P.O. Box 1450
Alexandria, VA 22313-1450
www.uspto.gov

BOYLE FREDRICKSON NEWHOLM STEIN & GRATZ, S.C.
250 E. WISCONSIN AVENUE
SUITE 1030
MILWAUKEE WI 53202

COPY MAILED

DEC 0 7 2006

OFFICE OF PETITIONS

In re Application of Thomas Richards :
Application No. 11/411,713 :
Filed: April 26, 2006 :
Attorney Docket No. 1508.031 :
For: Electronic Proximity Switch :

Decision Refusing to Accord
Status Under 37 CFR 1.47(b)

This is in response to the petition under 37 CFR 1.47(b), filed September 8, 2006.

The petition is **dismissed**.

Any request for reconsideration of this decision must be submitted within TWO (2) MONTHS from the mail date of this decision. Extensions of time under 37 CFR 1.136(a) are permitted. No further petition fee is required for the request. Any response should be entitled "Request for Reconsideration of Petition Under 37 CFR 1.47(b)" and may include an oath or declaration executed by the current non-signing inventor(s). **Failure to respond will result in abandonment of the application.**

A grantable petition under 37 CFR 1.47(b) requires:

(1) proof that the non-signing inventor cannot be found or reached after diligent effort or that the inventor refused to sign the declaration after having been presented with the application papers (specification, claims, and drawings),
(2) an acceptable oath or declaration;
(3) the petition fee;
(4) a statement of the last known address of the non-signing inventor;
(5) proof of proprietary interest; and
(6) proof of irreparable damage.

Applicant lacks items (2) and (6) above.

As to item (2), the declaration signed by Hapke on Richard's behalf fails to list the citizenship, mailing address, or residential address for Richards.

As to item (6), petitioner has failed to provide proof of irreparable damage (see MPEP 409.03(g)). A statement by Rule 47 applicant that the filing is necessary to preserve the rights of the parties would be sufficient.

Further correspondence with respect to this matter should be addressed as follows:

By mail: Mail Stop Petition
Commissioner for Patents
P.O. Box 1450
Alexandria, VA 22313-1450

By facsimile: (571) 273-8300
Attn: Office of Petitions

By hand: U.S. Patent and Trademark Office
Customer Service Window
Randolph Building
401 Dulany Street
Alexandria, VA 22314

Telephone inquiries regarding this communication should be directed to Petitions Attorney Steven Brantley at (571) 272-3203.

Charles Steven Brantley
Senior Petitions Attorney
Office of Petitions

UNITED STATES PATENT AND TRADEMARK OFFICE

Commissioner for Patents
United States Patent and Trademark Office
P.O. Box 1450
Alexandria, VA 22313-1450
www.uspto.gov

BOYLE FREDRICKSON NEWHOLM STEIN & GRATZ, S.C.
250 E. WISCONSIN AVENUE
SUITE 1030
MILWAUKEE, WI 53202

COPY MAILED

JUL 0 2 2007

OFFICE OF PETITIONS

In re Application of Thomas Richards	:	
Application No. 11/411,713	:	Decision According
Filed: April 26, 2006	:	Status Under 37 CFR 1.47(b)
Attorney Docket No. 1508.031	:	
For: Electronic Proximity Switch	:	

This is in response to the petition under 37 CFR 1.47(b), filed February 5, 2007.

The petition is **granted**.

The application and papers have been reviewed and found in compliance with 37 CFR 1.47(b). Therefore, this application is hereby accorded Rule 1.47(b) status.

As provided in Rule 1.47(c), this Office will forward notice of this application's filing to the non-signing inventor at the address given in the petition. Notice of the filing of this application will also be published in the Official Gazette.

The Office of Initial Patent Examination will be informed of the instant decision so that it may continue to prepare the application for examination.

Telephone inquiries regarding this communication should be directed to Petitions Attorney Steven Brantley at (571) 272-3203.

Charles Steven Brantley
Senior Petitions Attorney
Office of Petitions

UNITED STATES PATENT AND TRADEMARK OFFICE

UNITED STATES DEPARTMENT OF COMMERCE
United States Patent and Trademark Office
Address: COMMISSIONER FOR PATENTS
P.O. Box 1450
Alexandria, Virginia 22313-1450
www.uspto.gov

F. CHAU & ASSOCIATES, LLC
130 WOODBURY ROAD
WOODBURY, NY 11797

Mail Date: 04/21/2010

Applicant	: Dimitri Kanevsky	: DECISION ON REQUEST FOR
Patent Number	: 7607584	: RECALCULATION of PATENT
Issue Date	: 10/27/2009	: TERM ADJUSTMENT IN VIEW
Appliction No	: 11/411,716	: OF WYETH AND NOTICE OF INTENT TO
Filed	: 04/26/2006	: ISSUE CERTIFICATE OF CORRECTION
		:

The Request for Recalculation is **GRANTED** to the extent indicated.

The patent term adjustment has been determined to be **478** days. The USPTO will *sua sponte* issue a certificate of correction reflecting the amount of PTA days determined by the recalculation.

Prior to the issuance of the certificate of correction, the USPTO will afford patentee an opportunity to be heard and request reconsideration. Accordingly, patentee has **one month or thirty (30) days**, whichever is longer, to file a request for reconsideration of this patent term adjustment calculation. See 35 U.S.C. 154(b)(3)(B)(ii) and 37 CFR 1.322(a)(4). No extensions of time will be granted under 37 CFR 1.136.

Patentee should use document code PET.OP if electronically filing a request for reconsideration of this patent term adjustment calculation. The patentee must also include the information required by 37 CFR 1.705(b)(2) and the fee required by 37 CFR 1.18(e). If patentee does not file a timely request for reconsideration of this patent term adjustment calculation including the information required by 37 CFR 1.705(b)(2) and the fee required by 37 CFR 1.18(e), the USPTO will issue a certificate of correction reflecting the PTA determination noted above.

Patentee should be aware that in order to preserve the right to review in the United States District Court for the District of Columbia of the USPTO patent term adjustment determination, patentee must ensure that he or she also take the steps required under 35 U.S.C. 154(b)(4)(A) in a timely manner. Nothing in the request for recalculation should be construed as providing an alternative time frame for commencing a civil action under 35 U.S.C. 154(b)(4)(A).

Any questions concerning this decision should be directed to the Office of Patent Legal Administration at 571-272-7702.

UNITED STATES PATENT AND TRADEMARK OFFICE

Commissioner for Patents
United States Patent and Trademark Office
P.O. Box 1450
Alexandria, VA 22313-1450
www.uspto.gov

COPY MAILED

MAY 07 2007

OFFICE OF PETITIONS

DYKEMA GOSSETT PLLC
10 S. WACKER DR., STE. 2300
CHICAGO IL 60606

In re Application of :

MOLLISON, Karl W. et al. :
Application No. 11/11/411,734 : DECISION ON PETITION
Filed: April 25, 2006 : TO WITHDRAW
Attorney Docket No. **065379-0043 (619USC2** : FROM RECORD
:

This is a decision on the Request to Withdraw as attorney or agent of record under 37 C.F.R. § 1.36(b), filed January 31, 2007.

The request is **NOT APPROVED**.

A grantable request to withdraw as attorney/agent of record must be signed by every attorney/agent seeking to withdraw or contain a clear indication that one attorney is signing on behalf of another/others. A request to withdraw will not be approved unless at least 30 (thirty) days would remain between the date of approval and the later of the expiration date of a time to file a response or the expiration date of the maximum time period which can be extended under 37 C.F.R. § 1.136(a).

The request cannot be approved because no reasons for withdrawal have been provided. The Office cannot, at this time, determine whether practitioner's request is one of the mandatory or permissive reasons enumerated in 37 CFR 10.40. Any subsequent requests must include reasons for withdrawal. Please note that there is a space provided for on PTO/SB/83 (Request to Withdraw as Attorney or Agent) to supply practitioner's reasons.

All future communications from the Office will continue to be directed to the above-listed address until otherwise notified by applicant.

Telephone inquiries concerning this decision should be directed to Tredelle Jackson at 571-272- 2783.

Monica A. Graves
Petitions Examiner
Office of Petitions

cc: **KARL W. MOLLISON**
4020 NORTH HARVARD AVE.
ARLINGTON HEIGHTS, IL 60004

cc: **CAMERON KERRIGAN**
SQUIRE, SANDERS & DEMPSEY LLP
ONE MARITIME PLAZA
SUITE 300
SAN FRANCISCO, CA 94111-3492

UNITED STATES PATENT AND TRADEMARK OFFICE

Commissioner for Patents
United States Patent and Trademark Office
P.O. Box 1450
Alexandria, VA 22313-1450
www.uspto.gov

COPY MAILED

JUL 16 2007

OFFICE OF PETITIONS

DYKEMA GOSSETT PLLC
10 S. WACKER DR., STE. 2300
CHICAGO IL 60606

In re Application of :

MOLLISON, Karl W. et al. :
Application No. 11/411,734 : DECISION ON PETITION
Filed: April 25, 2006 : TO WITHDRAW
Attorney Docket No. **065379-0043 (619USC2)** : FROM RECORD
:

This is a decision on the Request to Withdraw as attorney or agent of record under 37 C.F.R. § 1.36(b), filed May 31, 2007.

The request is **APPROVED**.

A grantable request to withdraw as attorney/agent of record must be signed by every attorney/agent seeking to withdraw or contain a clear indication that one attorney is signing on behalf of another/others. A request to withdraw will not be approved unless at least 30 (thirty) days would remain between the date of approval and the later of the expiration date of a time to file a response or the expiration date of the maximum time period which can be extended under 37 C.F.R. § 1.136(a).

The request was signed Gregory M. Zinkl on behalf of all attorneys of record who are associated.
All attorneys/agents associated have been withdrawn. Applicant is reminded that there is no attorney of record at this time.

The request to change the correspondence of record is not acceptable as the requested correspondence address is not that of: (1) the first named signing inventor; or (2) an intervening assignee of the entire interest under 37 C.F.R 3.71. All future communications from the Office will be directed to the first named signing inventor at the first copied address below until otherwise properly notified by the applicant.

Telephone inquiries concerning this decision should be directed to Tredelle Jackson at 571-272-2783.

Monica A. Graves
Petitions Examiner
Office of Petitions

cc: **KARL W. MOLLISON**
4020 NORTH HARVARD AVE.
ARLINGTON HEIGHTS, IL 60004

cc: **CAMERON KERRIGAN**
ONE MARITIME PLAZA
SUITE 300
SAN FRANCISCO, 94111-3492

UNITED STATES PATENT AND TRADEMARK OFFICE

UNITED STATES DEPARTMENT OF COMMERCE
United States Patent and Trademark Office
Address: COMMISSIONER FOR PATENTS
P.O. Box 1450
Alexandria, Virginia 22313-1450
www.uspto.gov

WOOD, PHILLIPS, KATZ, CLARK & MORTIMER
500 W. MADISON STREET
SUITE 3800
CHICAGO, IL 60661

Mail Date: 04/21/2010

Applicant	: Karl Ostermann	: DECISION ON REQUEST FOR
Patent Number	: 7603828	: RECALCULATION of PATENT
Issue Date	: 10/20/2009	: TERM ADJUSTMENT IN VIEW
Appliction No	: 11/411,741	: OF WYETH AND NOTICE OF INTENT TO
Filed	: 04/26/2006	: ISSUE CERTIFICATE OF CORRECTION
		:

The Request for Recalculation is **GRANTED** to the extent indicated.

The patent term adjustment has been determined to be **0** days. The USPTO will *sua sponte* issue a certificate of correction reflecting the amount of PTA days determined by the recalculation.

Prior to the issuance of the certificate of correction, the USPTO will afford patentee an opportunity to be heard and request reconsideration. Accordingly, patentee has **one month or thirty (30) days**, whichever is longer, to file a request for reconsideration of this patent term adjustment calculation. See 35 U.S.C. 154(b)(3)(B)(ii) and 37 CFR 1.322(a)(4). No extensions of time will be granted under 37 CFR 1.136.

Patentee should use document code PET.OP if electronically filing a request for reconsideration of this patent term adjustment calculation. The patentee must also include the information required by 37 CFR 1.705(b)(2) and the fee required by 37 CFR 1.18(e). If patentee does not file a timely request for reconsideration of this patent term adjustment calculation including the information required by 37 CFR 1.705(b)(2) and the fee required by 37 CFR 1.18(e), the USPTO will issue a certificate of correction reflecting the PTA determination noted above.

Patentee should be aware that in order to preserve the right to review in the United States District Court for the District of Columbia of the USPTO patent term adjustment determination, patentee must ensure that he or she also take the steps required under 35 U.S.C. 154(b)(4)(A) in a timely manner. Nothing in the request for recalculation should be construed as providing an alternative time frame for commencing a civil action under 35 U.S.C. 154(b)(4)(A).

Any questions concerning this decision should be directed to the Office of Patent Legal Administration at 571-272-7702.

UNITED STATES PATENT AND TRADEMARK OFFICE

UNITED STATES DEPARTMENT OF COMMERCE
United States Patent and Trademark Office
Address: COMMISSIONER FOR PATENTS
P.O. Box 1450
Alexandria, Virginia 22313-1450
www.uspto.gov

WOOD, PHILLIPS, KATZ, CLARK & MORTIMER
500 W. MADISON STREET
SUITE 3800
CHICAGO, IL 60661

Mail Date: 04/21/2010

Applicant	: Roger Leyden	: DECISION ON REQUEST FOR
Patent Number	: 7628551	: RECALCULATION of PATENT
Issue Date	: 12/08/2009	: TERM ADJUSTMENT IN VIEW
Appliction No	: 11/411,743	: OF WYETH AND NOTICE OF INTENT TO
Filed	: 04/26/2006	: ISSUE CERTIFICATE OF CORRECTION
		:

The Request for Recalculation is **GRANTED** to the extent indicated.

The patent term adjustment has been determined to be **850** days. The USPTO will *sua sponte* issue a certificate of correction reflecting the amount of PTA days determined by the recalculation.

Prior to the issuance of the certificate of correction, the USPTO will afford patentee an opportunity to be heard and request reconsideration. Accordingly, patentee has **one month or thirty (30) days**, whichever is longer, to file a request for reconsideration of this patent term adjustment calculation. See 35 U.S.C. 154(b)(3)(B)(ii) and 37 CFR 1.322(a)(4). No extensions of time will be granted under 37 CFR 1.136.

Patentee should use document code PET.OP if electronically filing a request for reconsideration of this patent term adjustment calculation. The patentee must also include the information required by 37 CFR 1.705(b)(2) and the fee required by 37 CFR 1.18(e). If patentee does not file a timely request for reconsideration of this patent term adjustment calculation including the information required by 37 CFR 1.705(b)(2) and the fee required by 37 CFR 1.18(e), the USPTO will issue a certificate of correction reflecting the PTA determination noted above.

Patentee should be aware that in order to preserve the right to review in the United States District Court for the District of Columbia of the USPTO patent term adjustment determination, patentee must ensure that he or she also take the steps required under 35 U.S.C. 154(b)(4)(A) in a timely manner. Nothing in the request for recalculation should be construed as providing an alternative time frame for commencing a civil action under 35 U.S.C. 154(b)(4)(A).

Any questions concerning this decision should be directed to the Office of Patent Legal Administration at 571-272-7702.

UNITED STATES PATENT AND TRADEMARK OFFICE

UNITED STATES DEPARTMENT OF COMMERCE
United States Patent and Trademark Office
Address: COMMISSIONER FOR PATENTS
P.O. Box 1450
Alexandria, Virginia 22313-1450
www.uspto.gov

James R. Keogh
Medtronic, Inc.
710 Medtronic Parkway
Minneapolis, MN 55432

Mail Date: 07/26/2010

Applicant	: Timothy R. Ryan	: DECISION ON REQUEST FOR
Patent Number	: 7637944	: RECALCULATION of PATENT
Issue Date	: 12/29/2009	: TERM ADJUSTMENT IN VIEW
Application No	: 11/411,747	: OF WYETH
Filed	: 04/26/2006	:
		:

The Patentee's Request for Recalculation is **DISMISSED.**

This Request is deemed ineligible for consideration for one or more of the following reasons:

(A). The patent for which PTA recalculation is requested is either a design or reissue application or is a reexamination proceeding;

(B). The patent for which PTA recalculation is requested resulted from a utility or plant application filed under 35 USC 111(a) before May 29, 2000 and no CPA filed in the application on/after May 29, 2000;

(C). The patent for which PTA recalculation is requested resulted from an international application in which the international filing date was before May 29, 2000 and no CPA filed in the application on/after May 29, 2000;

(D). The patent for which PTA recalculation is requested issued on/after March 2, 2010;

(E). The Request for Recalculation was filed more than 180 days after the grant date of the patent and the request was not filed within two months of a dismissal of a request for reconsideration of the of the patent term under 37 CFR 1.705(d);

(F). The Request for Recalculation is not solely limited to USPTO pre-Wyeth interpretation of 35 U.S.C. 154(b)(2)(A);

or

(G). A civil action was filed pursuant to 35 U.S.C. 154(b)(4)(A)concerning the same patent at issue in this request.

Patentee may file a reply to this decision dismissing the Request for Recalculation. Patentee must file such reply within one month or thirty days, whichever is longer, of the mail date of the decision dismissing the Request for Recalculation. No fee is required if patentee is asserting in the reply that the dismissal for ineligibility is improper.

Patentee should use document code PET.OP if electronically filing a reply to this dismissal. If the USPTO finds that the request was improperly deemed ineligible, the USPTO will mail applicant a recalculation determination.

Patentee should be aware that in order to preserve the right to review in the United States District Court for the District of Columbia of the USPTO patent term adjustment determination, patentee must ensure that he or she also take the steps required under 35 U.S.C. 154(b)(4)(A). Nothing in the request for recalculation should be construed as providing an alternative time frame for commencing a civil action under 35 U.S.C. 154 (b)(4)(A).

Any questions concerning this decision should be directed to the Office of Patent Legal Administration at 571-272-7702.

UNITED STATES PATENT AND TRADEMARK OFFICE

Commissioner for Patents
United States Patent and Trademark Office
P.O. Box 1450
Alexandria, VA 22313-1450
www.uspto.gov

Thomas H. Close
Patent Legal Staff
Eastman Kodak Company
343 State Street
Rochester NY 14650-2201

COPY MAILED

NOV 21 2006

OFFICE OF PETITIONS

ON PETITION

In re Application of
Bryant et al.
Application No. 10/411,755
Filed: April 11, 2003
Title: Grouping Digital Images Using A Digital Camera

This is a decision on the petition under 37 CFR 1.181 to withdraw the holding of abandonment, filed October 2, 2006.

The petition to withdraw the holding of abandonment is **GRANTED**.

This application was held abandoned May 29, 2006 for failure to timely reply to the non-final Office Action mailed on February 28, 2006. The non-final Office Action set a three (3) month extendable time period for reply. A Notice of Abandonment was mailed September 12, 2006.

Petitioner asserts that a reply to the non-final Office Action and a three month extension of time were timely submitted on August 31, 2006 (certificate of mailing August 28, 2006). As evidence, petitioner has submitted a copy of the reply and a stamped postcard receipt. The reply also contains a certificate of mailing dated August 28, 2006 pursuant to 37 CFR 1.8. The post card receipt serves as prima facie evidence that a reply to the Office Action was received in the Office on August 31, 2006.

The response submitted on August 31, 2006 has been located in the Office.

The Notice of Abandonment is hereby vacated and the holding of abandonment is withdrawn.

The application file is being forwarded to Art Unit 2161 for further processing of the amendment.

Telephone inquiries concerning this matter should be directed to the undersigned at (571) 272-3215.

Charlema R. Grant

Charlema R. Grant
Petitions Attorney
Office of Petitions

UNITED STATES PATENT AND TRADEMARK OFFICE

UNITED STATES DEPARTMENT OF COMMERCE
United States Patent and Trademark Office
Address: COMMISSIONER FOR PATENTS
P.O. Box 1450
Alexandria, Virginia 22313-1450
www.uspto.gov

APPLICATION NO.	FILING DATE	FIRST NAMED INVENTOR	ATTORNEY DOCKET NO.	CONFIRMATION NO.
11/411,770	04/27/2006	Jae-seung Shim	Q91791	7630

7590 04/14/2008

SUGHRUE MION, PLLC
2100 PENNSYLVANIA AVENUE, N.W.
SUITE 800
WASHINGTON, DC 20037

EXAMINER	
OMETZ, DAVID LOUIS	
ART UNIT	**PAPER NUMBER**
2622	
MAIL DATE	**DELIVERY MODE**
04/14/2008	PAPER

DECISION GRANTING PETITION UNDER 37 CFR 1.138(d)

The declaration of express abandonment is recognized

This is in response to the petition under 37 CFR 1.138(d), requesting for a refund of any previously paid search fee and excess claims fee in the above-identified application.

The petition is granted.

The express abandonment is recognized. Any previously paid search fee and excess claims fee are hereby refunded.

Telephone inquiries should be directed to the Office of Data Management at (571) 272-4200.

Patent Publication Branch
Office of Data Management

Refund Ref:
04/14/2008 DTERRY 0000162234
CHECK Refund Total: $500.00

Adjustment date: 04/14/2008 DTERRY
04/28/2006 ZJUHAR1 00000084 11411770
02 FC:1111 -500.00 OP

UNITED STATES PATENT AND TRADEMARK OFFICE

UNITED STATES DEPARTMENT OF COMMERCE
United States Patent and Trademark Office
Address: COMMISSIONER FOR PATENTS
P.O. Box 1450
Alexandria, Virginia 22313-1450
www.uspto.gov

APPLICATION NO.	FILING DATE	FIRST NAMED INVENTOR	ATTORNEY DOCKET NO.	CONFIRMATION NO.
11/411,771	04/27/2006	Michael Brussermann	60497.000054	7608

21967 7590 11/04/2009

HUNTON & WILLIAMS LLP
INTELLECTUAL PROPERTY DEPARTMENT
1900 K STREET, N.W.
SUITE 1200
WASHINGTON, DC 20006-1109

EXAMINER	
BELLAMY, TAMIKO D	

ART UNIT	PAPER NUMBER
2856	

MAIL DATE	DELIVERY MODE
11/04/2009	PAPER

Please find below and/or attached an Office communication concerning this application or proceeding.

The time period for reply, if any, is set in the attached communication.

UNITED STATES PATENT AND TRADEMARK OFFICE

Commissioner for Patents
United States Patent and Trademark Office
P.O. Box 1450
Alexandria, VA 22313-1450
www.uspto.gov

HUNTON & WILLIAMS LLP
INTELLECTUAL PROPERTY DEPARTMENT
1900 K STREET, N.W., SUITE 1200
WASHINGTON, DC 20006-11

In re Application of:
BRUSSERMANN *et al.*
Serial No.: 11/411,771
Filed: April 27, 2006
Attorney Docket No.: **60497.000054**

DECISION ON PETITION

This is a decision on the petition filed August 25, 2009, for reimbursement of extension of time fees totaling $1,100.00. This petition has also been treated as a petition to reset the period of reply, and a petition to accept the response filed August 24, 2009 as a timely response to the outstanding Office action, both under 37 C.F.R. § 1.181. No fee is required.

The petition is **GRANTED.**

Petitioner asserts that the final Office action mailed on February 25, 2009, was not received. Petitioner further asserts that they first became aware of the outstanding Office action on August 17, 2009, through a review of the PAIR record for the application file. In support of the petition, petitioner provided a statement attesting that a search of the file jacket and docket records showed that the Office action was not received. A copy of the file docket where the Office action would have been entered was provided to support the petition.

A review of the written record indicates no irregularity in the mailing of the Office action, and in the absence of any irregularity there is a strong presumption that the Office action was properly mailed to practitioner at the address of record. This presumption may be overcome by a showing that the Office action was not in fact received. The showing required to establish the failure to receive an Office action must include a statement from the practitioner stating that the Office action was not received by the practitioner, and attesting to the fact that a search of the file jacket and docket records indicates that the Office action was not received. A copy of the docket record where the non-received Office action would have been entered had it been received and docketed must be attached to and referenced in practitioner's statement. See "Withdrawing the Holding of Abandonment When Office Actions Are Not Received" 1156 Official Gazette 53 (November 16, 1993) and M.P.E.P. § 711.03(c).

The petition and accompanying evidence provides a sufficient showing that the practitioner did not receive the Office action mailed on February 25, 2009. Accordingly, the petition is granted.

For the above stated reason, the period for reply to the Office action mailed February 25, 2009, has been reset to run from August 17, 2009, the date the action was viewed on PAIR. Therefore, the response filed August 24, 2009, was timely filed without the need for extensions of time. The extensions of time totaling $1,100.00, were paid in excess, and will be refunded.

The Technology Center 2800 support staff will enter the response, and notify the examiner that it is ready for consideration.

Inquiries regarding this decision should be directed to Clayton E. LaBalle at (571) 272-1594.

John W. Cabeca, Director
Technology Center 2800
Semiconductors, Electrical and Optical
Systems and Components

UNITED STATES PATENT AND TRADEMARK OFFICE

Commissioner for Patents
United States Patent and Trademark Office
P.O. Box 1450
Alexandria, VA 22313-1450
www.uspto.gov

MCDERMOTT WILL & EMERY LLP
600 13TH STREET, N.W.
WASHINGTON, DC 2005-3096

MAILED

MAY 10 2010

OFFICE OF PETITIONS

In re Application of :
CHRISTOPHER HAL SALTER :
Application No. 11/411,835 : DECISION ON PETITION
Filed: April 27, 2006 : TO WITHDRAW
Attorney Docket No. **3017.2.3cp** : FROM RECORD
:

This is a decision on the Request to Withdraw as attorney or agent of record under 37 CFR. § 1.36(b), filed March 18, 2010.

The request is **NOT APPROVED** as moot.

A review of the file record indicates that the power of attorney to attorneys/agents associated with Customer Number 20277 has been revoked by the applicants of the patent application on April 14, 2010. Accordingly, the request to withdraw under 37 CFR § 1.36(b) is moot.

All future communications from the Office will continue to be directed to the below-listed address until otherwise notified by applicant.

Telephone inquires concerning this decision should be directed to the undersigned at 571-272-4584.

/JoAnne Burke/
JoAnne Burke
Petitions Examiner
Office of Petitions

cc: Jason P. Webb
8841 S Redwood Rd
Suite C
West Jordan UT 84088

UNITED STATES PATENT AND TRADEMARK OFFICE

UNITED STATES DEPARTMENT OF COMMERCE
United States Patent and Trademark Office
Address: COMMISSIONER FOR PATENTS
P.O. Box 1450
Alexandria, Virginia 22313-1450
www.uspto.gov

APPLICATION NO.	FILING DATE	FIRST NAMED INVENTOR	ATTORNEY DOCKET NO.	CONFIRMATION NO.
11/411,839	04/27/2006	Jerry M. Couretas	127203	7253

25944 7590 12/24/2009

OLIFF & BERRIDGE, PLC
P.O. BOX 320850
ALEXANDRIA, VA 22320-4850

EXAMINER	
PROCTOR, JASON SCOTT	
ART UNIT	PAPER NUMBER
2123	

MAIL DATE	DELIVERY MODE
12/24/2009	PAPER

Please find below and/or attached an Office communication concerning this application or proceeding.

The time period for reply, if any, is set in the attached communication.

UNITED STATES PATENT AND TRADEMARK OFFICE

Commissioner for Patents
United States Patent and Trademark Office
P.O. Box 1450
Alexandria, VA 22313-1450
www.uspto.gov

OLIFF & BERRIDGE, PLC
P.O. BOX 320850
ALEXANDRIA VA 22320-4850

In re Application of:
Jerry M. Couretas et al.
Application No. 11/411,839
Filed: April 27, 2006
For: SYSTEM AND METHOD FOR EVALUATING SYSTEM ARCHITECTURES

DECISION ON PETITION TO RESET PERIOD FOR REPLY TO OFFICE ACTION

This is a decision on the petition filed on August 27, 2009 requesting re-mailing of the final Office action mailed on June 4, 2009 and reset the period of reply because the applicant did not receive the Office communication mailed on June 4, 2009 at the correspondence address of record.

In support of the petition, Petitioner provided the following:

i) a statement that the Office communication in question apparently was not received by Applicant's representatives (Oliff & Berridge, PLC)at the correspondence address of record , and that the Office action was first discovered during a routine status check of the above application via PAIR at the Patent Office's website on August 24, 2009.

ii) a printout from a docketing system maintained by the above law firm printed on August 24, 2009 in support of petitioner's assertion that the above-mentioned office action was never received by the above law firm.

iii) a photocopy of the date stamped copy of the Office action printed off PAIR.

Petitioner requests that the period for reply to the Office Action of June 4, 2009 be reset to begin from August 24, 2009.

REGULATIONS AND PRACTICE

In the absence of any apparent irregularities associated with the mailing of an Office communication, the Office presumes that the communication was properly mailed to the address of record. This presumption may be overcome by showing that the Office communication was not received at the correspondence address of record.

The guidance regarding establishment of nonreceipt of Office actions is set forth in MPEP 711.03(c), which states in part:

The showing required to establish nonreceipt of an Office communication must include a statement from the practitioner describing the system used for recording an Office action received at the correspondence address of record with the USPTO. The statement should establish that the docketing system is sufficiently reliable. It is expected that the record would include, but not be limited to, the application number, attorney docket number, the mail date of the Office action and the due date for the response.

Practitioner must state that the Office action was not received at the correspondence address of record, and that a search of the practitioner's record(s), including any file jacket or the equivalent, and the application contents, indicates that the Office action was not received. A copy of the record(s) used by the practitioner where the non-received Office action would have been entered had it been received is required.

A copy of the practitioner's record(s) required to show non-receipt of the Office action should include the master docket for the firm. That is, if a three month period for reply was set in the nonreceived Office action, a copy of the master docket report showing all replies docketed for a date three months from the mail date of the nonreceived Office action must be submitted as documentary proof of nonreceipt of the Office action. ***If no such master docket exists, the practitioner should so state and provide other evidence*** such as, but not limited to, the following: the application file jacket; incoming mail log; calendar; reminder system; or the individual docket record for the application in question.

DECISION

The exhibits show for the record the docketing system used by the above law firm for recording an Office action received at the correspondence address of record with the USPTO. The printout shows the application number and any response due at the Office, presumably after receiving a correspondence from the Office, for a number of applications with responses due on Septeber 4, 2009, the date the statutory period for response set forth in the June 4 Office action was to expire. The exhibits provide descriptive evidence that the applicant's docketing system did not receive or process the Final office action mailed June 4, 2009.

The petition is GRANTED.

The shortened statutory period that was originally set forth in the Office communication shall be reset to run from August 24, the day the Office action was discovered by the Applicant's representative. Extension of time may be available under 37 CFR 1.136(a).

/Kakali Chaki/

Kakali Chaki
Quality Assurance Specialist
Technology Center 2100

UNITED STATES PATENT AND TRADEMARK OFFICE

UNITED STATES DEPARTMENT OF COMMERCE
United States Patent and Trademark Office
Address: COMMISSIONER FOR PATENTS
P.O. Box 1450
Alexandria, Virginia 22313-1450
www.uspto.gov

APPLICATION NO.	FILING DATE	FIRST NAMED INVENTOR	ATTORNEY DOCKET NO.	CONFIRMATION NO.
11/411,851	04/27/2006	Tim Reddin	200504954-1	7383

7590 05/08/2008

HEWLETT PACKARD COMPANY
P O BOX 272400, 3404 E. HARMONY ROAD
INTELLECTUAL PROPERTY ADMINISTRATION
FORT COLLINS, CO 80527-2400

EXAMINER	
BEAUSOLIEL JR, ROBERT W	

ART UNIT	PAPER NUMBER
2113	

NOTIFICATION DATE	DELIVERY MODE
05/08/2008	ELECTRONIC

DECISION GRANTING PETITION UNDER 37 CFR 1.138(d)

The declaration of express abandonment is recognized

This is in response to the petition under 37 CFR 1.138(d), requesting for a refund of any previously paid search fee and excess claims fee in the above-identified application.

The petition is granted.

The express abandonment is recognized. Any previously paid search fee and excess claims fee are hereby refunded.

Telephone inquiries should be directed to the Office of Data Management at (571) 272-4200.

Patent Publication Branch
Office of Data Management

Adjustment date: 05/16/2008 NFARMER
05/01/2006 EHAILE1 00000026 082025 11411851
02 FC:1111 500.00 CR
04 FC:1202 50.00 CR

UNITED STATES PATENT AND TRADEMARK OFFICE

Commissioner for Patents
United States Patent and Trademark Office
P.O. Box 1450
Alexandria, VA 22313-1450
www.uspto.gov

JAGTIANI + GUTTAG
10363-A DEMOCRACY LANE
FAIRFAX, VA 22030

COPY MAILED

MAR 2 4 2009

OFFICE OF PETITIONS

In re Application of :
Joseph Bachir JONES :
Application No. 11/411,858 : DECISION ON PETITION
Filed: April 27, 2006 : TO WITHDRAW
Attorney Docket No. DHIN-0005-UT1 FROM RECORD
:

This is a decision on the Request to Withdraw as attorney or agent of record under 37 C.F.R. § 1.36(b), filed November 13, 2008.

The request is **NOT APPROVED**.

A grantable request to withdraw as attorney/agent of record must be signed by every attorney/agent seeking to withdraw or contain a clear indication that one attorney is signing on behalf of another/others. The Office requires the practitioner(s) requesting withdrawal to certify that he, she, or they have: (1) given reasonable notice to the client, prior to the expiration of the response period, that the practitioner(s) intends to withdraw from employment; (2) delivered to the client or a duly authorized representative of the client all papers and property (including funds) to which the client is entitled; and (3) notified the client of any responses that may be due and the time frame within which the client must respond, pursuant 37 CFR 10.40(c).

The request cannot be approved because the attorneys of record were appointed by customer number.

All future communications from the Office will continue to be directed to the above-listed address until otherwise notified by applicant.

Telephone inquiries concerning this decision should be directed to the undersigned at 571-272-6735.

Diane Goodwyn
Petitions Examiner
Office of Petitions

UNITED STATES PATENT AND TRADEMARK OFFICE

UNITED STATES DEPARTMENT OF COMMERCE
United States Patent and Trademark Office
Address: COMMISSIONER FOR PATENTS
P.O. Box 1450
Alexandria, Virginia 22313-1450
www.uspto.gov

VENABLE LLP
P.O. BOX 34385
WASHINGTON, DC 20043-9998

Mail Date: 04/21/2010

Applicant	: Franz-Josef Minter	: DECISION ON REQUEST FOR
Patent Number	: 7603750	: RECALCULATION of PATENT
Issue Date	: 10/20/2009	: TERM ADJUSTMENT IN VIEW
Appliction No	: 11/411,862	: OF WYETH AND NOTICE OF INTENT TO
Filed	: 04/27/2006	: ISSUE CERTIFICATE OF CORRECTION
		:

The Request for Recalculation is **GRANTED** to the extent indicated.

The patent term adjustment has been determined to be **764** days. The USPTO will *sua sponte* issue a certificate of correction reflecting the amount of PTA days determined by the recalculation.

Prior to the issuance of the certificate of correction, the USPTO will afford patentee an opportunity to be heard and request reconsideration. Accordingly, patentee has **one month or thirty (30) days**, whichever is longer, to file a request for reconsideration of this patent term adjustment calculation. See 35 U.S.C. 154(b)(3)(B)(ii) and 37 CFR 1.322(a)(4). No extensions of time will be granted under 37 CFR 1.136.

Patentee should use document code PET.OP if electronically filing a request for reconsideration of this patent term adjustment calculation. The patentee must also include the information required by 37 CFR 1.705(b)(2) and the fee required by 37 CFR 1.18(e). If patentee does not file a timely request for reconsideration of this patent term adjustment calculation including the information required by 37 CFR 1.705(b)(2) and the fee required by 37 CFR 1.18(e), the USPTO will issue a certificate of correction reflecting the PTA determination noted above.

Patentee should be aware that in order to preserve the right to review in the United States District Court for the District of Columbia of the USPTO patent term adjustment determination, patentee must ensure that he or she also take the steps required under 35 U.S.C. 154(b)(4)(A) in a timely manner. Nothing in the request for recalculation should be construed as providing an alternative time frame for commencing a civil action under 35 U.S.C. 154(b)(4)(A).

Any questions concerning this decision should be directed to the Office of Patent Legal Administration at 571-272-7702.

UNITED STATES PATENT AND TRADEMARK OFFICE

UNITED STATES DEPARTMENT OF COMMERCE
United States Patent and Trademark Office
Address: COMMISSIONER FOR PATENTS
P.O. Box 1450
Alexandria, Virginia 22313-1450
www.uspto.gov

KNOBLE, YOSHIDA & DUNLEAVY
EIGHT PENN CENTER
SUITE 1350, 1628 JOHN F KENNEDY BLVD
PHILADELPHIA, PA 19103

Mail Date: 04/21/2010

Applicant	: David Heisner	: DECISION ON REQUEST FOR
Patent Number	: 7631775	: RECALCULATION of PATENT
Issue Date	: 12/15/2009	: TERM ADJUSTMENT IN VIEW
Appliction No	: 11/411,914	: OF WYETH AND NOTICE OF INTENT TO
Filed	: 04/27/2006	: ISSUE CERTIFICATE OF CORRECTION
		:

The Request for Recalculation is **GRANTED** to the extent indicated.

The patent term adjustment has been determined to be **548** days. The USPTO will *sua sponte* issue a certificate of correction reflecting the amount of PTA days determined by the recalculation.

Prior to the issuance of the certificate of correction, the USPTO will afford patentee an opportunity to be heard and request reconsideration. Accordingly, patentee has **one month or thirty (30) days**, whichever is longer, to file a request for reconsideration of this patent term adjustment calculation. See 35 U.S.C. 154(b)(3)(B)(ii) and 37 CFR 1.322(a)(4). No extensions of time will be granted under 37 CFR 1.136.

Patentee should use document code PET.OP if electronically filing a request for reconsideration of this patent term adjustment calculation. The patentee must also include the information required by 37 CFR 1.705(b)(2) and the fee required by 37 CFR 1.18(e). If patentee does not file a timely request for reconsideration of this patent term adjustment calculation including the information required by 37 CFR 1.705(b)(2) and the fee required by 37 CFR 1.18(e), the USPTO will issue a certificate of correction reflecting the PTA determination noted above.

Patentee should be aware that in order to preserve the right to review in the United States District Court for the District of Columbia of the USPTO patent term adjustment determination, patentee must ensure that he or she also take the steps required under 35 U.S.C. 154(b)(4)(A) in a timely manner. Nothing in the request for recalculation should be construed as providing an alternative time frame for commencing a civil action under 35 U.S.C. 154(b)(4)(A).

Any questions concerning this decision should be directed to the Office of Patent Legal Administration at 571-272-7702.

UNITED STATES PATENT AND TRADEMARK OFFICE

Commissioner for Patents
United States Patent and Trademark Office
P.O. Box 1450
Alexandria, VA 22313-1450
www.uspto.gov

COPY MAILED

AUG 24 2006

OFFICE OF PETITIONS

C. IRVIN MCCLELLAND
OBLON, SPIVAK, MCCLELLAND, MAIER & NEUSTADT, P.C.
1940 DUKE STREET
ALEXANDRIA VA 22314

In re Application of :
Claude McFarlane :
Application No. 11/411,943 : ON PETITION
Deposited: April 27, 2006 :
Attorney Docket No.: 283002US41 :
Title: Cutting Knife with Inserts :
and Method of Manufacture Thereof :
:

This is a decision on the petition to accord a filing date submitted July 3, 2006 requesting that the above-identified application be accorded a filing date of April 27, 2006.

Application papers in the above-identified application were deposited on April 27, 2006. However, on May 31, 2006 the Office of Initial Patent Examination mailed a "Notice of Incomplete Nonprovisional Application", notifying applicant that the application papers had not been accorded a filing date because the application was deposited without drawings.[1]

In response, 4 sheets of drawings, including figure 1-4 and the present petition were filed on July 3, 2006. The petition contends that the application as filed contained 4 sheets of drawings and was described in the original filed specification. In support, the petition is accompanied by a copy of applicant's postcard receipt which acknowledges

[1] See 35 U.S.C. 111(a)(4)

Applicant's postcard receipt is prima facie[2] evidence that the drawings were received on April 27, 2006. A review of Office records shows the copy of the 4 sheets of drawings submitted on April 27, 2006 containing figures 1-4 have not been located.

Since the original drawings cannot be located in the Office, the copy of the drawings supplied on July 3, 2006, will be used for processing and examination purposes.

The petition is **Granted**. The petition fee will be refunded.

The application will be returned to the Office of Initial Patent Examination for further processing with a **filing date of April 27, 2006**, using the 4 sheets of drawings supplied on July 3, 2006.

Telephone inquiries related to this decision may be directed to the undersigned at(571) 272-3215.

Charlema R. Grant
Petition Attorney
Office of Petitions

[2]A postcard receipt which itemizes and properly identifies the items which are being filed serves as prima facie evidence of receipt in the office of all items listed thereon. See MPEP 503.

UNITED STATES PATENT AND TRADEMARK OFFICE

Commissioner for Patents
United States Patent and Trademark Office
P.O. Box 1450
Alexandria, VA 22313-1450
www.uspto.gov

OBLON, SPIVAK, MCCLELLAND MAIER & NEUSTADT, P.C.
1940 DUKE STREET
ALEXANDRIA VA 22314

In re Application of:
MCFARLANE, CLAUDE
Serial No. 11/411,943
Filed: Apr. 27, 2006
Docket: 283002US41
Title: CUTTING KNIFE WITH INSERTS AND METHOD OF MANUFACTURE THEREOF

2/19/09

DECISION ON PETITION
UNDER 37 CFR § 1.144

This is a decision on the petition filed February 4, 2009 under 37 CFR 1.181 requesting withdrawal of the restriction requirement of October 2, 2008 by rejoining claims 2, 6-25 and 27-34. This petition is being considered pursuant to 37 CFR § 1.144 and 37 CFR § 1.181, and no fee is required.

The petition is **granted.**

In finding petitioner's points of argument persuasive, the requested relief is granted. The restriction requirement with respect to claims 1-34 mailed on Oct. 2, 2008 is withdrawn. Claims 2, 6-25 and 27-34 will be rejoined with the elected invention as claimed in claims 1, 3-5 and 26. The examiner has been directed to issue an Office action to treat claims 2, 6-25 and 27-34 on the merits.

The application is being forwarded to Supervisory Patent Examiner of Art Unit 3724 for the examiner's preparation of an Office action not inconsistent with this decision. Any inquiry regarding this decision should be directed to Henry C. Yuen, Special Programs Examiner, at (571) 272-4856.

PETITION GRANTED.

Donald T. Hajec, Director
Technology Center 3700

UNITED STATES PATENT AND TRADEMARK OFFICE

Commissioner for Patents
United States Patent and Trademark Office
P.O. Box 1450
Alexandria, VA 22313-1450
www.uspto.gov

FOLEY AND LARDNER LLP
SUITE 500
3000 K STREET NW
WASHINGTON DC 20007

MAILED

JUL 16 2010

OFFICE OF PETITIONS

In re Patent No. 7,623,702
Arata, et al.
Issue Date: November 24, 2009
Application No. 11/411,951
Filed: April 27, 2006
Atty Docket No. **051892-0233**

: DECISION ON REQUEST
: FOR
: RECONSIDERATION OF
: PATENT TERM ADJUSTMENT
: and
: NOTICE OF INTENT TO ISSUE
: CERTIFICATE OF CORRECTION

This is a decision on the petition filed on January 20, 2010, which is being treated as a petition under 37 CFR 1.705(d) requesting that the patent term adjustment indicated on the above-identified patent be corrected to indicate that the term of the above-identified patent is extended or adjusted by eight hundred eighty-one (881) days.

The petition to correct the patent term adjustment indicated on the above-identified patent to indicate that the term of the above-identified patent is extended or adjusted by eight hundred eighty-one (881) days is **GRANTED**.

The Office acknowledges receipt of $200.00 for the fee set forth in 37 CFR 1.18(e). No additional fees are required.

The Office will *sua sponte* issue a certificate of correction. Pursuant to 37 CFR 1.322, the Office will not issue a certificate of correction without first providing assignee or patentee an opportunity to be heard. Accordingly, patentee is given **one (1) month or thirty (30) days**, whichever is longer, from the mail date of this decision to respond. No extensions of time will be granted under § 1.136.

Nothing in this decision shall be construed as a waiver of the requirement of 35 U.S.C. 154(b)(4) that any civil action by an applicant dissatisfied with a determination made by the Director under 35 U.S.C. 154(b)(3) be filed in the United States District Court for the District of Columbia within 180 days after the grant of the patent.

The application is being forwarded to the Certificates of Correction Branch for issuance of a certificate of correction. The Office will issue a certificate of correction indicating that the term of the above-identified patent is extended or adjusted by **eight hundred eighty-one (881) days**.

Telephone inquiries specific to this matter should be directed to the undersigned, at (571) 272-3222.

/Kenya A. McLaughlin/

Kenya A. McLaughlin
Petitions Attorney
Office of Petitions

Enclosure: Copy of DRAFT Certificate of Correction

DRAFT COPY

UNITED STATES PATENT AND TRADEMARK OFFICE

CERTIFICATE OF CORRECTION

PATENT : 7,623,702 B2

DATED : Nov. 24, 2009

INVENTOR(S) : Arata et al.

It is certified that error appears in the above-identified patent and that said Letters Patent is hereby corrected as shown below:

On the cover page,

[*] Notice: Subject to any disclaimer, the term of this patent is extended or adjusted under 35 USC 154(b) by (686) days

Delete the phrase "by 686 days" and insert – by 881 days--

UNITED STATES PATENT AND TRADEMARK OFFICE

COMMISSIONER FOR PATENTS
UNITED STATES PATENT AND TRADEMARK OFFICE
P.O. BOX 1450
ALEXANDRIA, VA 22313-1450
WWW.USPTO.GOV

Paper No. None

NEIL K. NYDEGGER
NYDEGGER & ASSOCIATES
348 Olive Street
San Diego CA 92103

COPY MAILED

DEC 11 2006

OFFICE OF PETITIONS

In re Application of	:	
Jay S. Means and Joseph F.	:	
Nebolon	:	
Application No. 11/411,976	:	DECISION ON PETITION UNDER
Filed: April 26, 2006	:	37 C.F.R. §1.47(A)
Attorney Docket No. 11422.4	:	
Title: BRAKING SHELL FOR	:	
SHOPPING CART SECURITY DEVICE	:	

This is in response to the petition under 37 C.F.R. §1.47(a)[1], filed August 18, 2006.

On April 26, 2006, the application was filed, identifying Jay S. Means and Joseph F. Nebolon as joint inventors. The application was deposited without an oath or declaration. On May 18, 2006, a "Notice to File Missing Parts of Nonprovisional Application - Filing Date Granted" (Notice) was mailed, notifying applicant

1 A grantable petition under 37 C.F.R. §1.47(a) requires:
(1) the petition fee of $200;
(2) a surcharge of either $65 or $130, if the petition is not filed at the time of filing the application, as set forth in 37 CFR § 1.16(f);
(3) a statement of the last known address of the non-signing inventors;
(4) proof that either:
a) a copy of the entire application (specification, claims, drawings, and the oath or declaration) was sent or given to the non-signing inventor for review and proof that the non-signing inventor refuses to join in the application, or
b) the non-signing inventor cannot be found or reached after diligent effort, and a statement that these efforts were not successful;
(5) a declaration which complies with 37 CFR §1.63.

that a fully executed oath or declaration and the associated surcharge were required. This Notice set a two-month period for reply, and further indicated that the filing fee, replacement drawings, the search fee, and the examination fee would be required.

With the present petition, Petitioner has submitted the petition fee, the surcharge associated with the late submission of an oath or declaration, the search fee, the filing fee, the examination fee, replacement drawings, a declaration which has been executed by Mr. Nebolon, and a one-month extension of time to make timely this response.

Petitioner has met each of the five requirements of Rule §1.47(a), and has submitted all required fees. Therefore, the petition is **GRANTED** and this application is hereby accorded Rule §1.47(a) status.

As provided in Rule §1.47(a), this Office will forward notice of this application's filing to the non-signing inventor at the address given on the declaration. Notice of the filing of this application will also be published in the Official Gazette.

The Office of Initial Patent Examination (OIPE) will be notified of this decision so that the application may receive further processing.

Telephone inquiries regarding *this decision* should be directed to the undersigned at (571) 272-3225[2]. All other inquiries concerning examination procedures or status of the application should be directed to the Technology Center.

Paul Shanoski
Senior Attorney
Office of Petitions
United States Patent and Trademark Office

---

2 Petitioner will note that all practice before the Office should be in writing, and the action of the Office will be based exclusively on the written record in the Office. See 37 C.F.R. §1.2. As such, Petitioner is reminded that no telephone discussion may be controlling or considered authority for Petitioner's further action(s).

UNITED STATES PATENT AND TRADEMARK OFFICE

Commissioner for Patents
United States Patent and Trademark Office
P.O. Box 1450
Alexandria, VA 22313-1450
www.uspto.gov

DAVIS & BUJOLD, P.L.L.C.
112 PLEASANT STREET
CONCORD, NH 03301

COPY MAILED
NOV 02 2006
OFFICE OF PETITIONS

In re Application of :
Lizotte et al. :
Application No. 11/411,977 :
Filed: 04/26/2006 : ON PETITION
Title of Invention: INSPECTION :
METHOD AND APPARATUS FOR :
PARTIALLY DRILLED MICROVIAS :

This is a decision on the correspondence filed July 20, 2006, entitled "Response to Notice to File Missing Parts of Nonprovisional Application-Filing Date Granted". With the response Applicant files a preliminary amendment to add omitted Figure 22, on the basis that Figure 22 is not new matter. The response is properly treated as a petition under 37 CFR 1.182 as explained below.

Background

The application was filed on April 26, 2006. On May 18, 2006, the Office of Initial Patent Examination mailed a Notice to File Missing Parts of Nonprovisional Application-Filing (hereinafter "Notice") stating that the application had been accorded a filing date; however, Figure 22 described in the specification appeared to have been omitted from the application.

Applicant responds with the instant petition and preliminary amendment to add the omitted Figure 22.

The Notice

As provided in the Notice and the MPEP

> The mailing of a "Notice of Omitted Items" will permit the applicant to either: (A) promptly establish prior receipt in the USPTO of the page(s) at issue (generally by way of a date-stamped itemized postcard receipt (MPEP § 503)); or (B) promptly submit the omitted page(s) in a nonprovisional application and

> accept the date of such submission as the application filing date. An applicant asserting that the page(s) was in fact deposited in the USPTO with the application papers must, within 2 months from the date of the "Notice of Omitted Item(s)", file a petition under 37 CFR 1.53(e) with the petition fee set forth in 37 CFR 1.17(f), along with evidence of such deposit (37 CFR 1.181(f)). The petition fee will be refunded if it is determined that the page(s) was in fact received by the USPTO with the application papers deposited on filing. An applicant desiring to submit the omitted page(s) in a nonprovisional application and accept the date of such submission as the application filing date must, within 2 months from the date of the "Notice of Omitted Item(s)," file any omitted page(s) with an oath or declaration in compliance with 37 CFR 1.63 and 37 CFR 1.64 referring to such page(s) and a petition under 37 CFR 1.182 with the petition fee set forth in 37 CFR 1.17(f), requesting the later filing date (37 CFR 1.181(f)).

MPEP 601.01(d)

Analysis and conclusion

In this instance, Applicant neither asserts that the Figure(s) was in fact deposited in the USPTO with the application papers, nor request that the Office accept the omitted Figure and accept the date of such submission as the application filing date.

The MPEP further provides that

> An applicant willing to accept the application as deposited in the USPTO need not respond to the "Notice of Omitted Items," and the failure to file a petition under 37 CFR 1.53(e) or 37 CFR 1.182 (and the required petition fee) as discussed above within 2 months of the date of the "Notice of Omitted Item(s)" (37 CFR 1.181(f)) will be treated as constructive acceptance by applicant of the application as deposited in the USPTO. Amendment of the specification is required in a nonprovisional application to renumber the pages consecutively and cancel any incomplete sentences caused by the absence of the omitted page(s). Such amendment should be by way of preliminary amendment submitted prior to the first Office action to avoid delays in the prosecution of the application.

Id.

Here, Applicant has in fact responded to the Notice and filed a preliminary amendment. As such, the response is treated as a

petition under 37 CFR 1.182 to establish receipt in the Office of the drawing Figure, and is **dismissed**.

The issue of new matter is appropriately addressed by the Examiner.

The petition fee has been charged to deposit account 04-0213 as authorized in the instant petition.

The application will be returned to the Office of Initial Patent Examination for further processing with a filing date of April 26, 2006, using the application papers filed on that date.

Telephone inquiries concerning this matter should be directed to the undersigned at (571) 272-3232.

Derek L. Woods
Attorney
Office of Petitions

UNITED STATES PATENT AND TRADEMARK OFFICE

Commissioner for Patents
United States Patent and Trademark Office
P.O. Box 1450
Alexandria, VA 22313-1450
www.uspto.gov

COPY MAILED

MAY 27 2008

OFFICE OF PETITIONS

Townsend and Townsend and Crew, LLP
Two Embarcadero Center
Eighth Floor
San Francisco, CA 94111-3834

In re Application of :
Victor B. Kley :
Application No. 11/411,985 : DECISION ON PETITION
Filed: April 25, 2006 : TO WITHDRAW
Attorney Docket No. 020921-001613US : FROM RECORD
:

This is a decision on the Request to Withdraw as attorney or agent of record under 37 C.F.R. § 1.36(b), filed March 20, 2008.

The request is **NOT APPROVED**.

A grantable request to withdraw as attorney/agent of record must be signed by every attorney/agent seeking to withdraw or contain a clear indication that one attorney is signing on behalf of another/others. A request to withdraw will not be approved unless at least 30 (thirty) days would remain between the date of approval and the later of the expiration date of a time to file a response or the expiration date of the maximum time period which can be extended under 37 C.F.R. § 1.136(a).

The request cannot be approved because no reasons for withdrawal have been provided. The Office cannot, at this time, determine whether practitioner's request is one of the mandatory or permissive reasons enumerated in 37 CFR 10.40. Any subsequent requests must include reasons for withdrawal. Please note that there is a space provided for on PTO/SB/83 (Request to Withdraw as Attorney or Agent) to supply practitioner's reasons.

A courtesy copy of this decision is being mailed to the first named signing inventor. A courtesy copy is being mailed to the address noted in the request. If the attorneys with this firm desire to receive future communication concerning this application, the proper power of attorney documents should be submitted.

All future communications from the Office will continue to be directed to the above-listed address until otherwise notified by applicant.

Telephone inquiries concerning this decision should be directed to Kimberly Inabinet at 571-272- 4618.

Kimberly Inabinet
Petitions Examiner
Office of Petitions

cc: Victor B. Kley
1119 Park Hills Road
Berkeley, CA 94708

cc: Thomas Lester Wallace
P.O. Box 587
Sunol, CA 94586

UNITED STATES PATENT AND TRADEMARK OFFICE

UNITED STATES DEPARTMENT OF COMMERCE
United States Patent and Trademark Office
Address: COMMISSIONER FOR PATENTS
P.O. Box 1450
Alexandria, Virginia 22313-1450
www.uspto.gov

NUTTER MCCLENNEN & FISH LLP
SEAPORT WEST
155 SEAPORT BOULEVARD
BOSTON, MA 02210-2604

Mail Date: 04/20/2010

Applicant	: Scott A. Thieret	: DECISION ON REQUEST FOR
Patent Number	: 7623732	: RECALCULATION of PATENT
Issue Date	: 11/24/2009	: TERM ADJUSTMENT IN VIEW
Appliction No	: 11/411,999	: OF WYETH AND NOTICE OF INTENT TO
Filed	: 04/26/2006	: ISSUE CERTIFICATE OF CORRECTION
		:

The Request for Recalculation is **GRANTED** to the extent indicated.

The patent term adjustment has been determined to be **796** days. The USPTO will *sua sponte* issue a certificate of correction reflecting the amount of PTA days determined by the recalculation.

Prior to the issuance of the certificate of correction, the USPTO will afford patentee an opportunity to be heard and request reconsideration. Accordingly, patentee has **one month or thirty (30) days**, whichever is longer, to file a request for reconsideration of this patent term adjustment calculation. See 35 U.S.C. 154(b)(3)(B)(ii) and 37 CFR 1.322(a)(4). No extensions of time will be granted under 37 CFR 1.136.

Patentee should use document code PET.OP if electronically filing a request for reconsideration of this patent term adjustment calculation. The patentee must also include the information required by 37 CFR 1.705(b)(2) and the fee required by 37 CFR 1.18(e). If patentee does not file a timely request for reconsideration of this patent term adjustment calculation including the information required by 37 CFR 1.705(b)(2) and the fee required by 37 CFR 1.18(e), the USPTO will issue a certificate of correction reflecting the PTA determination noted above.

Patentee should be aware that in order to preserve the right to review in the United States District Court for the District of Columbia of the USPTO patent term adjustment determination, patentee must ensure that he or she also take the steps required under 35 U.S.C. 154(b)(4)(A) in a timely manner. Nothing in the request for recalculation should be construed as providing an alternative time frame for commencing a civil action under 35 U.S.C. 154(b)(4)(A).

Any questions concerning this decision should be directed to the Office of Patent Legal Administration at 571-272-7702.

UNITED STATES PATENT AND TRADEMARK OFFICE

Commissioner for Patents
United States Patent and Trademark Office
P.O. Box 1450
Alexandria, VA 22313-1450
www.uspto.gov

MICHAEL G PETIT
123 W PADRE ST., SUITE F
P O BOX 91929
SANTA BARBARA CA 93190

COPY MAILED

AUG 2 1 2006

OFFICE OF PETITIONS

In re Application of :
Withey :
Application No. 11/412,010 : DECISION ON PETITION
Filed: April 25, 2006 : TO MAKE SPECIAL UNDER
Attorney Docket No. 06WIT1 : 37 CFR 1.102(c)(1)
:

This is a decision on the petition under 37 CFR 1.102(c)(1), filed June 5, 2006, to make the above-identified application special based on applicant's age as set forth in M.P.E.P. § 708.02, Section IV.

The petition is **DISMISSED**.

A grantable petition to make an application special under 37 CFR 1.102(c)(1) and MPEP § 708.02, Section IV: Applicant's Age, must be accompanied by evidence showing that at least one of the applicants is 65 years of age, or more, such as a birth certificate or a statement by applicant. No fee is required.

The instant petition does not include sufficient evidence, i.e. copy of birth certificate, statement by the applicant copy of drivers license.

Further correspondence with respect to this matter should be addressed as follows:

By Mail: Mail Stop PETITION
Commissioner for Patents
P. O. Box 1450
Alexandria, VA 22313-1450

By hand: U. S. Patent and Trademark Office
Customer Service Window, Mail Stop Petitions
Randolph Building
401 Dulany Street
Alexandria, VA 22314

By FAX: (571) 273-8300

Telephone inquiries concerning this decision should be directed to April Wise at 571-272-1642.

All other inquiries concerning either the examination or status of the application should be directed to the Technology Center.

The application is being forwarded to the Technology Center Art Unit 3763 action in its regular turn.

Amelia Au
Petitions Examiner
Office of Petitions

UNITED STATES PATENT AND TRADEMARK OFFICE

COMMISSIONER FOR PATENTS
UNITED STATES PATENT AND TRADEMARK OFFICE
P.O. BOX 1450
ALEXANDRIA, VA 22313-1450
www.uspto.gov

Howard IP Law Group
P.O. Box 226
Fort Washington, PA 19034

COPY MAILED

MAR 10 2008

OFFICE OF PETITIONS

In re Application of :
Anthony D. Kurtz et al. :
Application No. 11/412,024 : DECISION ON PETITION
Filed: April 26, 2006 : TO WITHDRAW
Attorney Docket No. Kulite-117 : FROM RECORD
:

This is a decision on the Requests to Withdraw as attorney or agent under 37 C.F.R. § 1.36(b) or 37 C.F.R. § 10.40 filed January 10, 2008 and February 29, 2008.

The request is **APPROVED**.

A grantable request to withdraw as attorney/agent of record must be signed by every attorney/agent seeking to withdraw or contain a clear indication that one attorney is signing on behalf of another/others. A request to withdraw will not be approved unless at least 30 (thirty) days would remain between the date of approval and the later of the expiration date of a time to file a response or the expiration date of the maximum time period which can be extended under 37 C.F.R. § 1.136(a).

The requests were signed by Edward J. Howard, on behalf of all attorneys/agents of record. All attorneys/agents have been withdrawn.

The request to change the correspondence of record is not acceptable as the requested correspondence address is not that of (1) the first named signing inventor; or (2) an intervening assignee of the entire interest under 37 C.F.R. 3.71. Accordingly, all correspondence will be mailed to the first signing inventor. A courtesy copy of this decision will be mailed to the address noted on the request to withdraw. If you would like to receive future correspondence regarding this application, then the proper power of attorney documents must be submitted.

Applicant is reminded that there is no attorney of record at this time.

There are no outstanding Office actions in this case.

Telephone inquires concerning this decision should be directed to Kimberly Inabinet at 571-272-4618.

Kimberly Inabinet
Petitions Examiner
Office of Petitions

cc: Anthony D. Kurtz
136 Saddle River Road
Saddle River, NJ 07458

cc: The Plevy Firm
10 Rutgers Place
Trenton, NJ 08618

UNITED STATES PATENT AND TRADEMARK OFFICE

UNITED STATES DEPARTMENT OF COMMERCE
United States Patent and Trademark Office
Address: COMMISSIONER FOR PATENTS
P.O. Box 1450
Alexandria, Virginia 22313-1450
www.uspto.gov

APPLICATION NUMBER	FILING OR 371(C) DATE	FIRST NAMED APPLICANT	ATTY. DOCKET NO./TITLE
11/412,024	04/26/2006	Anthony D. Kurtz	

CONFIRMATION NO. 6868

POWER OF ATTORNEY NOTICE

45722
Howard IP Law Group
P.O. Box 226
Fort Washington, PA 19034

OC00000028723598

Date Mailed: 03/10/2008

NOTICE REGARDING CHANGE OF POWER OF ATTORNEY

This is in response to the Power of Attorney filed 02/29/2008.

- The withdrawal as attorney in this application has been accepted. Future correspondence will be mailed to the new address of record. 37 CFR 1.33.

/kainabinet/

Office of Initial Patent Examination (571) 272-4000 or 1-800-PTO-9199

UNITED STATES PATENT AND TRADEMARK OFFICE

Commissioner for Patents
United States Patent and Trademark Office
P.O. Box 1450
Alexandria, VA 22313-1450
www.uspto.gov

COPY MAILED

OCT 2 4 2007

OFFICE OF PETITIONS

MICHELE K. YODER
14625 MACKLIN ROAD
NEW SPRINGFIELD, OH 44443

In re Application of :
Timothy Howard Yoder :
Application No. 11/412,027 : ON PETITION
Filed: April 26, 2006 :
Attorney Docket No. THY 06001 :

This is a decision on the petition under 37 CFR 1.137(b), filed June 15, 2007, to revive the above-identified application.

The petition is **GRANTED**.

The application became abandoned for failure to timely respond to a Notice to File Corrected Application Papers mailed May 24, 2006. The notice required, within two months, replacement drawings in compliance with 37 CFR 1.84 and 37 CFR 1.121. A Notice of Abandonment was mailed on January 29, 2007. In response, on June 15, 2007, the present petition was filed.

The petition satisfies the requirements of 37 CFR 1.137(b) in that petitioner has supplied (1) the reply in the form of replacement drawings; (2) the petition fee of $750; and (3) an adequate statement of unintentional delay.

The application is being referred to the Office of Patent Application Processing (OPAP) for review of the drawings provided June 15, 2007.

Telephone inquires related to this decision should be directed to the undersigned at (571) 272-3204. Telephone inquiries related to processing at OPAP should be directed to their hotline at (571) 272-4000.

Sherry D. Brinkley
Petitions Examiner
Office of Petitions

UNITED STATES PATENT AND TRADEMARK OFFICE

Commissioner for Patents
United States Patent and Trademark Office
P.O. Box 1450
Alexandria, VA 22313-1450
www.uspto.gov

CANTOR COLBURN LLP
55 GRIFFIN ROAD SOUTH
BLOOMFIELD CT 06002

COPY MAILED

MAR 26 2007

OFFICE OF PETITIONS

In re Application of :
Jeong, et al. :
Application No. 11/412,028 : DECISION ON PETITION
Filed: April 26, 2006 :
Attorney Docket No. PHO-0013 :

This is a decision on the petition to withdraw the holding of abandonment under 37 CFR 1.181, filed February 27, 2007.

The petition is **GRANTED**.

The above-identified application became abandoned for failure to timely file a reply in response to the Notice to File Corrected Application Papers mailed May 24, 2006. A Notice of Abandonment was mailed on January 29, 2007.

Petitioner argues that he timely filed a response. In support thereof, petitioner has included a copy of the response, bearing a Certificate of Mailing dated July 24, 2006.

In view thereof, **the holding of abandonment is withdrawn.**

The matter is being forwarded to the Office of Initial Patent Examination for consideration of the response bearing a Certificate of Mailing dated July 24, 2006, a copy of which has been supplied with the instant petition.

Telephone inquiries regarding this decision should be directed to the undersigned at (571)272-3207.

Cliff Congo
Petitions Attorney
Office of Petitions

UNITED STATES PATENT AND TRADEMARK OFFICE

Commissioner for Patents
United States Patent and Trademark Office
P.O. Box 1450
Alexandria, VA 22313-1450
www.uspto.gov

**LAW OFFICE OF ROBERT E. KASODY,
PROFESSIONAL CORPORATION
6601 CENTER DRIVE WEST, SUITE #500
LOS ANGELES, CA 90045**

COPY MAILED

APR 0 3 2009

OFFICE OF PETITIONS

In re Application of	:	
Leone et al.	:	DECISION ON PETITION
Application No. 11/412,039	:	TO WITHDRAW
Filed: April 26, 2006	:	FROM RECORD
Attorney Docket No. 5531	:	

This is a decision on the Request to Withdraw as attorney or agent of record under 37 C.F.R. § 1.36(b), filed December 16, 2008.

The request is **APPROVED**.

A grantable request to withdraw as attorney/agent of record must be signed by every attorney/agent seeking to withdraw or contain a clear indication that one attorney is signing on behalf of another/others.

The request was signed by Robert E. Kasody, on behalf of all attorneys of record who are associated with Customer No. 70515.

All attorneys/agents associated with the Customer Number 70515 have been withdrawn. Applicant is reminded that there is no attorney of record at this time.

The correspondence address of record has been changed and the new correspondence address is the address indicated below.

There are no outstanding Office actions that require a reply from the applicant.

Telephone inquires concerning this decision should be directed to Alicia Kelley at (571) 272-6059. All other inquires concerning either the examination or status of the application should be directed to the Technology Center.

/SDB/

Sherry D. Brinkley
Petitions Examiner
Office of Petitions

cc: ANORA INTERNATIONAL, LLC.
ATTENTION MR. THOMAS KNOX
2685 CIRCLEPORT DRIVE
ERLANGER, KY 41018

UNITED STATES PATENT AND TRADEMARK OFFICE

UNITED STATES DEPARTMENT OF COMMERCE
United States Patent and Trademark Office
Address: COMMISSIONER FOR PATENTS
P.O. Box 1450
Alexandria, Virginia 22313-1450
www.uspto.gov

APPLICATION NUMBER	FILING OR 371(C) DATE	FIRST NAMED APPLICANT	ATTY. DOCKET NO./TITLE
11/412,039	04/26/2006	Thomas H. Leone	

CONFIRMATION NO. 7004

POWER OF ATTORNEY NOTICE

70515
Law Office Of Robert E. Kasody,
Professional Corporation
6601 Center Drive West, Suite #500
Los Angeles, CA 90045

OC000000035320065

Date Mailed: 04/03/2009

NOTICE REGARDING CHANGE OF POWER OF ATTORNEY

This is in response to the Power of Attorney filed 12/16/2008.

- The withdrawal as attorney in this application has been accepted. Future correspondence will be mailed to the new address of record. 37 CFR 1.33.

/crqueen/

Office of Data Management, Application Assistance Unit (571) 272-4000, or (571) 272-4200, or 1-888-786-0101

UNITED STATES PATENT AND TRADEMARK OFFICE

Commissioner for Patents
United States Patent and Trademark Office
P.O. Box 1450
Alexandria, VA 22313-1450
www.uspto.gov

MAYER BROWN LLP
P.O. BOX 2828
CHICAGO IL 60690

COPY MAILED
OCT 01 2008

In re Application of
Christodoulos Stefanadis et al.
Application No. 11/412,040
Filed: April 25, 2006
Attorney's Docket No. **06045927**

ON PETITION

This is a decision on the petition filed May 30, 2008, under 37 CFR 1.137(b)[1], to revive the above-identified application.

The petition is **GRANTED**.

This application became abandoned for failure to file a timely response to the Notice to File Missing Parts "Notice" mailed May 19, 2006, which set a two (2) month shortened statutory period for reply. A response filed December 19, 2006 with a five month extension of time was incomplete and thus, a Notice of Incomplete Reply was mailed December 26, 2006. No further response or extensions of the time for reply under 37 CFR 1.136(a) were obtained prior to abandonment. Accordingly, a Notice of Abandonment was mailed May 19, 2008.

The response, as required by the Notice to File Missing Parts mailed May 19, 2006 and the Notice of Incomplete Reply mailed December 26, 2006 is acknowledged.

All other requirements having been met, this application is being forwarded to the Office of Patent Application Processing for further pre-examination processing.

Telephone inquiries concerning this matter may be directed to the undersigned Petitions Attorney at (571) 272-3212.

Patricia Faison-Ball
Senior Petitions Attorney
Office of Petitions

---

[1]Effective December 1, 1997, the provisions of 37 CFR 1.137(b) now provide that where the delay in reply was unintentional, a petition may be filed to revive an abandoned application or a lapsed patent pursuant to 37 CFR 1.137(b). A grantable petition filed under the provisions of 37 CFR 1.137(b) must be accompanied by:

(1) the required reply, unless previously filed. In a nonprovisional application abandoned for failure to prosecute, the required reply may be met by the filing of a continuing application. In an application or patent, abandoned or lapsed for failure to pay the issue fee or any portion thereof, the required reply must be the payment of the issue fee or any outstanding balance thereof.

(2) the petition fee as set forth in 37 CFR 1.17(m);

(3) a statement that the entire delay in filing the required reply from the due date for the reply until the filing of a grantable petition pursuant to 37 CFR 1.137(b) was unintentional. The Commissioner may required additional information where there is a question whether the delay was unintentional; and

(4) any terminal disclaimer (and fee as set forth in 37 CFR 1.20(d)) required pursuant to 37 CFR 1.137(c)).

UNITED STATES PATENT AND TRADEMARK OFFICE

Commissioner for Patents
United States Patent and Trademark Office
P.O. Box 1450
Alexandria, VA 22313-1450
www.uspto.gov

COPY MAILED

NOV 09 2006

OFFICE OF PETITIONS

Rohm & Monsanto, PLC
12 Rathbone Place
Grosse Pointe MI 48230

In re Application of :
Lakshmanan et al. : DECISION GRANTED
Application No. 11/,412,053 :
Filed: April 25, 2006 :
Attorney Docket No.: MV8cip2 :
Title: Living Being Presence :
Detection System :
:
:

This is a decision on the petition filed August 21, 2006 (August 15, 2006 certificate of mailing), requesting in effect, the "Notice of Omitted Item(s)contained in the Notice to File Missing Parts in a Nonprovisional Application" ("Notice") be withdrawn, and the above-identified application be accorded a filing date of April 25, 2006 including figure 10.

The application was filed on August 21, 2006. However, on June 15, 2006, the Office of Initial Patent Examination (OIPE) mailed a Notice stating that the application had been accorded a filing date of April 25, 2006 but figure 10 as described in the specification appeared to have been omitted.

In response, the present petition was filed wherein Petitioner contends figure 10 was filed on April 25, 2006. In support, the petition is accompanied by a copy of applicant's return postcard receipt which lists "Eleven (11) sheets of drawings". The petition is further accompanied by a copy of figure 10.

Applicants' postcard receipt is prima facie evidence that at least 11 sheets of drawings including figure 10 as described in the specification were received on April 25, 2006, but figure 10 is not present in the file. Therefore, it is concluded that figure 10 was received on April 25, 2006, as shown in counsel's file, and later misplaced in the office.

The petition is Granted to the extent indicated above. The $400.00 petition fee will be refunded.

Figure 10 supplied on August 21, 2006, will be used for processing and examination purposes.

The application will be returned to the Office of Initial Patent Examination for further processing with a filing date of April 25, 2006, using the drawings submitted on April 25, 2006 and substitute figure 10 supplied with the petition on August 21, 2006.

Telephone inquiries related to this decision may be directed to the undersigned at (571) 272-3215.

Charlema R. Grant

Charlema R. Grant
Petition Attorney
Office of Petitions

UNITED STATES PATENT AND TRADEMARK OFFICE

UNITED STATES DEPARTMENT OF COMMERCE
United States Patent and Trademark Office
Address: COMMISSIONER FOR PATENTS
P.O. Box 1450
Alexandria, Virginia 22313-1450
www.uspto.gov

Terry W. Kramer, Esq.
Kramer & Amado, P.C.
1725 Duke Street, Suite 240
Alexandria, VA 22314

Mail Date: 06/18/2010

Applicant	: Tim Kuhl	: DECISION ON REQUEST FOR
Patent Number	: 7636357	: RECALCULATION of PATENT
Issue Date	: 12/22/2009	: TERM ADJUSTMENT IN VIEW
Application No	: 11/412,084	: OF WYETH AND NOTICE OF INTENT TO
Filed	: 04/27/2006	: ISSUE CERTIFICATE OF CORRECTION
		:

The Request for Recalculation is **GRANTED** to the extent indicated.

The patent term adjustment has been determined to be **754** days. The USPTO will *sua sponte* issue a certificate of correction reflecting the amount of PTA days determined by the recalculation.

Prior to the issuance of the certificate of correction, the USPTO will afford patentee an opportunity to be heard and request reconsideration. Accordingly, patentee has **one month or thirty (30) days**, whichever is longer, to file a request for reconsideration of this patent term adjustment calculation. See 35 U.S.C. 154(b)(3)(B)(ii) and 37 CFR 1.322(a)(4). No extensions of time will be granted under 37 CFR 1.136.

Patentee should use document code PET.OP if electronically filing a request for reconsideration of this patent term adjustment calculation. The patentee must also include the information required by 37 CFR 1.705(b)(2) and the fee required by 37 CFR 1.18(e). If patentee does not file a timely request for reconsideration of this patent term adjustment calculation including the information required by 37 CFR 1.705(b)(2) and the fee required by 37 CFR 1.18(e), the USPTO will issue a certificate of correction reflecting the PTA determination noted above.

Patentee should be aware that in order to preserve the right to review in the United States District Court for the District of Columbia of the USPTO patent term adjustment determination, patentee must ensure that he or she also take the steps required under 35 U.S.C. 154(b)(4)(A) in a timely manner. Nothing in the request for recalculation should be construed as providing an alternative time frame for commencing a civil action under 35 U.S.C. 154(b)(4)(A).

Any questions concerning this decision should be directed to the Office of Patent Legal Administration at 571-272-7702.

UNITED STATES PATENT AND TRADEMARK OFFICE

Commissioner for Patents
United States Patent and Trademark Office
P.O. Box 1450
Alexandria, VA 22313-1450
www.uspto.gov

STERNE, KESSLER, GOLDSTEIN & FOX, P.L.L.C.
1100 NEW YORK AVENUE, N.W.
WASHINGTON DC 20005-3934

COPY MAILED

MAY 10 2007

OFFICE OF PETITIONS

In re Application of :
Becker, et al. :
Application No. 11/412,093 : DECISION ON PETITION
Filed: April 27, 2006 : UNDER 37 CFR 1.137(b)
Attorney Docket No. 2348.0360001 :

This is a decision on the petition, filed December 18, 2006, which is being treated as a petition under 37 CFR 1.137(b) to revive the instant nonprovisional application for failure to timely notify the U.S. Patent and Trademark (USPTO) of the filing of an application in a foreign country, or under a multinational treaty that requires publication of applications eighteen months after filing. *See* 37 CFR 1.137(f).

The petition is **GRANTED**.

Petitioner states that the instant nonprovisional application is the subject of an application filed in an eighteen-month publication country on June 16, 2006. However, the USPTO was unintentionally not notified of this filing within 45 days subsequent to the filing of the subject application in an eighteen-month publication country.

In view of the above, this application became abandoned pursuant to 35 U.S.C. § 122(b)(2)(B)(iii) and 37 CFR 1.213(c) for failure to timely notify the Office of the filing of an application in a foreign country or under a multilateral international agreement that requires publication of applications 18 months after filing.

A petition to revive an application abandoned pursuant to 35 U.S.C. 122(b)(2)(B)(iii) for failure to notify the USPTO of a foreign filing must be accompanied by:

(1) the required reply which is met by the notification of such filing in a foreign country or under a multinational treaty;
(2) the petition fee as set forth in 37 CFR 1.17(m); and
(3) a statement that the entire delay in filing the required reply from the due date of the reply until the filing of a grantable petition was unintentional.

The instant petition has been found to be in compliance with 37 CFR 1.137(b). Accordingly, the failure to timely notify the USPTO of a foreign or international filing within 45 days after the date of filing of such foreign or international application as provided by 35 U.S.C. § 122(b)(2)(B)(iii) and 37 CFR 1.213(c) is accepted as having been unintentionally delayed.

The previous Request and Certification under 35 U.S.C. § 122(b)(2)(B)(i) has been rescinded. A Communication Regarding Rescission of Nonpublication Request and/or Notice of Foreign Filing which sets forth the projected publication date of August 16, 2007 accompanies this decision on petition.

Telephone inquiries concerning this decision should be directed to the undersigned at (571) 272- 3230.

This application is being forwarded to Technology Center Art Unit 3622 for examination in due course.

Shirene Willis Brantley
Senior Petitions Attorney
Office of Petitions

ATTACHMENT: Communication Regarding Rescission of Nonpublication Request and/or Notice of Foreign Filing

UNITED STATES PATENT AND TRADEMARK OFFICE

UNITED STATES DEPARTMENT OF COMMERCE
United States Patent and Trademark Office
Address: COMMISSIONER FOR PATENTS
P.O. Box 1450
Alexandria, Virginia 22313-1450
www.uspto.gov

APPLICATION NUMBER	FILING/RECEIPT DATE	FIRST NAMED APPLICANT	ATTY. DOCKET NO.
11/412,093	04/27/2006	Mark Douglas Becker	2348.0360001

CONFIRMATION NO. 7415

53636
STERNE, KESSLER, GOLDSTEIN & FOX, P.L.L.C.
1100 NEW YORK AVENUE, N.W.
WASHINGTON, DC 20005-3934

Date Mailed: 05/09/2007

Communication Regarding Rescission Of Nonpublication Request and/or Notice of Foreign Filing

Applicant's rescission of the previously-filed nonpublication request and/or notice of foreign filing is acknowledged. The paper has been reflected in the Patent and Trademark Office's (USPTO's) computer records so that the earliest possible projected publication date can be assigned.

The projected publication date is 08/16/2007.

If applicant rescinded the nonpublication request before or on the date of "foreign filing,"[1] then no notice of foreign filing is required.

If applicant foreign filed the application after filing the above application and before filing the rescission, and the rescission did not also include a notice of foreign filing, then a notice of foreign filing (not merely a rescission) is required to be filed within 45 days of the date of foreign filing. See 35 U.S.C. § 122(b)(2)(B)(iii), and Clarification of the United States Patent and Trademark Office's Interpretation of the Provisions of 35 U.S.C. § 122(b)(2)(B)(ii)-(iv), 1272 Off. Gaz. Pat. Office 22 (July 1, 2003).

If a notice of foreign filing is required and is not filed within 45 days of the date of foreign filing, then the application becomes abandoned pursuant to 35 U.S.C. § 122(b)(2)(B)(iii). In this situation, applicant should either file a petition to revive or notify the Office that the application is abandoned. See 37 CFR 1.137(f). Any such petition to revive will be forwarded to the Office of Petitions for a decision. Note that the filing of the petition will not operate to stay any period of reply that may be running against the application.

Questions regarding petitions to revive should be directed to the Office of Petitions at (571) 272-3282. Questions regarding publications of patent applications should be directed to the patent application publication hotline at (703) 605-4283 or by e-mail pgpub@uspto.gov.

[1] Note, for purpose of this notice, that "foreign filing" means "filing an application directed to the same invention in another country, or under a multilateral international agreement, that requires publication of applications 18 months after filing".

UNITED STATES PATENT AND TRADEMARK OFFICE

Commissioner for Patents
United States Patent and Trademark Office
P.O. Box 1450
Alexandria, VA 22313-1450
www.uspto.gov

GOWLING LAFLEUR HENDERSON LLP
SUITE 1400, 700 2ND ST. SW
CALGARY AB T2P 4V5 CA CANADA

COPY MAILED

OCT 13 2006

OFFICE OF PETITIONS

In re Application of :
John Schwarz :
Application No. 11/412,124 : DECISION ON PETITION
Filed: April 27, 2006 : TO MAKE SPECIAL UNDER
Attorney Docket No. A8103331US : 37 CFR 1.102(c)(2)
:

This is a decision on the petition under 37 CFR 1.102(c) (2)(ii), filed April 27, 2006, to make the above-identified application special based on the invention materially contributing to the development or conservation of energy resources as set forth in M.P.E.P. § 708.02, Section VI.

The petition is **DISMISSED**.

A grantable petition to make an application special under 37 CFR 1.102(c)(ii) and MPEP § 708.02, Section VI: Energy, must state how the invention materially contributes to (A) the discovery or development of energy resources, or (B) the more efficient utilization and conservation of energy resources. If the disclosure is not clear on its face that the claimed invention materially contributes category (A) or (B), the petition must be accompanied by a statement by the applicant, assignee, or an attorney/agent registered to practice before the Office explaining how the materiality standard is met. Examples of inventions in category (A) would be developments in fossil fuels (natural gas, coal, and petroleum), hydrogen fuel technologies, nuclear energy, solar energy, etc. Category (B) would include inventions relating to the reduction of energy consumption in combustion systems, industrial equipment, household appliances, etc. No fee is required.

The claimed invention is a cover and method for de-icing and thawing frozen objects and surfaces. Petitioner states that the invention is "of particular use in the context of hydrocarbon drilling and production facilities." However, the claims do not recite any limitations directed toward hydrocarbon drilling. The petition also states that the invention is an improvement over current unsafe, ineffective and cost-prohibitive methods by preventing direct user contact with steam, heating quickly and uniformly and eliminating the need for extra accessories and that these distinctions materially contribute to the discovery or development of energy resources. The petition and disclosure lacks any specifics about how the invention materially contributes to the discovery or development of energy resources. Moreover, the Background of the Invention section of the above-identified application discusses other techniques for de-icing and thawing equipment. It is unclear how applicant's invention would actually contribute materially to the discovery or development of oil or gas any more than the existing or above-described technologies in the field. The petition must explain in greater detail how the materiality standard for the invention has been met. For example, a comparison between known techniques and the petitioner's invention should be

presented to demonstrate how the current invention materially contributes to the discovery or development of energy resources.

Further correspondence with respect to this matter should be addressed as follows:

By Mail: Mail Stop PETITIONS
Commissioner for Patents
P. O. Box 1450
Alexandria, VA 22313-1450

By hand: U. S. Patent and Trademark Office
Customer Service Window, Mail Stop Petitions
Randolph Building
401 Dulany Street
Alexandria, VA 22314

By FAX: (571) 273-8300

Telephone inquiries concerning this decision should be directed to Irvin Dingle at 571-272-3210.

All other inquiries concerning either the examination or status of the application should be directed to the Technology Center.

The application is being forwarded to the Technology Center Art Unit 3752 for action in its regular turn.

Amelia Au
Petitions Examiner
Office of Petitions

UNITED STATES PATENT AND TRADEMARK OFFICE

UNITED STATES DEPARTMENT OF COMMERCE
United States Patent and Trademark Office
Address: COMMISSIONER FOR PATENTS
P.O. Box 1450
Alexandria, Virginia 22313-1450
www.uspto.gov

Terry W. Kramer, Esq.
Kramer & Amado, P.C.
1725 Duke Street, Suite 240
Alexandria, VA 22314

Mail Date: 07/23/2010

Applicant	: David James Wilson	: DECISION ON REQUEST FOR
Patent Number	: 7649906	: RECALCULATION of PATENT
Issue Date	: 01/19/2010	: TERM ADJUSTMENT IN VIEW
Application No	: 11/412,143	: OF WYETH AND NOTICE OF INTENT TO
Filed	: 04/27/2006	: ISSUE CERTIFICATE OF CORRECTION
		:

The Request for Recalculation is **GRANTED** to the extent indicated.

The patent term adjustment has been determined to be **636** days. The USPTO will *sua sponte* issue a certificate of correction reflecting the amount of PTA days determined by the recalculation.

Prior to the issuance of the certificate of correction, the USPTO will afford patentee an opportunity to be heard and request reconsideration. Accordingly, patentee has **one month or thirty (30) days**, whichever is longer, to file a request for reconsideration of this patent term adjustment calculation. See 35 U.S.C. 154(b)(3)(B)(ii) and 37 CFR 1.322(a)(4). No extensions of time will be granted under 37 CFR 1.136.

Patentee should use document code PET.OP if electronically filing a request for reconsideration of this patent term adjustment calculation. The patentee must also include the information required by 37 CFR 1.705(b)(2) and the fee required by 37 CFR 1.18(e). If patentee does not file a timely request for reconsideration of this patent term adjustment calculation including the information required by 37 CFR 1.705(b)(2) and the fee required by 37 CFR 1.18(e), the USPTO will issue a certificate of correction reflecting the PTA determination noted above.

Patentee should be aware that in order to preserve the right to review in the United States District Court for the District of Columbia of the USPTO patent term adjustment determination, patentee must ensure that he or she also take the steps required under 35 U.S.C. 154(b)(4)(A) in a timely manner. Nothing in the request for recalculation should be construed as providing an alternative time frame for commencing a civil action under 35 U.S.C. 154(b)(4)(A).

Any questions concerning this decision should be directed to the Office of Patent Legal Administration at 571-272-7702.

UNITED STATES PATENT AND TRADEMARK OFFICE

UNITED STATES DEPARTMENT OF COMMERCE
United States Patent and Trademark Office
Address: COMMISSIONER FOR PATENTS
P.O. Box 1450
Alexandria, Virginia 22313-1450
www.uspto.gov

LEADING-EDGE LAW GROUP, PLC
P. O. BOX 1996
RICHMOND, VA 23218

Mail Date: 04/21/2010

Applicant	: John D. Adair JR.	: DECISION ON REQUEST FOR
Patent Number	: 7584580	: RECALCULATION of PATENT
Issue Date	: 09/08/2009	: TERM ADJUSTMENT IN VIEW
Appliction No	: 11/412,159	: OF WYETH AND NOTICE OF INTENT TO
Filed	: 04/26/2006	: ISSUE CERTIFICATE OF CORRECTION
		:

The Request for Recalculation is **GRANTED** to the extent indicated.

The patent term adjustment has been determined to be **385** days. The USPTO will *sua sponte* issue a certificate of correction reflecting the amount of PTA days determined by the recalculation.

Prior to the issuance of the certificate of correction, the USPTO will afford patentee an opportunity to be heard and request reconsideration. Accordingly, patentee has **one month or thirty (30) days**, whichever is longer, to file a request for reconsideration of this patent term adjustment calculation. See 35 U.S.C. 154(b)(3)(B)(ii) and 37 CFR 1.322(a)(4). No extensions of time will be granted under 37 CFR 1.136.

Patentee should use document code PET.OP if electronically filing a request for reconsideration of this patent term adjustment calculation. The patentee must also include the information required by 37 CFR 1.705(b)(2) and the fee required by 37 CFR 1.18(e). If patentee does not file a timely request for reconsideration of this patent term adjustment calculation including the information required by 37 CFR 1.705(b)(2) and the fee required by 37 CFR 1.18(e), the USPTO will issue a certificate of correction reflecting the PTA determination noted above.

Patentee should be aware that in order to preserve the right to review in the United States District Court for the District of Columbia of the USPTO patent term adjustment determination, patentee must ensure that he or she also take the steps required under 35 U.S.C. 154(b)(4)(A) in a timely manner. Nothing in the request for recalculation should be construed as providing an alternative time frame for commencing a civil action under 35 U.S.C. 154(b)(4)(A).

Any questions concerning this decision should be directed to the Office of Patent Legal Administration at 571-272-7702.

UNITED STATES PATENT AND TRADEMARK OFFICE

UNITED STATES DEPARTMENT OF COMMERCE
United States Patent and Trademark Office
Address: COMMISSIONER FOR PATENTS
P.O. Box 1450
Alexandria, Virginia 22313-1450
www.uspto.gov

LEADING-EDGE LAW GROUP, PLC
P. O. BOX 1996
RICHMOND, VA 23218

Mail Date: 05/18/2010

Applicant : John D. Adair JR.
Patent Number : 7584580
Issue Date : 09/08/2009
Application No: 11/412,159
Filed : 04/26/2006

: NOTICE CONCERNING IMPROPER
: CALCULATION OF PATENT TERM
: ADJUSTMENT BASED UPON USPTO
: IMPROPERLY MEASURING REDUCTION
: PERIOD UNDER 37 CFR 1.704(c)(10).

The United States Patent and Trademark Office (USPTO) discovered that in processing the recent recalculation decisions mailed in response to patentee's filed Request for Recalculation of Patent Term Adjustment in view of Wyeth, the USPTO improperly measured the reduction period for reductions under 37 CFR 1.704(c)(10). Pursuant to 37 CFR 1.704(c)(10), patentee's reduction begins on the date of filing the amendment under 37 CFR 1.312 ("1.312 amendment") or other related paper and ends on the date that the Office mails a response to the filing of the 1.312 amendment or other paper. It has been discovered that during the recalculation, the calculation failed to the limit the reduction to the mail date of the response to the 1.312 amendment or other paper. Accordingly, patentee's reductions were greater than warranted.

This notice **VACATES** the previous GRANTED request for recalculation and provides patentee with a revised GRANTED recalculation.

The patent term adjustment has been determined to be **435** days. The USPTO will *sua sponte* issue a certificate of correction reflecting the amount of patent term adjustment (PTA) days determined by the recalculation.

Prior to the issuance of the certificate of correction, the USPTO will afford patentee an opportunity to be heard and request reconsideration. Accordingly, patentee has **one month or thirty (30) days** from the mail date of this notice, whichever is longer, to file a request for reconsideration of this PTA calculation. See 35 U.S.C. § 154(b)(3)(B)(ii) and 37 CFR 1.322(a)(4).

Patentee should use document code PET.OP if electronically filing a request for reconsideration of this PTA calculation. The patentee must also include the information required by 37 CFR 1.705(b)(2), and the fee required by 37 CFR 1.18(e). If patentee does not file a timely request for reconsideration of this PTA calculation, including the information required by 37 CFR 1.705(b)(2) and the fee required by 37 CFR 1.18(e), the USPTO will issue a certificate of correction reflecting the PTA determination noted above.

Patentee should be aware that in order to preserve the right of review of the USPTO's PTA determination in the United States District Court for the District of Columbia, patentee must ensure that the steps required under 35 U.S.C. § 154 (b)(4) are taken in a timely manner. Nothing in the request for recalculation should be construed as providing an alternative time frame for commencing a civil action under 35 U.S.C. § 154(b)(4).

UNITED STATES PATENT AND TRADEMARK OFFICE

Commissioner for Patents
United States Patent and Trademark Office
P.O. Box 1450
Alexandria, VA 22313-1450
www.uspto.gov

BROUSE MCDOWELL, LPA
388 SOUTH MAIN STREET, SUITE 500
AKRON, OH 44311

COPY MAILED

AUG 12 2008

OFFICE OF PETITIONS

In re Application of :
GARMIER, William W. :
Application No. 11/412,164 : DECISION ON PETITION
Filed: June 16, 2006 : TO WITHDRAW
Attorney Docket No. 30975.41628 : FROM RECORD
:

This is a decision on the Request to Withdraw as attorney or agent of record under 37 C.F.R. § 1.36(b), filed March 26, 2008.

The request is DISMISSED as moot.

A review of the file record indicates that the power of attorney to BROUSE MCDOWELL, LPA has been revoked by the assignee of the patent application on July 21, 2008. Accordingly, the request to withdraw under 37 C.F.R. § 1.36(b) is moot.

All future communications from the Office will continue to be directed to the below-listed address until otherwise notified by applicant.

Telephone inquires concerning this decision should be directed to the undersigned at 571-272- 7253.

Monica A. Graves
Petitions Examiner
Office of Petitions

cc: EMERSON THOMSON & BENNETT
777 WEST MARKET STREET
AKRON, OHIO 44303

UNITED STATES PATENT AND TRADEMARK OFFICE

Commissioner for Patents
United States Patent and Trademark Office
P.O. Box 1450
Alexandria, VA 22313-1450
www.uspto.gov

DRINKER BIDDLE & REATH
ATTN: INTELLECTUAL PROPERTY GROUP
ONE LOGAN SQUARE
18TH AND CHERRY STREETS
PHILADELPHIA PA 19103-6996

COPY MAILED

FEB 0 1 2007

OFFICE OF PETITIONS

In re Application of :
BAKER, Jack T. :
Application No. 11/412,177 : DECISION ON PETITION
Filed: April 26, 2006 : TO MAKE SPECIAL UNDER
Attorney Docket No. 9687-6 (185652) : 37 CFR 1.102(c)(1)
:

This is a decision on the petition under 37 CFR 1.102(c)(1), filed January 4, 2007, to make the above-identified application special based on applicant's age as set forth in M.P.E.P. § 708.02, Section IV.

The petition is **GRANTED**.

A grantable petition to make an application special under 37 CFR 1.102(c)(1) and MPEP § 708.02, Section IV: Applicant's Age, must be accompanied by evidence showing that at least one of the applicants is 65 years of age, or more, such as a birth certificate or a statement by applicant. No fee is required.

The instant petition includes the statement/declaration of inventor Jack T. Baker, attesting to his age. Accordingly, the above-identified application has been accorded "special" status.

Telephone inquiries concerning this decision should be directed to the undersigned at 571-272-7253.

All other inquiries concerning either the examination or status of the application should be directed to the Technology Center.

The application is being forwarded to the Technology Center Art Unit 3727 for action on the merits commensurate with this decision.

Monica A. Graves
Petitions Examiner
Office of Petitions

UNITED STATES PATENT AND TRADEMARK OFFICE

Commissioner for Patents
United States Patent and Trademark Office
P.O. Box 1450
Alexandria, VA 22313-1450
www.uspto.gov

Paper No. 9

MAILED

MAY 11 2010

OFFICE OF PETITIONS

STRAUB & POKOTYLO
788 SHREWSBURY AVENUE
TINTON FALLS NJ 07724

In re Application of	:	
Mitsumasa Okubo et al	:	
Application No. 11/412,190	:	DECISION DISMISSING
Filed: April 26, 2006	:	PETITION UNDER
Attorney Docket No. OOCL- (6SI-06S0176-1)	:	37 CFR 1.313(c)(2)
	:	

This is a decision on the petition under 37 CFR 1.313(c)(2), filed May 10, 2010, to withdraw the above-identified application from issue after payment of the issue fee.

The petition is **DISMISSED AS MOOT.**

Unfortunately, the petition was not referred to the appropriate deciding official for decision until the date of issuance of this application into a patent. However, petitioner's attention is directed to 37 CFR 1.313(d), which states:

> A petition under this section will not be effective to withdraw the application from issue unless it is actually received and granted by the appropriate officials **before the date of issue.** (Emphasis added)

In this case, the petition was not received in the Office of Petitions for consideration until May 11, 2010, the date upon which the above-identified application issued as U.S. Patent No. 7,714,890. Since the case has now issued, the petition to withdraw from issue cannot be granted.

Applicants were cautioned to hand carry or fax petitions to withdraw from issue directly to the Office of Petitions. *See* MPEP § 1308.

The request for continued examination (RCE) filed concurrently with the petition is improper in view of the issuance of this application into a patent and will not be processed. Accordingly, the $810.00 filing fee and the $130.00 petition fee submitted are unnecessary and will be refunded in due course.

The Information Disclosure Statement has been made of record in the file of the above-identified application without further consideration. *See* 37 CFR 1.97(i).

Telephone inquiries concerning this matter may be directed to the undersigned at (571) 272-3208.

/KOC/
Karen Creasy
Petitions Examiner
Office of Petitions

UNITED STATES PATENT AND TRADEMARK OFFICE

Commissioner for Patents
United States Patent and Trademark Office
P.O. Box 1450
Alexandria, VA 22313-1450
www.uspto.gov

HAROLD I MASTELLER JR
PO BOX 302
3325 GREENWOOD DRIVE
SPRINGTOWN PA 18081

COPY MAILED

JUL 13 2007

OFFICE OF PETITIONS

In re Application of :
Donald Barrett :
Application No. 11/412,234 : ON PETITION
Filed: April 25, 2006 :
Attorney Docket No. DRB-3-US :

This is a decision on the petition to revive under 37 CFR 1.137(a), filed June 15, 2007.

The renewed petition under 37 CFR 1.137(a) is **GRANTED**.

The above-identified application became abandoned for failure to timely reply to the Notice to File Missing Parts of Nonprovisional Application, mailed May 19, 2006. This Notice set an extendable period for reply of two (2) months to submit the missing filing fees and replacement drawings. Applicant submitted the fees on July 7, 2006, but failed to submit replacement drawings. Accordingly, the Office mailed a Notice of Incomplete Reply on August 2, 2006, stating that the period for reply would remain as set forth in the Notice to File Missing Parts. No further reply having been received, the application became abandoned on July 20, 2006. The mailing of this decision precedes the mailing of a Notice of Abandonment.

Petition Under 37 CFR 1.137(a):

A grantable petition under 37 CFR 1.137(a) must be accompanied by: (1) the required reply, unless previously filed; (2) the petition fee as set forth in 37 CFR 1.17(l); (3) a showing to the satisfaction of the Commissioner that the entire delay in filing the required reply from the due date for the reply until the filing of a grantable petition pursuant to 37 CFR 1.137(a) was unavoidable; and (4) any terminal disclaimer (and fee as set forth in 37 CFR 1.20(d)) required pursuant to 37 CFR 1.137(d). Decisions on reviving abandoned applications on the basis of "unavoidable" delay have adopted the reasonably prudent person standard in determining if the delay was unavoidable:

> The word 'unavoidable' . . . is applicable to ordinary human affairs, and requires no more or greater care or diligence than is generally used and observed by prudent and careful men in relation to their most important business. It permits them in the exercise of this care to rely upon the ordinary and trustworthy agencies of mail and telegraph, worthy and reliable employees, and such other means and instrumentalities as are usually employed in such important business. If unexpectedly, or through the unforeseen fault or imperfection of these agencies and instrumentalities, there occurs a failure, it may properly be said to be unavoidable, all other conditions of promptness in its rectification being present.[1]

Moreover, a petition cannot be granted where a petitioner has failed to meet his or her burden of establishing that the delay was "unavoidable."[2]

On petition, petitioner has explained that the inventor, Donald Barrett, enlisted the service of an invention submission / promotion company, US Corporations, Inc. (USCI). As set forth by petitioner, the USCI employee who prepared and filed the instant application, Aaron Berk, was not registered to practice before the Office as an attorney or agent. At no time did USCI inform Barrett of the requirements set forth in the Notice to File

---

[1] In re Mattullath, 38 App. D.C. 497, 514-15 (1912)(quoting Ex parte Pratt, 1887 Dec. Comm'r Pat. 31, 32-33 (1887)); see also Winkler v. Ladd, 221 F. Supp. 550, 552, 138 USPQ 666, 167-68 (D.D.C. 1963), aff'd, 143 USPQ 172 (D.C. Cir. 1963); Ex parte Henrich, 1913 Dec. Comm'r Pat. 139, 141 (1913).

[2] Haines v. Quigg, 673 F. Supp. 314, 316-17, 5 USPQ2d 1130, 1131-32 (N.D. Ind. 1987).

Missing Parts, or the Notice of Incomplete Reply. Numerous calls from Barrett to USCI and Berk to ascertain the status of the application were not returned.

In view of the above, it is concluded that petitioner has met his burden of establishing that the delay was unavoidable.

Receipt of the replacement drawings, submitted with the instant petition, is acknowledged.

The matter is being forwarded to the Office of Initial Patent Examination for pre-examination processing.

Telephone inquiries concerning this decision should be directed to the undersigned at (571)272-3207.

Cliff Congo
Petitions Attorney
Office of Petitions

In the United States Patent and Trademark Office

Serial Number: 11/412243
Appn. Filed: 4-27-06
Applicant(s): James A. Papp Douglas Rice, Guy Wojtowicz
Appn. Title: Decontamination of Biological Agents
Examiner/GAU: 1742

Mailed: April 24 2006
At: Steamboat Springs CO

Petition to Make Special

Commissioner for Patents
Washington, District of Columbia 20231

Sir:

Applicant hereby respectfully petitions that the above application be made special under MPEP Sec. 708.02 for the following reason; attached is a declaration in support thereof:

I. ☐ Manufacturer Available;*
II. ☐ Infringement Exists;*
III. ☐ Applicant's Health Is Poor;
IV. ☐ Applicant's Age Is 65 or Greater;
V. ☐ Environmental Quality Will Be Enhanced;
VI. ☐ Energy Savings Will Result;
VII. ☐ Recombinant DNA Is Involved;*
VIII. ☐ Special Procedure: Search Was Made;*
IX. ☐ Superconductivity Is Advanced;
X. ☐ Relates to HIV/AIDS or Cancer.*
XI. ☑ Counters Terrorism*

*☐ Also attached, since reason I, II, VII, VIII, X or XI has been checked, is the $ None Petition Fee pursuant to Rules 102 and 17(i). See attached study Colorado State University

Very respectfully,

Applicant(s): James A. Papp Douglas Rice
Guy Wojtowicz

Attachment(s): Fee if indicated and supporting Declaration

c/o:

Telephone: 970 879 6163 work 970 879 5642

Certificate of Mailing

I certify that this correspondence will be deposited with the United States Postal Service as first class mail with proper postage affixed in an envelope addressed to: "Commissioner for Patents, Washington, DC 20231" on the date below.

Date: 2006 April 24 James A. Papp

Form 10-7

MAY 25 2006
PETITION GRANTED

William Krynski,
Special Program Examiner
Technology Center 1700

UNITED STATES PATENT AND TRADEMARK OFFICE

Commissioner for Patents
United States Patent and Trademark Office
P.O. Box 1450
Alexandria, VA 22313-1450
www.uspto.gov

GIFFORD, KRASS, SPRINKLE,
ANDERSON & CITKOWSKI, P.C.
P.O. BOX 7021
TROY, MI 48007-7021

MAILED

APR 13 2009

OFFICE OF PETITIONS

In re Application of :
Charles J. Cohen et al :
Application No. 11/412,252 : DECISION DISMISSING
Filed: April 27, 2006 : PETITION
Attorney Docket No. CYB-05903/03 :

This is a decision on the petition under 37 CFR 1.10(d), filed April 4, 2008, requesting that the above-identified application be accorded a filing date of April 25, 2006, rather than the presently accorded date of April 27, 2006.

The petition is **DISMISSED**.

Any request for reconsideration of this decision should be filed within **TWO MONTHS** of the date of this decision in order to be considered timely (see 37 CFR 1.181(f)). No extensions of time pursuant to the provisions of 37 CFR 1.136 are permitted. If reconsideration is not requested within the time period specified above, this application will be referred to the Office of Patent Application Processing with the presently accorded filing date of April 27, 2006.

Any person filing correspondence under this section that was received by the Office and delivered by the "Express Mail Post Office to Addressee" service of the USPS, who can show that the "date-in" on the "Express Mail" mailing label or other official notation entered by the USPS was incorrectly entered or omitted by the USPS, may petition the Director to accord the correspondence a filing date as of the date the correspondence is shown to have been deposited with the USPS.

The showing under 37 CFR 1.10(d) must be corroborated by (1) evidence from the USPS, or (2) evidence that came into being after deposit and within one business day of the deposit of the correspondence as "Express Mail." Evidence from the USPS may be the "Express Mail" Corporate Account Mailing Statement. Due to the questionable reliability of evidence from a party other than the USPS that did not come into being contemporaneously with the deposit of the correspondence with the USPS, 37 CFR 1.10(d) specifically requires that any petition under 37 CFR 1.10(d) be corroborated either by evidence from the USPS, or by evidence that came into being after deposit and within one business day after the deposit of the correspondence as "Express Mail." Evidence that came into being within one day after the deposit of the correspondence as "Express Mail" may be in the form of a log book which contains information such as the "Express Mail" number; the application number, attorney docket number or other such file identification number; the place, date and time of deposit; the time of the last scheduled pick up for that date and place of deposit; the depositor's initials or signature; and the date and time of entry in the log. Conversely, evidence created prior to the deposit of the correspondence as "Express Mail" with

the USPS (e.g., an application transmittal cover letter, or a client letter prepared prior to the deposit of the correspondence); or created more than one business day after the deposit of the correspondence as "Express Mail" (e.g., an affidavit or declaration prepared more than one business day after the correspondence was deposited with the USPS as "Express Mail") cannot be accepted under the terms of the rule.

Petitioner requests the earlier filing date on the basis that the application was purportedly deposited in Express Mail service on April 25, 2006, pursuant to the requirements of 37 CFR 1.10. The petition is accompanied by: copy of the Pickup Service Statement; copy of the Express Mail Label and copy of the Track / Confirm log showing the package in Detroit on April 26, 2006.

A grantable petition under 37 CFR 1.10(d) must include:

> (1) The filing of a petition promptly after the person becomes aware that the Office has accorded, or will accord, a filing date based upon an incorrect entry by the USPS;
>
> (2) The placement of the "Express Mail" number on the mailing label of the paper(s) or fee(s) that constitutes the correspondence prior to the original mailing by "Express Mail"; and
>
> (3) A showing which establishes, to the satisfaction of the Director, that the requested filing date was the date the correspondence was deposited in the "Express Mail Post Office to Addressee" service prior to the last scheduled pickup for that day. Any showing pursuant to this paragraph must be corroborated by evidence from the USPS or that came into being after deposit and within one business day of the deposit of the correspondence in the "Express Mail Post Office to Addressee" service of the USPS.

The petition lacks item (3) as the above provided evidence does not provide this showing.

Section 1.10(d) permits the Office to correct a USPS "date-in" error when the correspondence is deposited in an Express Mail drop box prior to the last scheduled pickup of the day; that is, the time clearly marked on the Express Mail drop box, including when the box will be cleared for the last time on the date of deposit. The reason the Office considers correspondence to have been filed as of the date of deposit as "Express Mail" is that this date has been verified by a disinterested USPS employee, through the insertion of a "date in," or other official USPS notation, on the "Express Mail" mailing label. Note that the correspondence must be entrusted either to a postal service employee or an Express Mail drop box for the correspondence to have been deposited as Express Mail Post Office to Addressee service of the USPS within the meaning of 37 CFR 1.10(d). *See* Nitto Chemical Industry Co. Ltd. v. Comer, 39 USPQ 1778, 1781-82 (D.D.C. 1994). That is, consignment of Express Mail correspondence to a first class mail bin at the USPS does not properly entrust the correspondence to the custody of the USPS for purposes of 37 CFR 1.10.

Further correspondence with respect to this matter should be addressed as follows:

By Mail:
Mail Stop PETITION
Commissioner for Patents
P. O. Box 1450
Alexandria, VA 22313-1450

By facsimile: (571) 273-8300
Attn: Office of Petitions

By hand: U. S. Patent and Trademark Office
Customer Service Window, Mail Stop Petitions
Randolph Building
401 Dulany Street
Alexandria, VA 22314

Telephone inquiries concerning this matter may be directed to Irvin Dingle at (571) 272-3210.

David Bucci
Petitions Examiner
Office of Petitions

UNITED STATES PATENT AND TRADEMARK OFFICE

Commissioner for Patents
United States Patent and Trademark Office
P.O. Box 1450
Alexandria, VA 22313-1450
www.uspto.gov

GIFFORD KRASS SPRINKLE
ANDERSON & CITKOWSKI, P.C.
P.O. BOX 7021
TROY, MI 48007-7021

COPY MAILED

JUL 06 2009

OFFICE OF PETITIONS

In re Application of :
Charles J. Cohen et al :
Application No. 11/412,252 :
Filed: April 25, 2006 :
Attorney Docket No. CYB-05903/03 :

DECISION GRANTING PETITION

This is a decision on the petition filed June 12, 2009, requesting reconsideration of a decision mailed April 13, 2009, which the above-identified application be accorded a filing date of April 25, 2006, rather than the presently accorded date of April 27, 2006. The petition is properly treated as a petition under 37 CFR 1.10(d).

Petitioner requests the earlier filing date on the basis that the application was purportedly deposited with Express Mail Service on April 25, 2006 pursuant to 37 CFR 1.10. While the copy of the Express Mail label receipt No. EV758723973US "date-in" was left blank, a copy of the USPS pickup service statement signed by an USPS employee and dated April 25, 2006 is provided. Petitioner is alleging that the correct date of mailing pursuant to 37 CFR 1.10 is April 25, 2006. The same Express Mail label number on the USPS pickup service statement also appears on the original application transmittal letter of record in the file.

The evidence presented is convincing that the Express Mail package was entrusted to the USPS on April 25, 2006, as shown by the pickup service statement. Accordingly, this application is entitled to a filing date of April 25, 2006, and has been so accorded.

In view of the above, the petition is **GRANTED**.

This application file is being referred to the Office of Patent Application Processing (OIPE) for **correction of the filing date to April 25, 2006 and for issuance of a corrected filing receipt.**

Telephone inquiries relating to this decision should be directed to Irvin Dingle at (571) 272-3210. Telephone inquiries related to OIPE processing should be directed to their hotline at (571) 272-4100.

/dab/
David Bucci
Petitions Examiner
Office of Petitions

UNITED STATES PATENT AND TRADEMARK OFFICE

Commissioner for Patents
United States Patent and Trademark Office
P.O. Box 1450
Alexandria, VA 22313-1450
www.uspto.gov

CHALKER FLORES, LLP
2711 LBJ FRWY.
SUITE 1036
DALLAS, TX 75234

COPY MAILED

NOV 0 7 2008

OFFICE OF PETITIONS

In re Application of :
Seong Jin Koh, et. al. :
Application No. 11/412,273 : ON PETITION
Filed: April 27, 2006 :
Attorney Docket No. UTAR:1021 :

This is a decision on the petition under 37 CFR 1.137(b), filed on September 9, 2008, to revive the above-identified application.

The application became abandoned for failure to file a reply to the Notice of Allowability mailed March 28, 2008. A Notice of Abandonment was mailed on July 31, 2008.

It is not apparent whether the statement of unintentional delay was signed by a person who would have been in a position of knowing that the entire delay in filing the required reply from the due date for the reply until the filing of a grantable petition pursuant to 37 CFR 1.137(b) was unintentional. Nevertheless, in accordance with 37 CFR 10.18, the statement is accepted as constituting a certification of unintentional delay. However, in the event that petitioner has no knowledge that the delay was unintentional, petitioner must make such an inquiry to ascertain that, in fact, the delay was unintentional. If petitioner discovers that the delay was intentional, petitioner must so notify the Office.

The petition satisfies the requirements of 37 CFR 1.137(b) in that petitioner has supplied (1) the reply in the form of eleven sheets of replacement drawings containing Figures 1A-14B; (2) the petition fee of $770; and (3) a proper statement of unintentional delay. Therefore, the petition is **GRANTED.**

The Power of Attorney filed on August 7, 2008 has been accepted and made of record. A Notice of Acceptance accompanies this decision.

The application file is being referred to the Office of Data Management to be processed into a patent.

Telephone inquiries concerning this decision should be directed to the undersigned at (571) 272-3226.

Andrea Smith
Petitions Examiner
Office of Petitions

Enclosure: Notice of Acceptance of Power of Attorney

UNITED STATES PATENT AND TRADEMARK OFFICE

UNITED STATES DEPARTMENT OF COMMERCE
United States Patent and Trademark Office
Address: COMMISSIONER FOR PATENTS
P.O. Box 1450
Alexandria, Virginia 22313-1450
www.uspto.gov

APPLICATION NUMBER	FILING OR 371(C) DATE	FIRST NAMED APPLICANT	ATTY. DOCKET NO./TITLE
11/412,273	04/27/2006	Seong Jin Koh	UTAR-1021

CONFIRMATION NO. 7506

34725
CHALKER FLORES, LLP
2711 LBJ FRWY
Suite 1036
DALLAS, TX 75234

POA ACCEPTANCE LETTER

Date Mailed: 11/07/2008

NOTICE OF ACCEPTANCE OF POWER OF ATTORNEY

This is in response to the Power of Attorney filed 08/07/2008.

The Power of Attorney in this application is accepted. Correspondence in this application will be mailed to the above address as provided by 37 CFR 1.33.

/amsmith/

Office of Data Management, Application Assistance Unit (571) 272-4000, or (571) 272-4200, or 1-888-786-0101

UNITED STATES PATENT AND TRADEMARK OFFICE

UNITED STATES DEPARTMENT OF COMMERCE
United States Patent and Trademark Office
Address: COMMISSIONER FOR PATENTS
P.O. Box 1450
Alexandria, Virginia 22313-1450
www.uspto.gov

APPLICATION NO.	FILING DATE	FIRST NAMED INVENTOR	ATTORNEY DOCKET NO.	CONFIRMATION NO.
11/412,286	04/27/2006	Zhimin Huo	90538SLP	7512

70523 7590 03/15/2010

Carestream Health, Inc.
150 Verona Street
Rochester, NY 14608

EXAMINER	
BITAR, NANCY	

ART UNIT	PAPER NUMBER
2624	

MAIL DATE	DELIVERY MODE
03/15/2010	PAPER

Please find below and/or attached an Office communication concerning this application or proceeding.

The time period for reply, if any, is set in the attached communication.

UNITED STATES PATENT AND TRADEMARK OFFICE

COMMISSIONER FOR PATENTS
UNITED STATES PATENT AND TRADEMARK OFFICE
WASHINGTON, DC 20231
www.uspto.gov

Carestream Health, Inc.
150 Verona Street
Rochester, NY 14608

MAIL

MAR 15 2010

DIRECTOR'S OFFICE
TECHNOLOGY CENTER 2600

In re Application of :
Zhimin Huo *et al.* :
Serial No.: 11/412, 286 :
Filed: April 27, 2006 : DECISION ON PETITION
For: **METHODS AND SYSTEMS FOR AUTOMATED DETECTION AND ANALYSIS OF LESION ON MAGNETIC RESONANCE IMAGES** : *ACCEPTANCE OF COLOR PHOTOGRAPHS*

This is a decision on the petition under 37 CFR §1.84(b)(2) filed December 29, 2009 requesting acceptance of color photographs.

The petition requests that the photographs identified in Figures 7I and 7J be accepted in lieu of black and white drawings.

A grantable petition under 37 C.F.R. §1.84(b)(2) must be accompanied by a fee set forth under 37 C.F.R. § 1.17(h), 3 (three) sets of the color drawings in question, and the specification must contain, or be amended to contain, the following language as the first paragraph in that portion of the specification relating to the brief description of the drawings:

"The file of this patent contains at least one drawing executed in color. Copies of this patent with color drawing(s) will be provided by the Patent and Trademark Office upon request and payment of the necessary fee."

The petition is **GRANTED**.

Doris To
Quality Assurance Specialist
Technology Center 2600
Communications

UNITED STATES PATENT AND TRADEMARK OFFICE

UNITED STATES DEPARTMENT OF COMMERCE
United States Patent and Trademark Office
Address: COMMISSIONER FOR PATENTS
P.O. Box 1450
Alexandria, Virginia 22313-1450
www.uspto.gov

BACHMAN & LAPOINTE, P.C. (P&W)
900 CHAPEL STREET
SUITE 1201
NEW HAVEN, CT 06510-2802

Mail Date: 05/07/2010

Applicant	: Christopher S. Walz	: DECISION ON REQUEST FOR
Patent Number	: 7625172	: RECALCULATION of PATENT
Issue Date	: 12/01/2009	: TERM ADJUSTMENT IN VIEW
Application No	: 11/412,291	: OF WYETH AND NOTICE OF INTENT TO
Filed	: 04/26/2006	: ISSUE CERTIFICATE OF CORRECTION
		:

The Request for Recalculation is **GRANTED** to the extent indicated.

The patent term adjustment has been determined to be **654** days. The USPTO will *sua sponte* issue a certificate of correction reflecting the amount of PTA days determined by the recalculation.

Prior to the issuance of the certificate of correction, the USPTO will afford patentee an opportunity to be heard and request reconsideration. Accordingly, patentee has **one month or thirty (30) days**, whichever is longer, to file a request for reconsideration of this patent term adjustment calculation. See 35 U.S.C. 154(b)(3)(B)(ii) and 37 CFR 1.322(a)(4). No extensions of time will be granted under 37 CFR 1.136.

Patentee should use document code PET.OP if electronically filing a request for reconsideration of this patent term adjustment calculation. The patentee must also include the information required by 37 CFR 1.705(b)(2) and the fee required by 37 CFR 1.18(e). If patentee does not file a timely request for reconsideration of this patent term adjustment calculation including the information required by 37 CFR 1.705(b)(2) and the fee required by 37 CFR 1.18(e), the USPTO will issue a certificate of correction reflecting the PTA determination noted above.

Patentee should be aware that in order to preserve the right to review in the United States District Court for the District of Columbia of the USPTO patent term adjustment determination, patentee must ensure that he or she also take the steps required under 35 U.S.C. 154(b)(4)(A) in a timely manner. Nothing in the request for recalculation should be construed as providing an alternative time frame for commencing a civil action under 35 U.S.C. 154(b)(4)(A).

Any questions concerning this decision should be directed to the Office of Patent Legal Administration at 571-272-7702.

UNITED STATES PATENT AND TRADEMARK OFFICE

UNITED STATES DEPARTMENT OF COMMERCE
United States Patent and Trademark Office
Address: COMMISSIONER FOR PATENTS
P.O. Box 1450
Alexandria, Virginia 22313-1450
www.uspto.gov

LOUIS J. WILLE
BRISTOL-MYERS SQUIBB COMPANY
PATENT DEPARTMENT
P O BOX 4000
PRINCETON, NJ 08543-4000

Mail Date: 05/18/2010

Applicant	: Robert G. Johnson JR.	: DECISION ON REQUEST FOR
Patent Number	: 7691392	: RECALCULATION of PATENT
Issue Date	: 04/06/2010	: TERM ADJUSTMENT IN VIEW
Application No	: 11/412,298	: OF WYETH
Filed	: 04/26/2006	:
		:

The Patentee's Request for Recalculation is **DISMISSED.**

This Request is deemed ineligible for consideration for one or more of the following reasons:

(A). The patent for which PTA recalculation is requested is either a design or reissue application or is a reexamination proceeding;

(B). The patent for which PTA recalculation is requested resulted from a utility or plant application filed under 35 USC 111(a) before May 29, 2000 and no CPA filed in the application on/after May 29, 2000;

(C). The patent for which PTA recalculation is requested resulted from an international application in which the international filing date was before May 29, 2000 and no CPA filed in the application on/after May 29, 2000;

(D). The patent for which PTA recalculation is requested issued on/after March 2, 2010;

(E). The Request for Recalculation was filed more than 180 days after the grant date of the patent and the request was not filed within two months of a dismissal of a request for reconsideration of the of the patent term under 37 CFR 1.705(d);

(F). The Request for Recalculation is not solely limited to USPTO pre-Wyeth interpretation of 35 U.S.C. 154(b)(2)(A);

or

(G). A civil action was filed pursuant to 35 U.S.C. 154(b)(4)(A)concerning the same patent at issue in this request.

Patentee may file a reply to this decision dismissing the Request for Recalculation. Patentee must file such reply within one month or thirty days, whichever is longer, of the mail date of the decision dismissing the Request for Recalculation. No fee is required if patentee is asserting in the reply that the dismissal for ineligibility is improper.

Patentee should use document code PET.OP if electronically filing a reply to this dismissal. If the USPTO finds that the request was improperly deemed ineligible, the USPTO will mail applicant a recalculation determination.

Patentee should be aware that in order to preserve the right to review in the United States District Court for the District of Columbia of the USPTO patent term adjustment determination, patentee must ensure that he or she also take the steps required under 35 U.S.C. 154(b)(4)(A). Nothing in the request for recalculation should be construed as providing an alternative time frame for commencing a civil action under 35 U.S.C. 154 (b)(4)(A).

Any questions concerning this decision should be directed to the Office of Patent Legal Administration at 571-272-7702.

UNITED STATES PATENT AND TRADEMARK OFFICE

UNITED STATES DEPARTMENT OF COMMERCE
United States Patent and Trademark Office
Address: COMMISSIONER FOR PATENTS
P.O. Box 1450
Alexandria, Virginia 22313-1450
www.uspto.gov

APPLICATION NO.	FILING DATE	FIRST NAMED INVENTOR	ATTORNEY DOCKET NO.	CONFIRMATION NO.
11/412,325	04/27/2006	Stephane Bejanin	G-182US02DIV	2385

7590 03/14/2008

SALIWANCHIK LLOYD & SALIWANCHIK
A PROFESSIONAL ASSOCIATION
PO BOX 142950
GAINESVILLE, FL 32614-2950

EXAMINER	
ZHOU, SHUBO	

ART UNIT	PAPER NUMBER
1631	

MAIL DATE	DELIVERY MODE
03/14/2008	PAPER

DECISION GRANTING PETITION UNDER 37 CFR 1.138(d)

The declaration of express abandonment is recognized

This is in response to the petition under 37 CFR 1.138(d), requesting for a refund of any previously paid search fee and excess claims fee in the above-identified application.

The petition is granted.

The express abandonment is recognized. Any previously paid search fee and excess claims fee are hereby refunded.

Telephone inquiries should be directed to the Office of Data Management at (571) 272-4200.

Patent Publication Branch
Office of Data Management

UNITED STATES PATENT AND TRADEMARK OFFICE

Commissioner for Patents
United States Patent and Trademark Office
P.O. Box 1450
Alexandria, VA 22313-1450
www.uspto.gov

FINNEGAN, HENDERSON, FARABOW, GARRETT & DUNNER LLP
901 NEW YORK AVENUE, NW
WASHINGTON DC 20001-4413

COPY MAILED

FEB 0 5 2007

OFFICE OF PETITIONS

In re Application of	:	
Karl L. Ginter et al	:	
Application No. 11/412,348	:	DECISION GRANTING
Filed: April 26, 2006	:	PETITION
Attorney Docket No. 07451.0005-07000	:	

This is a decision on the petition, filed September 29, 2006, requesting that the above-identified application be accorded a filing date of April 26, 2006, rather than the presently accorded date of April 27, 2006. The petition is properly treated as a petition under 37 CFR 1.10(c).

Petitioner alleges that the application was deposited in Express Mail Service on April 26, 2006. In support, the petition is accompanied by a copy of Express Mail receipt No. EV847360312US (the same Express Mail number found on the original application papers located in the official file) showing a "date in" of April 26, 2006.

The Office considers the date the paper or fee is shown to have been deposited as "Express Mail" to be the "date-in" on the Express Mail label; MPEP 513. The evidence is convincing that the application was deposited as "Express Mail" with the U. S. Postal Service on April 26, 2006.

In view of the above, the petition is **GRANTED**.

This application file is being referred to the Office of Initial Patent Examination (OIPE) for correction of the filing date to **April 26, 2006** and for issuance of a corrected filing receipt.

Telephone inquiries relating to this decision should be directed the undersigned at (571) 272-3208. Telephone inquiries related to OIPE processing should be directed to their hotline at (571) 272-4100.

Karen Creasy

Karen Creasy
Petitions Examiner
Office of Petitions

UNITED STATES PATENT AND TRADEMARK OFFICE

Commissioner for Patents
United States Patent and Trademark Office
P.O. Box 1450
Alexandria, VA 22313-1450
www.uspto.gov

HONEYWELL INTERNATIONAL INC.
101 COLUMBIA ROAD
P O BOX 2245
MORRISTOWN, NJ 07962-2245

COPY MAILED

DEC 0 5 2006

OFFICE OF PETITIONS

In re Application of :
Matthew J. Dixon et al :
Application No. 11/412,362 : DECISION GRANTING
Filed: April 26, 2006 : PETITION
Attorney Docket No. HOO11586-3144 :

This is a decision on the petition, filed June 29, 2006, requesting that the above-identified application be accorded a filing date of April 26, 2006, rather than the presently accorded date of April 27, 2006. The petition is properly treated as a petition under 37 CFR 1.10(c).

Petitioner alleges that the application was deposited in Express Mail Service on April 26, 2006. In support of this allegation, the petition is accompanied by a copy of Express Mail receipt No. EV 825637016 US (the same Express Mail number found on the original application papers located in the official file) showing a "date in" of April 26, 2006, as well as a Scottsdale, Arizona, stamped postal receipt date of April 26, 2006.

The Office considers the date the paper or fee is shown to have been deposited as "Express Mail" to be the "date-in" on the Express Mail label; MPEP 513. The evidence is convincing that the application was deposited as "Express Mail" with the U. S. Postal Service on April 26, 2006.

In view of the above, the petition to accord this application a filing date of April 26, 2006 is **GRANTED**. A corrected Filing Receipt has been mailed under separate cover.

This application file will, in due course, be referred to Technology Center Art Unit 3753 for examination in due course.

Telephone inquiries relating to this decision should be directed the undersigned at (571) 272-3218.

Frances Hicks
Petitions Examiner
Office of Petitions

UNITED STATES PATENT AND TRADEMARK OFFICE

UNITED STATES DEPARTMENT OF COMMERCE
United States Patent and Trademark Office
Address: COMMISSIONER FOR PATENTS
P.O. Box 1450
Alexandria, Virginia 22313-1450
www.uspto.gov

KIMBERLY-CLARK WORLDWIDE, INC.
Tara Pohlkotte
2300 Winchester Rd.
NEENAH, WI 54956

Mail Date: 04/21/2010

Applicant	: Andrew Mark Long	: DECISION ON REQUEST FOR
Patent Number	: 7595734	: RECALCULATION of PATENT
Issue Date	: 09/29/2009	: TERM ADJUSTMENT IN VIEW
Appliction No	: 11/412,364	: OF WYETH AND NOTICE OF INTENT TO
Filed	: 04/26/2006	: ISSUE CERTIFICATE OF CORRECTION
		:

The Request for Recalculation is **GRANTED** to the extent indicated.

The patent term adjustment has been determined to be **666** days. The USPTO will *sua sponte* issue a certificate of correction reflecting the amount of PTA days determined by the recalculation.

Prior to the issuance of the certificate of correction, the USPTO will afford patentee an opportunity to be heard and request reconsideration. Accordingly, patentee has **one month or thirty (30) days**, whichever is longer, to file a request for reconsideration of this patent term adjustment calculation. See 35 U.S.C. 154(b)(3)(B)(ii) and 37 CFR 1.322(a)(4). No extensions of time will be granted under 37 CFR 1.136.

Patentee should use document code PET.OP if electronically filing a request for reconsideration of this patent term adjustment calculation. The patentee must also include the information required by 37 CFR 1.705(b)(2) and the fee required by 37 CFR 1.18(e). If patentee does not file a timely request for reconsideration of this patent term adjustment calculation including the information required by 37 CFR 1.705(b)(2) and the fee required by 37 CFR 1.18(e), the USPTO will issue a certificate of correction reflecting the PTA determination noted above.

Patentee should be aware that in order to preserve the right to review in the United States District Court for the District of Columbia of the USPTO patent term adjustment determination, patentee must ensure that he or she also take the steps required under 35 U.S.C. 154(b)(4)(A) in a timely manner. Nothing in the request for recalculation should be construed as providing an alternative time frame for commencing a civil action under 35 U.S.C. 154(b)(4)(A).

Any questions concerning this decision should be directed to the Office of Patent Legal Administration at 571-272-7702.

UNITED STATES PATENT AND TRADEMARK OFFICE

Commissioner for Patents
United States Patent and Trademark Office
P.O. Box 1450
Alexandria, VA 22313-1450
www.uspto.gov

PAULEY, PETERSEN & ERICKSON
SUITE 365
2800 WEST HIGGINS ROAD
HOFFMAN ESTATES, IL 60195

COPY MAILED

FEB 11 2008

OFFICE OF PETITIONS

In re Application of :
Charles L. Davis :
Application No. 11/412,370 : DECISION ON PETITION
Filed: April 27, 2006 : TO WITHDRAW
Attorney Docket No. HE-103 : FROM RECORD
:

This is a decision on the Request to Withdraw as attorney or agent of record under 37 C.F.R. § 1.36(b), filed August 20, 2007.

The request is **APPROVED**.

A grantable request to withdraw as attorney/agent of record must be signed by every attorney/agent seeking to withdraw or contain a clear indication that one attorney is signing on behalf of another/others. A request to withdraw will not be approved unless at least 30 (thirty) days would remain between the date of approval and the later of the expiration date of a time to file a response or the expiration date of the maximum time period which can be extended under 37 C.F.R. § 1.136(a).

The request was signed by Mark D. Swanson on behalf of all attorneys of record who are associated with customer No. 42419.

All attorneys/agents associated with the Customer Number 42419 have been withdrawn.

Applicant is reminded that there is no attorney of record at this time.

The correspondence address of record has been changed and the new correspondence address is the address indicated below.

The application became abandoned for failure to timely respond to the outstanding Office action mailed June 15, 2007.

Telephone inquiries concerning this decision should be directed to undersigned at 571-272-1642.

April M. Wise
Petitions Examiner
Office of Petitions

cc: CHARLES L. DAVIS
1500 NW SALTZMAN ROAD
PORTLAND, OR 97229

UNITED STATES PATENT AND TRADEMARK OFFICE

UNITED STATES DEPARTMENT OF COMMERCE
United States Patent and Trademark Office
Address: COMMISSIONER FOR PATENTS
P.O. Box 1450
Alexandria, Virginia 22313-1450
www.uspto.gov

APPLICATION NUMBER	FILING OR 371(C) DATE	FIRST NAMED APPLICANT	ATTY. DOCKET NO./TITLE
11/412,370	04/27/2006	Charles L. Davis	HE-103

CONFIRMATION NO. 7868

Pauley Petersen & Erickson
Suite 365
2800 West Higgins Road
Hoffman Estates, IL 60195

POWER OF ATTORNEY NOTICE

OC000000028219451

Date Mailed: 02/11/2008

NOTICE REGARDING CHANGE OF POWER OF ATTORNEY

This is in response to the Power of Attorney filed 08/20/2007.

- The withdrawal as attorney in this application has been accepted. Future correspondence will be mailed to the new address of record. 37 CFR 1.33.

/amwise/

Office of Initial Patent Examination (571) 272-4000 or 1-800-PTO-9199

UNITED STATES PATENT AND TRADEMARK OFFICE

UNITED STATES DEPARTMENT OF COMMERCE
United States Patent and Trademark Office
Address: COMMISSIONER FOR PATENTS
P.O. Box 1450
Alexandria, Virginia 22313-1450
www.uspto.gov

MYERS BIGEL SIBLEY & SAJOVEC
PO BOX 37428
RALEIGH, NC 27627

Mail Date: 04/21/2010

Applicant	: Ban P. Loh	: DECISION ON REQUEST FOR
Patent Number	: 7655957	: RECALCULATION of PATENT
Issue Date	: 02/02/2010	: TERM ADJUSTMENT IN VIEW
Appliction No	: 11/412,381	: OF WYETH AND NOTICE OF INTENT TO
Filed	: 04/27/2006	: ISSUE CERTIFICATE OF CORRECTION
		:

The Request for Recalculation is **GRANTED** to the extent indicated.

The patent term adjustment has been determined to be **578** days. The USPTO will *sua sponte* issue a certificate of correction reflecting the amount of PTA days determined by the recalculation.

Prior to the issuance of the certificate of correction, the USPTO will afford patentee an opportunity to be heard and request reconsideration. Accordingly, patentee has **one month or thirty (30) days**, whichever is longer, to file a request for reconsideration of this patent term adjustment calculation. See 35 U.S.C. 154(b)(3)(B)(ii) and 37 CFR 1.322(a)(4). No extensions of time will be granted under 37 CFR 1.136.

Patentee should use document code PET.OP if electronically filing a request for reconsideration of this patent term adjustment calculation. The patentee must also include the information required by 37 CFR 1.705(b)(2) and the fee required by 37 CFR 1.18(e). If patentee does not file a timely request for reconsideration of this patent term adjustment calculation including the information required by 37 CFR 1.705(b)(2) and the fee required by 37 CFR 1.18(e), the USPTO will issue a certificate of correction reflecting the PTA determination noted above.

Patentee should be aware that in order to preserve the right to review in the United States District Court for the District of Columbia of the USPTO patent term adjustment determination, patentee must ensure that he or she also take the steps required under 35 U.S.C. 154(b)(4)(A) in a timely manner. Nothing in the request for recalculation should be construed as providing an alternative time frame for commencing a civil action under 35 U.S.C. 154(b)(4)(A).

Any questions concerning this decision should be directed to the Office of Patent Legal Administration at 571-272-7702.

UNITED STATES PATENT AND TRADEMARK OFFICE

Commissioner for Patents
United States Patent and Trademark Office
P.O. Box 1450
Alexandria, VA 22313-1450
www.uspto.gov

HAYNES AND BOONE, LLP
901 MAIN STREET
SUITE 3100
DALLAS, TX 75202

COPY MAILED

APR 0 2 2007

OFFICE OF PETITIONS

In re Application of :

BLINCOE, Patrick S. et al. :
Application No. 11/412,387 :
Filed: April 27, 2006 :
Attorney Docket No. **23667.181 (CHM-027440)** :

DECISION ON PETITION
TO WITHDRAW
FROM RECORD

This is a decision on the Request to Withdraw as attorney or agent of record under 37 C.F.R. § 1.36(b), filed February 15, 2006.

The request is **NOT APPROVED**.

A grantable request to withdraw as attorney/agent of record must be signed by every attorney/agent seeking to withdraw or contain a clear indication that one attorney is signing on behalf of another/others. A request to withdraw will not be approved unless at least 30 (thirty) days would remain between the date of approval and the later of the expiration date of a time to file a response or the expiration date of the maximum time period which can be extended under 37 C.F.R. § 1.136(a).

The request cannot be approved because no reasons for withdrawal have been provided. The Office cannot, at this time, determine whether practitioner's request is one of the mandatory or permissive reasons enumerated in 37 CFR 10.40. Any subsequent requests must include reasons for withdrawal. Please note that there is a space provided for on PTO/SB/83 (Request to Withdraw as Attorney or Agent) to supply practitioner's reasons.

All future communications from the Office will continue to be directed to the above-listed address until otherwise notified by applicant.

There are no pending office actions at the present time.

Telephone inquiries concerning this decision should be directed to Tredelle Jackson at 571-272- 2783.

Monica A. Graves
Petitions Examiner
Office of Petitions

cc: **TODD MATTINGLY**
KING & SPALDING, L.L.P.
1100 LOUISIANA
SUITE 4000
HOUSTON, TX 77002

UNITED STATES PATENT AND TRADEMARK OFFICE

Commissioner for Patents
United States Patent and Trademark Office
P.O. Box 1450
Alexandria, VA 22313-1450
www.uspto.gov

CROSSLEY PATENT LAW
236 SOUTH THIRD STREET
#287
MONTROSE CO 81401

COPY MAILED

MAR 0 5 2009

OFFICE OF PETITIONS

In re Application of	:	
Walter Wynter	:	
Application No. 11/412,392	:	DECISION ON PETITION
Filed: April 28, 2006	:	
Attorney Docket No. 06-02-13.4PA	:	

This is a decision on the petition under the unintentional provisions of 37 CFR 1.137(b), filed September 25, 2008, to revive the above-identified application.

The petition is **GRANTED**.

The application became abandoned for failure to reply in a proper and timely manner to the non-final Office action mailed March 21, 2008, which set a shortened statutory period for reply of three (3) months. No extensions of time under the provisions of 37 CFR 1.136(a) were obtained. Accordingly, the application became abandoned on June 22, 2008. A Notice of Abandonment was mailed October 8, 2008.

The petition satisfies the requirements of 37 CFR 1.137(b) in that petitioner has supplied (1) the reply in the form of an Amendment, (2) the petition fee of $770.00, and (3) an adequate statement of unintentional delay.

Telephone inquiries concerning this decision should be directed to Joan Olszewski at (571) 272-7751.

This application is being referred to Technology Center AU 3632 for appropriate action by the Examiner in the normal course of business on the reply received.

/Liana Walsh/
Liana Walsh
Petitions Examiner
Office of Petitions

UNITED STATES PATENT AND TRADEMARK OFFICE

Commissioner for Patents
United States Patent and Trademark Office
P.O. Box 1450
Alexandria, VA 22313-1450
www.uspto.gov

CROSSLEY PATENT LAW
400 SOUTH THIRD STREET
MONTROSE, CO 81401

COPY MAILED

JUN 22 2006

OFFICE OF PETITIONS

In re Application of	:	
James S. Andrews	:	
Application No. 11/412,393	:	DECISION ON PETITION
Filed: April 28, 2006	:	TO MAKE SPECIAL UNDER
Attorney Docket No. 06-03-16PA	:	37 CFR 1.102(c)(1)

This is a decision on the petition under 37 CFR 1.102(c)(1), filed April 28, 2006, to make the above-identified application special based on applicant's age as set forth in M.P.E.P. § 708.02, Section IV.

The petition is **GRANTED**.

A grantable petition to make an application special under 37 CFR 1.102(c)(1) and MPEP § 708.02, Section IV: Applicant's Age must be accompanied by evidence showing that at least one of the applicants is 65 years of age, or more, such as a birth certificate or a statement by applicant. No fee is required.

The petition includes a copy of a birth certificate that the applicant, James S. Andrews, is over sixty five (65) years of age. Accordingly, the above-identified application has been accorded "special" status.

Telephone inquiries concerning this decision should be directed to Wan Laymon at 571-272-3220.

This application is being referred to the Office of Initial Patent Examination to await a reply to the Notice to File Corrected Application Papers (Notice) mailed May 22, 2006 and preexamination processing. This application will be accorded "special" status when preexamination processing is done.

Wan Laymon
Petitions Examiner
Office of Petitions

UNITED STATES PATENT AND TRADEMARK OFFICE

Commissioner for Patents
United States Patent and Trademark Office
P.O. Box 1450
Alexandria, VA 22313-1450
www.uspto.gov

TROUTMAN SANDERS LLP
BANK OF AMERICA PLAZA
600 PEACHTREE STREET, N.E.
SUITE 5200
ATLANTA GA 30308-2216

MAILED

NOV 20 2009

OFFICE OF PETITIONS

In re Application of :
Motooka et al. :
Application No. 11/412,404 : RESPONSE TO PETITION
Filed: April 27, 2006 :
Attorney Docket No. MIZ97 :

This is a response to the petition under 37 CFR 1.59(b), filed July 8, 2009, to expunge information from the above identified application.

The petition is **granted**.

On June 22, 2009, a Response and Amendment to the Office action mailed March 20, 2009 was unintentionally submitted. Petitioner desires to have that Response and Amendment expunged in favor of the Response and Amendment filed July 8, 2009.

Upon a showing satisfactory to the Director, information, other than that forming part of the original disclosure may be expunged from an application. The petition satisfies requirements A-F of MPEP section 724.05 II for expunging information that is unintentionally submitted in an application. As noted in the Notice of Allowance mailed November 10, 2009, the allowance was in response to the Response and Amendment filed July 8, 2009 and not the Response and Amendment filed June 22, 2009.

In a paper file the unintentionally submitted exhibits could, but not necessarily would, have been physically removed from the file wrapper and returned to applicant; in the IFW realm the corresponding action(s) is to close the document and also remove such from the listing of "Public[ly available] Documents." It is agreed that it would be appropriate in this instance to close the Response and Amendment filed June 22, 2009, and also remove such from the listing of publicly available documents for this Image File Wrapper (IFW).

As a condition of this favorable treatment petitioner is required to maintain the material in question during the enforceable life of any patent arising from this application, or any patent claiming benefit of this application.

Telephone inquiries concerning this communication should be directed to the undersigned at (571) 272-6692.

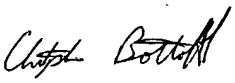

Christopher Bottorff
Petitions Examiner
Office of Petitions

UNITED STATES PATENT AND TRADEMARK OFFICE

Commissioner for Patents
United States Patent and Trademark Office
P.O. Box 1450
Alexandria, VA 22313-1450
www.uspto.gov

MAILED

JUN 07 2010

OFFICE OF PETITIONS

FOLEY HOAG, LLP
PATENT GROUP, WORLD TRADE CENTER WEST
155 SEAPORT BLVD
BOSTON, MA 02110

In re Application of
MCDOUGAL, W. Scott et al.
Application No. 11/412,407
Filed: April 27, 2006
Attorney Docket No. **PMX-004.02**

DECISION ON PETITION
TO WITHDRAW
FROM RECORD

This is a decision on the Request to Withdraw as attorney or agent of record under 37 C.F.R. § 1.36(b), filed April 27, 2010.

The request is not approved because a revocation of power of attorney has been previously filed as **moot**.

A review of the file record indicates that the power of attorney to FOLEY HOAG, LLP has been revoked by the assignee of the patent application on May 21, 2010. Accordingly, the request to withdraw under 37 C.F.R. § 1.36(b) is moot.

All future communications from the Office will continue to be directed to the below-listed address until otherwise notified by applicant.

Telephone inquires concerning this decision should be directed to Tredelle Jackson at 571-272-2783.

/Tredelle D. Jackson/
Petitions Examiner
Office of Petitions

cc: **BUCHANAN, INGERSOLL & ROONEY PC**
POST OFFICE BOX 1404
ALEXANDRIA VA 22313-1404

UNITED STATES PATENT AND TRADEMARK OFFICE

Commissioner for Patents
United States Patent and Trademark Office
P.O. Box 1450
Alexandria, VA 22313-1450
www.uspto.gov

MAILED

JUL 19 2010

OFFICE OF PETITIONS

HOFFMANN-LA ROCHE INC.
PATENT LAW DEPARTMENT
340 KINGSLAND STREET
NUTLEY NJ 07110

In re Application of
Alanine, et al.
Application No. 11/412,432
Filed: April 27, 2006
Attorney Docket Number: 23092 US

: ON REQUEST FOR
: RECONSIDERATION OF
: PATENT TERM ADJUSTMENT

This is a decision on the petition under 37 CFR 1.705(b), filed January 20, 2010. Applicants believe that they should be accorded an additional PTA of 442 days. Applicants request this correction solely on the basis that the Office will take in excess of three years to issue this patent.

As the instant application for patent term adjustment requests reconsideration of the patent term adjustment solely as it relates to the Office's failure to issue the patent within 3 years of the filing date, the application for patent term adjustment under 37 CFR 1.705(b) is **DISMISSED as PREMATURE**.

Knowledge of the actual date the patent issues is required to calculate the amount, if any, of additional patent term patentee is entitled to for Office failure to issue the patent within 3 years. See § 1.702(b). (This is true even where a request for continued examination (RCE) was filed). The computer will not undertake the § 1.702(b) calculation until the actual date of issuance of the patent has been determined. Likewise, the computer will not calculate any further Office delay under § 1.702(a)(4) or applicant delay under § 1.704(c)(10) until the actual date of issuance of the patent has been determined. As such, the Office can not make a determination on the correctness of the patent term adjustment until the patent has issued.

Requesting reconsideration of the patent term adjustment to be indicated on the patent under 37 CFR 1.705(b) based on the initial determination of patent term adjustment and a projected issuance date of the patent (or even the filing date of the request for continued examination) is premature. Accordingly, it is appropriate to dismiss as premature such a request.

Rather than file a request for reconsideration of patent term adjustment under 37 CFR 1.705(b) contesting the 37 CFR 1.702(b) calculation at the time of the mailing of the notice of allowance, applicants are advised that they may wait until the time of the issuance of the patent and file a request for reconsideration of the patent term adjustment pursuant to 37 CFR 1.705(d). As the USPTO does not calculate the amount of time earned pursuant to 37 CFR 1.702(b) until the time of the issuance of the patent, the Office will consider any request for reconsideration of the patent term adjustment due to an error in the calculation of 37 CFR 1.702(b) to be timely if the request for reconsideration is filed within two months of the issuance of the patent. However, as to all other bases for contesting the initial determination of patent term adjustment received with the notice of allowance, applicant must timely file an application for patent term adjustment prior to the payment of the issue fee[1].

In view thereof, the correct determination of PTA prior to issuance is **five hundred ninety-five (595) days** (652 days of PTO delay, reduced by 57 days of Applicant delay).

Receipt of the $200.00 fee set forth in 37 CFR 1.18(e) is acknowledged.

The application is being forwarded to the Office of Data Management for issuance of the patent.

Telephone inquiries specific to this decision should be directed to Petitions Attorney Cliff Congo at (571) 272-3207.

Anthony Knight
Director
Office of Petitions

[1] For example, if applicant disputes both the calculation of patent term adjustment under 37 CFR 1.702(a)(1) for Office failure to mail a first Office action or notice of allowance not later than fourteen months after the date on which the application was filed and under 37 CFR 1.702(b) for Office failure to issue a patent within three years of the actual filing date of the application, then applicant must still timely file an application for patent term adjustment prior to the payment of the issue fee to contest the calculation of Office delay in issuing a first Office action or notice of allowance. See 37 CFR 1.705(b) and 35 U.S.C. 154(b)(3)(B). A dispute as to the calculation of the §1.702(a)(1) period raised on request for reconsideration of patent term adjustment under 37 CFR 1.705(d) will be dismissed as untimely filed.

UNITED STATES PATENT AND TRADEMARK OFFICE

Commissioner for Patents
United States Patent and Trademark Office
P.O. Box 1450
Alexandria, VA 22313-1450
www.uspto.gov

Agilent Technologies, Inc.
Attn: Michael Beck, Esq.
3500 Deer Creek Road
Mail Stop 26U-25
Palo Alto CA 94304-1317

COPY MAILED

MAY 23 2007

OFFICE OF PETITIONS

In re Application of :
Deng et al. :
Application No. 11/412,437 :
Filed: 04/27/2006 :
Attorney Docket No. 2003309-0049 :
(10030091-1) :

This is in response to the petition under 37 CFR 1.47(a), filed November 15, 2006. Applicants obtained an extension of time for response within the fourth month. Accordingly, the petition is filed timely. The petition was recently forwarded to the Office of Petitions for a decision on the merits. The Office sincerely apologizes for any inconvenience.

The petition is **dismissed**.

Applicants are given TWO (2) MONTHS from the mailing date of this decision to reply, correcting the below-noted deficiencies. Any reply should be entitled "Request for Reconsideration of Petition Under 37 CFR 1.47(a)," and should address the deficiencies noted below, except that the reply may include an oath or declaration executed by the non-signing inventor. Failure to respond will result in abandonment of the application. Any extensions of time will be governed by 37 CFR 1.136(a).

On November 15, 2006, applicants filed the present petition, a declaration executed by joint inventors on behalf of Raymond Tabibiazar, and a request for a four-month extension of time to reply, as well as paid the requisite fees. In the petition, applicants asserted that Mr. Tabibiazar refused to sign the declaration. Applicants stated that they presented each inventor with a copy of the application as filed and a declaration for their signature as evidenced by the emails sent September 11 and 12, 2006. A copy of the emails accompany the petition.

A grantable petition under 37 CFR 1.47(a) requires: (1) proof that the non-signing inventor cannot be reached or refuses to sign the oath or declaration after having been presented with the application papers (specification, claims and drawings); (2) an acceptable oath or declaration in compliance with

35 U.S.C. §§ 115 and 116; (3) the petition fee; and (4) a statement of the last known address of the non-signing inventor. Applicants lacks item (1) as set forth above.

As to item (1), applicants have not provided sufficient proof that the non-signing inventor was sent or presented with a complete copy of the application as filed (specification, including the claims, drawings, if any, and the declaration). See MPEP 409.03(d).

Applicants stated that a copy of the application as filed and a declaration were sent via email to Mr. Tabibiazar. However, applicants have not submitted sufficient proof that Mr. Tabibiazar received the email message containing the application papers. Moreover, applicants did not provide any evidence that the email address was a current address, which was monitored regularly by Mr. Tabibiazar.

Accordingly, in any renewed petition, applicants must show that the non-signing inventor was presented with the application papers (specification, including the claims, drawings, if any, and the declaration) for the present application. In this case, as the applicants are aware of Mr. Tabibiazar's last known address, it is suggested that applicants mail a copy of the application papers, return receipt requested, to that address.

Applicants may show that a copy of the application was mailed or presented to the non-signing inventor for review by providing a copy of the cover letter transmitting the application papers (specification, including claims, drawings, if any, and the declaration) to the non-signing inventor or details given in an affidavit or declaration of facts by a person having first-hand knowledge of the details. If the application is returned as undeliverable, applicants should submit a copy of the envelope, showing that the copy of the application papers sent to the last known address of the non-signing inventor was returned as undeliverable. Likewise, if the non-signing inventor refuses to execute the declaration in writing, applicants must submit a copy of that written refusal with any renewed petition. If the refusal was made orally to a person, then that person must provide details of the refusal in an affidavit or declaration of fact.

Further correspondence with respect to this matter should be addressed as follows:

By mail: Mail Stop Petition
Commissioner for Patents
P.O. Box 1450
Alexandria, VA 22313-1450

By FAX: (571) 272-8300
Attn: Office of Petitions

By hand: Customer Service Window
Randolph Building
401 Dulany Street
Alexandria, VA 22314

Telephone inquiries related to this decision may be directed to the undersigned at (571) 272-3211.

Christina Tartera Donnell

Christina Tartera Donnell
Senior Petitions Attorney
Office of Petitions

UNITED STATES PATENT AND TRADEMARK OFFICE

Commissioner for Patents
United States Patent and Trademark Office
P.O. Box 1450
Alexandria, VA 22313-1450
www.uspto.gov

AGILENT TECHNOLOGIES INC.
INTELLECTUAL PROPERTY
ADMINISTRATION, LEGAL DEPT.
MS BLDG. E P.O. BOX 7599
LOVELAND CO 80537

COPY MAILED

APR 23 2009

OFFICE OF PETITIONS

In re Application of
David Deng et al
Application No. 11/412,437
Filed: Ajpril 27, 2006
Attorney Docket No. 2003309-0049
(10030091-1)

DECISION ON PETITION

This is a decision on the petition under the unintentional provisions of 37 CFR 1.137(b), filed December 1, 2008, to revive the above-identified application.

The petition is **GRANTED**.

The petition satisfies the conditions for revival pursuant to the provisions of 37 CFR 1.137(b) in that (1) the reply in the form of an executed declaration; (2) the petition fee; and (3) the required statement of unintentional delay have been received. Accordingly, the reply to the Notice mailed May 11, 2006, is accepted as having been unintentionally delayed.

Telephone inquiries concerning this decision should be directed to the undersigned at (571) 272-3208.

This application is being referred to Technology Center AU 1646 to await a reply to the nonfinal rejection mailed November 19, 2008.

Karen Creasy
Petitions Examiner
Office of Petitions

UNITED STATES PATENT AND TRADEMARK OFFICE

UNITED STATES DEPARTMENT OF COMMERCE
United States Patent and Trademark Office
Address: COMMISSIONER FOR PATENTS
P.O. Box 1450
Alexandria, Virginia 22313-1450
www.uspto.gov

COATS & BENNETT/SONY ERICSSON
1400 CRESCENT GREEN
SUITE 300
CARY, NC 27518

Mail Date: 04/21/2010

Applicant	: Anthony J. Sammarco	: DECISION ON REQUEST FOR
Patent Number	: 7583956	: RECALCULATION of PATENT
Issue Date	: 09/01/2009	: TERM ADJUSTMENT IN VIEW
Appliction No	: 11/412,445	: OF WYETH AND NOTICE OF INTENT TO
Filed	: 04/27/2006	: ISSUE CERTIFICATE OF CORRECTION
		:

The Request for Recalculation is **GRANTED** to the extent indicated.

The patent term adjustment has been determined to be **473** days. The USPTO will *sua sponte* issue a certificate of correction reflecting the amount of PTA days determined by the recalculation.

Prior to the issuance of the certificate of correction, the USPTO will afford patentee an opportunity to be heard and request reconsideration. Accordingly, patentee has **one month or thirty (30) days**, whichever is longer, to file a request for reconsideration of this patent term adjustment calculation. See 35 U.S.C. 154(b)(3)(B)(ii) and 37 CFR 1.322(a)(4). No extensions of time will be granted under 37 CFR 1.136.

Patentee should use document code PET.OP if electronically filing a request for reconsideration of this patent term adjustment calculation. The patentee must also include the information required by 37 CFR 1.705(b)(2) and the fee required by 37 CFR 1.18(e). If patentee does not file a timely request for reconsideration of this patent term adjustment calculation including the information required by 37 CFR 1.705(b)(2) and the fee required by 37 CFR 1.18(e), the USPTO will issue a certificate of correction reflecting the PTA determination noted above.

Patentee should be aware that in order to preserve the right to review in the United States District Court for the District of Columbia of the USPTO patent term adjustment determination, patentee must ensure that he or she also take the steps required under 35 U.S.C. 154(b)(4)(A) in a timely manner. Nothing in the request for recalculation should be construed as providing an alternative time frame for commencing a civil action under 35 U.S.C. 154(b)(4)(A).

Any questions concerning this decision should be directed to the Office of Patent Legal Administration at 571-272-7702.

UNITED STATES PATENT AND TRADEMARK OFFICE

COMMISSIONER FOR PATENTS
UNITED STATES PATENT AND TRADEMARK OFFICE
P.O. BOX 1450
ALEXANDRIA, VA 22313-1450
www.uspto.gov

Mahmoud Aliasgarian
435 Hamner Cir.
Windsor ON N9E 4P8 CA CANADA

COPY MAILED

JUN 0 8 2009

OFFICE OF PETITIONS

In re Application of :
Allasgarian :
Application No. 11/412,449 : DECISION ON PETITION
Filed: April1 27, 2006 :
Title: Unadorned Arched Window Cornering :

This is a decision on the petition under the unavoidable provisions of 37 CFR 1.137(a), filed April 24, 2009, to revive the above-identified application.

The petition under 37 CFR 1.137(a) is **DISMISSED.**

This above-identified application became abandoned for failure to timely file a complete reply to a Restriction Requirement mailed April 23, 2008. The Office Action set a one (1) month shortened statutory period for reply. No extensions of time were obtained under the provisions of 37 CFR 1.136(a). A Notice of Non-Compliant Amendment was mailed on August 1, 2008 Accordingly, this application became abandoned on May 23, 2008. A Notice of Abandonment was mailed on March 30, 2009.

A grantable petition under 37 CFR 1.137(a) must be accompanied by: (1) the required reply, unless previously filed; (2) the petition fee as set forth in 37 CFR 1.17(l); (3) a showing to the satisfaction of the Director that the entire delay in filing the required reply from the due date for the reply until the filing of a grantable petition pursuant to 37 CFR 1.137(a) was unavoidable; and (4) any terminal disclaimer (and fee as set forth in 37 CFR 1.20(d)) required pursuant to 37 CFR 1.137(d). The instant petition lacks item (3).

Petitioner argues that upon receipt of the Notice of Non Compliant Amendment, a reply was submitted on September 8, 2008. Petitioner states that he was able to confirm receipt of the reply via Canada Post web. Thus petitioner contends the application is not abandoned.

Petitioner's argument has been considered but it is not persuasive to establish unavoidable delay within the meaning of 37 CFR 1.137(a).

It is noted that when petitioner responded to the restriction requirement on May 28, 2008, the reply was untimely. The restriction requirement set an extendable reply period of May 23, 2008. The reply submitted on May 28, 2008 did not include a one-month extension of time or a general authorization to charge a deposit account for any deficient fees. The examiner further notified the applicant of the need to submit a one-month extension of time.

Petitioner has failed to provide evidence that an extension of time and fee were ever submitted as part of the reply.

Further, the copy of the reply, which was submitted with the petition, does not contain a certificate of mailing or certificate of transmission, pursuant to 37 CFR 1.8. Review of the record shows that neither a post card receipt within the meaning of MPEP 503[1] nor U.S. Express Mail Label[2] were supplied as evidence to establish the response was timely submitted. See 37 CFR 1.10 and MPEP 503. The Office recognizes mail sent via U.S. first class mail with the use of a certificate of mailing or a certificate of transmission for correspondence sent via facsimile and mail sent via express mail.

35 U.S.C. 21(a) provides that:

> The Director may by rule prescribe that any paper or fee required to be filed in the Patent and Trademark Office will be considered filed in the Office on the date on which it was

---

[1] The USPTO will stamp the receipt date on the postcard and place it in the outgoing mail. A postcard receipt which itemizes and properly identifies the items which are being filed serves as prima facie evidence of receipt in the USPTO of all the items listed thereon on the date stamped thereon by the USPTO.
The identifying data on the postcard should be so complete as to clearly identify the item for which a receipt is requested. For example, the postcard should identify the applicant's name, application number (if known), confirmation number (if known), filing date, interference number, title of the invention, etc. The postcard should also identify the type of paper being filed, e.g., new application, affidavit, amendment, notice of appeal, appeal brief, drawings, fees, motions, supplemental oath or declaration, petition, etc., and the number of pages being submitted. If a new application is being filed, all parts of the application being submitted should be separately listed on the postcard, e.g., the number of pages of specification (including written description, claims and abstract), number of claims, number of sheets of drawings, number of pages of oath/declaration, number of pages of cover sheet (provisional application).
The postcard receipt will not serve as prima facie evidence of receipt of any item which is not adequately itemized on the postcard. For example, merely listing on the postcard "a complete application" or "patent application" will not serve as a proper receipt for each of the required components of an application (e.g., specification (including claims), drawings (if necessary), oath or declaration and the application filing fee) or missing portions (e.g., pages, sheets of drawings) of an application if one of the components or portion of a component is found to be missing by the USPTO. Each separate component should be specifically and properly itemized on the postcard. Furthermore, merely incorporating by reference in the postcard receipt, the items listed in a transmittal letter will no serve as prima facie evidence of receipt of those items.

[2] Pursuant to 37 CFR 1.10:
(1) Any correspondence received by the U.S. Patent and Trademark Office (USPTO) that was delivered by the "Express Mail Post Office to Addressee" service of the United States Postal Service (USPS) will be considered filed with the USPTO on the date of deposit with the USPS.
(2) The date of deposit with USPS is shown by the "date in" on the "Express Mail" label or other official USPS notation. If the USPS deposit date cannot be determined, the correspondence will be accorded the USPTO receipt date as the filing date. See § 1.6(a).

deposited with the United States Postal Service or would have been deposited with the United States Postal Service but for postal service interruptions or emergencies designated by the Director.

The Director may, but is not required to, accept the mailing date as the filing date. The Director has determined that only the "U.S. Express Mail" procedure can be used for this purpose because the use of "U.S. Express Mail" provides very specific identifying information in advance which establishes both the date of mailing and the particular papers being filed.

An alternative method of delivery of mail was not provided for correspondence sent outside of the United States. So while the provisions of certificate of mailing and express mail were not available from Canada, the use of certificate of transmission, electronic filing and postcard receipt were viable options.

Ultimately provisions under 37 CFR 1.8, 1.10 and the use of a postcard receipt pursuant to MPEP 503 are the only mechanisms within which to establish the timely filing of correspondence in the USPTO. Applicant is unable to provide sufficient evidence to establish to the satisfaction of the Director that a timely reply to the Restriction Requirement was submitted.

Petitioner's failure to file the reply at issue in compliance with 37 CFR 1.8 or 1.10 precludes a finding that the delay was unavoidable. A "reasonably prudent person" would file papers or fees in compliance with 37 CFR 1.8 or 1.10 to ensure their timely filing in the USPTO, as well as preserve adequate evidence of such filing. Therefore, a delay caused by an applicant's failure to file papers or fees in compliance with 37 CFR 1.8 and 1.10 does not constitute "unavoidable" delay. *See* Krahn v. Commissioner, 15 USPQ2d 1823, 1825, (E.D. Va 1990); *see also* MPEP 711.03(c)(III)(C)(2).

In sum, petitioner has failed to provide sufficient evidence, to establish a finding of unavoidable delay.

The file does not indicate a change of address has been submitted, although the address given on the petition differs from the address of record. If appropriate, a change of address should be filed in accordance with MPEP 601.03. A courtesy copy of this decision is being mailed to the address given on the petition; however, the Office will mail all future correspondence solely to the address of record.

If petitioner cannot supply the evidence necessary, or simply does not wish to, petitioner should consider filing a petition under 37 CFR 1.137(b) stating that the delay was unintentional. Public Law 97-247, § 3, 96 Stat. 317 (1982), which revised patent and trademark fees, amended 35 U.S.C. § 41(a)(7) to provide for the revival of an "unintentionally" abandoned application without a showing that the delay in prosecution or in late payment of the issue fee was "unavoidable." This amendment to 35 U.S.C. § 41(a)(7) has been implemented in 37 CFR 1.137(b). An "unintentional" petition under 37 CFR 1.137(b) must be accompanied by the petition fee.

The filing of a petition under 37 CFR 1.137(b) cannot be intentionally delayed and therefore must be filed promptly. A person seeking revival due to unintentional delay cannot make a statement that the delay was unintentional unless the entire delay, including the date it was discovered that the application was abandoned until the filing of the petition to revive under 37 CFR 1.137(b), was unintentional. A statement that the delay was unintentional is not appropriate if petitioner intentionally delayed the filing of a petition for revival under 37 CFR 1.137(b).

Further correspondence with respect to this matter should be addressed as follows:

By Mail:
Mail Stop PETITION
Commissioner for Patents
P. O. Box 1450
Alexandria, VA 22313-1450

By hand:
U. S. Patent and Trademark Office
Customer Service Window, Mail Stop Petitions
Randolph Building
401 Dulany Street
Alexandria, VA 22314

By facsimile:
(571) 273-8300
Attn: Office of Petitions

Correspondence regarding this decision may also be filed through the electronic filing system of the USPTO.

Telephone inquiries concerning this decision should be directed to the undersigned at (571) 272-3215.

Charlema Grant
Petitions Attorney
Office of Petitions

Cc: Mahmoud Aliasgarian
4690 Jessica Way
Windsor, Ontario N9G 2S4
Canada

UNITED STATES PATENT AND TRADEMARK OFFICE

Commissioner for Patents
United States Patent and Trademark Office
P.O. Box 1450
Alexandria, VA 22313-1450
www.uspto.gov

Mahmoud Aliasgarian
4690 Jessica Way
Windsor ON N9G 2S4
CANADA

MAILED

MAR 22 2010

OFFICE OF PETITIONS

In re Application of :
Aliasgarian :
Application No. 11/412,449 : DECISION ON PETITION
Filed: April1 27, 2006 :
Title: Unadorned Arched Window Cornering :

This is a decision on the renewed petition under the unavoidable provisions of 37 CFR 1.137(a), filed July 6, 2009, to revive the above-identified application.

The petition under 37 CFR 1.137(a) is **DISMISSED.**

This above-identified application became abandoned for failure to timely file a complete reply to a Restriction Requirement mailed April 23, 2008. The Office Action set a one (1) month shortened statutory period for reply. No extensions of time were obtained under the provisions of 37 CFR 1.136(a). An untimely amendment was submitted May 28, 2008. A Notice of Non-Compliant Amendment was mailed on August 11, 2008 Accordingly, this application became abandoned on May 24, 2008. A Notice of Abandonment was mailed on March 30, 2009.

A grantable petition under 37 CFR 1.137(a) must be accompanied by: (1) the required reply, unless previously filed; (2) the petition fee as set forth in 37 CFR 1.17(l); (3) a showing to the satisfaction of the Director that the entire delay in filing the required reply from the due date for the reply until the filing of a grantable petition pursuant to 37 CFR 1.137(a) was unavoidable; and (4) any terminal disclaimer (and fee as set forth in 37 CFR 1.20(d)) required pursuant to 37 CFR 1.137(d). The instant petition lacks item (3).

Petitioner argues that upon receipt of the Notice of Non Compliant Amendment, a reply was submitted on September 8, 2008. Petitioner states that he was able to confirm receipt of the reply via Canadian Post web. Thus, petitioner contends the application is not abandoned.

Although, the Notice of Abandonment states that the application was held abandoned due to failure to reply to the Notice mailed on August 11, 2008, this application was abandoned based upon the failure to receive a timely response to the restriction requirement mailed on April 23, 2008. The restriction requirement provided applicant a shortened reply period of 1 month. This means that petitioner could have replied until May 23, 2008. Thereafter, applicant could have submitted a reply from with the appropriate extension of time fee. Since the reply submitted on May 28, 2008 was submitted outside of the one-month reply period, a one-month extension of

time was required. The Notice of Non Complaint Amendment informed applicant that there was a deficiency in his reply and also that a one month extension of time was required. Since the reply period expired without a proper reply and an extension of time was never provided the abandonment of this application occurred on May 24, 2008. The previous decision incorrectly stated the date of abandonment was May 23, 2008.

Petitioner further argues that setting a one-month shortened statutory period for reply to an Office action in an international application is neither logical nor comprehensible. However, the Office does not set reply periods based upon where applicants reside. The Office recognizes mail sent via U.S. first class mail with the use of a certificate of mailing or a certificate of transmission for correspondence sent via facsimile and mail sent via express mail.

35 U.S.C. 21(a) provides that:

> The Director may by rule prescribe that any paper or fee required to be filed in the Patent and Trademark Office will be considered filed in the Office on the date on which it was deposited with the United States Postal Service or would have been deposited with the United States Postal Service but for postal service interruptions or emergencies designated by the Director.

The Director has determined that only the "U.S. Express Mail" procedure can be used for this purpose because the use of "U.S. Express Mail" provides very specific identifying information in advance which establishes both the date of mailing and the particular papers being filed.

An alternative method of delivery of mail was not provided for correspondence sent outside of the United States. So while the provisions of certificate of mailing and express mail were not available from Canada, the use of certificate of transmission and postcard receipt were viable options.

Ultimately provisions under 37 CFR 1.8, 1.10 and the use of a postcard receipt pursuant to MPEP 503 are the only mechanisms within which to establish the timely filing of correspondence in the USPTO. Applicant is unable to provide sufficient evidence to establish to the satisfaction of the Director that a timely reply to the restriction requirement was submitted.

Petitioner's failure to file the reply at issue in compliance with 37 CFR 1.8 or 1.10 precludes a finding that the delay was unavoidable. A "reasonably prudent person" would file papers or fees in compliance with 37 CFR 1.8 or 1.10 to ensure their timely filing in the USPTO, as well as preserve adequate evidence of such filing. Therefore, a delay caused by an applicant's failure to file papers or fees in compliance with 37 CFR 1.8 and 1.10 does not constitute "unavoidable" delay. *See* Krahn v. Commissioner, 15 USPQ2d 1823, 1825, (E.D. Va 1990); *see also* MPEP 711.03(c)(III)(C)(2).

Further if applicant was aware that it usually takes ten days for the mail to cross the border it is not readily apparent why petitioner did not provide sufficient time to ensure that the reply would be timely received. While the usage of certificate of mailing pursuant to 37 CFR 1.8 via US Mail was not available to applicant, the use of the certificate of transmission pursuant to 37 CFR 1.8 was an available alternative, beyond submitting a one month extension of time.

Applicant states that he was not notified of the need to submit a one-month extension of time. However the restriction requirement informed applicant that extensions of time were available. Further, the Notice of Non Compliant Amendment clearly told applicant of the need to submit a one-month extension of time. A delay caused by an applicant's lack of knowledge or improper application of the patent statute, rules of practice or the MPEP is not rendered "unavoidable" due to: (A) the applicant's reliance upon oral advice from USPTO employees; or (B) the USPTO's failure to advise the applicant of any deficiency in sufficient time to permit the applicant to take corrective action. See In re Sivertz, 227 USPQ 255, 256 (Comm'r Pat. 1985).

Further, the reply does not contain a certificate of mailing or certificate of transmission, pursuant to 37 CFR 1.8. Review of the record shows that neither a post card receipt within the meaning of MPEP 503[1] nor U.S. Express Mail Label[2] were supplied as evidence to establish the response was timely submitted. See 37

---

[1] The USPTO will stamp the receipt date on the postcard and place it in the outgoing mail. A postcard receipt which itemizes and properly identifies the items which are being filed serves as prima facie evidence of receipt in the USPTO of all the items listed thereon on the date stamped thereon by the USPTO.
The identifying data on the postcard should be so complete as to clearly identify the item for which a receipt is requested. For example, the postcard should identify the applicant's name, application number (if known), confirmation number (if known), filing date, interference number, title of the invention, etc. The postcard should also identify the type of paper being filed, e.g., new application, affidavit, amendment, notice of appeal, appeal brief, drawings, fees, motions, supplemental oath or declaration, petition, etc., and the number of pages being submitted. If a new application is being filed, all parts of the application being submitted should be separately listed on the postcard, e.g., the number of pages of specification (including written description, claims and abstract), number of claims, number of sheets of drawings, number of pages of oath/declaration, number of pages of cover sheet (provisional application).
The postcard receipt will not serve as prima facie evidence of receipt of any item which is not adequately itemized on the postcard. For example, merely listing on the postcard "a complete application" or "patent application" will not serve as a proper receipt for each of the required components of an application (e.g., specification (including claims), drawings (if necessary), oath or declaration and the application filing fee) or missing portions (e.g., pages, sheets of drawings) of an application if one of the components or portion of a component is found to be missing by the USPTO. Each separate component should be specifically and properly itemized on the postcard. Furthermore, merely incorporating by reference in the postcard receipt, the items listed in a transmittal letter will no serve as prima facie evidence of receipt of those items.

[2] Pursuant to 37 CFR 1.10:
(1) Any correspondence received by the U.S. Patent and Trademark Office (USPTO) that was delivered by the "Express Mail Post Office to Addressee" service of the United States Postal Service (USPS) will be considered filed with the USPTO on the date of deposit with the USPS.
(2) The date of deposit with USPS is shown by the "date in" on the "Express Mail" label or other official USPS notation. If the USPS deposit date cannot be determined, the correspondence will be accorded the USPTO receipt date as

In sum, petitioner has failed to provide sufficient evidence, to establish a finding of unavoidable delay.

If petitioner cannot supply the evidence necessary, or simply does not wish to, petitioner should consider filing a petition under 37 CFR 1.137(b) stating that the delay was unintentional. Public Law 97-247, § 3, 96 Stat. 317 (1982), which revised patent and trademark fees, amended 35 U.S.C. § 41(a)(7) to provide for the revival of an "unintentionally" abandoned application without a showing that the delay in prosecution or in late payment of the issue fee was "unavoidable." This amendment to 35 U.S.C. § 41(a)(7) has been implemented in 37 CFR 1.137(b). An "unintentional" petition under 37 CFR 1.137(b) must be accompanied by the petition fee.

The filing of a petition under 37 CFR 1.137(b) cannot be intentionally delayed and therefore must be filed promptly. A person seeking revival due to unintentional delay cannot make a statement that the delay was unintentional unless the entire delay, including the date it was discovered that the application was abandoned until the filing of the petition to revive under 37 CFR 1.137(b), was unintentional. A statement that the delay was unintentional is not appropriate if petitioner intentionally delayed the filing of a petition for revival under 37 CFR 1.137(b).

Further correspondence with respect to this matter should be addressed as follows:

By Mail:
Mail Stop PETITION
Commissioner for Patents
P. O. Box 1450
Alexandria, VA 22313-1450

By hand:
U. S. Patent and Trademark Office
Customer Service Window, Mail Stop Petitions
Randolph Building
401 Dulany Street
Alexandria, VA 22314

By facsimile:
(571) 273-8300
Attn: Office of Petitions

Correspondence regarding this decision may also be filed through the electronic filing system of the USPTO.

---

the filing date. See § 1.6(a).

Telephone inquiries concerning this decision should be directed to the undersigned at (571) 272-3215.

Charlema Grant
Petitions Attorney
Office of Petitions

UNITED STATES PATENT AND TRADEMARK OFFICE

UNITED STATES DEPARTMENT OF COMMERCE
United States Patent and Trademark Office
Address: COMMISSIONER FOR PATENTS
P.O. Box 1450
Alexandria, Virginia 22313-1450
www.uspto.gov

APPL NO.	FILING OR 371 (c) DATE	ART UNIT	FIL FEE REC'D	ATTY.DOCKET NO	DRAWINGS	TOT CLMS	IND CLMS
11/412,459	04/27/2006	3672	1750	2002-IP-006839U1D1 USA (1	7	35	3

CONFIRMATION NO. 9026

30652
CONLEY ROSE, P.C.
5700 GRANITE PARKWAY, SUITE 330
PLANO, TX 75024

CORRECTED FILING RECEIPT

OC000000020395062

Date Mailed: 09/12/2006

Receipt is acknowledged of this regular Patent Application. It will be considered in its order and you will be notified as to the results of the examination. Be sure to provide the U.S. APPLICATION NUMBER, FILING DATE, NAME OF APPLICANT, and TITLE OF INVENTION when inquiring about this application. Fees transmitted by check or draft are subject to collection. Please verify the accuracy of the data presented on this receipt. **If an error is noted on this Filing Receipt, please mail to the Commissioner for Patents P.O. Box 1450 Alexandria Va 22313-1450. Please provide a copy of this Filing Receipt with the changes noted thereon. If you received a "Notice to File Missing Parts" for this application, please submit any corrections to this Filing Receipt with your reply to the Notice. When the USPTO processes the reply to the Notice, the USPTO will generate another Filing Receipt incorporating the requested corrections (if appropriate).**

Applicant(s)

Harry D. Smith JR., Houston, TX;

Assignment For Published Patent Application

Halliburton Energy Services, Inc., Houston, TX

Power of Attorney: None

Domestic Priority data as claimed by applicant

This application is a DIV of 10/457,645 06/09/2003 PAT 7,086,484

Foreign Applications

If Required, Foreign Filing License Granted: 05/18/2006

The country code and number of your priority application, to be used for filing abroad under the Paris Convention, is US11/412,459

Projected Publication Date: Not Applicable

Non-Publication Request: No

Early Publication Request: No

Title

Assembly and method for determining thermal properties of a formation and forming a liner

Preliminary Class

166

PROTECTING YOUR INVENTION OUTSIDE THE UNITED STATES

Since the rights granted by a U.S. patent extend only throughout the territory of the United States and have no effect in a foreign country, an inventor who wishes patent protection in another country must apply for a patent in a specific country or in regional patent offices. Applicants may wish to consider the filing of an international application under the Patent Cooperation Treaty (PCT). An international (PCT) application generally has the same effect as a regular national patent application in each PCT-member country. The PCT process **simplifies** the filing of patent applications on the same invention in member countries, but **does not result** in a grant of "an international patent" and does not eliminate the need of applicants to file additional documents and fees in countries where patent protection is desired.

Almost every country has its own patent law, and a person desiring a patent in a particular country must make an application for patent in that country in accordance with its particular laws. Since the laws of many countries differ in various respects from the patent law of the United States, applicants are advised to seek guidance from specific foreign countries to ensure that patent rights are not lost prematurely.

Applicants also are advised that in the case of inventions made in the United States, the Director of the USPTO must issue a license before applicants can apply for a patent in a foreign country. The filing of a U.S. patent application serves as a request for a foreign filing license. The application's filing receipt contains further information and guidance as to the status of applicant's license for foreign filing.

Applicants may wish to consult the USPTO booklet, "General Information Concerning Patents" (specifically, the section entitled "Treaties and Foreign Patents") for more information on timeframes and deadlines for filing foreign patent applications. The guide is available either by contacting the USPTO Contact Center at 800-786-9199, or it can be viewed on the USPTO website at http://www.uspto.gov/web/offices/pac/doc/general/index.html.

For information on preventing theft of your intellectual property (patents, trademarks and copyrights), you may wish to consult the U.S. Government website, http://www.stopfakes.gov. Part of a Department of Commerce initiative, this website includes self-help "toolkits" giving innovators guidance on how to protect intellectual property in specific countries such as China, Korea and Mexico. For questions regarding patent enforcement issues, applicants may call the U.S. Government hotline at 1-866-999-HALT (1-866-999-4158).

LICENSE FOR FOREIGN FILING UNDER
Title 35, United States Code, Section 184
Title 37, Code of Federal Regulations, 5.11 & 5.15

GRANTED

The applicant has been granted a license under 35 U.S.C. 184, if the phrase "IF REQUIRED, FOREIGN FILING LICENSE GRANTED" followed by a date appears on this form. Such licenses are issued in all applications where the conditions for issuance of a license have been met, regardless of whether or not a license may be required as set forth in 37 CFR 5.15. The scope and limitations of this license are set forth in 37 CFR 5.15(a) unless an earlier license has been issued under 37 CFR 5.15(b). The license is subject to revocation upon written notification. The date indicated is the effective date of the license, unless an earlier license of similar scope has been granted under 37 CFR 5.13 or 5.14.

This license is to be retained by the licensee and may be used at any time on or after the effective date thereof unless it is revoked. This license is automatically transferred to any related applications(s) filed under 37 CFR

1.53(d). This license is not retroactive.

The grant of a license does not in any way lessen the responsibility of a licensee for the security of the subject matter as imposed by any Government contract or the provisions of existing laws relating to espionage and the national security or the export of technical data. Licensees should apprise themselves of current regulations especially with respect to certain countries, of other agencies, particularly the Office of Defense Trade Controls, Department of State (with respect to Arms, Munitions and Implements of War (22 CFR 121-128)); the Bureau of Industry and Security, Department of Commerce (15 CFR parts 730-774); the Office of Foreign Assets Control, Department of Treasury (31 CFR Parts 500+) and the Department of Energy.

NOT GRANTED

No license under 35 U.S.C. 184 has been granted at this time, if the phrase "IF REQUIRED, FOREIGN FILING LICENSE GRANTED" DOES NOT appear on this form. Applicant may still petition for a license under 37 CFR 5.12, if a license is desired before the expiration of 6 months from the filing date of the application. If 6 months has lapsed from the filing date of this application and the licensee has not received any indication of a secrecy order under 35 U.S.C. 181, the licensee may foreign file the application pursuant to 37 CFR 5.15(b).

UNITED STATES PATENT AND TRADEMARK OFFICE

COMMISSIONER FOR PATENTS
UNITED STATES PATENT AND TRADEMARK OFFICE
P.O. BOX 1450
ALEXANDRIA, VA 22313-1450
www.uspto.gov
DIW Nov-06

AGILENT TECHNOLOGIES INC.
INTELLECTUAL PROPERTY ADMINISTRATION
M/S DU404
P.O. BOX 7599
LOVELAND CO 80537-0599

COPY MAILED
NOV 0 8 2006
OFFICE OF PETITIONS

In re Application of :
Kangru et al. :
Application No. 11/412,477 : DECISION DISMISSING PETITION
Filed: 26 April, 2006 :
Attorney Docket No. 10041660-1 :

This is a decision on the petition filed on 21 August, 2006, which is treated as a petition requesting that the application, including one (1) sheet of drawings containing Figure 5, be accorded a filing date of 26 April, 2006.

The petition is **DISMISSED**.

On 26 April, 2006, the application was filed. On 18 May, 2006, however, Initial Patent Examination Division mailed a "Notice to File Missing Parts in a Nonprovisional Application" stating that, *inter alia*, the application had been accorded a filing date of 26 April, 2006, but that Figure 5 described in the specification appeared to have been omitted from the application.

In response, on 21 August, 2006, the present petition was filed, accompanied by one (1) sheet of drawings containing Figure 5. Petitioners argue that one (1) sheet of drawings containing Figure 5 was filed with the other application papers deposited in the USPTO on 26 April, 2006. In support, petitioners supplied on 21 August, 2006, a copy of a postcard receipt bearing a USPTO Office date stamp of 26 April, 2006, and the above-identified application number and itemizing the filing of, *inter alia*, five (5) sheets of drawings and Figures 1a, 1b, and Figures 2-5.

A review of the record reveals that five (5) sheets of drawings containing Figures 1a, 1b, 2, 3, and 4 are located in the application file. No sheets of drawings containing Figure 5, however, are located among the application papers deposited on 26 April, 2006.

Where the records of the Office (e.g. the file of the application) contain any document(s) or fee(s) corresponding to

the contents of the correspondence at issue, the Office will rely upon its official record of the contents of such correspondence in the absence of convincing evidence (e.g. a postcard receipt under MPEP 503 containing specific itemization of the document(s) or fee(s) purported to have been filed with the correspondence at issue) that the Office received and misplaced any document(s) or fee(s) that is not among the official records of the Office. If a new application is being filed, all parts of the application being submitted should be separately listed on the postcard (e.g. the number of pages of specification (including written description, claims and abstract) number of claims, number of sheets of drawings, number of pages of oath/declaration. The postcard receipt will not serve as *prima facie* evidence of receipt of any item which is not adequately itemized on the postcard.[1]

Petitioners' argument has been considered, but is not persuasive. The showing of record is that five (5) sheets of drawings containing Figures 1a, 1b, 2, 3, and 4 were received in the Office on 26 April, 2006, and petitioner's postcard receipt reflects that the Office received five (5) sheets of drawings with the application papers filed on that date. Figure 5, however, was not included in the five (5) sheets of drawings present on filing. As such, the postcard does not serve as *prima facie* evidence that a sheet of drawings containing Figure 5 was present on filing. A postcard receipt will not serve as prima facie evidence of receipt in the USPTO of any items which are not properly itemized and identified.

Petitioners must explain, in any renewed petition, if one (1) sheet of drawings containing Figure 5 was included among the five (5) sheets of drawings received in the Office on 26 April, 2006. Petitioners must also explain the discrepancy between the drawing sheets and figures actually received in the Official file and the drawing sheets and figures listed on the itemized postcard.

As the showing of record is that the postcard was not properly itemized, the petition must be dismissed.

With regard to petitioners' contention that Figure 5 does not contain new matter, petitioners may wish to consider submitting Figure 5 as a preliminary amendment. If Figure 5 was submitted with a preliminary amendment, it will be reviewed by the examiner for new matter.

---

[1] MPEP 503.

As the showing of record is that the petition was necessitated by an error on the part of petitioners, counsel's deposit account will be charged the petition fee of $400.00, as authorized in the petition.

Further correspondence with respect to this matter should be addressed as follows:

By mail: Mail Stop Petition
Commissioner for Patents
P.O. Box 1450
Alexandria, VA 22313-1450

By FAX: (571) 273-8300
Attn: Office of Petitions

By hand: Customer Service Window
Mail Stop Petition
Randolph Building
401 Dulany Street
Alexandria, VA 22314

The application will be referred to the Office of Initial Patent Examination for further processing with a filing date of 26 April, 2006, using only the application papers present on filing.

Telephone inquiries related to this decision should be directed to the undersigned at 571-272-3231.

D Wood

Douglas I. Wood
Senior Petitions Attorney
Office of Petitions

UNITED STATES PATENT AND TRADEMARK OFFICE

UNITED STATES DEPARTMENT OF COMMERCE
United States Patent and Trademark Office
Address: COMMISSIONER FOR PATENTS
P.O. Box 1450
Alexandria, Virginia 22313-1450
www.uspto.gov

SCHWABE, WILLIAMSON & WYATT, P.C.
PACWEST CENTER, SUITE 1900
1211 S.W. FIFTH AVE.
PORTLAND, OR 97204

Mail Date: 04/21/2010

Applicant	: Shlomo Ovadia	: DECISION ON REQUEST FOR
Patent Number	: 7653392	: RECALCULATION of PATENT
Issue Date	: 01/26/2010	: TERM ADJUSTMENT IN VIEW
Appliction No	: 11/412,479	: OF WYETH AND NOTICE OF INTENT TO
Filed	: 04/26/2006	: ISSUE CERTIFICATE OF CORRECTION
		:

The Request for Recalculation is **GRANTED** to the extent indicated.

The patent term adjustment has been determined to be **919** days. The USPTO will *sua sponte* issue a certificate of correction reflecting the amount of PTA days determined by the recalculation.

Prior to the issuance of the certificate of correction, the USPTO will afford patentee an opportunity to be heard and request reconsideration. Accordingly, patentee has **one month or thirty (30) days**, whichever is longer, to file a request for reconsideration of this patent term adjustment calculation. See 35 U.S.C. 154(b)(3)(B)(ii) and 37 CFR 1.322(a)(4). No extensions of time will be granted under 37 CFR 1.136.

Patentee should use document code PET.OP if electronically filing a request for reconsideration of this patent term adjustment calculation. The patentee must also include the information required by 37 CFR 1.705(b)(2) and the fee required by 37 CFR 1.18(e). If patentee does not file a timely request for reconsideration of this patent term adjustment calculation including the information required by 37 CFR 1.705(b)(2) and the fee required by 37 CFR 1.18(e), the USPTO will issue a certificate of correction reflecting the PTA determination noted above.

Patentee should be aware that in order to preserve the right to review in the United States District Court for the District of Columbia of the USPTO patent term adjustment determination, patentee must ensure that he or she also take the steps required under 35 U.S.C. 154(b)(4)(A) in a timely manner. Nothing in the request for recalculation should be construed as providing an alternative time frame for commencing a civil action under 35 U.S.C. 154(b)(4)(A).

Any questions concerning this decision should be directed to the Office of Patent Legal Administration at 571-272-7702.

UNITED STATES PATENT AND TRADEMARK OFFICE

UNITED STATES DEPARTMENT OF COMMERCE
United States Patent and Trademark Office
Address: COMMISSIONER FOR PATENTS
P.O. Box 1450
Alexandria, Virginia 22313-1450
www.uspto.gov

Jones Day (RIM) - 2N
North Point
901 Lakeside Avenue
Cleveland, OH 44114

Mail Date: 04/20/2010

Applicant	: Phat H. Tran	: DECISION ON REQUEST FOR
Patent Number	: 7630342	: RECALCULATION of PATENT
Issue Date	: 12/08/2009	: TERM ADJUSTMENT IN VIEW
Appliction No	: 11/412,494	: OF WYETH AND NOTICE OF INTENT TO
Filed	: 04/27/2006	: ISSUE CERTIFICATE OF CORRECTION
		:

The Request for Recalculation is **GRANTED** to the extent indicated.

The patent term adjustment has been determined to be **615** days. The USPTO will *sua sponte* issue a certificate of correction reflecting the amount of PTA days determined by the recalculation.

Prior to the issuance of the certificate of correction, the USPTO will afford patentee an opportunity to be heard and request reconsideration. Accordingly, patentee has **one month or thirty (30) days**, whichever is longer, to file a request for reconsideration of this patent term adjustment calculation. See 35 U.S.C. 154(b)(3)(B)(ii) and 37 CFR 1.322(a)(4). No extensions of time will be granted under 37 CFR 1.136.

Patentee should use document code PET.OP if electronically filing a request for reconsideration of this patent term adjustment calculation. The patentee must also include the information required by 37 CFR 1.705(b)(2) and the fee required by 37 CFR 1.18(e). If patentee does not file a timely request for reconsideration of this patent term adjustment calculation including the information required by 37 CFR 1.705(b)(2) and the fee required by 37 CFR 1.18(e), the USPTO will issue a certificate of correction reflecting the PTA determination noted above.

Patentee should be aware that in order to preserve the right to review in the United States District Court for the District of Columbia of the USPTO patent term adjustment determination, patentee must ensure that he or she also take the steps required under 35 U.S.C. 154(b)(4)(A) in a timely manner. Nothing in the request for recalculation should be construed as providing an alternative time frame for commencing a civil action under 35 U.S.C. 154(b)(4)(A).

Any questions concerning this decision should be directed to the Office of Patent Legal Administration at 571-272-7702.

UNITED STATES PATENT AND TRADEMARK OFFICE

Commissioner for Patents
United States Patent and Trademark Office
P.O. Box 1450
Alexandria, VA 22313-1450
www.uspto.gov

MERONI & MERONI, PC
P.O. BOX 309
BARRINGTON, IL 60011

COPY MAILED

JUL 23 2008

OFFICE OF PETITIONS

In re Application of :
Michael A. MALPIER, et al :
Application No. 11/412,498 : DECISION ON PETITION
Filed: April 27, 2006 : TO MAKE SPECIAL UNDER
Attorney Docket No. 05275 : 37 CFR 1.102(c)(1)
:

This is a decision on the petition under 37 CFR 1.102(c)(1), filed June 16, 2008, to make the above-identified application special based on applicant's age as set forth in M.P.E.P. § 708.02, Section IV.

The petition is **GRANTED**.

A grantable petition to make an application special under 37 CFR 1.102(c)(1) and MPEP § 708.02, Section IV: Applicant's Age must be accompanied by evidence showing that at least one of the applicants is 65 years of age, or more, such as a birth certificate or a statement by applicant. No fee is required

The instant petition includes a photocopy of Applicant Michael A. Malpier driver's license. Accordingly, the above-identified application has been accorded "special" status.

Telephone inquiries concerning this decision should be directed to the undersigned at 571-272-6735.

All other inquiries concerning either the examination or status of the application should be directed to the Technology Center.

The application is being returned to Technology Center Art Unit 3681 for action on the merits commensurate with this decision.

Diane Goodwyn
Petitions Examiner
Office of Petitions

UNITED STATES PATENT AND TRADEMARK OFFICE

Commissioner for Patents
United States Patent and Trademark Office
P.O. Box 1450
Alexandria, VA 22313-1450
www.uspto.gov

MCDONALD HOPKINS LLC
600 SUPERIOR AVENUE, EAST
SUITE 2100
CLEVELAND OH 44114-2653

MAILED

JUL 07 2010

OFFICE OF PETITIONS

In re Application of :
Cortright, et al. :
Application No. 11/412,520 : DECISION
Filed: 27 April, 2006 :
Attorney Docket No: 25433-00114 :

This is a decision on the petition filed on 29 January, 2010, pursuant to 37 C.F.R. §1.137(b) for revival of an application abandoned due to unintentional delay.

The petition under 37 C.F.R. §1.137(b) is **GRANTED**.

As to the Allegations
of Unintentional Delay

The requirements of a grantable petition pursuant to 37 C.F.R. §1.137(b) are the petition and fee therefor, a reply, a proper statement of unintentional delay under the regulation, and, where applicable, a terminal disclaimer and fee.

Petitioners attentions always are directed to the guidance in the Commentary at MPEP §711.03(c).

BACKGROUND

The record reflects as follows:

The Applicant failed to reply timely and properly to the final Office action mailed on 1 April, 2009, with reply due absent extension of time on or before 1 July, 2009.

The application went abandoned by operation of law after midnight 1 July, 2009.

On 1 October, 2009, Petitioner filed, *inter alia*, a request and fee for extension of time, an amendment after final, which the Examiner refused to enter and Petitioner—as one registered to

practice before the Office—knew was not as of right and not a proper reply[1] if it did not *prima facie* place the application in condition for allowance, and on 27 October, 2009, the Examiner mailed an Advisory Action.

The application went abandoned by operation of law after midnight 1 October, 2009.

It does not appear that the Office mailed the Notice of Abandonment before a petition was filed.

On 29 January, 2010, Petitioner filed, *inter alia*, a petition pursuant to 37 C.F.R. §1.137(b), with fee, with a statement of unintentional delay and a reply in the form of a request for continued examination (RCE) and fee and a submission under the provisions of 37 C.F.R. §1.114 in the form of an amendment

The Office mailed the Notice of Abandonment on 1 February, 2010.

The availability of applications and application papers online to applicants/practitioners who diligently associate their Customer Number with the respective application(s) now provides an applicant/practitioner on-demand information as to events/transactions in an application.

Out of an abundance of caution, Petitioners always are reminded that those registered to practice and all others who make representations before the Office **must** inquire into the underlying facts of representations made to the Office and support averments with the appropriate documentation–since all owe to the Office the continuing duty to disclose.[2]

STATUTES, REGULATIONS AND ANALYSIS

Congress has authorized the Commissioner to "revive an application if the delay is shown to the satisfaction of the Commissioner to have been "unavoidable." 35 U.S.C. §133 (1994).[3]
The regulations at 37 C.F.R. §1.137(a) and (b) set forth the requirements for a Petitioner to revive a previously unavoidably or unintentionally, respectively, abandoned application under this congressional grant of authority.

---

[1] A proper reply is an amendment *prima facie* placing the application in condition for allowance, a Notice of Appeal, or an RCE (with fee and submission under 37 C.F.R. §1.114). (See: MPEP §711.03(c).)

[2] See supplement of 17 June, 1999. The Patent and Trademark Office is relying on petitioner's duty of candor and good faith and accepting a statement made by Petitioner. See Changes to Patent Practice and Procedure, 62 Fed. Reg. at 53160 and 53178, 1203 Off. Gaz. Pat. Office at 88 and 103 (responses to comments 64 and 109)(applicant obligated under 37 C.F.R. §10.18 to inquire into the underlying facts and circumstances when providing statements to the Patent and Trademark Office).

[3] 35 U.S.C. §133 provides:

35 U.S.C. §133 Time for prosecuting application.
Upon failure of the applicant to prosecute the application within six months after any action therein, of which notice has been given or mailed to the applicant, or within such shorter time, not less than thirty days, as fixed by the Commissioner in such action, the application shall be regarded as abandoned by the parties thereto, unless it be shown to the satisfaction of the Commissioner that such delay was unavoidable.

Unintentional delays are those that do not satisfy the very strict statutory and regulatory requirements of unavoidable delay, and also, by definition, are not intentional.[4]))

As to Allegations of
Unintentional Delay

The requirements of a grantable petition pursuant to 37 C.F.R. §1.137(b) are the petition and fee therefor, a reply, a proper statement of unintentional delay under the regulation, and, where applicable, a terminal disclaimer and fee.

It appears that the requirements under the rule have been satisfied.

CONCLUSION

Accordingly, the petition pursuant to 37 C.F.R. §1.137(b) is **granted**.

The instant application is released to the Technology Center/AU 3657 for further processing in due course.

Petitioner may find it beneficial to view Private PAIR within a fortnight of the instant decision to ensure that the revival has been acknowledged by the TC/AU in response to this decision. It is noted that all inquiries with regard to that change in status need be directed to the TC/AU where that change of status must be effected—that does not occur in the Office of Petitions.

[4] Therefore, by example, an unintentional delay in the reply might occur if the reply and transmittal form are to be prepared for shipment by the US Postal Service, but other pressing matters distract one's attention and the mail is not timely deposited for shipment.

Telephone inquiries regarding this decision may be directed to the undersigned at (571) 272-3214—it is noted, however, that all practice before the Office is in writing (see: 37 C.F.R. §1.2[5]) and the proper authority for action on any matter in this regard are the statutes (35 U.S.C.), regulations (37 C.F.R.) and the commentary on policy (MPEP). Therefore, no telephone discussion may be controlling or considered authority for Petitioner's action(s).

/John J. Gillon, Jr./
John J. Gillon, Jr.
Senior Attorney
Office of Petitions

---

[5] The regulations at 37 C.F.R. §1.2 provide:

§1.2 Business to be transacted in writing.

All business with the Patent and Trademark Office should be transacted in writing. The personal attendance of applicants or their attorneys or agents at the Patent and Trademark Office is unnecessary. The action of the Patent and Trademark Office will be based exclusively on the written record in the Office. No attention will be paid to any alleged oral promise, stipulation, or understanding in relation to which there is disagreement or doubt.

UNITED STATES PATENT AND TRADEMARK OFFICE

Commissioner for Patents
United States Patent and Trademark Office
P.O. Box 1450
Alexandria, VA 22313-1450
www.uspto.gov

THE WEBB LAW FIRM, P.C.
700 KOPPERS BUILDING
436 SEVENTH AVENUE
PITTSBURGH PA 15219

MAILED

JAN 22 2009

OFFICE OF PETITIONS

In re Patent No. 7,282,656 :
Issue Date: October 16, 2007 :
Application No. 11/412,537 : DECISION ON PETITION
Filed: April 27, 2006 :
Attorney Docket No. 0388-061268 :

This is a decision on the petition under 37 CFR 1.182, filed August 8, 2008, requesting issuance of a duplicate Letters Patent for the above-identified patent.

The petition is **GRANTED**.

The Office of Data Management is directed to issue a duplicate Letters Patent.

As authorized, the $400 fee for the petition under 37 CFR 1.182 has been assessed to petitioner's deposit account.

Telephone inquiries concerning this decision may be directed to JoAnne Burke at (571) 272-4584. Inquiries regarding the issuance of a duplicate Letters Patent may be directed to Naomi Farmer in the Office of Data Management at (703) 308-9250, Ext. 129.

A copy of this decision is being faxed to Office of Data Management for issuance of a duplicate Letters Patent.

Ramesh Krishnamurthy
Petitions Examiner
Office of Petitions

cc: Naomi Farmer, South Tower, 8th Floor, Room C23 (Fax No. (571) 270-9753)

UNITED STATES PATENT AND TRADEMARK OFFICE

Commissioner for Patents
United States Patent and Trademark Office
P.O. Box 1450
Alexandria, VA 22313-1450
www.uspto.gov

THE LAW OFFICES OF DENNIS L. COOK, PLLC
10004 MARATHON COURT
TAMPA FL 33615

COPY MAILED

SEP 30 2008

OFFICE OF PETITIONS

In re Application of :
Schoenberg : DECISION ON PETITION
Application No. 11/412,551 :
Filed: April 27, 2006 :
Atty. Dkt. No.: DCP0019-01UT :

This is a decision on the petition under 37 CFR 1.137(a), filed September 11, 2008, to revive the above-identified application.

The petition is DISMISSED.

Any request for reconsideration of this decision must be submitted within TWO (2) MONTHS from mail date of this decision. Extensions of time under 37 CFR 1.136(a) are permitted. The reconsideration request should include a cover letter entitled "Renewed Petition under 37 CFR 1.137(a)." This is not a final agency decision.

This application became abandoned April 19, 2008 for failure to timely submit the issue fee in response to the non-final Office action mailed January 18, 2008. The non-final Office action set a three month statutory period of time for reply. No petition for extension of time was submitted. Notice of Abandonment was mailed August 5, 2008.

A grantable petition under 37 CFR 1.137(a) must be accompanied by: (1) the required reply, unless previously filed; (2) the petition fee as set forth in 37 CFR 1.17(l); (3) a showing to the satisfaction of the Director that the entire delay in filing the required reply from the due date for the reply until the filing of a grantable petition pursuant to 37 CFR 1.137(a) was unavoidable; and (4) any terminal disclaimer (and fee as set forth in 37 CFR 1.20(d)) required pursuant to 37 CFR 1.137(c).

The petition lacks requirement (3) set forth above. Petitioner has failed to present a showing to the satisfaction of the Director that the entire delay in filing the required reply from the due date for the reply until the filing of a grantable petition pursuant to 37 CFR 1.137(a) was unavoidable.

The Office may revive an abandoned application if the delay in responding to the relevant outstanding Office requirement is shown to the satisfaction of the Director to have been "unavoidable." See, 37 CFR 1.137(a)(3). Decisions on reviving abandoned applications have adopted the reasonably prudent person standard in determining if the delay was unavoidable. Ex parte Pratt, 1887 Dec. Comm'r Pat. 31, 32-33 (Comm'r Pat. 1887)(the term "unavoidable" "is applicable to ordinary human affairs, and requires no more or greater care or diligence than is generally used and observed by prudent and careful men in relation to their most important

business"); In re Mattullath, 38 App. D.C. 497, 514-15 (D.C. Cir. 1912); Ex parte Henrich, 1913 Dec. Comm'r Pat. 139, 141 (Comm'r Pat. 1913). In addition, decisions on revival are made on a "case-by-case basis, taking all the facts and circumstances into account." Smith v. Mossinghoff, 671 F.2d 533, 538, 213 USPQ 977, 982 (D.C. Cir. 1982). A petition to revive an application as unavoidably abandoned cannot be granted where petitioner has failed to meet his or her burden of establishing the cause of the unavoidable delay. Haines v. Quigg, 673 F. Supp. 314, 5 USPQ2d 1130 (N.D. Ind. 1987).

Petitioner alleges that on multiple occasions, the examiner of record advised applicant to ignore the non-final Office action because it would be withdrawn and a new Office action would be mailed.

Petitioner further states that "applicant was merely following the express and off repeated instructions of the Examiner on this application and the Abandonment of the application was unavoidable based on the advisement given to do nothing and the failure of the Examiner to do what he repeatedly said he was going to do."

The instant petition has been carefully reviewed, but is not found convincing. In accordance with MPEP 711.03(c), "delay caused by an applicant's lack of knowledge or improper application of the patent statute, rules of practice or the MPEP is not rendered "unavoidable" due to: (A) *the applicant's reliance upon oral advice from USPTO employees*; or (B) the USPTO's failure to advise the applicant of any deficiency in sufficient time to permit the applicant to take corrective action. See, In re Sivertz, 227 USPQ 255, 256 (Comm'r Pat. 1985)." (Emphasis added.)

As petitioner seems to attribute the delay in timely responding the non-final Office action to oral advice from the examiner of record, the delay is not found to be unavoidable within the meaning of 37 CFR 1.137(a).

Any renewed petition must be accompanied by evidence to sufficiently establish that the entire period of delay in responding to the non-final Office action was unavoidable.

ALTERNATE VENUE

Petitioner may wish to consider filing a petition stating that the entire delay was unintentional. Petitioner's attention is directed to 37 CFR 1.137(b) which provides for the revival of an "unintentionally" abandoned application without a showing that the delay in prosecution or in late payment of an issue fee was "unavoidable". An "unintentional" petition under 37 CFR 1.137(b) must be accompanied by the required petition fee and reply.

The filing of a petition under 37 CFR 1.137(b) cannot be intentionally delayed and therefore must be filed promptly. A person seeking revival due to unintentional delay cannot make a statement that the delay was unintentional unless the entire delay, including the delay from the date it was discovered that the application was abandoned until the filing of the petition to revive under 37 CFR 1.137(b), was unintentional. A statement that the delay was unintentional is not appropriate if petitioner intentionally delayed the filing of a petition for revival under 37 CFR

1.137(b). The Director may require additional information where there is a question whether the delay was unintentional.

Further correspondence with respect to this matter should be addressed as follows:

By mail:	Mail Stop Petition Commissioner for Patents P.O. Box 1450 Alexandria, VA 22313-1450
By facsimile:	(571) 273-8300
By hand:	U.S. Patent and Trademark Office Customer Window Mail Stop Petition Randolph Building Dulany Street Alexandria, VA 22314

Telephone inquiries concerning this matter may be directed to the undersigned at (571) 272-3205.

Alesia M. Brown
Petitions Attorney
Office of Petitions

UNITED STATES PATENT AND TRADEMARK OFFICE

COMMISSIONER FOR PATENTS
UNITED STATES PATENT AND TRADEMARK OFFICE
P.O. BOX 1450
ALEXANDRIA, VA 22313-1450
www.uspto.gov

THE LAW OFFICES OF DENNIS L. COOK, PLLC
10004 MARATHON COURT
TAMPA FL 33615

COPY MAILED

NOV 12 2008

In re Application of :
Schoenberg :
Application No. 11/412,551 : DECISION ON PETITION
Filed: April 27, 2006 :
Attorney Docket No. DCP0019-01UT :

This is a decision on the petition under the unintentional provisions of 37 CFR 1.137(b), filed October 14, 2008, to revive the above-identified application.

The petition is GRANTED.

The application became abandoned April 19, 2008 for failure to reply in a timely manner to the non-final Office action mailed January 18, 2008. The non-final Office action set a three month shortened statutory period of time for reply. No extensions of time under the provisions of 37 CFR 1.136(a) were obtained. Notice of Abandonment was mailed August 5, 2008

The petition satisfies the requirements of 37 CFR 1.137(b) in that petitioner has supplied (1) the required reply, (2) the required petition fee, and (3) a proper statement of unintentional delay.

Telephone inquiries concerning this decision should be directed to the undersigned at (571) 272-3205.

This application is being referred to Technology Center AU 3723 for appropriate action by the Examiner in the normal course of business on the reply received September 11, 2008.

Alesia M. Brown
Petitions Attorney
Office of Petitions

UNITED STATES PATENT AND TRADEMARK OFFICE

UNITED STATES DEPARTMENT OF COMMERCE
United States Patent and Trademark Office
Address: COMMISSIONER FOR PATENTS
P.O. Box 1450
Alexandria, Virginia 22313-1450
www.uspto.gov

WEINGARTEN, SCHURGIN, GAGNEBIN & LEBOVICI LLP
TEN POST OFFICE SQUARE
BOSTON, MA 02109

Mail Date: 04/27/2010

Applicant	: John P. Ariola JR.	: DECISION ON REQUEST FOR
Patent Number	: 7621911	: RECALCULATION of PATENT
Issue Date	: 11/24/2009	: TERM ADJUSTMENT IN VIEW
Application No	: 11/412,553	: OF WYETH AND NOTICE OF INTENT TO
Filed	: 04/27/2006	: ISSUE CERTIFICATE OF CORRECTION
		:

The Request for Recalculation is **GRANTED** to the extent indicated.

The patent term adjustment has been determined to be **713** days. The USPTO will *sua sponte* issue a certificate of correction reflecting the amount of PTA days determined by the recalculation.

Prior to the issuance of the certificate of correction, the USPTO will afford patentee an opportunity to be heard and request reconsideration. Accordingly, patentee has **one month or thirty (30) days**, whichever is longer, to file a request for reconsideration of this patent term adjustment calculation. See 35 U.S.C. 154(b)(3)(B)(ii) and 37 CFR 1.322(a)(4). No extensions of time will be granted under 37 CFR 1.136.

Patentee should use document code PET.OP if electronically filing a request for reconsideration of this patent term adjustment calculation. The patentee must also include the information required by 37 CFR 1.705(b)(2) and the fee required by 37 CFR 1.18(e). If patentee does not file a timely request for reconsideration of this patent term adjustment calculation including the information required by 37 CFR 1.705(b)(2) and the fee required by 37 CFR 1.18(e), the USPTO will issue a certificate of correction reflecting the PTA determination noted above.

Patentee should be aware that in order to preserve the right to review in the United States District Court for the District of Columbia of the USPTO patent term adjustment determination, patentee must ensure that he or she also take the steps required under 35 U.S.C. 154(b)(4)(A) in a timely manner. Nothing in the request for recalculation should be construed as providing an alternative time frame for commencing a civil action under 35 U.S.C. 154(b)(4)(A).

Any questions concerning this decision should be directed to the Office of Patent Legal Administration at 571-272-7702.

UNITED STATES PATENT AND TRADEMARK OFFICE

UNITED STATES DEPARTMENT OF COMMERCE
United States Patent and Trademark Office
Address: COMMISSIONER FOR PATENTS
P.O. Box 1450
Alexandria, Virginia 22313-1450
www.uspto.gov

Medtronic
Attn: Noreen C. Johnson, IP Legal Department
2600 Sofamor Danek Drive
Memphis, TN 38132

Mail Date: 04/21/2010

Applicant	: Andrew M. Dickson	: DECISION ON REQUEST FOR
Patent Number	: 7575601	: RECALCULATION of PATENT
Issue Date	: 08/18/2009	: TERM ADJUSTMENT IN VIEW
Appliction No	: 11/412,556	: OF WYETH
Filed	: 04/27/2006	:
		:

The Patentee's Request for Recalculation is **DISMISSED.**

This Request is deemed ineligible for consideration for one or more of the following reasons:

(A). The patent for which PTA recalculation is requested is either a design or reissue application or is a reexamination proceeding;

(B). The patent for which PTA recalculation is requested resulted from a utility or plant application filed under 35 USC 111(a) before May 29, 2000 and no CPA filed in the application on/after May 29, 2000;

(C). The patent for which PTA recalculation is requested resulted from an international application in which the international filing date was before May 29, 2000 and no CPA filed in the application on/after May 29, 2000;

(D). The patent for which PTA recalculation is requested issued on/after March 2, 2010;

(E). The Request for Recalculation was filed more than 180 days after the grant date of the patent and the request was not filed within two months of a dismissal of a request for reconsideration of the of the patent term under 37 CFR 1.705(d);

(F). The Request for Recalculation is not solely limited to USPTO pre-Wyeth interpretation of 35 U.S.C. 154(b)(2)(A);

or

(G). A civil action was filed pursuant to 35 U.S.C. 154(b)(4)(A)concerning the same patent at issue in this request.

Patentee may file a reply to this decision dismissing the Request for Recalculation. Patentee must file such reply within one month or thirty days, whichever is longer, of the mail date of the decision dismissing the Request for Recalculation. No fee is required if patentee is asserting in the reply that the dismissal for ineligibility is improper.

Patentee should use document code PET.OP if electronically filing a reply to this dismissal. If the USPTO finds that the request was improperly deemed ineligible, the USPTO will mail applicant a recalculation determination.

Patentee should be aware that in order to preserve the right to review in the United States District Court for the District of Columbia of the USPTO patent term adjustment determination, patentee must ensure that he or she also take the steps required under 35 U.S.C. 154(b)(4)(A). Nothing in the request for recalculation should be construed as providing an alternative time frame for commencing a civil action under 35 U.S.C. 154 (b)(4)(A).

Any questions concerning this decision should be directed to the Office of Patent Legal Administration at 571-272-7702.

SPE RESPONSE FOR CERTIFICATE OF CORRECTION

Paper No.: _____

DATE : 6/20/09

TO SPE OF : ART UNIT 2819

SUBJECT : Request for Certificate of Correction for Appl. No.: 11412563 Patent No.: 7450042 B2

Please respond to this request for a certificate of correction within 7 days.

FOR IFW FILES:

Please review the requested changes/corrections as shown in the **COCIN** document(s) in the IFW application image. No new matter should be introduced, nor should the scope or meaning of the claims be changed.

Please complete the response (see below) and forward the completed response to scanning using document code **COCX**.

FOR PAPER FILES:

Please review the requested changes/corrections as shown in the attached certificate of correction. Please complete this form (see below) and forward it with the file to:

Certificates of Correction Branch (CofC)
South Tower - 9A22
Palm Location 7580
You can fax the Directors/SPE response to 571-270-9990

LAMONTE NEWSOME
Certificates of Correction Branch
703-308-9390 ext. 112

Thank You For Your Assistance

The request for issuing the above-identified correction(s) is hereby:
Note your decision on the appropriate box.

XApproved	**All** changes apply.
☐ **Approved in Part**	Specify below which changes **do not** apply.
☐ **Denied**	State the reasons for denial below.

Comments: Approved, does not change the scope of the claims

SPE RESPONSE FOR CERTIFICATE OF CORRECTION

Rexford Barnie, SPE Art Unit 2819

SPE Art Unit

UNITED STATES PATENT AND TRADEMARK OFFICE

UNITED STATES DEPARTMENT OF COMMERCE
United States Patent and Trademark Office
Address: COMMISSIONER FOR PATENTS
P.O. Box 1450
Alexandria, Virginia 22313-1450
www.uspto.gov

REISING ETHINGTON P.C.
P O BOX 4390
TROY, MI 48099-4390

Mail Date: 04/21/2010

Applicant	: Stefan Gebert	: DECISION ON REQUEST FOR
Patent Number	: 7578378	: RECALCULATION of PATENT
Issue Date	: 08/25/2009	: TERM ADJUSTMENT IN VIEW
Appliction No	: 11/412,638	: OF WYETH AND NOTICE OF INTENT TO
Filed	: 04/27/2006	: ISSUE CERTIFICATE OF CORRECTION
		:

The Request for Recalculation is **GRANTED** to the extent indicated.

The patent term adjustment has been determined to be **441** days. The USPTO will *sua sponte* issue a certificate of correction reflecting the amount of PTA days determined by the recalculation.

Prior to the issuance of the certificate of correction, the USPTO will afford patentee an opportunity to be heard and request reconsideration. Accordingly, patentee has **one month or thirty (30) days**, whichever is longer, to file a request for reconsideration of this patent term adjustment calculation. See 35 U.S.C. 154(b)(3)(B)(ii) and 37 CFR 1.322(a)(4). No extensions of time will be granted under 37 CFR 1.136.

Patentee should use document code PET.OP if electronically filing a request for reconsideration of this patent term adjustment calculation. The patentee must also include the information required by 37 CFR 1.705(b)(2) and the fee required by 37 CFR 1.18(e). If patentee does not file a timely request for reconsideration of this patent term adjustment calculation including the information required by 37 CFR 1.705(b)(2) and the fee required by 37 CFR 1.18(e), the USPTO will issue a certificate of correction reflecting the PTA determination noted above.

Patentee should be aware that in order to preserve the right to review in the United States District Court for the District of Columbia of the USPTO patent term adjustment determination, patentee must ensure that he or she also take the steps required under 35 U.S.C. 154(b)(4)(A) in a timely manner. Nothing in the request for recalculation should be construed as providing an alternative time frame for commencing a civil action under 35 U.S.C. 154(b)(4)(A).

Any questions concerning this decision should be directed to the Office of Patent Legal Administration at 571-272-7702.

UNITED STATES PATENT AND TRADEMARK OFFICE

Commissioner for Patents
United States Patent and Trademark Office
P.O. Box 1450
Alexandria, VA 22313-1450
www.uspto.gov

AT&T CORP.
ROOM 2A207
ONE AT&T WAY
BEDMINSTER NJ 07921

COPY MAILED

SEP 17 2008

OFFICE OF PETITIONS

In re Application of :
Patrick P. **Iannone** et al. :
Application No. 11/412,645 : DECISION ON PETITION
Filed: April 27, 2006 :
Attorney Docket No. 2005-0510 :

This is a decision on the petition under the unintentional provisions of 37 CFR 1.137(b), filed June 27, 2008, to revive the above-identified application.

The petition is GRANTED.

The application became abandoned for failure to timely pay the issue fee on or before May 20, 2008, as required by the Notice of Allowance and Fee(s) Due, mailed February 20, 2008, which set a statutory period for reply of three (3) months. Accordingly, the application became abandoned on May 21, 2008. A Notice of Abandonment was mailed on June 18, 2008.

The petition satisfies the requirements of 37 CFR 1.137(b) in that petitioner has supplied (1) the reply in the form of the $1440.00 issue fee, (2) the petition fee of $1540.00, and (3) a proper statement of unintentional delay. Accordingly, the failure to timely pay the issue fee, as required by the Notice of Allowance, is accepted as being unintentionally delayed.

There is no indication that the person signing the petition was ever given a power of attorney to prosecute the application. If the person signing the petition desires to receive future correspondence regarding this application, the appropriate power of attorney documents must be submitted. While a courtesy copy of this decision is being mailed to the person signing the petition, all future correspondence will be directed to the address currently of record until appropriate instructions are received.

It is not apparent whether the person signing the statement of unintentional delay was in a position to have firsthand knowledge of the facts and circumstances of the delay at issue. Nevertheless, such statement is being treated as having been made as a result of a reasonable inquiry into the facts and circumstances of such delay. See 37 CFR 10.18(b) and Changes to Patent Practice and Procedure; Final Rule Notice, 62 Fed. Reg. 53131, 53178 (October 10, 1997), 1203 Off. Gaz. Pat. Office 63, 103 (October 21, 1997). In the event such an inquiry has not been made, petitioner must make such an inquiry. If such inquiry results in the discovery that it is not correct that the entire delay in filing the required reply from the due date for the reply until the filing of a grantable petition pursuant to 37 CFR 1.137(b) was unintentional, petitioner must notify the Office.

Telephone inquiries concerning this decision should be directed to Phyllis Spivack at 571-272-6052 or in her absence, the undersigned at (571) 272-7099.

This application is being referred to the Office of Data Management for further processing.

David Bucci
Petitions Examiner
Office of Petitions

cc: Robert T. Canavan
62 Grove Street
Somerville, NJ 08876

UNITED STATES PATENT AND TRADEMARK OFFICE

Commissioner for Patents
United States Patent and Trademark Office
P.O. Box 1450
Alexandria, VA 22313-1450
www.uspto.gov

Paper No.

Friedrich Kueffner
Suite 910
317 Madison Avenue
New York NY 10017

MAILED

MAR 16 2009

OFFICE OF PETITIONS

In re Application of :
Albert Eugster : DECISION ON PETITION
Application No. 11/412,661 :
Filed: April 26, 2006 :
Attorney Docket No. GR-69 :

This is a decision on the "REQUEST TO WITHDRAW HOLDING OF ABANDONMENT" filed October 27, 2008.

The above-identified application became abandoned for failure to file a response to the non-final Office action mailed March 31, 2008. This Office action set a three-month shortened statutory period for reply, with extensions of time obtainable under the provisions of 37 CFR 1.136(a). No reply considered received and no extension of time considered obtained, the above-identified application became abandoned effective July 1, 2008. A courtesy Notice of Abandonment was mailed on October 16, 2008.

In response, the instant petition was timely filed. Petitioner maintains that a response to the Office action was timely filed on September 30, 2008, with an extension of time. In support thereof, applicants submit a copy of their itemized and date-stamped return postcard and a copy of the amendment they maintain was filed on October 6, 2008 (with a certificate of mailing dated September 30, 2008).

A postcard receipt, which itemizes and properly identifies the items, which are being filed, serves as prima facie evidence of receipt in the Office of all items listed thereon on the date stamped thereon by the Office. See MPEP 503. This evidence is persuasive. However, consideration of this evidence is

unnecessary. The amendment is present in the application with a date of receipt of October 6, 2008 and a certificate of mailing dated September 30, 2008.

The three-month extension of time is of record in the application with a date of receipt of September 30, 2008.

Accordingly, the Notice of Abandonment mailed October 16, 2008 and the holding of abandonment are hereby **WITHDRAWN**.

The petition under § 1.181 is **GRANTED**.

No fee is required on petition under § 1.181.

Technology Center AU 3653 has been advised of this decision. The application is, thereby, forwarded to the Technology Center's Technical Support Staff to withdraw the holding of abandonment and for consideration by the examiner of the amendment filed October 6, 2008 (with a certificate of mailing dated September 30, 2008)(and resubmitted on petition filed October 27, 2008).

Telephone inquiries specific to this decision should be directed to the undersigned at (571) 272-3219.

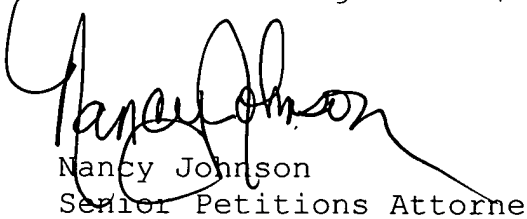

Nancy Johnson
Senior Petitions Attorney
Office of Petitions

UNITED STATES PATENT AND TRADEMARK OFFICE

COMMISSIONER FOR PATENTS
UNITED STATES PATENT AND TRADEMARK OFFICE
P.O. BOX 1450
ALEXANDRIA, VA 22313-1450
WWW.USPTO.GOV

Paper No. None

MILLER LAW GROUP, PLLC
25 STEVENS AVENUE
WEST LAWN PA 19609

COPY MAILED
OCT 3 0 2006
OFFICE OF PETITIONS

In re Application of :
Terrence L. Snyder :
Application No. 11/412,663 : DECISION ON PETITION UNDER
Filed: April 27, 2006 : 37 C.F.R. §1.182
Title: DOUBLE ARMED FINISHING :
TOOL FOR TUBING MATERIALS :

This is a decision on the petition filed June 19, 2006, requesting that the above-identified application, including Figures 1-8, be accorded a filing date of April 27, 2006 as part of the original disclosure.

The application was deposited on April 27, 2006. However, on June 13, 2006, the Office of Initial Patent Examination (OIPE) mailed a "Notice of Incomplete Nonprovisional Application - Filing Date not Granted" (notice), stating that the application had not been accorded a filing date, and that a filing date would be accorded upon the deposit of drawings. The notice set a two-month period of reply.

In response, on June 19, 2006, applicants filed the present petition. The petition is accompanied by a declaration and a copy of Figures 1-8, along with a copy of applicants' postcard receipt acknowledging receipt of "eight sheets of drawings" in the United States Patent and Trademark Office (Office) on April 27, 2006. Applicants request that Figures 1-8 be accorded a filing date of April 27, 2006.

The electronic file has been reviewed, and it does not appear to contain any sheets of drawings. However, the evidence is convincing that the application papers deposited on April 27, 2006 included eight sheets of drawings, and each of these sheets was subsequently misplaced in the Office.

Therefore, the application, including Figures 1-8, was complete on filing and entitled to a filing date of April 27, 2006 as part of the original disclosure.

Accordingly, the petition under 37 C.F.R. §1.182 is **GRANTED**.

The notice was sent in error, and is hereby **VACATED**. Therefore, no petition fee is necessary.

OIPE will be advised to process the application with a filing date of April 27, 2006, using the original application papers filed on that date, as well as Figures 1-8 submitted on August 3, 2006, and for noting in Office records that Figures 1-8 was present on filing. OPIE will then mail a corrected filing receipt.

Telephone inquiries regarding this decision should be directed to the undersigned at (571) 272-3225. All other inquiries concerning examination procedures or status of the application should be directed to the Technology Center.

Paul Shanoski
Senior Attorney
Office of Petitions
United States Patent and Trademark Office

UNITED STATES PATENT AND TRADEMARK OFFICE

Commissioner for Patents
United States Patent and Trademark Office
P.O. Box 1450
Alexandria, VA 22313-1450
www.uspto.gov

FITCH EVEN TABIN & FLANNERY
120 SOUTH LASALLE STREET
SUITE 1600
CHICAGO, IL 60603-3406

COPY MAILED
MAR 01 2010

In re Application of	:	
Heydon et al.	:	DECISION ON PETITION
Application No. 11/412,670	:	TO WITHDRAW
Filed: April 27, 2006	:	FROM RECORD
Attorney Docket No. GUIDP007	:	

This is a decision on the Request to Withdraw as attorney or agent of record under 37 C.F.R. § 1.36(b), filed December 23, 2009.

The request is **NOT APPROVED** because it is moot.

A review of the file record indicates that on February 12, 2010 the power of attorney to Fitch Even Tabin & Flannery was revoked by the assignee of the patent application. Accordingly, the request to withdraw under 37 C.F.R. § 1.36(b) is moot.

All future communications from the Office will be directed to the below-listed address until otherwise notified by applicant.

Telephone inquires concerning this decision should be directed to the undersigned at 571-272- 7751. All other inquires concerning either the examination or status of the application should be directed to the Technology Center.

Joan Olszewski
Petitions Examiner
Office of Petitions

cc: VAN PELT, YI & JAMES LLP
10050 N. FOOTHILL BLVD #200
CUPERTINO CA 95014

UNITED STATES PATENT AND TRADEMARK OFFICE

Commissioner for Patents
United States Patent and Trademark Office
P.O. Box 1450
Alexandria, VA 22313-1450
www.uspto.gov

Townsend and Townsend and Crew LLP
Two Embarcadero Center
Eighth Floor
San Francisco, CA 94111-3834

COPY MAILED

SEP 19 2007

OFFICE OF PETITIONS

In re Application of :
Yaniv Kopelman et al. :
Application No. 11/412,672 : DECISION ON PETITION
Filed: April 26, 2006 : TO WITHDRAW
Attorney Docket No. MP0739 : FROM RECORD
:

This is a decision on the Request to Withdraw as attorney or agent of record under 37 C.F.R. § 1.36(b), filed March 29, 2007.

The request is **NOT APPROVED**.

A grantable request to withdraw as attorney/agent of record must be signed by every attorney/agent seeking to withdraw or contain a clear indication that one attorney is signing on behalf of another/others. A request to withdraw will not be approved unless at least 30 (thirty) days would remain between the date of approval and the later of the expiration date of a time to file a response or the expiration date of the maximum time period which can be extended under 37 C.F.R. § 1.136(a).

The request cannot be approved because customer number 20350 was not used to appoint the attorneys of record, customer number 55361 needs to be used to withdraw the attorneys of record.

All future communications from the Office will continue to be directed to the above-listed address until otherwise notified by applicant.

Telephone inquiries concerning this decision should be directed to Terri Williams at 571-272- 2991.

T. Williams

Terri Williams
Petitions Examiner
Office of Petitions

cc: **Brinks Hofer Gilson & Lione/Marvell**
P.O. Box 10395
Chicago, IL 60610

UNITED STATES PATENT AND TRADEMARK OFFICE

Commissioner for Patents
United States Patent and Trademark Office
P.O. Box 1450
Alexandria, VA 22313-1450
www.uspto.gov

SANTANGELO LAW OFFICES, P.C.
125 SOUTH HOWES, THIRD FLOOR
FORT COLLINS CO 80521

COPY MAILED

JUL 2 0 2007

OFFICE OF PETITIONS

In re Application of :
Francis M. Carlson :
Application No. 11/412,674 : ON PETITION
Filed: April 26, 2006 :
Attorney Docket No. YATES-CDP-CONT1 :

This is a decision on the petition, filed July 19, 2007, under 37 CFR 1.313(c)(2) to withdraw the above-identified application from issue after payment of the issue fee.

The petition is **GRANTED.**

The above-identified application is withdrawn from issue for consideration of a submission under 37 CFR 1.114 (request for continued examination). See 37 CFR 1.313(c)(2).

Petitioner is advised that the issue fee paid on March 1, 2007 in the above-identified application cannot be refunded. If, however, the above-identified application is again allowed, petitioner may request that it be applied towards the issue fee required by the new Notice of Allowance.[1]

Telephone inquiries should be directed to the undersigned at (571) 272-3208.

The examiner of Technology Center AU 3672 will consider the request for continued examination under 37 CFR 1.114.

Karen Creasy

Karen Creasy
Petitions Examiner
Office of Petitions

[1] The request to apply the issue fee to the new Notice may be satisfied by completing and returning the new Issue Fee Transmittal Form PTOL-85(b), which includes the following language thereon: "Commissioner for Patents is requested to apply the Issue Fee and Publication Fee (if any) or re-apply any previously paid issue fee to the application identified above." Petitioner is advised that, whether a fee is indicated as being due or not, the Issue Fee Transmittal Form **must** be completed and timely submitted to avoid abandonment. Note the language in bold text on the first page of the Notice of Allowance and Fee(s) Due (PTOL-85).

UNITED STATES PATENT AND TRADEMARK OFFICE

Commissioner for Patents
United States Patent and Trademark Office
P.O. Box 1450
Alexandria, VA 22313-1450
www.uspto.gov

MORRISON & FOERSTER, LLP
755 PAGE MILL ROAD
PALO ALTO, CA 94304-1018

COPY MAILED

JAN 29 2008

OFFICE OF PETITIONS

In re Application of	:	
TABARES, et al.	:	
Application No. 11/412,685	:	DECISION ON PETITION
Filed: April 26, 2006	:	TO WITHDRAW
Attorney Docket No. **PC19498A**	:	FROM RECORD
	:	

This is a decision on the Request to Withdraw as attorney or agent of record under 37 C.F.R. § 1.36(b), filed May 23, 2007.

The request is **NOT APPROVED** as moot.

A review of the file record indicates that the power of attorney to **MORRISON & FOERSTER, LLP** has been revoked by the assignee of the patent application on September 26, 2007. Accordingly, the request to withdraw under 37 C.F.R. § 1.36(b) is moot.

All future communications from the Office will continue to be directed to the below-listed address until otherwise notified by applicant.

Telephone inquires concerning this decision should be directed to the undersigned at (571) 272-7253.

Monica A. Graves
Petitions Examiner
Office of Petitions

cc: **PFIZER INC.**
PATENT DEPARTMENT, MS8260-1611
EASTERN POINT ROAD
GROTON, CT 06340

UNITED STATES PATENT AND TRADEMARK OFFICE

Commissioner for Patents
United States Patent and Trademark Office
P.O. Box 1450
Alexandria, VA 22313-1450
www.uspto.gov

PFIZER INC.
PATENT DEPARTMENT
BLD 114 M/S 114
EASTERN POINT ROAD
GROTON CT 06340

COPY MAILED

DEC 0 8 2009

OFFICE OF PETITIONS

In re Application of :
Tabares, et al. :
Application No. 11/412,685 : DECISION
Filed: 26 April, 2006 :
Attorney Docket No. PC19498A :

This is a decision on the petition filed on 24 August, 2009, pursuant to 37 C.F.R. §1.137(b) for revival of an application abandoned due to unintentional delay .

The petition under 37 C.F.R. §1.137(b) is **DISMISSED**.

Any further petition to revive must be submitted within TWO (2) MONTHS from the mail date of this decision. Extensions of time under 37 C.F.R. §1.136(a) are permitted. The reconsideration request should include a cover letter entitled "Renewed Petition under 37 C.F.R. §1.137(b)."

This is **not** a final agency action within the meaning of 5 U.S.C.§704.

As to the Allegations
of Unintentional Delay

The requirements of a grantable petition pursuant to 37 C.F.R. §1.137(b) are the petition and fee therefor, a reply, a proper statement of unintentional delay under the regulation, and, where applicable, a terminal disclaimer and fee. (However, it does not appear that a terminal disclaimer and fee are due here.)

Petitioner does not appear to have addressed satisfactorily the statement/showing-of-delay requirement under the rule. This deficiency must be overcome.

Petitioners' attentions always are directed to the guidance in the Commentary at MPEP §711.03(c)(II).

BACKGROUND

The record reflects as follows:

Petitioner failed to reply timely and properly to the final Office action mailed on 27 December, 2007, with reply due absent an extension of time on or before 27 March, 2008.

The application went abandoned after midnight 27 March, 2008.

The Office mailed the Notice of Abandonment on 28 August, 2008.

On 24 August, 2009, Petitioner filed a petition pursuant to 37 C.F.R. §1.137(b), with fee, a reply in the form of an amendment after final, which the Examiner has refused to enter and Petitioner as one registered to practice before the Office is aware is not a proper reply to a final Office action (if it does not *prima facie* place the application in condition for allowance),[1] and made a statement of unintentional delay—however, it does not appear that there is a showing provided as to the factual basis for the averred unintentional delays that have occurred since midnight 27 March, 2008.

Again, Petitioners' attentions always are directed to the guidance in the Commentary at MPEP §711.03(c)(II).

The availability of applications and application papers online to applicants/practitioners who diligently associate their Customer Number with the respective application(s) now provides an applicant/practitioner on-demand information as to events/transactions in an application.

Out of an abundance of caution, Petitioners always are reminded that those registered to practice and all others who make representations before the Office **must** inquire into the underlying facts of representations made to the Office and support averments with the appropriate documentation–since all owe to the Office the continuing duty to disclose.[2]

STATUTES, REGULATIONS AND ANALYSIS

Congress has authorized the Commissioner to "revive an application if the delay is shown to the satisfaction of the Commissioner to have been "unavoidable." 35 U.S.C. §133 (1994).[3]

---

[1] A proper reply is an amendment *prima facie* placing the application in condition for allowance, a Notice of Appeal, or an RCE (with fee and submission under 37 C.F.R. §1.114). (See: MPEP §711.03(c).)

[2] See supplement of 17 June, 1999. The Patent and Trademark Office is relying on petitioner's duty of candor and good faith and accepting a statement made by Petitioner. See Changes to Patent Practice and Procedure, 62 Fed. Reg. at 53160 and 53178, 1203 Off. Gaz. Pat. Office at 88 and 103 (responses to comments 64 and 109)(applicant obligated under 37 C.F.R. §10.18 to inquire into the underlying facts and circumstances when providing statements to the Patent and Trademark Office).

[3] 35 U.S.C. §133 provides:

The regulations at 37 C.F.R. §1.137(a) and (b) set forth the requirements for a Petitioner to revive a previously unavoidably or unintentionally, respectively, abandoned application under this congressional grant of authority.

Unintentional delays are those that do not satisfy the very strict statutory and regulatory requirements of unavoidable delay, and also, by definition, are not intentional.[4]))

As to Allegations of
Unintentional Delay

As indicated above, the requirements of a grantable petition pursuant to 37 C.F.R. §1.137(b) are the petition and fee therefor, a proper reply, a proper statement and/or showing of unintentional delay under the regulation, and, where applicable, a terminal disclaimer and fee.

As discussed above, it does not appear that Petitioner has satisfied the reply and the statement/showing-of-delay requirements under the rule.

CONCLUSION

Accordingly, the petition under 37 C.F.R. §1.137(b) is **dismissed**.

Further correspondence with respect to this matter should be addressed as follows:

By Mail:
Mail Stop PETITION
Commissioner for Patents
P. O. Box 1450
Alexandria, VA 22313-1450

By hand:
U. S. Patent and Trademark Office
Customer Service Window, Mail Stop Petitions
Randolph Building
401 Dulany Street
Alexandria, VA 22314

By facsimile:
(571) 273-8300
Attn: Office of Petitions

---

35 U.S.C. §133 Time for prosecuting application.
Upon failure of the applicant to prosecute the application within six months after any action therein, of which notice has been given or mailed to the applicant, or within such shorter time, not less than thirty days, as fixed by the Commissioner in such action, the application shall be regarded as abandoned by the parties thereto, unless it be shown to the satisfaction of the Commissioner that such delay was unavoidable.

[4] Therefore, by example, an unintentional delay in the reply might occur if the reply and transmittal form are to be prepared for shipment by the US Postal Service, but other pressing matters distract one's attention and the mail is not timely deposited for shipment.

Telephone inquiries regarding this decision may be directed to the undersigned at (571) 272-3214—it is noted, however, that all practice before the Office is in writing (see: 37 C.F.R. §1.2[5]) and the proper authority for action on any matter in this regard are the statutes (35 U.S.C.), regulations (37 C.F.R.) and the commentary on policy (MPEP). Therefore, no telephone discussion may be controlling or considered authority for Petitioner's action(s).

/John J. Gillon, Jr./
John J. Gillon, Jr.
Senior Attorney
Office of Petitions

[5] The regulations at 37 C.F.R. §1.2 provide:

§1.2 Business to be transacted in writing.

All business with the Patent and Trademark Office should be transacted in writing. The personal attendance of Petitioners or their attorneys or agents at the Patent and Trademark Office is unnecessary. The action of the Patent and Trademark Office will be based exclusively on the written record in the Office. No attention will be paid to any alleged oral promise, stipulation, or understanding in relation to which there is disagreement or doubt.

UNITED STATES PATENT AND TRADEMARK OFFICE

Commissioner for Patents
United States Patent and Trademark Office
P.O. Box 1450
Alexandria, VA 22313-1450
www.uspto.gov

STRIKER, STRIKER & STENBY
103 EAST NECK ROAD
HUNTINGTON, NY 11743

MAILED

JUN 23 2009

OFFICE OF PETITIONS

In re Application of :
Rainer Glauning, et al. :
Application No. 11/412,687 : ON PETITION
Filed: April 27, 2006 :
Attorney Docket No. 3669 :

This is a decision on the petition, filed May 27, 2009, which is being treated as a petition under 37 CFR 1.181 (no fee) requesting withdrawal of the holding of abandonment in the above-identified application.

The petition is **DISMISSED**.

Any request for reconsideration of this decision should be filed within two (2) months from the mail date of this decision. *Note* 37 CFR 1.181(f). The request for reconsideration should include a cover letter and be entitled as a "Renewed Petition under 37 CFR 1.181 to Withdraw the Holding of Abandonment."

The application became abandoned for failure to timely reply within the meaning of 37 CFR 1.113 to the final Office action, mailed July 10, 2008. A Notice of Abandonment was mailed on February 19, 2009.

Petitioner asserts that the file of the subject application was reviewed and there is no indication that the Office action of July 10, 2008 was received. Petitioner submits a copy of a page from the Office Docket Book and computer page where the due date for reply would have appeared.

A review of the written record indicates no irregularity in the mailing of the Office action on July 10, 2008, and, in the absence of any irregularity, there is a strong presumption that the Office action was properly mailed to the practitioner at the address of record. This presumption may be overcome by a showing that the Office action was not in fact received.

The showing required to establish non-receipt of an Office communication must include a statement from the practitioner describing the system used for recording an Office action received at the correspondence address of record with the USPTO. The statement should establish that the docketing system is sufficiently reliable. It is expected that the record would include, but not be limited to, the application number, attorney docket number, the mail date of

the Office action and the due date for the response. Practitioner must state that the Office action was not received at the correspondence address of record, and that a search of the practitioner's record(s), including any file jacket or the equivalent, and the application contents, indicates that the Office action was not received. A copy of the record(s) used by the practitioner where the non-received Office action would have been entered had it been received is required. A copy of the practitioner's record(s) required to show non-receipt of the Office action should include the master docket for the firm. That is, if a three month period for reply was set in the non-received Office action, a copy of the master docket report showing all replies docketed for a date three months from the mail date of the non-received Office action must be submitted as documentary proof of non-receipt of the Office action. If no such master docket exists, the practitioner should so state and provide other evidence such as, but not limited to, the following: the application file jacket; incoming mail log; calendar, reminder system, or the individual docket record for the application in question.

The instant petition does not establish non-receipt of the Notice in compliance with the procedures set for at MPEP 711.03(c). Specifically, the petition fails to describe the docketing system used for recording an Office action received at the correspondence address of record. Further, the copy of what appears to be the "master docket record" submitted with the petition is illegible.

Absent the required evidence to establish non-receipt of the Office action of July 10, 2008, the petition requesting withdrawal of the holding of abandonment cannot be granted at this time.

If petitioner cannot supply the evidence necessary to withdraw the holding of abandonment, or simply does not wish to, petitioner should consider filing a petition under 37 CFR 1.137(b) stating that the delay was unintentional. Public Law 97-247, § 3, 96 Stat. 317 (1982), which revised patent and trademark fees, amended 35 U.S.C. § 41(a)(7) to provide for the revival of an "unintentionally" abandoned application without a showing that the delay in prosecution or in late payment of the issue fee was "unavoidable." This amendment to 35 U.S.C. § 41(a)(7) has been implemented in 37 CFR 1.137(b). An "unintentional" petition under 37 CFR 1.137(b) must be accompanied by the required petition fee and reply.

The filing of a petition under 37 CFR 1.137(b) cannot be intentionally delayed and therefore must be filed promptly. A person seeking revival due to unintentional delay cannot make a statement that the delay was unintentional unless the entire delay, including the date it was discovered that the application was abandoned until the filing of the petition to revive under 37 CFR 1.137(b), was unintentional. A statement that the delay was unintentional is not appropriate if petitioner intentionally delayed the filing of a petition for revival under 37 CFR 1.137(b).

Further correspondence with respect to this matter should be delivered through one of the following mediums:

By mail: Mail Stop PETITIONS
Commissioner for Patents
Post Office Box 1450
Alexandria, VA 22313-1450

By hand: Customer Service Window
Mail Stop Petitions
Randolph Building
401 Dulany Street
Alexandria, VA 22314

By fax: (571) 273-8300
ATTN: Office of Petitions

By Internet: EFS-Web[1]

Telephone inquiries concerning this decision should be directed to the undersigned at (571) 272-3204.

Sherry D. Brinkley
Petitions Examiner
Office of Petitions

[1] www.uspto.gov/ebc/efs_help.html (for help using EFS-Web call the Patent Electronic Business Center at (866) 217-9197)

UNITED STATES PATENT AND TRADEMARK OFFICE

Commissioner for Patents
United States Patent and Trademark Office
P.O. Box 1450
Alexandria, VA 22313-1450
www.uspto.gov

STRIKER, STRIKER & STENBY
103 EAST NECK ROAD
HUNTINGTON, NY 11743

MAILED

AUG 19 2009

OFFICE OF PETITIONS

In re Application of :
Rainer Glauning, et al. :
Application No. 11/412,687 : DECISION ON PETITION
Filed: April 27, 2006 :
Attorney Docket No. 3669 :

This is a decision in response to the renewed petition, filed July 2, 2009, requesting withdrawal of the holding of abandonment in the above-identified application under 37 CFR 1.181 (no fee).

The petition is **GRANTED**.

This application was held abandoned for failure to reply in a timely manner to the final Office action, mailed July 10, 2008. A Notice of Abandonment was mailed on February 19, 2009. On May 27, 2009, a petition to withdraw the holding of abandonment under the provisions of 37 CFR 1.181 was filed; however, the petition was dismissed in a decision mailed June 23, 2009. In response, on July 2, 2009, the present petition was filed.

While petitioner has adequately supported his claim of non-receipt with the evidence provided, it is noted that a further review of the written record does indicate an irregularity in the mailing of the Notice of July 10, 2008. In this regard, the final Office action in question was returned to the U.S. Patent and Trademark Office by the U.S. Postal Service for some unknown reason on July 17, 2008.

Since the record also supports a conclusion that the final Office action was not received by petitioner, the Notice of Abandonment is hereby vacated and the holding of abandonment withdrawn.

This application is being referred to Technology Center AU 2833 for appropriate action in the normal course of business on the reply received May 27, 2009.

Telephone inquiries concerning this decision may be directed to the undersigned at (571) 272-3204. All other inquiries regarding this application should be directed to the Technology Center.

Sherry D. Brinkley
Petitions Examiner
Office of Petitions

UNITED STATES PATENT AND TRADEMARK OFFICE

Commissioner for Patents
United States Patent and Trademark Office
P.O. Box 1450
Alexandria, VA 22313-1450
www.uspto.gov

STRIKER, STRIKER & STENBY
103 EAST NECK ROAD
HUNTINGTON NY 11743

MAILED

APR 12 2010

OFFICE OF PETITIONS

In re Application of :
Rainer Glauning, et al. :
Application No. 11/412,687 : ON PETITION
Filed: April 27, 2006 :
Attorney Docket No. 3669 :

This is a decision on the renewed petition under the unintentional provisions of 37 CFR 1.137(b), filed February 3, 2010, to revive the above-identified application.

The petition is **GRANTED**.

The application became abandoned for failure to timely file a proper reply within the meaning of 37 CFR 1.113 to the final Office action of July 10, 2008. The proposed reply required for consideration of a petition to revive must be a Notice of Appeal (and appeal fee required by 37 CFR 41.20(b)(2), an amendment that *prima facie* places the application in condition for allowance, a Request for Continued Examination and submission (37 CFR 1.114), or the filing of a continuing application under 37 CFR 1.53(b). See MPEP 711.03(c)(III)(A)(2). No extensions of time pursuant to the provisions of 37 CFR 1.136(a) were obtained. Accordingly, the date of abandonment of this application is October 11, 2008. The Notice of Abandonment was mailed January 28, 2010.

The petition satisfies the requirements of 37 CFR 1.137(b) in that petitioner has supplied (1) the reply in the form of a Request for Continued Examination (RCE) and fee of $810, and the submission required by 37 CFR 1.114; (2) the petition fee of $1,620; and (3) a proper statement of unintentional delay.

Telephone inquiries concerning this decision should be directed to the undersigned at (571) 272-2991.

This application is being referred to Technology Center AU 2833 for processing of the RCE and for appropriate action by the Examiner in the normal course of business on the amendment submitted in accordance with 37 CFR 1.114.

Terri Johnson
Petitions Examiner
Office of Petitions

SPE RESPONSE FOR CERTIFICATE OF CORRECTION

DATE : 5-8-09 Paper No.: _____

TO SPE OF : ART UNIT 3612

SUBJECT : Request for Certificate of Correction for Appl. No.: 11/412,696 Patent No.: 7503611

Please respond to this request for a certificate of correction within 7 days.

FOR IFW FILES: Check Figs

Please review the requested changes/corrections as shown in the **COCIN** document(s) in the IFW application image. No new matter should be introduced, nor should the scope or meaning of the claims be changed.

Please complete the response (see below) and forward the completed response to scanning using document code **COCX**.

FOR PAPER FILES:

Please review the requested changes/corrections as shown in the attached certificate of correction. Please complete this form (see below) and forward it with the file to:

Certificates of Correction Branch (C of C)
Randolph Square 9C62-D
Palm Location 7580

Ennis Young
Certificates of Correction Branch
703-756-1542

Thank You For Your Assistance

The request for issuing the above-identified correction(s) is hereby:
Note your decision on the appropriate box.

☐ **Approved**	All changes apply.
☐ **Approved in Part**	Specify below which changes **do not** apply.
☒ **Denied**	State the reasons for denial below.

Comments: THE REPLACEMENT/AMENDED DRAWINGS ARE NOT A PART OF THE FILE. AS SUCH, THE APPLICANT MUST PROVIDE PROOF THAT THE AMENDED DRAWINGS WERE FILED ON 9/18/08 AS STATED.

D. GLENN DAYOAN
SUPERVISORY PATENT EXAMINER
TECHNOLOGY CENTER 3600

SPE

3612
Art Unit

UNITED STATES PATENT AND TRADEMARK OFFICE

Commissioner for Patents
United States Patent and Trademark Office
P.O. Box 1450
Alexandria, VA 22313-1450
www.uspto.gov

Date Mailed : June 16, 2009

Patent No. : 7,503,611 B2
Patent Issued : March 17, 2009
Docket No. : 60130-2677-PUS1
Re: Request for Certificate of Correction

Consideration has been given your request for the issuance of a certificate of correction for the above-identified patent under the provisions of Rule(s)1.322 .

The alleged error(s) The replacement /amended drawings are not a part of the file.As such, the applicant must provide proof that the amended drawings were filed on 9/18/08 as stated. the patent is printed in accordance with the record .In view of the foregoing, your request, in this matter(s), is hereby denied.

Further consideration/reconsideration will be given upon receipt of a Request for Reconsideration under, under the provision of U.SC.254 or 255 (C.F.R. 1.322 or 1.323), accompanied by the appropriate response or fee of $100, which should be directed to Decisions & Certificates of Correction Branch.

Ennis Young
Legal Instrument Examiner
(703) 756-1542

For Mary Diggs, Supervisor
Decisions & Certificates of Correction Branch
(703) 756-1580 or (703) 756-1814 (Receptionist)

UNITED STATES PATENT AND TRADEMARK OFFICE

COMMISSIONER FOR PATENTS
UNITED STATES PATENT AND TRADEMARK OFFICE
P.O. BOX 1450
ALEXANDRIA, VA 22313-1450
www.uspto.gov

COPY MAILED

SEP 26 2007

OFFICE OF PETITIONS

BLAKELY SOKOLOFF TAYLOR & ZAFMAN
1279 OAKMEAD PARKWAY
SUNNYVALE CA 94085-4040

In re Application of :
Trujillo, et al. : DECISION REFUSING STATUS
Application No. 11/412,698 : UNDER 37 CFR 1.47(a)
Filed: April 27, 2006 :
Atty. Dkt. No.: 042390.P24559 :
For: METHOD, SYSTEM AND :
APPARATUS FOR A PARSER FOR USE :
IN THE PROCESSING OF STRUCTURED :
DOCUMENTS :

This decision is in response to the petition under 37 CFR 1.47(b) filed October 26, 2006. This matter is being properly treated under 37 CFR 1.47(a).

The petition under 37 CFR 1.47(a) is **DISMISSED**.

Petitioners are given TWO MONTHS from the mailing date of this decision to reply, correcting the below-noted deficiencies. Any reply should be entitled "Request for Reconsideration of Petition Under 37 CFR 1.47(a)," and should only address the deficiencies noted herein. The reply under 37 CFR 1.47(a) may include an oath or declaration executed by the non-signing inventors. Any extensions of time will be governed by 37 CFR 1.136(a).

The above-identified application was filed April 27, 2007 without an executed oath or declaration. Accordingly, a Notice to File Missing Parts of Nonprovisional Application (Notice) was mailed May 24, 2006. The Notice required a surcharge and an executed oath or declaration.

A grantable petition under 37 CFR 1.47(a) requires: (1) proof that the non-signing inventor cannot be reached or refuses to sign the oath or declaration after having been presented with the application papers (specification, claims and drawings); (2) an acceptable oath or declaration in compliance with 35 U.S.C. §§ 115 and 116; (3) the petition fee; and (4) a statement of the last known address of the non-signing inventor.

As to item (2), an acceptable oath or declaration for the patent application in compliance with 37 CFR 1.63 and 1.64 has not been

presented. The declaration presented is unacceptable for the following reasons: the declaration contains non-initialed changes (*see*, 37 CFR 1.52(c)) and the declaration fails to set forth the citizenship of the non-signing inventor (*see*, 37 CFR 1.63(a)(3)). Correction is required.

The correspondence address indicated on the petition differs from that contained in the official record. If petitioner desires to receive correspondence at an address other than that contained in the record, the appropriate change of correspondence address must be submitted. The instant decision is being mailed to both addresses, however, all future correspondence concerning this application will be directed to the address of record until such time as instruction to the contrary is received.

Further correspondence with respect to this matter should be addressed as follows:

By mail:
Mail Stop Petition
Commissioner for Patents
P.O. Box 1450
Alexandria, VA 22313-1450

By facsimile:
(571) 273-8300

By hand:
U.S. Patent and Trademark Office
Customer Service Window
Mail Stop Petition
Randolph Building
401 Dulaney Street
Alexandria, VA 22314

Telephone inquiries related to this decision may be directed to the undersigned at (571) 272-3205.

Alesia M. Brown
Petitions Attorney
Office of Petitions

CC: Paul Mendonsa
BLAKELY, SOKOLOFF, TAYLOR & ZAFMAN, LLP
12400 Wilshire Boulevard
Seventh Floor
Los Angeles, CA 90025-1026

UNITED STATES PATENT AND TRADEMARK OFFICE

COMMISSIONER FOR PATENTS
UNITED STATES PATENT AND TRADEMARK OFFICE
P.O. BOX 1450
ALEXANDRIA, VA 22313-1450
www.uspto.gov

COPY MAILED

NOV 26 2007

OFFICE OF PETITIONS

BLAKELY SOKOLOFF TAYLOR & ZAFMAN
1279 OAKMEAD PARKWAY
SUNNYVALE CA 94085-4040

In re Application of :
Trujillo, et al. : DECISION GRANTING STATUS
Application No. 11/412,698 : UNDER 37 CFR 1.47(a)
Filed: April 27, 2006 :
Atty. Dkt. No.: 042390.P24559 :
For: METHOD, SYSTEM AND :
APPARATUS FOR A PARSER FOR USE :
IN THE PROCESSING OF STRUCTURED :
DOCUMENTS :

This decision is in response to the renewed petition under 37 CFR 1.47(a), filed October 9, 2007.

The petition is **GRANTED**.

Petitioners have shown that the non-signing inventor has refused to execute the declaration for the above-identified application and/or cannot be reached or located for presentation and execution of same, and is thus unavailable.

The above-identified application and papers have been reviewed and found in compliance with 37 CFR 1.47(a). This application is hereby accorded Rule 1.47(a) status.

As provided in Rule 1.47(c), this Office will forward notice of this application's filing to the non-signing inventors at the addresses given in the petition. Notice of the filing of this application will also be published in the Official Gazette.

This application is being forwarded to the Office of Initial Patent Examination for further processing.

Telephone inquiries regarding this decision should be directed to the undersigned at (571) 272-3205.

Alesia M. Brown
Petitions Attorney
Office of Petitions

UNITED STATES PATENT AND TRADEMARK OFFICE

COMMISSIONER FOR PATENTS
UNITED STATES PATENT AND TRADEMARK OFFICE
P.O. BOX 1450
ALEXANDRIA, VA 22313-1450
www.uspto.gov

COPY MAILED

NOV 26 2007

OFFICE OF PETITIONS

Howard Liu
3608 Thorp Springs
Piano, TX 75025

In re Application of :
Trujillo, et al. : LETTER
Application No. 11/412,698 :
Filed: April 27, 2006 :
Atty. Dkt. No.: 042390.P24559 :
For: METHOD, SYSTEM AND :
APPARATUS FOR A PARSER FOR USE :
IN THE PROCESSING OF STRUCTURED :
DOCUMENTS :

Dear Sir:

You are named as an inventor in the above-identified United States patent application filed under the provisions of 35 U.S.C. 116 (United States Code) and 37 C.F.R. § 1.47(a), Rules of Practice in Patent Cases. Should a patent be granted on the application you will be designated therein as a joint inventor.

As a named inventor you are entitled to inspect any paper in the file wrapper of the application, order copies of all or any part thereof (at a prepaid cost as per 37 C.F.R. § 1.19) or make your position of record in the application. Alternatively, you may arrange to do any of the preceding through a registered patent attorney or agent presenting written authorization from you. If you care to join the application, counsel of record (see below) would presumably assist you. Joining in the application would entail the filing of an appropriate oath or declaration by you pursuant to 37 C.F.R. § 1.63.

Requests for information regarding your application should be directed to the File Information Unit at (703) 308-2733. Information regarding how to pay for and order a copy of the application, or a specific paper in the application, should be directed to Certification Division at (703) 308-9726 or 1-800-972-6382 (outside the Washington D.C. area).

Alesia M. Brown
Petitions Attorney
Office of Petitions

UNITED STATES PATENT AND TRADEMARK OFFICE

Commissioner for Patents
United States Patent and Trademark Office
P.O. Box 1450
Alexandria, VA 22313-1450
www.uspto.gov

MARJAMA MULDOON BLASIAK & SULLIVAN LLP
250 SOUTH CLINTON STREET
SUITE 300
SYRACUSE NY 13202

COPY MAILED

NOV 0 5 2007

OFFICE OF PETITIONS

In re Application of	:	
Andrew Longacre Jr.	:	
Application No. 11/412,703	:	DECISION GRANTING PETITION
Filed: April 27, 2006	:	UNDER 37 CFR 1.313(c)(2)
Attorney Docket No. 283_205.09	:	

This is a decision on the petition under 37 CFR 1.313(c)(2), filed October 31, 2007, to withdraw the above-identified application from issue after payment of the issue fee.

The petition is **GRANTED**.

The above-identified application is withdrawn from issue for consideration of a submission under 37 CFR 1.114 (request for continued examination). *See* 37 CFR 1.313(c)(2).

Petitioner is advised that the issue fee paid on September 4, 2007 cannot be refunded. If, however, this application is again allowed, petitioner may request that it be applied towards the issue fee required by the new Notice of Allowance.[1]

Telephone inquiries should be directed to the undersigned at (571) 272-3208.

This application is being referred to Technology Center AU 2876 for processing of the request for continued examination under 37 CFR 1.114 and for consideration of the concurrently filed IDS.

Karen Creasy
Petitions Examiner
Office of Petitions

[1] *The request to apply the issue fee to the new Notice may be satisfied by completing and returning the new Part B – Fee(s) Transmittal Form (along with any balance due at the time of submission). Petitioner is advised that the Issue Fee Transmittal Form* ***must*** *be completed and timely submitted to avoid abandonment of the application.*

UNITED STATES PATENT AND TRADEMARK OFFICE

COMMISSIONER FOR PATENTS
UNITED STATES PATENT AND TRADEMARK OFFICE
P.O. BOX 1450
ALEXANDRIA, VA 22313-1450
WWW.USPTO.GOV

Paper No.

BRIDGESTONE AMERICAS HOLDING, INC.
1200 FIRESTONE PARKWAY
AKRON OH 44317

COPY MAILED

MAR 17 2008

OFFICE OF PETITIONS

In re Application of :
Kenneth L. Allen et al. :
Application No. 11/412,710 : DECISION ON PETITION
Filed: April 27, 2006 : UNDER 37 C.F.R. § 1.137(f)
Attorney Docket No. P06036US1A :
Title: TIRE REPLACEMENT SYSTEM :
FOR COMPACT TRACTOR :

This is a decision on the petition filed on December 17, 2007, pursuant to 37 C.F.R. § 1.137(f), to revive the above-identified application.

This petition pursuant to 37 C.F.R. § 1.137(f) is **DISMISSED**.

A grantable petition pursuant to 37 CFR § 1.137(f) must be accompanied by:

(1) Notification of the filing of an application in a foreign country or under a multinational treaty that requires 18 month publication[1];
(2) The petition fee as set forth in 37 C.F.R. § 1.17(m), and;
(3) A statement that the entire delay in filing the notice from the date that the notice was due under 35 U.S.C. §122(b)(2)(B)(iii) until the date the notice was filed was unintentional. The Commissioner may require additional information where there is a question whether the delay was unintentional.

1 See PTO/SB/36 and paragraph on PTO/SB/64a for further information. Both may be downloaded at http://www.uspto.gov/web/forms/index.html.

Petitioner has submitted the petition fee, notification of the filing of an application in a foreign country or under a multinational treaty that requires 18 month publication, and the proper statement of unintentional delay.

However, **it does not appear that Petitioner has submitted a rescission of the previously made nonpublication request.**

On renewed petition, **Petitioner might wish to consider rescinding the previously made nonpublication request.** For Petitioner's convenience, a blank Rescission of Previous Nonpublication Request, Patent Form (PTO/SB/36), may be found at http://www.uspto.gov/web/forms/sb0036.pdf.

Any response must be submitted within **TWO MONTHS** from the mail date of this decision. Extensions of time under 37 C.F.R. § 1.136(a) are permitted. The submission should include a cover letter entitled "Renewed Petition pursuant to 37 C.F.R. § 1.137(f)."

The renewed petition should indicate in a prominent manner that the attorney handling this matter is Paul Shanoski, and may be submitted by mail[2], hand-delivery[3], or facsimile[4].

If responding by mail, Petitioner is advised not to place the undersigned's name on the envelope. Only the information that appears in the footnote should be included - adding anything else to the address will delay the delivery of the response to the undersigned.

It is noted that the address listed on the petition differs from the address of record. The application file does not indicate that a change of correspondence address has been filed in this case, although the address given on the petition differs from the address of record. If Petitioner desires to receive future correspondence regarding this application, the change of correspondence address must be submitted. A courtesy copy of this decision will be mailed to Petitioner. However, all future correspondence will be directed to the address of record until such time as appropriate instructions are received to the contrary. Petitioner will not receive future correspondence related to this application unless Change of Correspondence

---

2 Mail Stop Petition, Commissioner for Patents, United States Patent and Trademark Office, P.O. Box 1450, Alexandria, VA, 22313-1450.
3 Customer Window, Randolph Building, 401 Dulaney Street, Alexandria, VA, 22314.
4 (571) 273-8300- please note this is a central facsimile number.

Address, Patent Form (PTO/SB/122) is submitted for the above-identified application. For Petitioner's convenience, a blank Change of Correspondence Address, Patent Form (PTO/SB/122), may be found at http://www.uspto.gov/web/forms/sb0122.pdf.

It is not apparent whether the person signing the statement of unintentional delay was in a position to have firsthand or direct knowledge of the facts and circumstances of the delay at issue. Nevertheless, such statement is being treated as having been made as the result of a reasonable inquiry into the facts and circumstances of such delay[5]. In the event that such an inquiry has not been made, Petitioner must make such an inquiry. If such inquiry results in the discovery that the delay was intentional, Petitioner must notify the Office.

Telephone inquiries regarding *this decision* should be directed to the undersigned at (571) 272-3225[6]. All other inquiries concerning examination procedures or status of the application should be directed to the Technology Center.

/Paul Shanoski/
Paul Shanoski
Senior Attorney
Office of Petitions

cc: Lucian Wayne Beavers
Waddey & Patterson
1600 Division Street, Suite 500
Nashville, TN 37203

---

5 See 37 C.F.R. § 10.18(b); cf. Changes to Patent Practice and Procedure; Final Rule Notice, 62 Fed. Reg. 53131, 53178 (October 10, 1997), 1203 Off. Gaz. Pat. Office 63, 103 (October 21, 1997).

6 Petitioner will note that all practice before the Office should be in writing, and the action of the Office will be based exclusively on the written record in the Office. See 37 C.F.R. § 1.2. As such, Petitioner is reminded that no telephone discussion may be controlling or considered authority for any further action(s) of Petitioner.

UNITED STATES PATENT AND TRADEMARK OFFICE

COMMISSIONER FOR PATENTS
UNITED STATES PATENT AND TRADEMARK OFFICE
P.O. BOX 1450
ALEXANDRIA, VA 22313-1450
WWW.USPTO.GOV

Paper No.

BRIDGESTONE AMERICAS HOLDING, INC.
1200 FIRESTONE PARKWAY
AKRON OH 44317

COPY MAILED
DEC 19 2008

In re Application of :
Kenneth L. Allen et al. :
Application No. 11/412,710 : DECISION ON RENEWED PETITION
Filed: April 27, 2006 : UNDER 37 C.F.R. § 1.137(f)
Attorney Docket No. P06036US1A :
Title: TIRE REPLACEMENT SYSTEM :
FOR COMPACT TRACTOR :

This is a decision on the renewed petition filed on April 7, 2008, pursuant to 37 C.F.R. § 1.137(f), to revive the above-identified application.

This renewed petition pursuant to 37 C.F.R. § 1.137(f) is **GRANTED.**

A grantable petition pursuant to 37 CFR § 1.137(f) must be accompanied by:

(1) Notification of the filing of an application in a foreign country or under a multinational treaty that requires 18 month publication;[1]
(2) The petition fee as set forth in 37 C.F.R. § 1.17(m), and;
(3) A statement that the entire delay in filing the notice from the date that the notice was due under 35 U.S.C. § 122(b)(2)(B)(iii) until the date the notice was filed was unintentional. The Commissioner may require additional information where there is a question whether the delay was unintentional.

1 See PTO/SB/36 and paragraph on PTO/SB/64a for further information. Both may be downloaded at http://www.uspto.gov/web/forms/index.html.

An original petition pursuant to 37 C.F.R. § 1.137(f) was filed on December 17, 2007, along with the petition fee, notification of the filing of an application in a foreign country or under a multinational treaty that requires 18 month publication, and the proper statement of unintentional delay.

The original petition was dismissed via the mailing of a decision on March 17, 2008, as Petitioner did not rescind the previously made nonpublication request.

With this renewed petition, Petitioner has rescinded the previously made nonpublication request.

This renewed petition has been found to be in compliance with 37 C.F.R. § 1.137(f). Accordingly, the failure to timely notify the Office of a foreign or international filing within 45 days after the date of filing of such foreign or international application as provided by 35 U.S.C. §122(b)(2)(B)(iii) and 37 C.F.R. § 1.213(c) is accepted as having been unintentionally delayed.

The previous Request and Certification under 35 U.S.C. §122(b)(2)(B)(i), filed with the original application papers, has been rescinded. A Notice Regarding Rescission of Nonpublication Request which sets forth the projected publication date of March 26, 2009 accompanies this decision on petition.

The Technology Center will be notified of this decision. The Technology Center's support staff will notify the Examiner of this decision, so that the present application can receive further processing in due course.

It is noted that the address listed on the petition differs from the address of record. The application file does not indicate that a change of correspondence address has been filed in this case, although the address given on the petition differs from the address of record. If Petitioner desires to receive future correspondence regarding this application, the change of correspondence address must be submitted. A courtesy copy of this decision will be mailed to Petitioner. However, all future correspondence will be directed to the address of record until such time as appropriate instructions are received to the contrary. Petitioner will not receive future correspondence related to this application unless Change of Correspondence Address, Patent Form (PTO/SB/122) is submitted for the above-identified application. For Petitioner's convenience, a blank

Change of Correspondence Address, Patent Form (PTO/SB/122), may be found at http://www.uspto.gov/web/forms/sb0122.pdf.

It is not apparent whether the person signing the statement of unintentional delay was in a position to have firsthand or direct knowledge of the facts and circumstances of the delay at issue. Nevertheless, such statement is being treated as having been made as the result of a reasonable inquiry into the facts and circumstances of such delay.[2] In the event that such an inquiry has not been made, Petitioner must make such an inquiry. If such inquiry results in the discovery that the delay was intentional, Petitioner must notify the Office.

Telephone inquiries **regarding this decision** should be directed to the undersigned at (571) 272-3225.[3] All other inquiries concerning examination procedures or status of the application should be directed to the Technology Center.

/Paul Shanoski/
Paul Shanoski
Senior Attorney
Office of Petitions

Encl. Communication Regarding Rescission of Nonpublication Request and/or Notice of Foreign Filing

cc: Lucian Wayne Beavers
Waddey & Patterson
1600 Division Street, Suite 500
Nashville, TN 37203

2 See 37 C.F.R. § 10.18(b); cf. Changes to Patent Practice and Procedure; Final Rule Notice, 62 Fed. Reg. 53131, 53178 (October 10, 1997), 1203 Off. Gaz. Pat. Office 63, 103 (October 21, 1997).
3 Petitioner will note that all practice before the Office should be in writing, and the action of the Office will be based exclusively on the written record in the Office. See 37 C.F.R. § 1.2. As such, Petitioner is reminded that no telephone discussion may be controlling or considered authority for any further action(s) of Petitioner.

UNITED STATES PATENT AND TRADEMARK OFFICE

UNITED STATES DEPARTMENT OF COMMERCE
United States Patent and Trademark Office
Address: COMMISSIONER FOR PATENTS
P.O. Box 1450
Alexandria, Virginia 22313-1450
www.uspto.gov

WOLF GREENFIELD & SACKS, P.C.
600 ATLANTIC AVENUE
BOSTON, MA 02210-2206

Mail Date: 04/21/2010

Applicant	: Christoph Jonischkeit	: DECISION ON REQUEST FOR
Patent Number	: 7591499	: RECALCULATION of PATENT
Issue Date	: 09/22/2009	: TERM ADJUSTMENT IN VIEW
Appliction No	: 11/412,711	: OF WYETH AND NOTICE OF INTENT TO
Filed	: 04/27/2006	: ISSUE CERTIFICATE OF CORRECTION
		:

The Request for Recalculation is **GRANTED** to the extent indicated.

The patent term adjustment has been determined to be **619** days. The USPTO will *sua sponte* issue a certificate of correction reflecting the amount of PTA days determined by the recalculation.

Prior to the issuance of the certificate of correction, the USPTO will afford patentee an opportunity to be heard and request reconsideration. Accordingly, patentee has **one month or thirty (30) days**, whichever is longer, to file a request for reconsideration of this patent term adjustment calculation. See 35 U.S.C. 154(b)(3)(B)(ii) and 37 CFR 1.322(a)(4). No extensions of time will be granted under 37 CFR 1.136.

Patentee should use document code PET.OP if electronically filing a request for reconsideration of this patent term adjustment calculation. The patentee must also include the information required by 37 CFR 1.705(b)(2) and the fee required by 37 CFR 1.18(e). If patentee does not file a timely request for reconsideration of this patent term adjustment calculation including the information required by 37 CFR 1.705(b)(2) and the fee required by 37 CFR 1.18(e), the USPTO will issue a certificate of correction reflecting the PTA determination noted above.

Patentee should be aware that in order to preserve the right to review in the United States District Court for the District of Columbia of the USPTO patent term adjustment determination, patentee must ensure that he or she also take the steps required under 35 U.S.C. 154(b)(4)(A) in a timely manner. Nothing in the request for recalculation should be construed as providing an alternative time frame for commencing a civil action under 35 U.S.C. 154(b)(4)(A).

Any questions concerning this decision should be directed to the Office of Patent Legal Administration at 571-272-7702.

UNITED STATES PATENT AND TRADEMARK OFFICE

Commissioner for Patents
United States Patent and Trademark Office
P.O. Box 1450
Alexandria, VA 22313-1450
www.uspto.gov

HONEYWELL INTERNATIONAL INC.
101 COLUMBIA ROAD
P O BOX 2245
MORRISTOWN NJ 07962-2245

COPY MAILED
DEC 29 2006
OFFICE OF PETITIONS

In re Application of :
Keyser et al. :
Application No. 11/412,738 : ON PETITION
Filed: April 26, 2006 :
Attorney Docket No. H0011828-5866 :

This is a decision on the petition filed July 19, 2006, requesting that the above-identified application be accorded a filing date of April 26, 2006, rather than the presently accorded date of April 27, 2006. The petition is properly treated as a petition under 37 CFR 1.10(c).

Applicant requests the earlier filing date on the basis that the application was purportedly deposited with the U.S. Postal Service (USPS) as Express Mail on April 26, 2006, pursuant to 37 CFR 1.10. In support, applicant has submitted a copy of Express Mail label No. EV 839409358 US, showing a handwritten "date-in" of "April 26, 2006." Applicant has submitted a copy of a postal service sales receipt, which shows Express Mail label No. EV 839409358 US, as having a receipt date of April 26, 2006, and a Track & Confirm record showing that the package in question was accepted on April 26, 2006, at 4:55 p.m. at the Chicago, IL USPS. The same Express Mail receipt number appears on the original "Utility Patent Application Transmittal."

In view of the above evidence, it is concluded that the application was deposited as "Express Mail" with the USPS on April 26, 2006.

The petition is **GRANTED**.

A petition under 37 CFR 1.10(c) does not require a petition fee and none has been charged.

This matter is being referred to the Office of Initial Patent Examination Division for further **processing with a filing date of April 26, 2006, along with a corrected filing receipt.** Thereafter, this matter is referred to Technology Center 2800 for examination in due course.

Telephone inquiries concerning this matter may be directed Petitions Examiner Liana Walsh at (571) 272-3206.

Frances Hicks
Petitions Examiner
Office of Petitions

UNITED STATES PATENT AND TRADEMARK OFFICE

UNITED STATES DEPARTMENT OF COMMERCE
United States Patent and Trademark Office
Address: COMMISSIONER FOR PATENTS
P.O. Box 1450
Alexandria, Virginia 22313-1450
www.uspto.gov

NIXON PEABODY LLP
300 S. Riverside Plaza
16th Floor
CHICAGO, IL 60606

Mail Date: 04/21/2010

Applicant	: James M. Rasmussen	: DECISION ON REQUEST FOR
Patent Number	: 7594852	: RECALCULATION of PATENT
Issue Date	: 09/29/2009	: TERM ADJUSTMENT IN VIEW
Appliction No	: 11/412,741	: OF WYETH AND NOTICE OF INTENT TO
Filed	: 04/27/2006	: ISSUE CERTIFICATE OF CORRECTION
		:

The Request for Recalculation is **GRANTED** to the extent indicated.

The patent term adjustment has been determined to be **563** days. The USPTO will *sua sponte* issue a certificate of correction reflecting the amount of PTA days determined by the recalculation.

Prior to the issuance of the certificate of correction, the USPTO will afford patentee an opportunity to be heard and request reconsideration. Accordingly, patentee has **one month or thirty (30) days**, whichever is longer, to file a request for reconsideration of this patent term adjustment calculation. See 35 U.S.C. 154(b)(3)(B)(ii) and 37 CFR 1.322(a)(4). No extensions of time will be granted under 37 CFR 1.136.

Patentee should use document code PET.OP if electronically filing a request for reconsideration of this patent term adjustment calculation. The patentee must also include the information required by 37 CFR 1.705(b)(2) and the fee required by 37 CFR 1.18(e). If patentee does not file a timely request for reconsideration of this patent term adjustment calculation including the information required by 37 CFR 1.705(b)(2) and the fee required by 37 CFR 1.18(e), the USPTO will issue a certificate of correction reflecting the PTA determination noted above.

Patentee should be aware that in order to preserve the right to review in the United States District Court for the District of Columbia of the USPTO patent term adjustment determination, patentee must ensure that he or she also take the steps required under 35 U.S.C. 154(b)(4)(A) in a timely manner. Nothing in the request for recalculation should be construed as providing an alternative time frame for commencing a civil action under 35 U.S.C. 154(b)(4)(A).

Any questions concerning this decision should be directed to the Office of Patent Legal Administration at 571-272-7702.

UNITED STATES PATENT AND TRADEMARK OFFICE

Commissioner for Patents
United States Patent and Trademark Office
P.O. Box 1450
Alexandria, VA 22313-1450
www.uspto.gov

Townsend and Townsend and Crew, LLP
Two Embarcadero Center
Eighth Floor
San Francisco, CA 94111-3834

COPY MAILED

MAR 14 2008

OFFICE OF PETITIONS

In re Application of :
James F. Zucherman et al. :
Application No. 11/412,742 : DECISION ON PETITION
Filed: April 27, 2006 : TO WITHDRAW
Attorney Docket No. 5910-174 : FROM RECORD
:

This is a decision on the Request to Withdraw as attorney or agent of record under 37 C.F.R. § 1.36(b), filed November 14, 2007.

The request is **NOT APPROVED** as moot.

A review of the file record indicates that the power of attorney to Townsend and Townsend and Crew, LLP has been revoked by the assignee of the patent application on December 13, 2007. Accordingly, the request to withdraw under 37 C.F.R. § 1.36(b) is moot.

All future communications from the Office will continue to be **directed to the below-listed address until otherwise notified by applicant.**

Telephone inquires concerning this decision should be directed to Terri Williams at 571-272-2991.

T. Williams

Terri Williams
Petitions Examiner
Office of Petitions

cc: **Coats & Bennett/Medtronics**
1400 Crescent Green
Suite 300
Cary, NC 27518

UNITED STATES PATENT AND TRADEMARK OFFICE

Commissioner for Patents
United States Patent and Trademark Office
P.O. Box 1450
Alexandria, VA 22313-1450
www.uspto.gov

STAAS & HALSEY LLP
SUITE 700
1201 NEW YORK AVENUE NW
WASHINGTON, DC 20005

COPY MAILED

AUG 27 2007

OFFICE OF PETITIONS

In re Application of :
Fumihiko Nakazawa et al :
Application No. 11/412,779 : DECISION GRANTING PETITION
Filed: April 28, 2006 : UNDER 37 CFR 1.313(c)(2)
Attorney Docket No. 1466.1122 :

This is a decision on the petition, filed August 24, 2007, under 37 CFR 1.313(c)(2) to withdraw the above-identified application from issue after payment of the issue fee.

The petition is **GRANTED**.

The above-identified application is withdrawn from issue for consideration of a submission under 37 CFR 1.114 (request for continued examination). See 37 CFR 1.313(c)(2).

Petitioner is advised that the issue fee paid on July 24, 2007 in the above-identified application cannot be refunded. If, however, the above-identified application is again allowed, petitioner may request that it be applied towards the issue fee required by the new Notice of Allowance.[1]

Telephone inquiries should be directed to the undersigned at (571) 272-3218.

This matter is being referred to Technology Center AU 2856 for processing of the request for continued examination under 37 CFR 1.114 and for consideration of the Information Disclosure Statement.

Frances Hicks
Petitions Examiner
Office of Petitions

C:\Documents and Settings\fhicks\My Documents\470\aug10\412779.wpd

---

[1] *The request to apply the issue fee to the new Notice may be satisfied by completing and returning the new Part B – Fee(s) Transmittal Form (along with any balance due at the time of submission). Petitioner is advised that the Issue Fee Transmittal Form **must** be completed and timely submitted to avoid abandonment.*

UNITED STATES PATENT AND TRADEMARK OFFICE

Commissioner for Patents
United States Patent and Trademark Office
P.O. Box 1450
Alexandria, VA 22313-1450
www.uspto.gov

GREENBLUM & BERNSTEIN, P.L.C.
1950 ROLAND CLARKE PLACE
RESTON VA 20191

COPY MAILED

JAN 31 2007

OFFICE OF PETITIONS

In re Application of :
JONES, Stephen H. :
Application No. 11/412,786 : DECISION ON PETITION
Filed: April 28, 2006 : TO MAKE SPECIAL UNDER
Attorney Docket No. P28375 : 37 CFR 1.102(c)(1)
:

This is a decision on the petition under 37 CFR 1.102(c)(1), filed April 28, 2006, to make the above-identified application special based on applicant's age as set forth in M.P.E.P. § 708.02, Section IV.

The petition is **GRANTED**.

A grantable petition to make an application special under 37 CFR 1.102(c)(1) and MPEP § 708.02, Section IV: Applicant's Age, must be accompanied by evidence showing that at least one of the applicants is 65 years of age, or more, such as a birth certificate or a statement by applicant. No fee is required.

The instant petition includes the statement from inventor Walter P. Kistler, attesting to his age. Accordingly, the above-identified application has been accorded "special" status.

Telephone inquiries concerning this decision should be directed to the undersigned at 571-272-7253.

All other inquiries concerning either the examination or status of the application should be directed to the Technology Center.

The application is being forwarded to the Technology Center Art Unit 3753 for action on the merits commensurate with this decision.

Monica A. Graves
Petitions Examiner
Office of Petitions

UNITED STATES PATENT AND TRADEMARK OFFICE

UNITED STATES DEPARTMENT OF COMMERCE
United States Patent and Trademark Office
Address: COMMISSIONER FOR PATENTS
P.O. Box 1450
Alexandria, Virginia 22313-1450
www.uspto.gov

BRINKS HOFER GILSON & LIONE
P.O. BOX 10395
CHICAGO, IL 60610

Mail Date: 04/21/2010

Applicant	: Dae San Lim	: DECISION ON REQUEST FOR
Patent Number	: 7651234	: RECALCULATION of PATENT
Issue Date	: 01/26/2010	: TERM ADJUSTMENT IN VIEW
Appliction No	: 11/412,801	: OF WYETH AND NOTICE OF INTENT TO
Filed	: 04/27/2006	: ISSUE CERTIFICATE OF CORRECTION
		:

The Request for Recalculation is **GRANTED** to the extent indicated.

The patent term adjustment has been determined to be **186** days. The USPTO will *sua sponte* issue a certificate of correction reflecting the amount of PTA days determined by the recalculation.

Prior to the issuance of the certificate of correction, the USPTO will afford patentee an opportunity to be heard and request reconsideration. Accordingly, patentee has **one month or thirty (30) days**, whichever is longer, to file a request for reconsideration of this patent term adjustment calculation. See 35 U.S.C. 154(b)(3)(B)(ii) and 37 CFR 1.322(a)(4). No extensions of time will be granted under 37 CFR 1.136.

Patentee should use document code PET.OP if electronically filing a request for reconsideration of this patent term adjustment calculation. The patentee must also include the information required by 37 CFR 1.705(b)(2) and the fee required by 37 CFR 1.18(e). If patentee does not file a timely request for reconsideration of this patent term adjustment calculation including the information required by 37 CFR 1.705(b)(2) and the fee required by 37 CFR 1.18(e), the USPTO will issue a certificate of correction reflecting the PTA determination noted above.

Patentee should be aware that in order to preserve the right to review in the United States District Court for the District of Columbia of the USPTO patent term adjustment determination, patentee must ensure that he or she also take the steps required under 35 U.S.C. 154(b)(4)(A) in a timely manner. Nothing in the request for recalculation should be construed as providing an alternative time frame for commencing a civil action under 35 U.S.C. 154(b)(4)(A).

Any questions concerning this decision should be directed to the Office of Patent Legal Administration at 571-272-7702.

UNITED STATES PATENT AND TRADEMARK OFFICE

UNITED STATES DEPARTMENT OF COMMERCE
United States Patent and Trademark Office
Address: COMMISSIONER FOR PATENTS
P.O. Box 1450
Alexandria, Virginia 22313-1450
www.uspto.gov

O'KEEFE, EGAN, PETERMAN & ENDERS LLP
1101 CAPITAL OF TEXAS HIGHWAY SOUTH
#C200
AUSTIN, TX 78746

Mail Date: 04/21/2010

Applicant	: Sverrir Olafsson	: DECISION ON REQUEST FOR
Patent Number	: 7634070	: RECALCULATION of PATENT
Issue Date	: 12/15/2009	: TERM ADJUSTMENT IN VIEW
Appliction No	: 11/412,809	: OF WYETH AND NOTICE OF INTENT TO
Filed	: 04/27/2006	: ISSUE CERTIFICATE OF CORRECTION
		:

The Request for Recalculation is **GRANTED** to the extent indicated.

The patent term adjustment has been determined to be **902** days. The USPTO will *sua sponte* issue a certificate of correction reflecting the amount of PTA days determined by the recalculation.

Prior to the issuance of the certificate of correction, the USPTO will afford patentee an opportunity to be heard and request reconsideration. Accordingly, patentee has **one month or thirty (30) days**, whichever is longer, to file a request for reconsideration of this patent term adjustment calculation. See 35 U.S.C. 154(b)(3)(B)(ii) and 37 CFR 1.322(a)(4). No extensions of time will be granted under 37 CFR 1.136.

Patentee should use document code PET.OP if electronically filing a request for reconsideration of this patent term adjustment calculation. The patentee must also include the information required by 37 CFR 1.705(b)(2) and the fee required by 37 CFR 1.18(e). If patentee does not file a timely request for reconsideration of this patent term adjustment calculation including the information required by 37 CFR 1.705(b)(2) and the fee required by 37 CFR 1.18(e), the USPTO will issue a certificate of correction reflecting the PTA determination noted above.

Patentee should be aware that in order to preserve the right to review in the United States District Court for the District of Columbia of the USPTO patent term adjustment determination, patentee must ensure that he or she also take the steps required under 35 U.S.C. 154(b)(4)(A) in a timely manner. Nothing in the request for recalculation should be construed as providing an alternative time frame for commencing a civil action under 35 U.S.C. 154(b)(4)(A).

Any questions concerning this decision should be directed to the Office of Patent Legal Administration at 571-272-7702.

UNITED STATES PATENT AND TRADEMARK OFFICE

Commissioner for Patents
United States Patent and Trademark Office
P.O. Box 1450
Alexandria, VA 22313-1450
www.uspto.gov

BUCHANAN, INGERSOLL & ROONEY PC
POST OFFICE BOX 1404
ALEXANDRIA VA 22313-1404

COPY MAILED

JUN 0 8 2007

OFFICE OF PETITIONS

In re Application of
McKinnon et al.
Application No. 11/412,841
Filed: 04-28-2006
Attorney Docket No. 3673
Title: Flame resistant matelasse fabrics

ON PETITION

This is in response to the petition under 37 CFR 1.47(a), filed December 14, 2006.

The petition is **GRANTED.**

Petitioner has shown that the non-signing inventors have refused to join in the filing of the above-identified application.

The application and papers have been reviewed and found in compliance with 37 CFR 1.47(a). This application is hereby accorded Rule 1.47(a) status.

As provided in 37 CFR 1.47(c), this Office will forward notice of this application's filing to the non-signing inventors at the addresses given in the petition. Notice of the filing of this application will also be published in the Official Gazette.

This application is being referred to the Office of Initial Patent Examination for pre-examination processing.

Telephone inquiries regarding this decision should be directed to the undersigned at (571) 272-3211.

C. T. Donnell

Christina Tartera Donnell
Senior Petitions Attorney
Office of Petitions

UNITED STATES PATENT AND TRADEMARK OFFICE

Commissioner for Patents
United States Patent and Trademark Office
P.O. Box 1450
Alexandria, VA 22313-1450
www.uspto.gov

COPY MAILED

JUN 0 8 2007

OFFICE OF PETITIONS

Mike Cook
1202 Hamford Road
Grahm NC 27253

In re Application of :
McKinnon et al. :
Application No. 11/412,841 : ON PETITION
Filed: 04-28-2006 :
Attorney Docket No. 3673 :
Title: Flame resistant matelasse fabrics :

Dear Mr. Cook:

You are named as a joint inventor in the above-identified United States patent application, filed under the provisions of 35 U.S.C. 116 (United States Code), and 37 CFR 1.47(a), Rules of Practice in Patent Cases. Should a patent be granted on the application you will be designated therein as a joint inventor.

As a named inventor you are entitled to inspect any paper in the file wrapper of the application, order copies of all or any part thereof (at a prepaid cost per 37 CFR 1.19) or make your position of record in the application. Alternatively, you may arrange to do any of the preceding through a registered patent attorney or agent presenting written authorization from you. If you care to join the application, counsel of record (see below) would presumably assist you. Joining the application would entail the filing of an appropriate oath or declaration by you pursuant to 37 CFR 1.63.

Requests for information regarding your application should be directed to the File Information Unit at (703) 308-2733. Information regarding how to pay for and order a copy of the application, or a specific paper in the application, should be directed to the Certification Division at (571) 272-3150 or 1 (800) 972-6382 (outside the Washington, DC area).

Christina T. Donnell

Christina Tartera Donnell
Senior Petitions Attorney
Office of Petitions

cc: BUCHANAN, INGERSOLL & ROONEY PC
POST OFFICE BOX 1404
ALEXANDRIA VA 22313-1404

UNITED STATES PATENT AND TRADEMARK OFFICE

Commissioner for Patents
United States Patent and Trademark Office
P.O. Box 1450
Alexandria, VA 22313-1450
www.uspto.gov

COPY MAILED

JUN 0 8 2007

OFFICE OF PETITIONS

Nathan Dry
369 Raeford Road
Angier NC 27507

In re Application of
McKinnon et al.
Application No. 11/412,841
Filed: 04-28-2006
Attorney Docket No. 3673
Title: Flame resistant matelasse fabrics

ON PETITION

Dear Mr. Dry:

You are named as a joint inventor in the above-identified United States patent application, filed under the provisions of 35 U.S.C. 116 (United States Code), and 37 CFR 1.47(a), Rules of Practice in Patent Cases. Should a patent be granted on the application you will be designated therein as a joint inventor.

As a named inventor you are entitled to inspect any paper in the file wrapper of the application, order copies of all or any part thereof (at a prepaid cost per 37 CFR 1.19) or make your position of record in the application. Alternatively, you may arrange to do any of the preceding through a registered patent attorney or agent presenting written authorization from you. If you care to join the application, counsel of record (see below) would presumably assist you. Joining the application would entail the filing of an appropriate oath or declaration by you pursuant to 37 CFR 1.63.

Requests for information regarding your application should be directed to the File Information Unit at (703) 308-2733. Information regarding how to pay for and order a copy of the application, or a specific paper in the application, should be directed to the Certification Division at (571) 272-3150 or 1 (800) 972-6382 (outside the Washington, DC area).

C. T. Donnell

Christina Tartera Donnell
Senior Petitions Attorney
Office of Petitions

cc: BUCHANAN, INGERSOLL & ROONEY PC
POST OFFICE BOX 1404
ALEXANDRIA VA 22313-1404

UNITED STATES PATENT AND TRADEMARK OFFICE

Commissioner for Patents
United States Patent and Trademark Office
P.O. Box 1450
Alexandria, VA 22313-1450
www.uspto.gov

MOTOROLA INC
600 NORTH US HIGHWAY 45
W4 - 39Q
LIBERTYVILLE, IL 60048-5343

COPY MAILED
JAN 22 2010

In re Application of	:	
Marcel Korndewal, et al.	:	
Application No. 11/412,845	:	DECISION GRANTING PETITION
Filed: April 27, 2006	:	UNDER 37 CFR 1.313(c)(2)
Attorney Docket No. CS28346P	:	

This is a decision on the petition under 37 CFR 1.313(c)(2), filed January 19, 2010 and supplemented January 21, 2010, to withdraw the above-identified application from issue after payment of the issue fee.

The petition is **GRANTED**.

The above-identified application is withdrawn from issue for consideration of a submission under 37 CFR 1.114 (request for continued examination). *See* 37 CFR 1.313(c)(2).

Petitioner is advised that the issue fee paid on January 4, 2010 cannot be refunded. If, however, this application is again allowed, petitioner may request that it be applied towards the issue fee required by the new Notice of Allowance.[1]

Telephone inquiries regarding this decision should be directed to undersigned at (571) 272-1642. All other inquiries concerning the examination or status of this application should be directed to the Technology Center.

This application is being referred to Technology Center AU 2112 for processing of the request for continued examination under 37 CFR 1.114 and for consideration of the concurrently filed information disclosure statement.

/AMW/
April M. Wise
Petitions Examiner
Office of Petitions

[1] *The request to apply the issue fee to the new Notice may be satisfied by completing and returning the new Part B – Fee(s) Transmittal Form (along with any balance due at the time of submission). Petitioner is advised that the Issue Fee Transmittal Form must be completed and timely submitted to avoid abandonment of the application.*

UNITED STATES PATENT AND TRADEMARK OFFICE

COMMISSIONER FOR PATENTS
UNITED STATES PATENT AND TRADEMARK OFFICE
P.O. BOX 1450
ALEXANDRIA, VA 22313-1450
WWW.USPTO.GOV

Paper No. None

DAVIDSON BERQUIST JACKSON & GOWDEY LLP
4300 WILSON BLVD., 7TH FLOOR
ARLINGTON VA 22203

COPY MAILED
AUG 22 2006
OFFICE OF PETITIONS

In re Application of :
Danielle Perazzolo :
Application No. 11/412,863 :
Filed: April 28, 2006 : DECISION ON PETITION UNDER
Attorney Docket No. 2675-0004 : 37 C.F.R. §1.53
Title: SYSTEM AND METHOD FOR :
ACTIVE DATA PROTECTION IN A :
COMPUTER SYSTEM IN RESPONSE TO A :
REQUEST TO ACCESS TO A RESOURCE :
OF THE COMPUTER SYSTEM

This is a decision on the petition filed May 22, 2006.

On April 28, 2006, the above-identified application was deposited. On May 8, 2006, the Office of Initial Patent Examination (OIPE) mailed a "Notice of Incomplete Nonprovisional Application - Filing Date Not Granted (notice)", stating that the application had not been accorded a filing date, and advising applicants that a filing date would be accorded upon the receipt of drawings. The Notice set a two-month period for response, and further indicated that an oath or declaration, an English translation and the associated fee, the search fee, and the examination fee would be required.

On May 22, 2006, Petitioner submitted the present petition under 37 C.F.R. §1.53. The petition is further accompanied by the petition fee and a copy of four sheets of drawings containing

Figures one through three, four-a, and four-b, along with a copy of applicants' postcard receipt acknowledging receipt of "4 sheets of drawings (Figures 1-3, 4a-4b)" in the United States Patent and Trademark Office (Office) on April 28, 2006. Applicants request that the application, including Figures one through three, four-a, and four-b, be accorded a filing date of April 28, 2006.

Upon review of the electronic record, the above-mentioned figures have not been located among the application papers. However, the evidence is convincing that the application papers deposited on April 28, 2006 included four sheets of drawings containing Figures one through three, four-a, and four-b, and each of the four sheets containing these figures was subsequently misplaced in the Office.

Therefore, the application, including Figures one through three, four-a, and four-b, was complete on filing and entitled to a filing date of April 28, 2006 as part of the original disclosure.

Accordingly, the petition is **GRANTED**.

The portion of the notice which referred to the missing drawings, mailed May 8, 2006, was sent in error, and is hereby **VACATED**. Therefore, no petition fee is necessary. The petition fee has been applied towards the outstanding charges which are required - the $250 search fee and the $100 examination fee. The remaining $50 has been credited to Petitioner's Deposit Account, as authorized in the petition.

OIPE will be notified of this decision so that this application may receive further processing with a filing date of April 28, 2006, using the original application papers filed on that date, as well as the four sheets of drawings submitted on May 22, 2006, and for noting in Office records that these four sheets were present on filing.

It is noted in passing that it does not appear that Petitioner has submitted an executed oath or declaration, the fee associated with the late submission of the same, an English translation, or the fee associated with the late submission of the same. Petitioner is reminded that these requirements were set forth in the notice of May 8, 2006, and Petitioner risks the abandonment of this application if they are not proffered in a timely manner.

Telephone inquiries regarding *this decision* should be directed to the undersigned at (571) 272-3225[1]. All other inquiries concerning examination procedures or status of the application should be directed to the Technology Center.

Paul Shanoski
Senior Attorney
Office of Petitions
United States Patent and Trademark Office

1 Petitioner will note that all practice before the Office should be in writing, and the action of the Office will be based exclusively on the written record in the Office. See 37 C.F.R. §1.2. As such, Petitioner is reminded that no telephone discussion may be controlling or considered authority for Petitioner's further action(s).

UNITED STATES PATENT AND TRADEMARK OFFICE

COMMISSIONER FOR PATENTS
UNITED STATES PATENT AND TRADEMARK OFFICE
P.O. BOX 1450
ALEXANDRIA, VA 22313-1450
www.uspto.gov

Paper No.

CATALINA MARKETING CORPORATION
200 CARILLON PARKWAY
LEGAL DEPARTMENT
ST. PETERSBURG FL 33716

MAILED

JUL 01 2010

OFFICE OF PETITIONS

In re Application of :
Greenfield et al. :
Application No. 11/412,903 : ON APPLICATION FOR
Filed: April 28, 2006 : PATENT TERM ADJUSTMENT
Atty Docket No. PIP170GREEU-US :
Title: DATA STRUCTURE AND ARCHITECTURE FOR PROCESSING TRANSACTION DATA :

This is in response to the "37 CFR 1.705 APPLICATION FOR PATENT TERM ADJUSTMENT," filed May 20, 2010. Applicant submits that the correct patent term adjustment to be indicated on the patent is one thousand and twenty-three (1023) days, not eight hundred and twenty-five (825) days as calculated by the Office as of the mailing of the initial determination of patent term adjustment. Applicant requests this correction solely on the basis that the Office will take in excess of three years to issue this patent.

As the instant application for patent term adjustment requests reconsideration of the patent term adjustment as it relates to the Office's failure to issue the patent within 3 years of the filing date, the application for patent term adjustment under 37 CFR 1.705(b) is **DISMISSED as PREMATURE**.

Knowledge of the actual date the patent issues is required to calculate the amount, if any, of additional patent term patentee is entitled to for Office failure to issue the patent within 3 years. See § 1.702(b). (This is true even where a request for continued examination (RCE) was filed). The computer will not undertake the § 1.702(b) calculation until the actual date of issuance of the patent has been determined. Likewise, the computer will not calculate any further Office delay under

§ 1.702(a)(4) or applicant delay under § 1.704(c)(10) until the actual date of issuance of the patent has been determined. As such, the Office cannot make a determination on the correctness of the patent term adjustment until the patent has issued.

Requesting reconsideration of the patent term adjustment to be indicated on the patent under 37 CFR 1.705(b) based on the initial determination of patent term adjustment and a projected issuance date of the patent (or even the filing date of the request for continued examination) is premature. Accordingly, it is appropriate to dismiss as premature such a request.

Rather than file an application for patent term adjustment under 37 CFR 1.705(b) contesting the 37 CFR 1.702(b) calculation at the time of the mailing of the notice of allowance, applicant is advised that they may wait until the time of the issuance of the patent and file a request for reconsideration of the patent term adjustment pursuant to 37 CFR 1.705(d). As the USPTO does not calculate the amount of time earned pursuant to 37 CFR 1.702(b) until the time of the issuance of the patent, the Office will consider any request for reconsideration of the patent term adjustment due to an error in the calculation of 37 CFR 1.702(b) to be timely if the request for reconsideration is filed within two months of the issuance of the patent. However, as to all other bases for contesting the initial determination of patent term adjustment received with the notice of allowance, applicant must timely file an application for patent term adjustment prior to the payment of the issue fee.[1]

The Office acknowledges submission of the $200.00 fee set forth in 37 CFR 1.18(e). No additional fees are required.

Any request for reconsideration of the patent term adjustment indicated on the patent must be timely filed within 2 months

---

[1] For example, if applicant disputes both the calculation of patent term adjustment under 37 CFR 1.702(a)(1) for Office failure to mail a first Office action or notice of allowance not later than fourteen months after the date on which the application was filed and under 37 CFR 1.702(b) for Office failure to issue a patent within three years of the actual filing date of the application, then applicant must still timely file an application for patent term adjustment prior to the payment of the issue fee to contest the calculation of Office delay in issuing a first Office action or notice of allowance. See 37 CFR 1.705(b) and 35 U.S.C. 154(b)(3)(B). A dispute as to the calculation of the § 1.702(a)(1) period raised on request for reconsideration of patent term adjustment under 37 CFR 1.705(d) will be dismissed as untimely filed.

after issuance pursuant to 37 CFR 1.705(d) and must include payment of the required fee under 37 CFR 1.18(e).

The Office of Data Management has been advised of this decision. This application is being referred to the Office of Data Management for issuance of the patent.

Telephone inquiries regarding this decision should be directed to Senior Attorney Paul Shanoski at (571) 272-3225.

Nancy Johnson
Senior Petitions Attorney
Office of Petitions

UNITED STATES PATENT AND TRADEMARK OFFICE

Commissioner for Patents
United States Patent and Trademark Office
P.O. Box 1450
Alexandria, VA 22313-1450
www.uspto.gov

Paper No.

CATALINA MARKETING CORPORATION
200 CARILLON PARKWAY
LEGAL DEPARTMENT
ST. PETERSBURG FL 33716

MAILED

JUL 22 2010

OFFICE OF PETITIONS

In re Application of :
Greenfield et al. :
Application No. 11/412,903 : ON APPLICATION FOR
Filed: April 28, 2006 : PATENT TERM ADJUSTMENT
Atty Docket No. PIP170GREEU-US :
Title: DATA STRUCTURE AND ARCHITECTURE FOR PROCESSING TRANSACTION DATA :

This is in response to the "REQEUST FOR RECONSIDERATION OF 37 CFR 1.705 APPLICATION FOR PATENT TERM ADJUSTMENT," filed on July 6, 2010.

On May 20, 2010, Applicant submitted a request entitled "37 CFR 1.705 APPLICATION FOR PATENT TERM ADJUSTMENT," where it was submitted that the correct patent term adjustment to be indicated on the patent is one thousand and twenty-three (1023) days, not eight hundred and twenty-five (825) days as calculated by the Office as of the mailing of the initial determination of patent term adjustment. Applicant requested this correction solely on the basis that the Office will take in excess of three years to issue this patent.

The submission of May 20, 2010 was dismissed as premature via the mailing of a decision on July 1, 2010.

With this renewed, petition, Applicant has asserted "the PTO is...required to decide the application (sic)." However, the matter of the Office's failure to issue this patent within three years is not ripe for review until the patent issues. Since the instant application for patent term adjustment requests reconsideration of the patent term adjustment as it relates to the Office's failure to issue the patent within 3 years of the

filing date, the application for patent term adjustment under 37 CFR 1.705(b) is **DISMISSED as PREMATURE**.

Knowledge of the actual date the patent issues is required to calculate the amount, if any, of additional patent term patentee is entitled to for Office failure to issue the patent within 3 years. See § 1.702(b). (This is true even where a request for continued examination (RCE) was filed). The computer will not undertake the § 1.702(b) calculation until the actual date of issuance of the patent has been determined. Likewise, the computer will not calculate any further Office delay under § 1.702(a)(4) or applicant delay under § 1.704(c)(10) until the actual date of issuance of the patent has been determined. As such, the Office cannot make a determination on the correctness of the patent term adjustment until the patent has issued.

Requesting reconsideration of the patent term adjustment to be indicated on the patent under 37 CFR 1.705(b) based on the initial determination of patent term adjustment and a projected issuance date of the patent (or even the filing date of the request for continued examination) is premature. Accordingly, it is appropriate to dismiss as premature such a request.

Rather than file an application for patent term adjustment under 37 CFR 1.705(b) contesting the 37 CFR 1.702(b) calculation at the time of the mailing of the notice of allowance, applicant is advised that they may wait until the time of the issuance of the patent and file a request for reconsideration of the patent term adjustment pursuant to 37 CFR 1.705(d). As the USPTO does not calculate the amount of time earned pursuant to 37 CFR 1.702(b) until the time of the issuance of the patent, the Office will consider any request for reconsideration of the patent term adjustment due to an error in the calculation of 37 CFR 1.702(b) to be timely if the request for reconsideration is filed within two months of the issuance of the patent. However, as to all other bases for contesting the initial determination of patent term adjustment received with the notice of allowance, applicant must timely file an application for patent term adjustment prior to the payment of the issue fee.[1]

---

[1] For example, if applicant disputes both the calculation of patent term adjustment under 37 CFR 1.702(a)(1) for Office failure to mail a first Office action or notice of allowance not later than fourteen months after the date on which the application was filed and under 37 CFR 1.702(b) for Office failure to issue a patent within three years of the actual filing date of the application, then applicant must still timely file an application for patent

This practice, including an explanation of the absence of the 1.702(b) calculation in the initial determination of patent term adjustment mailed with the notice of allowance, was recently included in an OG Notice as follows:

> An applicant seeking a revised patent term adjustment determination based upon the three-year pendency provision must submit a timely request for reconsideration of the patent term adjustment indicated in the patent. The USPTO does not calculate and inform the applicant of the patent term adjustment based upon the three-year pendency provision of 35 U.S.C. § 154(b)(1)(B) in the notice of allowance because the USPTO must know the date the patent will issue to be able to calculate the patent term adjustment based upon this provision. Thus, reconsideration of the patent term adjustment indicated in the patent as it relates to the three-year pendency provision of 35 U.S.C. § 154(b)(1)(B) is not considered a matter that could have been raised in an application for patent term adjustment under 37 CFR 1.705(b) (provides for reconsideration of the patent term adjustment indicated in the notice of allowance). Therefore, a request for reconsideration of the patent term adjustment calculation based on the three-year pendency provision of 35 U.S.C. § 154(b)(1)(B) will be considered timely under 37 CFR 1.705(d) if filed within two months of the date the patent issued.

See *Notice Concerning Calculation of the Patent Term Adjustment under 35 U.S.C. § 154(b)(1)(B) involving International Applications Entering the National Stage Pursuant to 35 U.S.C* § *371*, 1347 OG 49 (October 6, 2009).

Any request for reconsideration of the patent term adjustment indicated on the patent must be timely filed within 2 months after issuance pursuant to 37 CFR 1.705(d) and must include payment of the required fee under 37 CFR 1.18(e).

---

term adjustment prior to the payment of the issue fee to contest the calculation of Office delay in issuing a first Office action or notice of allowance. See 37 CFR 1.705(b) and 35 U.S.C. 154(b)(3)(B). A dispute as to the calculation of the § 1.702(a)(1) period raised on request for reconsideration of patent term adjustment under 37 CFR 1.705(d) will be dismissed as untimely filed.

The Office of Data Management has been advised of this decision. This application is being referred to the Office of Data Management for issuance of the patent.

Telephone inquiries regarding this decision should be directed to Senior Attorney Paul Shanoski at (571) 272-3225.

Nancy Johnson
Senior Petitions Attorney
Office of Petitions

UNITED STATES PATENT AND TRADEMARK OFFICE

UNITED STATES DEPARTMENT OF COMMERCE
United States Patent and Trademark Office
Address: COMMISSIONER FOR PATENTS
P.O. Box 1450
Alexandria, Virginia 22313-1450
www.uspto.gov

FOLEY AND LARDNER LLP
SUITE 500
3000 K STREET NW
WASHINGTON, DC 20007

Mail Date: 04/21/2010

Applicant	: Tomoya Hosoda	: DECISION ON REQUEST FOR
Patent Number	: 7635726	: RECALCULATION of PATENT
Issue Date	: 12/22/2009	: TERM ADJUSTMENT IN VIEW
Appliction No	: 11/412,913	: OF WYETH AND NOTICE OF INTENT TO
Filed	: 04/28/2006	: ISSUE CERTIFICATE OF CORRECTION
		:

The Request for Recalculation is **GRANTED** to the extent indicated.

The patent term adjustment has been determined to be **427** days. The USPTO will *sua sponte* issue a certificate of correction reflecting the amount of PTA days determined by the recalculation.

Prior to the issuance of the certificate of correction, the USPTO will afford patentee an opportunity to be heard and request reconsideration. Accordingly, patentee has **one month or thirty (30) days**, whichever is longer, to file a request for reconsideration of this patent term adjustment calculation. See 35 U.S.C. 154(b)(3)(B)(ii) and 37 CFR 1.322(a)(4). No extensions of time will be granted under 37 CFR 1.136.

Patentee should use document code PET.OP if electronically filing a request for reconsideration of this patent term adjustment calculation. The patentee must also include the information required by 37 CFR 1.705(b)(2) and the fee required by 37 CFR 1.18(e). If patentee does not file a timely request for reconsideration of this patent term adjustment calculation including the information required by 37 CFR 1.705(b)(2) and the fee required by 37 CFR 1.18(e), the USPTO will issue a certificate of correction reflecting the PTA determination noted above.

Patentee should be aware that in order to preserve the right to review in the United States District Court for the District of Columbia of the USPTO patent term adjustment determination, patentee must ensure that he or she also take the steps required under 35 U.S.C. 154(b)(4)(A) in a timely manner. Nothing in the request for recalculation should be construed as providing an alternative time frame for commencing a civil action under 35 U.S.C. 154(b)(4)(A).

Any questions concerning this decision should be directed to the Office of Patent Legal Administration at 571-272-7702.

UNITED STATES PATENT AND TRADEMARK OFFICE

Commissioner for Patents
United States Patent and Trademark Office
P.O. Box 1450
Alexandria, VA 22313-1450
www.uspto.gov

BACON & THOMAS, PLLC
625 SLATERS LANE
FOURTH FLOOR
ALEXANDRIA VA 22314-1176

MAILED

OCT 28 2009

OFFICE OF PETITIONS

In re Application of	:	
Sahle-Demessie et al	:	
Application No. 11/412,940	:	DECISION GRANTING PETITION
Filed: April 28, 2006	:	UNDER 37 CFR 1.313(c)(2)
Attorney Docket No. SAHL3001	:	

This is a decision on the petition under 37 CFR 1.313(c)(2), filed October 27, 2009, to withdraw the above-identified application from issue after payment of the issue fee.

The petition is **GRANTED**.

The above-identified application is withdrawn from issue for consideration of a submission under 37 CFR 1.114 (request for continued examination). *See* 37 CFR 1.313(c)(2).

Petitioner is advised that the issue fee paid on September 25, 2009 cannot be refunded. If, however, this application is again allowed, petitioner may request that it be applied towards the issue fee required by the new Notice of Allowance.[1]

Telephone inquiries should be directed to the undersigned at (571) 272-3208.

This application is being referred to Technology Center AU 1795 for processing of the request for continued examination under 37 CFR 1.114 and for consideration of the concurrently filed IDS.

/Karen Creasy/
Karen Creasy
Petitions Examiner
Office of Petitions

---

[1] *The request to apply the issue fee to the new Notice may be satisfied by completing and returning the new Part B – Fee(s) Transmittal Form (along with any balance due at the time of submission). Petitioner is advised that the Issue Fee Transmittal Form* ***must*** *be completed and timely submitted to avoid abandonment of the application.*

UNITED STATES PATENT AND TRADEMARK OFFICE

UNITED STATES DEPARTMENT OF COMMERCE
United States Patent and Trademark Office
Address: COMMISSIONER FOR PATENTS
P.O. Box 1450
Alexandria, Virginia 22313-1450
www.uspto.gov

APPLICATION NO.	FILING DATE	FIRST NAMED INVENTOR	ATTORNEY DOCKET NO.	CONFIRMATION NO.
11/412,942	04/28/2006	Khurram Ali Rizvi	290540US2CRL	8840

7590 06/17/2009

OBLON, SPIVAK, MCCLELLAND MAIER & NEUSTADT, P.C.
1940 DUKE STREET
ALEXANDRIA, VA 22314

EXAMINER	
CHOO, MUNSOON	
ART UNIT	PAPER NUMBER
2617	
NOTIFICATION DATE	DELIVERY MODE
06/17/2009	ELECTRONIC

DECISION GRANTING PETITION UNDER 37 CFR 1.138(d)

The declaration of express abandonment is recognized

This is in response to the petition under 37 CFR 1.138(d), requesting for a refund of any previously paid search fee and excess claims fee in the above-identified application.

The petition is granted.

The express abandonment is recognized. Any previously paid search fee and excess claims fee are hereby refunded.

Telephone inquiries should be directed to the Office of Data Management at (571) 272-4200.

Betty Powell

Patent Publication Branch
Office of Data Management

Adjustment date: 06/16/2009 BPOWELL
05/01/2006 STEUMELI 00000088 11412942
02 FC:1111 -500.00 OP

Adjustment date: 06/16/2009 BPOWELL
05/01/2006 STEUMELI 00000088 11412942
02 FC:1111 -500.00 OP

Refund Ref:
06/16/2009 00300071264

Credit Card Refund Total: $500.00

Am Exp..: XXXXXXXXXXX1001

UNITED STATES PATENT AND TRADEMARK OFFICE

UNITED STATES DEPARTMENT OF COMMERCE
United States Patent and Trademark Office
Address: COMMISSIONER FOR PATENTS
P.O. Box 1450
Alexandria, Virginia 22313-1450
www.uspto.gov

APPLICATION NO.	FILING DATE	FIRST NAMED INVENTOR	ATTORNEY DOCKET NO.	CONFIRMATION NO.
11/412,965	04/28/2006	Cheran Malsri Vithanage	290546US2CRL	8835

7590 02/02/2009

OBLON, SPIVAK, MCCLELLAND MAIER & NEUSTADT, P.C.
1940 DUKE STREET
ALEXANDRIA, VA 22314

EXAMINER	
KIM, KEVIN	

ART UNIT	PAPER NUMBER
2611	

NOTIFICATION DATE	DELIVERY MODE
02/02/2009	ELECTRONIC

DECISION GRANTING PETITION UNDER 37 CFR 1.138(d)

The declaration of express abandonment is recognized

This is in response to the petition under 37 CFR 1.138(d), requesting for a refund of any previously paid search fee and excess claims fee in the above-identified application.

The petition is granted.

The express abandonment is recognized. Any previously paid search fee and excess claims fee are hereby refunded.

Telephone inquiries should be directed to the Office of Data Management at (571) 272-4200.

Nimi Farmer

Patent Publication Branch
Office of Data Management

Refund Ref:
02/04/2009 0030066279

Credit Card Refund Total: $500.00

Am Exp..: XXXXXXXXXXX1007

Adjustment date: 02/04/2009 NFARMER
05/01/2006 STEUMEL1 00000069 11412965
02 FC:1111 -500.00 OP

UNITED STATES PATENT AND TRADEMARK OFFICE

Commissioner for Patents
United States Patent and Trademark Office
P.O. Box 1450
Alexandria, VA 22313-1450
www.uspto.gov

JAGTIANI + GUTTAG
10363-A DEMOCRACY LANE
FAIRFAX VA 22030

COPY MAILED

JUN 0 3 2009

OFFICE OF PETITIONS

In re Application of	:	
Martin Post, et al.	:	
Application No. 11/412,975	:	DECISION ON PETITION
Filed: April 28, 2006	:	TO WITHDRAW
Attorney Docket No. HFSC-0001-UT1	:	FROM RECORD
	:	

This is a decision on the Request to Withdraw as attorney or agent of record under 37 C.F.R. § 1.36(b), filed November 10, 2008.

The request is **NOT APPROVED** because it is moot.

Steven B. Kelber, Registration No. 30,073 is no longer suspended to practice from practicing before the United States Patent and Trademark Office. He will remain the attorney of record of the above identified patent application.

All future communications from the Office will continue to be directed to the below-listed address until otherwise notified by applicant.

Telephone inquires concerning this decision should be directed to Terri Williams at 571-272-2991.

Terri Williams
Petitions Examiner
Office of Petitions

UNITED STATES PATENT AND TRADEMARK OFFICE

Commissioner for Patents
United States Patent and Trademark Office
P.O. Box 1450
Alexandria, VA 22313-1450
www.uspto.gov

FOLEY AND LARDNER LLP
SUITE 500
3000 K STREET NW
WASHINGTON DC 20007

COPY MAILED

SEP 26 2008

In re :
Patent No. 7,271,516 : DECISION ON PETITION
Issued: September 18, 2007 :
Application No. 11/412,999 :
Filed: April 28, 2006 :

This is a decision on the "PETITION UNDER 37 C.F.R. § 1.182 FOR A DUPLICATE PATENT GRANT", filed July 9, 2008, and the petition to expedite, filed July 31, 2008.

The petition under 37 CFR 1.182 is **GRANTED.**

The petition to expedite is **GRANTED.**

The Publishing Division is directed to issue a duplicate Letters Patent.

Any questions concerning this decision may be directed to the undersigned at (571)272-3207. Any questions concerning issuance of the duplicate Letters Patent should be directed to Niomi Farmer at (703)308-9250, extension 129.

A copy of this decision is being forwarded to the Publishing Division for issuance of a duplicate Letters patent.

Telephone inquiries concerning this decision may be directed to the undersigned at (571)272-3207.

Cliff Congo
Petitions Attorney
Office of Petitions

cc: Niomi Farmer, P/OPPD (FAX 571-270-9937)

UNITED STATES PATENT AND TRADEMARK OFFICE

UNITED STATES DEPARTMENT OF COMMERCE
United States Patent and Trademark Office
Address: COMMISSIONER FOR PATENTS
P.O. Box 1450
Alexandria, Virginia 22313-1450
www.uspto.gov

GOWLING LAFLEUR HENDERSON LLP
SUITE 1600, 1 FIRST CANADIAN PLACE
100 KING STREET WEST
TORONTO, ON M5X 1G5
CANADA

Mail Date: 06/14/2010

Applicant	: Lianghua Yang	: DECISION ON REQUEST FOR
Patent Number	: 7610529	: RECALCULATION of PATENT
Issue Date	: 10/27/2009	: TERM ADJUSTMENT IN VIEW
Application No	: 11/413,028	: OF WYETH AND NOTICE OF INTENT TO
Filed	: 04/28/2006	: ISSUE CERTIFICATE OF CORRECTION
		:

The Request for Recalculation is **GRANTED** to the extent indicated.

The patent term adjustment has been determined to be **642** days. The USPTO will *sua sponte* issue a certificate of correction reflecting the amount of PTA days determined by the recalculation.

Prior to the issuance of the certificate of correction, the USPTO will afford patentee an opportunity to be heard and request reconsideration. Accordingly, patentee has **one month or thirty (30) days**, whichever is longer, to file a request for reconsideration of this patent term adjustment calculation. See 35 U.S.C. 154(b)(3)(B)(ii) and 37 CFR 1.322(a)(4). No extensions of time will be granted under 37 CFR 1.136.

Patentee should use document code PET.OP if electronically filing a request for reconsideration of this patent term adjustment calculation. The patentee must also include the information required by 37 CFR 1.705(b)(2) and the fee required by 37 CFR 1.18(e). If patentee does not file a timely request for reconsideration of this patent term adjustment calculation including the information required by 37 CFR 1.705(b)(2) and the fee required by 37 CFR 1.18(e), the USPTO will issue a certificate of correction reflecting the PTA determination noted above.

Patentee should be aware that in order to preserve the right to review in the United States District Court for the District of Columbia of the USPTO patent term adjustment determination, patentee must ensure that he or she also take the steps required under 35 U.S.C. 154(b)(4)(A) in a timely manner. Nothing in the request for recalculation should be construed as providing an alternative time frame for commencing a civil action under 35 U.S.C. 154(b)(4)(A).

Any questions concerning this decision should be directed to the Office of Patent Legal Administration at 571-272-7702.

UNITED STATES PATENT AND TRADEMARK OFFICE

UNITED STATES DEPARTMENT OF COMMERCE
United States Patent and Trademark Office
Address: COMMISSIONER FOR PATENTS
P.O. Box 1450
Alexandria, Virginia 22313-1450
www.uspto.gov

ANDRUS, SCEALES, STARKE & SAWALL, LLP
100 EAST WISCONSIN AVENUE, SUITE 1100
MILWAUKEE, WI 53202

Mail Date: 04/21/2010

Applicant	: Patrick D. Ellis	: DECISION ON REQUEST FOR
Patent Number	: 7591761	: RECALCULATION of PATENT
Issue Date	: 09/22/2009	: TERM ADJUSTMENT IN VIEW
Appliction No	: 11/413,037	: OF WYETH AND NOTICE OF INTENT TO
Filed	: 04/27/2006	: ISSUE CERTIFICATE OF CORRECTION
		:

The Request for Recalculation is **GRANTED** to the extent indicated.

The patent term adjustment has been determined to be **632** days. The USPTO will *sua sponte* issue a certificate of correction reflecting the amount of PTA days determined by the recalculation.

Prior to the issuance of the certificate of correction, the USPTO will afford patentee an opportunity to be heard and request reconsideration. Accordingly, patentee has **one month or thirty (30) days**, whichever is longer, to file a request for reconsideration of this patent term adjustment calculation. See 35 U.S.C. 154(b)(3)(B)(ii) and 37 CFR 1.322(a)(4). No extensions of time will be granted under 37 CFR 1.136.

Patentee should use document code PET.OP if electronically filing a request for reconsideration of this patent term adjustment calculation. The patentee must also include the information required by 37 CFR 1.705(b)(2) and the fee required by 37 CFR 1.18(e). If patentee does not file a timely request for reconsideration of this patent term adjustment calculation including the information required by 37 CFR 1.705(b)(2) and the fee required by 37 CFR 1.18(e), the USPTO will issue a certificate of correction reflecting the PTA determination noted above.

Patentee should be aware that in order to preserve the right to review in the United States District Court for the District of Columbia of the USPTO patent term adjustment determination, patentee must ensure that he or she also take the steps required under 35 U.S.C. 154(b)(4)(A) in a timely manner. Nothing in the request for recalculation should be construed as providing an alternative time frame for commencing a civil action under 35 U.S.C. 154(b)(4)(A).

Any questions concerning this decision should be directed to the Office of Patent Legal Administration at 571-272-7702.

UNITED STATES PATENT AND TRADEMARK OFFICE

Commissioner for Patents
United States Patent and Trademark Office
P.O. Box 1450
Alexandria, VA 22313-1450
www.uspto.gov

SPRINKLE IP LAW GROUP
1301 W. 25TH STREET
SUITE 408
AUSTIN TX 78705

COPY MAILED

DEC 19 2006

OFFICE OF PETITIONS

In re Application of
Derrick et al.
Application No. 11/413,051
Filed: April 27, 2006
Attorney Docket No. 42P24561

DECISION REFUSING STATUS
UNDER 37 CFR 1.47(a)

This is in response to the petition filed October 26, 2006 (certificate of mailing October 24, 2006) under 37 CFR. §1.47(a).

The petition under 37 CFR. §1.47(a) is **DISMISSED**.

Rule 47 applicant is given TWO MONTHS from the mailing date of this decision to reply, correcting the below-noted deficiencies. Any reply should be entitled "Request for Reconsideration of Petition Under 37 CFR. §1.47(a)," and should only address the deficiencies noted below, except that the reply may include an oath or declaration executed by the non-signing inventor. **Failure to respond will result in abandonment of the application**. Any extensions of time will be governed by 37 CFR. §1.136(a).

The above-identified application was filed on April 27 , 2006, without an executed oath or declaration. Accordingly, on May 24, 2006, applicant was mailed a "Notice to File Missing Parts of Nonprovisional Application - Filing Date Granted," requiring for the purposes of this decision an executed oath or declaration in compliance with §1.63, and a surcharge for its late filing. This Notice set an extendable two-month period for reply of July 24, 2006.

In reply, applicant filed a petition, the surcharge for late filing of the declaration and a declaration. To make the reply timely, a three (3) month extension of time was also submitted.

A grantable petition under 37 CFR. §1.47(a) requires: (1) proof that the non-signing inventor cannot be reached or refuses to sign the oath or declaration after having been presented with the application papers (specification, claims and drawings); (2) an acceptable oath or declaration in compliance with 35 U.S.C. §§115 and 116; (3) the petition fee; and (4) a

statement of the last known address of the non-signing inventor. The instant petition does not satisfy requirement (2).

As to item (2), the declaration submitted is not in compliance with 37 CFR 1.63. Rule 47 applicant failed to provide the citizenship of non-signing inventor Liu pursuant to 37 CFR 1.63 (a)(3). If an application data sheet (37 CFR 1.76) is used, data supplied in the application data sheet need not be provided elsewhere in the application except that the citizenship of each inventor must be provided in the oath or declaration under 37 CFR 1.63 even if this information is provided in the application data sheet (see 37 CFR 1.76(b)).

Further, the signature block of inventors Dobbs and Palaniswamy contain non-initialed alterations to the declaration.

A newly executed declaration without alterations and containing the citizenship of inventor Liu must be submitted.

The address on the petition differs from the correspondence address of record. If appropriate, a change of address should be filed in accordance with MPEP 601.03. A courtesy copy of this decision is being mailed to the address given on the petition. However, the Office will mail all future correspondence solely to the address of record.

Further correspondence with respect to this matter should be addressed as follows:

By mail:	Mail Stop Petition Commissioner for Patents P.O. Box 1450 Alexandria, VA 22313-1450
By facsimile:	(571) 273-8300
By delivery service: (FedEx, UPS, DHL, etc.)	U.S. Patent and Trademark Office Customer Service Window, Randolph Building 401 Dulany Street Alexandria, VA 22314

Telephone inquiries related to this decision may be directed to the undersigned at (571) 272-3215.

Charlema R. Grant

Charlema R. Grant
Petitions Attorney
Office of Petitions

cc: Paul Mendonsa
Blakely, Sokoloff, Taylor & Zafman, LLP
12400 Wilshire Blvd. 7th Fl.
Los Angeles. CA 90025

UNITED STATES PATENT AND TRADEMARK OFFICE

Commissioner for Patents
United States Patent and Trademark Office
P.O. Box 1450
Alexandria, VA 22313-1450
www.uspto.gov

SPRINKLE IP LAW GROUP
1301 W. 25TH STREET
SUITE 408
AUSTIN TX 78705

COPY MAILED

JAN 0 8 2007

OFFICE OF PETITIONS

In re Application of :
John E. Derrick, et al. :
Application No. 11/413,051 : DECISION ON PETITION
Filed: April 27, 2005 : TO WITHDRAW
Attorney Docket No. INTEL1130-1 : FROM RECORD
:

This is a decision on the Request to Withdraw as attorney or agent of record under 37 C.F.R. § 1.36(b) filed July 3, 2006.

The request is **DISMISSED** as moot.

A review of the file record indicates that the power of attorney to Sprinkle IP Law Group has been revoked by the assignee of the patent application on October 25, 2006. Accordingly, the request to withdraw under 37 C.F.R. § 1.36(b) is moot.

All future communications from the Office will continue to be directed to the below-listed address until otherwise notified by applicant.

Telephone inquires concerning this decision should be directed to undersigned at 571-272-1642.

April M. Wise
Petitions Examiner
Office of Petitions

cc: BLAKELY SOKOLOFF TAYLOR & ZAFMAN
12400 WILSHIRE BOULEVARD
SEVENTH FLOOR
LOS ANGELES, CA 90025-1030

UNITED STATES PATENT AND TRADEMARK OFFICE

UNITED STATES DEPARTMENT OF COMMERCE
United States Patent and Trademark Office
Address: COMMISSIONER FOR PATENTS
P.O. Box 1450
Alexandria, Virginia 22313-1450
www.uspto.gov

APPLICATION NUMBER	FILING OR 371 (c) DATE	FIRST NAMED APPLICANT	ATTY. DOCKET NO./TITLE
11/413,051	04/27/2006	John E. Derrick	42P24561

CONFIRMATION NO. 7560

OC000000021809462

OC000000021809462

44654
SPRINKLE IP LAW GROUP
1301 W. 25TH STREET
SUITE 408
AUSTIN, TX 78705

Date Mailed: 01/03/2007

NOTICE REGARDING CHANGE OF POWER OF ATTORNEY

This is in response to the Power of Attorney filed 10/25/2006.

- The Power of Attorney to you in this application has been revoked by the assignee who has intervened as provided by 37 CFR 3.71. Future correspondence will be mailed to the new address of record(37 CFR 1.33).

APRIL M WISE
OP (571) 272-1642

FORMER ATTORNEY/AGENT COPY

UNITED STATES PATENT AND TRADEMARK OFFICE

Commissioner for Patents
United States Patent and Trademark Office
P.O. Box 1450
Alexandria, VA 22313-1450
www.uspto.gov

BLAKELY SOKOLOFF TAYLOR & ZAFMAN
12400 WILSHIRE BOULEVARD
SEVENTH FLOOR
LOS ANGELES CA 90025-1030

COPY MAILED

MAR 28 2007

OFFICE OF PETITIONS

In re Application of
John Derrick, Richard Trujillo, Daniel Cermak, Bryan Dobbs, Howars Liu, Rakesh Bharta, Udi Kalekin, Russell Davoli, Clifford Hall and Avinash Palaniswamy
Application No. 11/413,051
Filed: April 27, 2006
Attorney Docket Number: 42P24561

Title of Invention: Method and System For An Architecture For the Processing of Structured Documents

DECISION ACCORDING STATUS
UNDER 37 C.F.R. §1.47(b)

This is in response to the renewed petition for status under 37 C.F.R. §1.47(b), filed February 16, 2007.

The petition is **GRANTED**.

Applicant has satisfied the requirements of §1.47(b)[1]. Applicant, by declaration of persons with first hand knowledge and documentary evidence, demonstrated that the non-signing inventors have refused to sign the declaration. This declaration has been reviewed and is found in compliance with 1.63 and 1.64. Applicant paid the petition fee and included a statement of the non-signing inventors' last known addresses in the petition. Proprietary interest in the application has been established.

This application is hereby accorded Rule 1.47(b) status.

As provided in Rule 1.47(c), this Office will forward notice of this application's filing to

[1] A grantable petition under 37 C.F.R. §1.47(b) requires: (1) proof that the non-signing inventor cannot be reached or refuses to sign the oath or declaration; (2) an acceptable oath or declaration; (3) the petition fee; (4) a statement of last known address of the non-signing inventor; (5) proof of proprietary interest; and (6) proof of irreparable damage.

the non-signing inventor at the address given in the petition. Notice of the filing of this application will also be published in the Official Gazette.

The application file is being forwarded to the Office of Initial Patent Examination for processing.

Telephone inquiries regarding this decision should be directed to the undersigned at (571) 272-3215.

Charlema R. Grant

Petitions Attorney

Office of Petitions

UNITED STATES PATENT AND TRADEMARK OFFICE

Commissioner for Patents
United States Patent and Trademark Office
P.O. Box 1450
Alexandria, VA 22313-1450
www.uspto.gov

Howard Liu
3608 Thorp Springs
Plano, Texas 75025

COPY MAILED

MAR 2 8 2007

OFFICE OF PETITIONS

In re Application of
John Derrick, Richard Trujillo, Daniel Cermak, Bryan Dobbs, Howars Liu, Rakesh Bharta, Udi Kalekin, Russell Davoli, Clifford Hall and Avinash Palaniswamy
Application No. 11/413,051
Filed: April 27, 2006
Attorney Docket Number: 42P24561
Title of Invention: Method and System For An Architecture For the Processing of Structured Documents

: LETTER

Dear Mr. Liu:

You are named as the sole inventor in the above-identified United States patent application filed under the provisions of 35 U.S.C. 118 (United States Code) and 37 CFR 1.47(b). Should a patent be granted on the application you will be designated therein as a co-inventor.

As the named inventor you are entitled to inspect any paper in the file wrapper of the application, order copies of all or any part thereof (at a prepaid cost per 37 CFR 1.19) or make your position of record in the application. Alternatively, you may arrange to do any of the preceding through a registered patent attorney or agent presenting written authorization from you. If you care to join the application, counsel of record (see below) would presumably assist you. Joining in the application would entail the filing of an appropriate oath or declaration by you pursuant to 37 CFR 1.63.

Telephone inquiries regarding this communication should be directed to Petitions Attorney Charlema R. Grant at (571) 272-3215. Requests for information regarding your application should be directed to the File Information Unit at (703) 308-2733. Information regarding how to pay for and order a copy of the application, or a specific paper in the application, should be directed to Certification Division at (703) 308-9726 or 1-800-972-6382 (outside the Washington D.C. area).

Charlema R. Grant

Charlema R. Grant
Petitions Attorney
Office of Petitions

BLAKELY SOKOLOFF TAYLOR & ZAFMAN
12400 WILSHIRE BOULEVARD
SEVENTH FLOOR
LOS ANGELES CA 90025-1030
ATTN: Mark Van Ness

UNITED STATES PATENT AND TRADEMARK OFFICE

Commissioner for Patents
United States Patent and Trademark Office
P.O. Box 1450
Alexandria, VA 22313-1450
www.uspto.gov

SPRINKLE IP LAW GROUP
1301 W. 25TH STREET
SUITE 408
AUSTIN, TX 78705

COPY MAILED

MAR 12 2007

OFFICE OF PETITIONS

In re Application of
HOWARD, TSOI
Application No. 11/413,070
Filed: April 27, 2006
Attorney Docket No. **42P2455**

DECISION ON PETITION
TO WITHDRAW
FROM RECORD

This is a decision on the Request to Withdraw as attorney or agent of record under 37 C.F.R. § 1.36(b), filed July 3, 2006.

The request is **NOT APPROVED** as moot.

A review of the file record indicates that the power of attorney to Ari G. Akmal of Sprinkl IP Law Group has been revoked by the assignee of the patent application on October 25, 2006. Accordingly, the request to withdraw under 37 C.F.R. § 1.36(b) is moot.

All future communications from the Office will continue to be directed to the below-listed address until otherwise notified by applicant.

Telephone inquires concerning this decision should be directed to Tredelle Jackson at 571-272-2783.

Monica A. Graves
Petitions Examiner
Office of Petitions

cc: BLAKELY SOKOLOFF TAYLOR & ZAFMAN
12400 WILSHIRE BOULEVARD
SEVENTH FLOOR
LOS ANGELES, CA 90025-1030

UNITED STATES PATENT AND TRADEMARK OFFICE

UNITED STATES DEPARTMENT OF COMMERCE
United States Patent and Trademark Office
Address: COMMISSIONER FOR PATENTS
P.O. Box 1450
Alexandria, Virginia 22313-1450
www.uspto.gov

APPLICATION NO.	FILING DATE	FIRST NAMED INVENTOR	ATTORNEY DOCKET NO.	CONFIRMATION NO.
11/413,092	04/28/2006	Shinji Kobayashi	290481US8	8915

7590 08/26/2009

OBLON, SPIVAK, MCCLELLAND MAIER & NEUSTADT, L.L.P.
1940 DUKE STREET
ALEXANDRIA, VA 22314

EXAMINER	
CHIN, VIVIAN C	

ART UNIT	PAPER NUMBER
2614	

NOTIFICATION DATE	DELIVERY MODE
08/26/2009	ELECTRONIC

DECISION GRANTING PETITION UNDER 37 CFR 1.138(d)

The declaration of express abandonment is recognized

This is in response to the petition under 37 CFR 1.138(d), requesting for a refund of any previously paid search fee and excess claims fee in the above-identified application.

The petition is granted.

The express abandonment is recognized. Any previously paid search fee and excess claims fee are hereby refunded.

Telephone inquiries should be directed to the Office of Data Management at (571) 272-4200.

Patent Publication Branch
Office of Data Management

Refund Ref:
08/27/2009 0030073743

Credit Card Refund Total: $500.00

Rb Exp..: XXXXXXXXXXX1622

Adjustment date: 08/27/2009 NFARMER
05701/2006 YPOLITE1 00000083 11413092
02 FC:1111 -500.00 OP

UNITED STATES PATENT AND TRADEMARK OFFICE

UNITED STATES DEPARTMENT OF COMMERCE
United States Patent and Trademark Office
Address: COMMISSIONER FOR PATENTS
P.O. Box 1450
Alexandria, Virginia 22313-1450
www.uspto.gov

FOLEY AND LARDNER LLP
SUITE 500
3000 K STREET NW
WASHINGTON, DC 20007

Mail Date: 04/21/2010

Applicant	: Narender Singh Nehra	: DECISION ON REQUEST FOR
Patent Number	: 7665243	: RECALCULATION of PATENT
Issue Date	: 02/23/2010	: TERM ADJUSTMENT IN VIEW
Appliction No	: 11/413,105	: OF WYETH AND NOTICE OF INTENT TO
Filed	: 04/28/2006	: ISSUE CERTIFICATE OF CORRECTION
		:

The Request for Recalculation is **GRANTED** to the extent indicated.

The patent term adjustment has been determined to be **401** days. The USPTO will *sua sponte* issue a certificate of correction reflecting the amount of PTA days determined by the recalculation.

Prior to the issuance of the certificate of correction, the USPTO will afford patentee an opportunity to be heard and request reconsideration. Accordingly, patentee has **one month or thirty (30) days**, whichever is longer, to file a request for reconsideration of this patent term adjustment calculation. See 35 U.S.C. 154(b)(3)(B)(ii) and 37 CFR 1.322(a)(4). No extensions of time will be granted under 37 CFR 1.136.

Patentee should use document code PET.OP if electronically filing a request for reconsideration of this patent term adjustment calculation. The patentee must also include the information required by 37 CFR 1.705(b)(2) and the fee required by 37 CFR 1.18(e). If patentee does not file a timely request for reconsideration of this patent term adjustment calculation including the information required by 37 CFR 1.705(b)(2) and the fee required by 37 CFR 1.18(e), the USPTO will issue a certificate of correction reflecting the PTA determination noted above.

Patentee should be aware that in order to preserve the right to review in the United States District Court for the District of Columbia of the USPTO patent term adjustment determination, patentee must ensure that he or she also take the steps required under 35 U.S.C. 154(b)(4)(A) in a timely manner. Nothing in the request for recalculation should be construed as providing an alternative time frame for commencing a civil action under 35 U.S.C. 154(b)(4)(A).

Any questions concerning this decision should be directed to the Office of Patent Legal Administration at 571-272-7702.

PRINTER RUSH

(PTO ASSISTANCE)

Application: 11413130	**Examiner:** Saunders	**GAU:** 1644
From: Jeanne Fry	**Location:** FDC	**Date:** 05/28/2010

Tracking #: Week Date: 06/16/2008

DOC CODE	DOC DATE	MISCELLANEOUS
☐ 1449		☐ Continuing Data
☐ IDS		☐ Foreign Priority
☒ CLM	06/15/2008	☐ Document Legibility
☐ IIFW/FWCLM		☐ Fees
☐ SRFW		☐ Other
☐ DRW		
☐ OATH		Attn:
☐ 312		
☐ SPEC		

[RUSH] Message:

In the newest claim amendment, dated 09/15/08, there are 7 claims. In the previous claim set, dated 01/18/08, there are 14 claims, and there is nothing saying to cancel claims 8 to 14. Please verify which claim set should be used.

Thank You
JFG

[XRUSH] Response:

Total claims allowed: 13
Claims 1-3 and 5-7 (see claim of 9/15/2008
Claim 8-14 (See Misc. document of 2/9/09).

RAMIREDDY SHUKLA, PH.D.
SUPERVISORY PATENT EXAMINER

Examiner: PUBS contacts - for DESIGNS: Don Fairchild, 703-756-1566; for ALL OTHER files: Bernadette Queen, 703-756-1565.
NOTE: This form will be included as part of the official USPTO record with the response document coded as XRUSH.
REV: May 09

UNITED STATES PATENT AND TRADEMARK OFFICE

COMMISSIONER FOR PATENTS
UNITED STATES PATENT AND TRADEMARK OFFICE
P.O. BOX 1450
ALEXANDRIA, VA 22313-1450
www.uspto.gov

OBLON, SPIVAK, MCCLELLAND
MAIER & NEUSTADT, L.L.P.
1940 DUKE STREET
ALEXANDRIA VA 22314

COPY MAILED

DEC 24 2009

OFFICE OF PETITIONS

In re Patent No. 7,563,805 :
Hisashi Takahashi, et al. : DECISION DISMISSING
Application No. 11/413,153 : REQUEST FOR
Issue Date: July 21, 2009 : RECONSIDERATION OF
Filed: April 28, 2006 : PATENT TERM ADJUSTMENT
Attorney Docket No. 290564US0 : UNDER 37 CFR 1.705

This is in response to the PETITION UNDER 37 C.F.R. §1.705(d) AND REQUEST FOR RECONSIDERATION OF PATENT TERM ADJUSTMENT, filed August 17, 2009. Patentees requests that the determination of patent term adjustment be corrected from two hundred fifty-six (256) days to three hundred forty (340) days.

The request for reconsideration of patent term adjustment is **DISMISSED** with respect to making any change in the patent term adjustment determination under 35 U.S.C. § 154(b) of 256 days.

On July 21, 2009, the application matured into U.S. Patent No. 7,563,805, with a revised patent term adjustment of 256 days. The Office determined that the 84 days of Office delay pursuant to 35 U.S.C. 154(b)(1)(B) and 37 CFR 1.702(b) overlaps with the 287 days of Office delay pursuant to 35 U.S.C. § 154(b)(1)(A) and 37 CFR 1.702(a)(1) accorded prior to the issuance of the patent. As such, 0 additional days of patent term adjustment were entered at issuance under the three-year pendency provision. Given the Office delay of 287 days, the patent issued with a revised patent term adjustment of 256 (287 - 31 applicant delay) days.

On August 17, 2009, patentees timely submitted this request for reconsideration of patent term adjustment (with required fee), asserting that the correct number of days of Patent Term Adjustment is 340 days under the court's interpretation of the overlap provision as set forth in Wyeth v. Dudas, 580 F. Supp. 2d 138, 88 U.S.P.Q. 2d 1538 (D.D.C. 2008). Patentees assert

that pursuant to Wyeth, a PTO delay under §154(b)(1)(A) overlaps with a delay under §154(b)(1)(B) only if the delays "occur on the same day." Patentees maintain that the total non-overlapping PTO delay under § 154(b)(1)(A) & (B) is 371 (287 + 84 - 0 overlap) days as these periods do not occur on the same day. Further, given the applicant delay of 31 days, patentees assert entitlement to 340 (371 - 31) days of patent term adjustment.

Patentees' interpretation of the period of overlap has been considered, but found inconsistent with the Office's interpretation of the overlap provision, 35 U.S.C. 154(b)(2)(A). 35 U.S.C. 154(b)(2)(A) limits the adjustment of patent term, as follows:

> to the extent that the periods of delay attributable to grounds specified in paragraph (1) overlap, the period of any adjustment granted under this subsection shall not exceed the actual number of days the issuance of the patent was delayed.

As explained in *Explanation of 37 CFR 1.703(f) and of the United States Patent and Trademark Office Interpretation of 35 U.S.C. 154(b)(2)(A)*, 69 Fed. Reg. 34283 (June 21, 2004), the Office interprets 35 U.S.C. 154(b)(2)(A) as permitting either patent term adjustment under 35 U.S.C. 154(b)(1)(A)(i)-(iv), or patent term adjustment under 35 U.S.C. 154(b)(1)(B), but not as permitting patent term adjustment under both 35 U.S.C. 154(b)(1)(A)(i)-(iv) and 154(b)(1)(B). Accordingly, the Office implements the overlap provision as follows:

> If an application is entitled to an adjustment under 35 U.S.C. 154(b)(1)(B), the entire period during which the application was pending (except for periods excluded under 35 U.S.C. 154(b)(1)(B)(i)-(iii)), and not just the period beginning three years after the actual filing date of the application, is the period of delay under 35 U.S.C. 154(b)(1)(B) in determining whether periods of delay overlap under 35 U.S.C. 154(b)(2)(A). Thus, any days of delay for Office issuance of the patent more than 3 years after the filing date of the application, which overlap with the days of patent term adjustment accorded prior to the issuance of the patent will not result in any additional patent term adjustment. See 35 U.S.C. 154(b)(1)(B), 35 U.S.C. 154(b)(2)(A), and 37 CFR

§ 1.703(f). See *Changes to Implement Patent Term Adjustment Under Twenty Year Term; Final Rule*, 65 Fed. Reg. 56366 (Sept. 18, 2000). See also *Revision of Patent Term Extension and Patent Term Adjustment Provisions; Final Rule*, 69 Fed. Reg. 21704 (April 22, 2004), 1282 Off. Gaz. Pat. Office 100 (May 18, 2004). See also *Explanation of 37 CFR 1.703(f) and of the United States Patent and Trademark Office Interpretation of 35 U.S.C. 154(b)(2)(A)*, 69 Fed. Reg. 34283 (June 21, 2004).

Further, as stated in the *Explanation of 37 CFR 1.703(f) and of the United States Patent and Trademark Office Interpretation of 35 U.S.C. 154(b)(2)(A)*, the Office has consistently taken the position that if an application is entitled to an adjustment under the three-year pendency provision of 35 U.S.C. 154(b)(1)(B), the entire period during which the application was pending before the Office (except for periods excluded under 35 U.S.C. 154(b)(1)(B)(i)-(iii)), and not just the period beginning three years after the actual filing date of the application, is the relevant period under 35 U.S.C. 154(b)(1)(B) in determining whether periods of delay "overlap" under 35 U.S.C. 154(b)(2)(A).

This interpretation is consistent with the statute. Taken together the statute and rule provide that to the extent that periods of delay attributable to grounds specified in 35 U.S.C. 154(b)(1) and in corresponding §1.702 overlap, the period of adjustment granted shall not exceed the actual number of days the issuance of the patent was delayed.

In this instance, the relevant period under 35 U.S.C. 154(b)(1)(B) in determining whether periods of delay "overlap" under 35 U.S.C. 154(b)(2)(A) is the period during which the application was pending before the Office beginning on the application filing date under 35 U.S.C. 111(a), April 28, 2006, and ending on the date of issuance of the patent, July 21, 2009 (not including any other periods excluded under 35 U.S.C. 154(b)(1)(B)(i)-(iii)).

Pursuant to 35 U.S.C. 154(b)(1)(A) and 37 CFR 1.702(a)(1), 287 days of patent term adjustment were accorded during the pendency of the application for Office delay. Pursuant to 35 U.S.C. 154(b)(1)(B) and 37 CFR 1.702(b), 84 days of patent term adjustment accrued for Office issuance of the patent more than 3 years after the filing date of the application.

The 84 days of patent term adjustment under 37 CFR 1.702(b) overlap with the 287 days of patent term adjustment under 37 CFR 1.702(a)(1). Entry of both the 84 days and the 287 days is neither permitted nor warranted. 287 days is the actual number of days issuance of the patent was delayed.

Accordingly, at issuance, the Office properly entered 0 additional days of adjustment pursuant to § 1.702(b) for a total of the greater period of 287 days for Office delay.

In view thereof, no change will be made in the patent term adjustment of 256 days (287 days of Office delay - 31 days of applicant delay).

The Office acknowledges submission of the $200.00 fee set forth in 37 CFR 1.18(e). No additional fees are required.

Telephone inquiries specific to this matter should be directed to Senior Petitions Attorney Shirene Willis Brantley, at (571) 272-3230.

Nancy Johnson
Senior Petitions Attorney
Office of Petitions

UNITED STATES PATENT AND TRADEMARK OFFICE

UNITED STATES DEPARTMENT OF COMMERCE
United States Patent and Trademark Office
Address: COMMISSIONER FOR PATENTS
P.O. Box 1450
Alexandria, Virginia 22313-1450
www.uspto.gov

OBLON, SPIVAK, MCCLELLAND MAIER & NEUSTADT, L.L.P.
1940 DUKE STREET
ALEXANDRIA, VA 22314

Mail Date: 04/20/2010

Applicant	: Hisashi Takahashi	: DECISION ON REQUEST FOR
Patent Number	: 7563805	: RECALCULATION of PATENT
Issue Date	: 07/21/2009	: TERM ADJUSTMENT IN VIEW
Appliction No	: 11/413,153	: OF WYETH AND NOTICE OF INTENT TO
Filed	: 04/28/2006	: ISSUE CERTIFICATE OF CORRECTION
		:

The Request for Recalculation is **GRANTED** to the extent indicated.

The patent term adjustment has been determined to be **340** days. The USPTO will *sua sponte* issue a certificate of correction reflecting the amount of PTA days determined by the recalculation.

Prior to the issuance of the certificate of correction, the USPTO will afford patentee an opportunity to be heard and request reconsideration. Accordingly, patentee has **one month or thirty (30) days**, whichever is longer, to file a request for reconsideration of this patent term adjustment calculation. See 35 U.S.C. 154(b)(3)(B)(ii) and 37 CFR 1.322(a)(4). No extensions of time will be granted under 37 CFR 1.136.

Patentee should use document code PET.OP if electronically filing a request for reconsideration of this patent term adjustment calculation. The patentee must also include the information required by 37 CFR 1.705(b)(2) and the fee required by 37 CFR 1.18(e). If patentee does not file a timely request for reconsideration of this patent term adjustment calculation including the information required by 37 CFR 1.705(b)(2) and the fee required by 37 CFR 1.18(e), the USPTO will issue a certificate of correction reflecting the PTA determination noted above.

Patentee should be aware that in order to preserve the right to review in the United States District Court for the District of Columbia of the USPTO patent term adjustment determination, patentee must ensure that he or she also take the steps required under 35 U.S.C. 154(b)(4)(A) in a timely manner. Nothing in the request for recalculation should be construed as providing an alternative time frame for commencing a civil action under 35 U.S.C. 154(b)(4)(A).

Any questions concerning this decision should be directed to the Office of Patent Legal Administration at 571-272-7702.

UNITED STATES PATENT AND TRADEMARK OFFICE

COMMISSIONER FOR PATENTS
UNITED STATES PATENT AND TRADEMARK OFFICE
P.O. BOX 1450
ALEXANDRIA, VA 22313-1450
www.uspto.gov

HOWSON & HOWSON LLP / WYETH LLC
501 OFFICE CENTER DRIVE
SUITE 210
FORT WASHINGTON PA 19034

MAILED

APR 14 2010

OFFICE OF PETITIONS

In re Patent No. 7,595,338	:	DECISION ON REQUEST FOR
Wilk	:	RECONSIDERATION OF
Issue Date: September 29, 2009	:	PATENT TERM ADJUSTMENT
Application No. 11/413,159	:	AND
Filed: April 27, 2006	:	NOTICE OF INTENT TO ISSUE
Attorney Docket No. AM-101938	:	CERTIFICATE OF CORRECTION

This is a decision on the petition filed on November 25, 2009, which is being treated as a petition under 37 CFR 1.705(d) requesting that the patent term adjustment indicated on the above-identified patent be corrected to indicate that the term of the above-identified patent is extended or adjusted by five hundred ninety-five (595) days.

The petition to correct the patent term adjustment indicated on the above-identified patent to indicate that the term of the above-identified patent is extended or adjusted by five hundred ninety-five (595) days is **GRANTED**.

The Office acknowledges the submission of the $200.00 fee set forth in 37 CFR 1.18(e). No additional fees are required.

The application is being forwarded to the Certificates of Correction Branch for issuance of a certificate of correction. The Office will issue a certificate of correction indicating that the term of the above-identified patent is extended or adjusted by **five hundred ninety-five (595) days**.

Telephone inquiries specific to this matter should be directed to the undersigned at (571) 272-3211.

C. T. Donnell

Christina Tartera Donnell
Senior Petitions Attorney
Office of Petitions

Enclosure: Copy of DRAFT Certificate of Correction

UNITED STATES PATENT AND TRADEMARK OFFICE

CERTIFICATE OF CORRECTION

PATENT : 7,595,338 B2

DATED : Sept. 29, 2009 **DRAFT**

INVENTOR(S) : Wilk

It is certified that error appears in the above-identified patent and that said Letters Patent is hereby corrected as shown below:

On the cover page,

[*] Notice: Subject to any disclaimer, the term of this patent is extended or adjusted under 35 USC 154(b) by 440 days

Delete the phrase "by 440 days" and insert – by 595 days--

UNITED STATES PATENT AND TRADEMARK OFFICE

UNITED STATES DEPARTMENT OF COMMERCE
United States Patent and Trademark Office
Address: COMMISSIONER FOR PATENTS
P.O. Box 1450
Alexandria, Virginia 22313-1450
www.uspto.gov

Microsoft Corporation
One Microsoft Way
Redmond, WA 98052

Mail Date: 04/21/2010

Applicant	: Marieke Iwema	: DECISION ON REQUEST FOR
Patent Number	: 7581194	: RECALCULATION of PATENT
Issue Date	: 08/25/2009	: TERM ADJUSTMENT IN VIEW
Appliction No	: 11/413,184	: OF WYETH AND NOTICE OF INTENT TO
Filed	: 04/28/2006	: ISSUE CERTIFICATE OF CORRECTION
		:

The Request for Recalculation is **GRANTED** to the extent indicated.

The patent term adjustment has been determined to be **526** days. The USPTO will *sua sponte* issue a certificate of correction reflecting the amount of PTA days determined by the recalculation.

Prior to the issuance of the certificate of correction, the USPTO will afford patentee an opportunity to be heard and request reconsideration. Accordingly, patentee has **one month or thirty (30) days**, whichever is longer, to file a request for reconsideration of this patent term adjustment calculation. See 35 U.S.C. 154(b)(3)(B)(ii) and 37 CFR 1.322(a)(4). No extensions of time will be granted under 37 CFR 1.136.

Patentee should use document code PET.OP if electronically filing a request for reconsideration of this patent term adjustment calculation. The patentee must also include the information required by 37 CFR 1.705(b)(2) and the fee required by 37 CFR 1.18(e). If patentee does not file a timely request for reconsideration of this patent term adjustment calculation including the information required by 37 CFR 1.705(b)(2) and the fee required by 37 CFR 1.18(e), the USPTO will issue a certificate of correction reflecting the PTA determination noted above.

Patentee should be aware that in order to preserve the right to review in the United States District Court for the District of Columbia of the USPTO patent term adjustment determination, patentee must ensure that he or she also take the steps required under 35 U.S.C. 154(b)(4)(A) in a timely manner. Nothing in the request for recalculation should be construed as providing an alternative time frame for commencing a civil action under 35 U.S.C. 154(b)(4)(A).

Any questions concerning this decision should be directed to the Office of Patent Legal Administration at 571-272-7702.

UNITED STATES PATENT AND TRADEMARK OFFICE

Commissioner for Patents
United States Patent and Trademark Office
P.O. Box 1450
Alexandria, VA 22313-1450
www.uspto.gov

STERNE, KESSLER, GOLDSTEIN & FOX P.L.L.C.
1100 NEW YORK AVENUE, N.W.
WASHINGTON, DC 20005

COPY MAILED

AUG 0 3 2009

OFFICE OF PETITIONS

In re Application of
Mandeep Singh
Application No. 11/413,216
Filed: April 28, 2006
Attorney Docket No. 1857.5760000

DECISION GRANTING PETITION
UNDER 37 CFR 1.313(c)(2)

This is a decision on the petition under 37 CFR 1.313(c)(2), filed August 3, 2009, to withdraw the above-identified application from issue after payment of the issue fee.

The petition is **GRANTED**.

The above-identified application is withdrawn from issue for consideration of a submission under 37 CFR 1.114 (request for continued examination). *See* 37 CFR 1.313(c)(2).

Petitioner is advised that the issue fee paid on July 1, 2009 cannot be refunded. If, however, this application is again allowed, petitioner may request that it be applied towards the issue fee required by the new Notice of Allowance.[1]

Telephone inquiries regarding this decision should be directed to undersigned at (571) 272-1642. All other inquiries regarding the examination or status of this application should be directed to the Technology Center.

This application is being referred to Technology Center AU 2893 for processing of the request for continued examination under 37 CFR 1.114 and for consideration of the concurrently filed amendment with drawing.

/AMW/
April M. Wise
Petitions Examiner
Office of Petitions

---

[1] *The request to apply the issue fee to the new Notice may be satisfied by completing and returning the new Part B – Fee(s) Transmittal Form (along with any balance due at the time of submission). Petitioner is advised that the Issue Fee Transmittal Form* ***must*** *be completed and timely submitted to avoid abandonment of the application.*

UNITED STATES PATENT AND TRADEMARK OFFICE

UNITED STATES DEPARTMENT OF COMMERCE
United States Patent and Trademark Office
Address: COMMISSIONER FOR PATENTS
P.O. Box 1450
Alexandria, Virginia 22313-1450
www.uspto.gov

APPLICATION NO.	FILING DATE	FIRST NAMED INVENTOR	ATTORNEY DOCKET NO.	CONFIRMATION NO.
11/413,242	04/28/2006	James R. Petisce	DEXCOM.060A2	8330

7590 11/02/2007
KNOBBE MARTENS OLSON & BEAR LLP
2040 MAIN STREET
FOURTEENTH FLOOR
IRVINE, CA 92614

EXAMINER

ART UNIT	PAPER NUMBER
1645	

NOTIFICATION DATE	DELIVERY MODE
11/02/2007	ELECTRONIC

DECISION GRANTING PETITION UNDER 37 CFR 1.138(d)

The declaration of express abandonment is recognized

This is in response to the petition under 37 CFR 1.138(d), requesting for a refund of any previously paid search fee and excess claims fee in the above-identified application.

The petition is granted.

The express abandonment is recognized. Any previously paid search fee and excess claims fee are hereby refunded.

Telephone inquiries should be directed to the Office of Data Management at (571) 272-4200.

Patent Publication Branch
Office of Data Management

Adjustment date: 11/01/2007 KKING1
Name/Number: 11413242 250.00 OP
$1450200.00 OP

FORM PET651G (Rev. 08/07)

UNITED STATES PATENT AND TRADEMARK OFFICE

UNITED STATES DEPARTMENT OF COMMERCE
United States Patent and Trademark Office
Address: COMMISSIONER FOR PATENTS
P.O. Box 1450
Alexandria, Virginia 22313-1450
www.uspto.gov

POTTER ANDERSON & CORROON LLP
ATTN: JANET E. REED, PH.D.
P.O. BOX 951
WILMINGTON, DE 19899-0951

Mail Date: 04/21/2010

Applicant	: Robert Dicosimo	: DECISION ON REQUEST FOR
Patent Number	: 7612030	: RECALCULATION of PATENT
Issue Date	: 11/03/2009	: TERM ADJUSTMENT IN VIEW
Appliction No	: 11/413,246	: OF WYETH AND NOTICE OF INTENT TO
Filed	: 04/28/2006	: ISSUE CERTIFICATE OF CORRECTION
		:

The Request for Recalculation is **GRANTED** to the extent indicated.

The patent term adjustment has been determined to be **404** days. The USPTO will *sua sponte* issue a certificate of correction reflecting the amount of PTA days determined by the recalculation.

Prior to the issuance of the certificate of correction, the USPTO will afford patentee an opportunity to be heard and request reconsideration. Accordingly, patentee has **one month or thirty (30) days**, whichever is longer, to file a request for reconsideration of this patent term adjustment calculation. See 35 U.S.C. 154(b)(3)(B)(ii) and 37 CFR 1.322(a)(4). No extensions of time will be granted under 37 CFR 1.136.

Patentee should use document code PET.OP if electronically filing a request for reconsideration of this patent term adjustment calculation. The patentee must also include the information required by 37 CFR 1.705(b)(2) and the fee required by 37 CFR 1.18(e). If patentee does not file a timely request for reconsideration of this patent term adjustment calculation including the information required by 37 CFR 1.705(b)(2) and the fee required by 37 CFR 1.18(e), the USPTO will issue a certificate of correction reflecting the PTA determination noted above.

Patentee should be aware that in order to preserve the right to review in the United States District Court for the District of Columbia of the USPTO patent term adjustment determination, patentee must ensure that he or she also take the steps required under 35 U.S.C. 154(b)(4)(A) in a timely manner. Nothing in the request for recalculation should be construed as providing an alternative time frame for commencing a civil action under 35 U.S.C. 154(b)(4)(A).

Any questions concerning this decision should be directed to the Office of Patent Legal Administration at 571-272-7702.

UNITED STATES PATENT AND TRADEMARK OFFICE

Commissioner for Patents
United States Patent and Trademark Office
P.O. Box 1450
Alexandria, VA 22313-1450
www.uspto.gov

COPY MAILED

OCT 23 2008

OFFICE OF PETITIONS

Joseph Curtis Edmondson
15490 NW Oak Hills Drive
Beaverton, OR 97006

In re Application of :
Brian Tyrone Graham :
Application No. 11/413,259 : DECISION ON PETITION
Filed: April 28, 2006 : TO WITHDRAW
Attorney Docket No. GRA001 : FROM RECORD
:

This is a decision on the Request to Withdraw as attorney or agent under 37 C.F.R. § 1.36(b) or 37 C.F.R. § 10.40 filed October 15, 2008.

The request is **NOT APPROVED**.

A review of the file record indicates that Bradley M. Ganz does not have power of attorney in this patent application. Accordingly, the request to withdraw under 37 C.F.R. § 1.36(b) is not applicable.

All future communications from the Office will continue to be directed to the above-listed address until otherwise properly notified by the applicant.

Telephone inquires concerning this decision should be directed to Kimberly Inabinet at 571-272-4618.

Kimberly Inabinet
Petitions Examiner
Office of Petitions

cc: Bradley M. Ganz
P.O. Box 2200
Hillsboro, OR 97123

UNITED STATES PATENT AND TRADEMARK OFFICE

Commissioner for Patents
United States Patent and Trademark Office
P.O. Box 1450
Alexandria, VA 22313-1450
www.uspto.gov

MAILED

MAY 20 2010

OFFICE OF PETITIONS

PHILIP S. JOHNSON
JOHNSON & JOHNSON
ONE JOHNSON & JOHNSON PLAZA
NEW BRUNSWICK NJ 08933-7003

In re Patent No. 7,616,979	: DECISION ON REQUEST
Jones, et al.	: FOR
Issue Date: November 10, 2009	: RECONSIDERATION OF
Application No. 11/413,260	: PATENT TERM ADJUSTMENT
Filed: April 28, 2006	: and
Atty Docket No. **ETH5284USDIV1**	: NOTICE OF INTENT TO ISSUE
	: CERTIFICATE OF CORRECTION

This is a decision on the petition filed on January 11, 2010, which is being treated as a petition under 37 CFR 1.705(d) requesting that the patent term adjustment indicated on the above-identified patent be recalculated. Petitioner does not state specifically what petitioner believes the patent term adjustment is.

The petition to correct the patent term adjustment indicated on the above-identified patent to indicate that the term of the above-identified patent is extended or adjusted by six hundred and thirty-three (633) days is **GRANTED to the extent indicated herein.**

The Office will *sua sponte* issue a certificate of correction. Pursuant to 37 CFR 1.322, the Office will not issue a certificate of correction without first providing assignee or patentee an opportunity to be heard. Accordingly, patentees are given **one (1) month or thirty (30) days**, whichever is longer, from the mail date of this decision to respond. No extensions of time will be granted under § 1.136.

The petition fee as set forth in 37 CFR 1.18(e) will be charged to deposit account 10-0750. No additional fees are required.

The application is being forwarded to the Certificates of Correction Branch for issuance of a certificate of correction. The Office will issue a certificate of correction indicating that the term of the above-identified patent is extended or adjusted by **six hundred and thirty-three (633) days.**

Telephone inquiries specific to this matter should be directed to the undersigned, at (571) 272-3222.

Kenya A. McLaughlin
Petitions Attorney
Office of Petitions

Enclosure: Copy of DRAFT Certificate of Correction

DRAFT COPY

UNITED STATES PATENT AND TRADEMARK OFFICE

CERTIFICATE OF CORRECTION

PATENT : 7,616,979 B2

DATED : Nov. 10, 2009

INVENTOR(S) : Jones et al.

It is certified that error appears in the above-identified patent and that said Letters Patent is hereby corrected as shown below:

On the cover page,

[*] Notice: Subject to any disclaimer, the term of this patent is extended or adjusted under 35 USC 154(b) by (437) days

Delete the phrase "by 437 days" and insert – by 633 days--

UNITED STATES PATENT AND TRADEMARK OFFICE

Commissioner for Patents
United States Patent and Trademark Office
P.O. Box 1450
Alexandria, VA 22313-1450
www.uspto.gov

MACPHERSON KWOK CHEN & HEID LLP
2033 GATEWAY PLACE
SUITE 400
SAN JOSE CA 95110

COPY MAILED

JUL 29 2008

OFFICE OF PETITIONS

In re Application of :
Michael Tenbrock :
Application No. 11/413,280 : DECISION ON PETITION
Filed: April 28, 2006 : TO WITHDRAW
Attorney Docket No. M-15987 US : FROM RECORD
:

This is a decision on the Request to Withdraw as attorney or agent of record under 37 C.F.R. § 1.36(b), filed January 28 2008.

The request is **NOT APPROVED**.

A grantable request to withdraw as attorney/agent of record must be signed by every attorney/agent seeking to withdraw or contain a clear indication that one attorney is signing on behalf of another/others. A request to withdraw will not be approved unless at least 30 (thirty) days would remain between the date of approval and the later of the expiration date of a time to file a response or the expiration date of the maximum time period which can be extended under 37 C.F.R. § 1.136(a).

The Office cannot approve the request at this time since the reasons provided do not meet any of the conditions under the mandatory or permissive categories enumerated in 37 CFR 10.40. Section 10.40 of Title 37 of the Code of Federal Regulation states, "[a] practitioner shall not withdraw from employment in a proceeding before the Office without permission from the Office[.]" More specifically, 37 CFR 10.40 states, "[i]f paragraph (b) of this section is not applicable, a practitioner may not request permission to withdraw in matter pending before the Office unless such request or such withdrawal is" for one the permissive reasons listed in 37 CFR 10.40(c). The reasons set forth in the request, "transfer to inventor", does not meet any of the conditions set forth in 37 CFR 10.40.

All future communications from the Office will continue to be directed to the above-listed address until otherwise notified by applicant.

Telephone inquiries concerning this decision should be directed to undersigned at 571-272-1642.

April M. Wise
Petitions Examiner
Office of Petitions

cc: MICHAEL TENBROCK
7244 DOCKSIDE LANE
COLUMBIA, MD 21045

UNITED STATES PATENT AND TRADEMARK OFFICE

Commissioner for Patents
United States Patent and Trademark Office
P.O. Box 1450
Alexandria, VA 22313-1450
www.uspto.gov

APPLICATION NUMBER	FILING/RECEIPT DATE	FIRST NAMED APPLICANT	ATTORNEY DOCKET NUMBER
11/413,290	04/28/2006	Stephen J. Kramer	108298389US3

PERKINS COIE LLP
PATENT-SEA
PO BOX 1247
SEATTLE WA 98111-1247

DATE MAILED: August 29, 2007

DECISION GRANTING PETITION UNDER 37 CFR 1.138(d)
The declaration of express abandonment is recognized

This is in response to the petition under 37 CFR 1.138(d) filed August 9, 2007, requesting for a refund of any previously paid search fee and excess claims fee in the above-identified application.

The petition is granted.

The express abandonment is recognized. Any previously paid search fee and excess claims fee are hereby refunded.

Any inquiries concerning this decision should be directed to the Pre-Grant Publication Division at (703) 605-4283.

Barbara J. Debnam
Pre-Grant Publication Division

UNITED STATES PATENT AND TRADEMARK OFFICE

Commissioner for Patents
United States Patent and Trademark Office
P.O. Box 1450
Alexandria, VA 22313-1450
www.uspto.gov

DICKE, BILLIG & CZAJA, PLLC
ATTN: MD MATTERS
FIFTH STREET TOWERS, SUITE 2250
100 SOUTH FIFTH STREET
MINNEAPOLIS MN 55402

COPY MAILED

AUG 2 4 2007

OFFICE OF PETITIONS

In re Application of :
Cross et al. :
Application No. 11/413,316 : ON PETITION
Filed: April 28, 2006 :
Attorney Docket No. M190.211.101/ :
P0025626.00

This is a decision on the petition under 37 C.F.R. § 1.137(b), filed August 1, 2007, to revive the above-identified application.

The petition is **GRANTED.**

The petition satisfies the conditions for revival pursuant to the provisions of 37 CFR 1.137(b) in that (1) the reply in the form of an Oath/Declaration and late surcharge; (2) the petition fee; and (3) the required statement of unintentional delay have been received. Accordingly, the response has been accepted as having been unintentionally delayed.

This matter is being referred to the Office of Initial Patent Examination for further processing.

Telephone inquiries regarding this decision should be directed to the undersigned at (571) 272-3206.

Liana Walsh
Petitions Examiner
Office of Petitions

UNITED STATES PATENT AND TRADEMARK OFFICE

Commissioner for Patents
United States Patent and Trademark Office
P.O. Box 1450
Alexandria, VA 22313-1450
www.uspto.gov

MAILED

FEB 19 2010

OFFICE OF PETITIONS

ESCHWEILER & ASSOCIATES LLC
NATIONAL CITY BANK BUILDING
CLEVELAND OH 44114

In re Application of :
GRUENING-VON SCHWERIN, ULRIKE :
Application No. 11/413,320 :
Filed: 04/28/2006 :
Attorney Docket No. QIAGP122US :

DECISION ON PETITION

This is a decision on the petition under 37 CFR 1.137(b), filed August 7, 2009, to revive the above-identified application.

The petition is **GRANTED**.

This application became abandoned for failure to pay the issue and publication fees as required by the Notice of Allowance and Fee(s) Due mailed on November 4, 2008, which set a three (3) month statutory period for reply. Accordingly, the application became abandoned on February 5, 2009. A Notice of Abandonment was mailed on March 3, 2009.

The petition satisfies the requirements of 37 CFR 1.137(b) in that petitioner has supplied (1) the reply in the form of payment of the issue fee and publication fee, (2) the petition fee, and (3) a proper statement of unintentional delay.

This matter is being forwarded to the Office of Data Management for processing into a patent.

Telephone inquiries specifically concerning this decision should be directed to the undersigned at (571) 272-3211.

C. T. Donnell

Christina Tartera Donnell
Senior Petitions Attorney
Office of Petitions

UNITED STATES PATENT AND TRADEMARK OFFICE

Commissioner for Patents
United States Patent and Trademark Office
P.O. Box 1450
Alexandria, VA 22313-1450
www.uspto.gov

JJGJR: 02-07

Paper No: __

SHERIDAN ROSS PC
1560 BROADWAY
SUITE 1200
DENVER CO 80202

COPY MAILED

MAR 0 2 2007

OFFICE OF PETITIONS

In re Application of :
Lombardi, et al. :
Application No. 11/413,345 : ON PETITION
Filed: 27 April, 2006 :
Attorney Docket No. 3376-67 :

This is a decision on the petition filed on 21 November, 2006, under 37 C.F.R. §1.47(a).

For the reasons set forth below, the petition under 37 C.F.R. §1.47(a) is **GRANTED**.

BACKGROUND

The record indicates:

- the instant application was filed on 27 April, 2006, without, *inter alia*, a fully executed oath/declaration;

- on 22 May, 2006, the Examiner Office mailed a Notice of Missing Parts indicating, *inter alia*, that a fully executed oath/declaration (signed and dated) was required;

- on 21 November, 2006, Petitioner Jason H. Vick (Reg. No. 45,285) filed, *inter alia*, the petition, his statement evidencing diligence in the confirmation of the current/reasonably last known address of the non-signing co-inventor Dennis H. Green (Mr. Green), an oath/declaration executed by co-inventors Lombardi, Tranquilla, Buter, Hawthorne, Brunk and Herbert for themselves and on behalf of the non-signing co-inventor Mr.Green, and evidence (transmittal letter) supporting the averment that the entire

application (description, claims, abstract and drawings) was sent to non-signing co-inventor Mr. Green, all in satisfaction of the statutory and regulatory requirements.

Out of an abundance of caution, Petitioners always are reminded that those registered to practice *and* all others who make representations before the Office are reminded to inquire into the underlying facts of representations made to the Office and support averments with the appropriate documentation–since all owe to the Office the continuing duty to disclose.[1]

This application and its papers have been reviewed and found in compliance with 37 C.F.R. §1.47(a).

---

[1] See supplement of 17 June, 1999. The Patent and Trademark Office is relying on petitioner's duty of candor and good faith and accepting a statement made by Petitioner. See Changes to Patent Practice and Procedure, 62 Fed. Reg. at 53160 and 53178, 1203 Off. Gaz. Pat. Office at 88 and 103 (responses to comments 64 and 109)(applicant obligated under 37 C.F.R. §10.18 to inquire into the underlying facts and circumstances when providing statements to the Patent and Trademark Office).

Specifically, the regulations at 37 C.F.R. §10.18 provide:

§ 10.18 Signature and certificate for correspondence filed in the Patent and Trademark Office.
(a) For all documents filed in the Office in patent, trademark, and other non-patent matters, except for correspondence that is required to be signed by the applicant or party, each piece of correspondence filed by a practitioner in the Patent and Trademark Office must bear a signature by such practitioner complying with the provisions of §1.4(d), §1.4(e), or § 2.193(c)(1) of this chapter.
(b) By presenting to the Office (whether by signing, filing, submitting, or later advocating) any paper, the party presenting such paper, whether a practitioner or non-practitioner, is certifying that—

(1) All statements made therein of the party's own knowledge are true, all statements made therein on information and belief are believed to be true, and all statements made therein are made with the knowledge that whoever, in any matter within the jurisdiction of the Patent and Trademark Office, knowingly and willfully falsifies, conceals, or covers up by any trick, scheme, or device a material fact, or makes any false, fictitious or fraudulent statements or representations, or makes or uses any false writing or document knowing the same to contain any false, fictitious or fraudulent statement or entry, shall be subject to the penalties set forth under 18 U.S.C. 1001, and that violations of this paragraph may jeopardize the validity of the application or document, or the validity or enforceability of any patent, trademark registration, or certificate resulting therefrom; and

(2) To the best of the party's knowledge, information and belief, formed after an inquiry reasonable under the circumstances, that —

(i) The paper is not being presented for any improper purpose, such as to harass someone or to cause unnecessary delay or needless increase in the cost of prosecution before the Office;

(ii) The claims and other legal contentions therein are warranted by existing law or by a nonfrivolous argument for the extension, modification, or reversal of existing law or the establishment of new law;

(iii) The allegations and other factual contentions have evidentiary support or, if specifically so identified, are likely to have evidentiary support after a reasonable opportunity for further investigation or discovery; and

(iv) The denials of factual contentions are warranted on the evidence, or if specifically so identified, are reasonably based on a lack of information or belief.

(c) Violations of paragraph (b)(1) of this section by a practitioner or non-practitioner may jeopardize the validity of the application or document, or the validity or enforceability of any patent, trademark registration, or certificate resulting therefrom. Violations of any of paragraphs (b)(2)(i) through (iv) of this section are, after notice and reasonable opportunity to respond, subject to such sanctions as deemed appropriate by the Commissioner, or the Commissioner's designee, which may include, but are not limited to, any combination of —

(1) Holding certain facts to have been established;
(2) Returning papers;
(3) Precluding a party from filing a paper, or presenting or contesting an issue;
(4) Imposing a monetary sanction;
(5) Requiring a terminal disclaimer for the period of the delay; or
(6) Terminating the proceedings in the Patent and Trademark Office.

(d) Any practitioner violating the provisions of this section may also be subject to disciplinary action. See § 10.23(c)(15).
[Added 50 FR 5175, Feb. 6, 1985, effective Mar. 8, 1985; para. (a) revised, 58 FR 54494, Oct. 22, 1993, effective Nov. 22, 1993; paras. (a) & (b) revised, paras. (c) & (d) added, 62 FR 53131, Oct. 10, 1997, effective Dec. 1, 1997; para. (a) revised, 69 FR 56481, Sept. 21, 2004, effective Oct. 21, 2004]

This application hereby is **ACCORDED status under 37 C.F.R. §1.47(a)**.

As provided under 37 C.F.R. §1.47(a), the Office will forward notice of this application's filing to the non-signing inventor at the address given in the petition.

Notice of the filing of this application also will be published in the Official Gazette.

This file is being released to OIPE for processing as necessary to reflect the instant decision before being released for examination in due course.

While telephone inquiries regarding this decision may be directed to the undersigned at (571) 272-3214, it is noted that all practice before the Office is in writing (see: 37 C.F.R. §1.2[2]) and the proper authority for action on any matter in this regard are the statutes (35 U.S.C.), regulations (37 C.F.R.) and the commentary on policy (MPEP). Therefore, no telephone discussion may be controlling or considered authority for Petitioner's/Caller's action(s).

John J. Gillon, Jr.
Senior Attorney
Office of Petitions

[2] The regulations at 37 C.F.R. §1.2 provide:

§1.2 Business to be transacted in writing.

All business with the Patent and Trademark Office should be transacted in writing.The personal attendance of applicants or their attorneys or agents at the Patent and Trademark Office is unnecessary. The action of the Patent and Trademark Office will be based exclusively on the written record in the Office. No attention will be paid to any alleged oral promise, stipulation,or understanding in relation to which there is disagreement or doubt.

UNITED STATES PATENT AND TRADEMARK OFFICE

Commissioner for Patents
United States Patent and Trademark Office
P.O. Box 1450
Alexandria, VA 22313-1450
www.uspto.gov

JJGJR.: 02-07

Paper No: __

DENNIS H. GREEN
9455 W. 68TH AVENUE
ARVADA, CO 80004

COPY MAILED

MAR 0 2 2007

OFFICE OF PETITIONS

In re Application of :
Lombardi, et al. :
Application No. 11/413,345 : COMMUNICATION
Filed: 27 April, 2006 :
Attorney Docket No. 3376-67 :

Dear Dennis H. Green:

You are named as inventor in the above identified United States patent application, filed under the provisions of 35 U.S.C. §116 (United States Code), and 37 C.F.R. §1.47,[1] ¶a, Rules of Practice in Patent Cases. Should a patent be granted on the application you will be designated therein as inventor.

As a named inventor you are entitled to inspect any paper in the file wrapper of the application,

---

[1] The regulations at 37 C.F.R. §1.47 provide:

§ 1.47 Filing when an inventor refuses to sign or cannot be reached.

(a) If a joint inventor refuses to join in an application for patent or cannot be found or reached after diligent effort, the application may be made by the other inventor on behalf of himself or herself and the nonsigning inventor. The oath or declaration in such an application must be accompanied by a petition including proof of the pertinent facts, the fee set forth in §1.17(h), and the last known address of the nonsigning inventor. The nonsigning inventor may subsequently join in the application by filing an oath or declaration complying with §1.63.

(b) Whenever all of the inventors refuse to execute an application for patent, or cannot be found or reached after diligent effort, a person to whom an inventor has assigned or agreed in writing to assign the invention, or who otherwise shows sufficient proprietary interest in the matter justifying such action, may make application for patent on behalf of and as agent for all the inventors. The oath or declaration in such an application must be accompanied by a petition including proof of the pertinent facts, a showing that such action is necessary to preserve the rights of the parties or to prevent irreparable damage, the fee set forth in §1.17(h), and the last known address of all of the inventors. An inventor may subsequently join in the application by filing an oath or declaration complying with §1.63.

© The Office will send notice of the filing of the application to all inventors who have not joined in the application at the address(es) provided in the petition under this section, and publish notice of the filing of the application in the *Official Gazette*. The Office may dispense with this notice provision in a continuation or divisional application, if notice regarding the filing of the prior application was given to the nonsigning inventor(s).

[47 Fed. Reg. 41275, Sept. 17, 1982, effective Oct. 1, 1982; 48 Fed. Reg. 2709, Jan. 20, 1983, effective Feb. 27, 1983; revised, 62 Fed. Reg. 53131, Oct. 10, 1997, effective Dec. 1, 1997; revised, 65 Fed. Reg. 54604, Sept. 8, 2000, effective Nov. 7, 2000]

order copies of all or any part thereof (at a prepaid cost per 37 C.F.R. §1.19) or make your position of record in the application. Alternatively, you may arrange to do any of the preceding through a registered patent attorney or agent presenting written authorization from you. If you care to join the application, counsel of record (see below) would presumably assist you. Joining in the application would entail the filing of an appropriate oath or declaration by you pursuant to 37 C.F.R. §1.63.

Requests for information regarding your application should be directed to the File Information Unit at (703) 308-2733.

Information regarding how to pay for and order a copy of the application, or a specific paper in the application, should be directed to Certification Division at (703) 308-9726 or toll-free: (800) 972-6382 (outside the Washington D.C. area).

While telephone inquiries regarding this decision may be directed to the undersigned at (571) 272-3214, it is noted that all practice before the Office is in writing (see: 37 C.F.R. §1.2[2]) and the proper authority for action on any matter in this regard are the statutes (35 U.S.C.), regulations (37 C.F.R.) and the commentary on policy (MPEP). Therefore, no telephone discussion may be controlling or considered authority for Petitioner's/Caller's action(s).

John J. Gillon, Jr.
Senior Attorney
Office of Petitions

Counsel of Record:
SHERIDAN ROSS PC
1560 BROADWAY
SUITE 1200
DENVER CO 80202

---

[2] The regulations at 37 C.F.R. §1.2 provide:

§1.2 Business to be transacted in writing.

All business with the Patent and Trademark Office should be transacted in writing.The personal attendance of applicants or their attorneys or agents at the Patent and Trademark Office is unnecessary. The action of the Patent and Trademark Office will be based exclusively on the written record in the Office. No attention will be paid to any alleged oral promise, stipulation,or understanding in relation to which there is disagreement or doubt.

UNITED STATES PATENT AND TRADEMARK OFFICE

Commissioner for Patents
United States Patent and Trademark Office
P.O. Box 1450
Alexandria, VA 22313-1450
www.uspto.gov

RYNDAK & SURI, LLP
200 WEST MADISON STREET
SUITE 2100
CHICAGO, IL 60606

COPY MAILED

NOV 25 2008

Applicant: Sus
Appl. No.: 11/413,352
Filing Date: April 28, 2006
Title: TEMPERATURE CONTROLLED FLUID BATH FOOD HOLDING APPARATUS
Attorney Docket No.: 25570-49150
Pub. No.: US 2007/0253645 A1
Pub. Date: November 1, 2007

This is a decision on the request for a corrected patent application publication under 37 CFR 1.221(b), received on December 13, 2007, for the above-identified application

The request is granted.

Applicant requests that the application be republished because the patent application publication contains material error, wherein Figure 13 was not published.

In support of the request for corrected publication, applicants submitted a copy of their stamped post card receipt on December 13, 2007. Applicants' stamped post card receipt acknowledges receipt in the United States Patent and Trademark Office on April 23, 2007 of inter alia, 3 pages preliminary amendment, and 12 sheets of drawings. The evidence has been considered and it is persuasive that 12 sheets of drawings including page 12, which is missing from the application were received on April 23, 2007.

The corrected patent application publication will be published in due course, unless the patent issues before the application is republished.

Inquiries relating to this matter may be directed to Mark Polutta at (571) 272-7709.

Mark Polutta
Senior Legal Advisor
Office of Patent Legal Administration
Office of the Deputy Commissioner
for Patent Examination Policy

UNITED STATES PATENT AND TRADEMARK OFFICE

UNITED STATES DEPARTMENT OF COMMERCE
United States Patent and Trademark Office
Address: COMMISSIONER FOR PATENTS
P.O. Box 1450
Alexandria, Virginia 22313-1450
www.uspto.gov

APPLICATION NO.	FILING DATE	FIRST NAMED INVENTOR	ATTORNEY DOCKET NO.	CONFIRMATION NO.
11/413,356	04/28/2006	James R. Petisce	DEXCOM.060A1	1462

7590 11/02/2007

KNOBBE MARTENS OLSON & BEAR LLP
2040 MAIN STREET
FOURTEENTH FLOOR
IRVINE, CA 92614

EXAMINER	

ART UNIT	PAPER NUMBER
1645	

NOTIFICATION DATE	DELIVERY MODE
11/02/2007	ELECTRONIC

DECISION GRANTING PETITION UNDER 37 CFR 1.138(d)

The declaration of express abandonment is recognized

This is in response to the petition under 37 CFR 1.138(d), requesting for a refund of any previously paid search fee and excess claims fee in the above-identified application.

The petition is granted.

The express abandonment is recognized. Any previously paid search fee and excess claims fee are hereby refunded.

Telephone inquiries should be directed to the Office of Data Management at (571) 272-4200.

Patent Publication Branch
Office of Data Management

Adjustment date: 11/01/2007 KKING1
05/02/2006 EAYALEW1 00000032 11413356
02 FC:2111 -250.00 OP

Repln. Ref: 11/01/2007 KKING1 0015272900
DA#:111410 Name/Number:11413356
FC: 9204 $250.00 CR

UNITED STATES PATENT AND TRADEMARK OFFICE

COMMISSIONER FOR PATENTS
UNITED STATES PATENT AND TRADEMARK OFFICE
P.O. BOX 1450
ALEXANDRIA, VA 22313-1450
www.uspto.gov

DRINKER BIDDLE & REATH LLP
ATTN: PATENT DOCKET DEPT.
191 N. WACKER DRIVE, SUITE 3700
CHICAGO IL 60606

COPY MAILED

OCT 3 1 2007

OFFICE OF PETITIONS

Applicant: Lester et al.
Appl. No.: 11/413,364
Filing Date: April 28, 2006
Title: DISPLAY RETRACT MECHANISM
Attorney Docket No.: P1812CON
Pub. No.: 2006/0203135 A1
Pub. Date: September 14, 2006

This is a decision on the request for corrected of patent application publication under 37 CFR 1.221(b), received on November 9, 2006, and copy received on October 7, 2007, for the above-identified application.

The request is granted.

The corrected patent application publication will be published in due course, unless the patent issues before the application is republished.

Inquiries relating to this matter may be directed to Mark O. Polutta at (703) 272-7709 (voice).

Mark O. Polutta
Senior Legal Advisor
Office of Patent Legal Administration
Office of the Deputy Commissioner
for Patent Examination Policy

UNITED STATES PATENT AND TRADEMARK OFFICE

Commissioner for Patents
United States Patent and Trademark Office
P.O. Box 1450
Alexandria, VA 22313-1450
www.uspto.gov

APPLICATION NUMBER	FILING/RECEIPT DATE	FIRST NAMED APPLICANT	ATTORNEY DOCKET NUMBER
11/413,373	04/27/2006	David A. Palsulich	108298727US1

PERKINS COIE LLP
PATENT-SEA
PO BOX 1247
SEATTLE WA 98111-1247

DATE MAILED: September 13, 2007

DECISION GRANTING PETITION UNDER 37 CFR 1.138(d)
The declaration of express abandonment is recognized

This is in response to the petition under 37 CFR 1.138(d) filed August 21, 2007, requesting for a refund of any previously paid search fee and excess claims fee in the above-identified application.

The petition is granted.

The express abandonment is recognized. Any previously paid search fee and excess claims fee are hereby refunded.

Any inquiries concerning this decision should be directed to the Pre-Grant Publication Division at (703) 605-4283.

Barbara J. Debnam
Pre-Grant Publication Division

UNITED STATES PATENT AND TRADEMARK OFFICE

Commissioner for Patents
United States Patent and Trademark Office
P.O. Box 1450
Alexandria, VA 22313-1450
www.uspto.gov

TIMOTHY F. MILLS
1177 WEST LOOP SOUTH
SUITE 400
HOUSTON TX 77027-9012

COPY MAILED

DEC 1 8 2006

OFFICE OF PETITIONS

In re Application of	:	
Schneider, Julian N.	:	
Application No. 11/413,378	:	ON PETITION
Filed: April 29, 2006	:	
Attorney Docket No. SCHJ.100US	:	

This is a decision on the petition under 37 CFR 1.102(c)(1), filed June 10, 2006, to make the above-identified application special based on applicant's age as set forth in M.P.E.P. § 708.02, Section IV.

The petition is **GRANTED**.

A grantable petition to make an application special under 37 CFR 1.102(c)(1) and MPEP § 708.02, Section IV: Applicant's Age must be accompanied by evidence showing that at least one of the applicants is 65 years of age, or more, such as a birth certificate or a statement by applicant. No fee is required.

The instant petition includes a copy of the applicant's birth certificate. Accordingly, the above-identified application has been accorded "special" status.

Telephone inquiries concerning this decision should be directed to the undersigned at 571-272-3206. All other inquiries concerning either the examination or status of the application should be directed to the Technology Center.

This matter is being referred to the Technology Center Art Unit 3691 for action on the merits commensurate with this decision.

Liana Walsh
Petitions Examiner
Office of Petitions

UNITED STATES PATENT AND TRADEMARK OFFICE

Commissioner for Patents
United States Patent and Trademark Office
P.O. Box 1450
Alexandria, VA 22313-1450
www.uspto.gov

TIMOTHY F. MILLS
1177 WEST LOOP SOUTH
SUITE 400
HOUSTON TX 77027-9012

COPY MAILED
DEC 18 2006
OFFICE OF PETITIONS

In re Application of :
Schneider, Julian N. :
Application No. 11/413,378 : ON PETITION
Filed: April 29, 2006 :
Attorney Docket No. SCHJ.100US :

This is a decision on the petition under 37 CFR 1.102(c)(1), filed June 10, 2006, to make the above-identified application special based on applicant's age as set forth in M.P.E.P. § 708.02, Section IV.

The petition is **GRANTED**.

A grantable petition to make an application special under 37 CFR 1.102(c)(1) and MPEP § 708.02, Section IV: Applicant's Age must be accompanied by evidence showing that at least one of the applicants is 65 years of age, or more, such as a birth certificate or a statement by applicant. No fee is required.

The instant petition includes a copy of the applicant's birth certificate. Accordingly, the above-identified application has been accorded "special" status.

Telephone inquiries concerning this decision should be directed to the undersigned at 571-272-3206. All other inquiries concerning either the examination or status of the application should be directed to the Technology Center.

This matter is being referred to the Technology Center Art Unit 3691 for action on the merits commensurate with this decision.

Liana Walsh
Petitions Examiner
Office of Petitions

RECEIVED
DEC 29 2006
OFFICE OF PETITIONS

UNITED STATES PATENT AND TRADEMARK OFFICE

Commissioner for Patents
United States Patent and Trademark Office
P.O. Box 1450
Alexandria, VA 22313-1450
www.uspto.gov

SENNIGER POWERS LLP
100 NORTH BROADWAY
17TH FLOOR
ST LOUIS MO 63102

MAILED

JUL 20 2010

OFFICE OF PETITIONS

In re Application of :
CRISWELL et al. :
Application No. 11/413,389 : ON APPLICATION FOR
Filed: 04/28/2006 : PATENT TERM ADJUSTMENT
Attorney Docket No. BII 7741 :

This is in response to the "PETITION FOR PATENT TERM ADJUSTMENT PURSUANT 37 CFR §1.705(d)" filed May 21, 2010, which is being treated as a petition under 37 CFR 1.705(b). Applicants submit that the correct patent term adjustment to be indicated on the patent is 848 days, not 546 days as calculated by the Office as of the mailing of the initial determination of patent term adjustment. Applicants seek this correction solely on the basis that the Office will take in excess of three years to issue this patent.

As the instant application for patent term adjustment requests reconsideration of the patent term adjustment as it relates to the Office's failure to issue the patent within three years of the filing date, the application for patent term adjustment under 37 CFR 1.705(b) is **DISMISSED as PREMATURE**.

Knowledge of the actual date the patent issues is required to calculate the amount, if any, of additional patent term patentees are entitled to for Office failure to issue the patent within three years. See 37 CFR 1.702(b). (This is true even where a request for continued examination (RCE) was filed). The computer will not undertake the § 1.702(b) calculation until the actual date of issuance of the patent has been determined. Likewise, the computer will not calculate any further Office delay under 37 CFR 1.702(a)(4) or applicant delay under 37 CFR

1.704(c)(10) until the actual date of issuance of the patent has been determined. As such, the Office cannot make a determination on the correctness of the patent term adjustment until the patent has issued.

Requesting reconsideration of the patent term adjustment to be indicated on the patent under 37 CFR 1.705(b) based on the initial determination of patent term adjustment and a projected issuance date of the patent (or even the filing date of the request for continued examination) is premature. Accordingly, it is appropriate to dismiss such a request as premature.

Rather than file an application for patent term adjustment under 37 CFR 1.705(b) contesting the 37 CFR 1.702(b) calculation at the time of the mailing of the notice of allowance, applicants are advised that they may wait until the time of the issuance of the patent and file a request for reconsideration of the patent term adjustment pursuant to 37 CFR 1.705(d). As the USPTO does not calculate the amount of time earned pursuant to 37 CFR 1.702(b) until the time of the issuance of the patent, the Office will consider any request for reconsideration of the patent term adjustment due to an error in the calculation of 37 CFR 1.702(b) to be timely if the request for reconsideration is filed within two months of the issuance of the patent. However, as to all other bases for contesting the initial determination of patent term adjustment received with the notice of allowance, applicants must timely file an application for patent term adjustment prior to the payment of the issue fee.[1]

The Office acknowledges the $200.00 fee set forth in 37 CFR 1.18(e) for consideration of the application for patent term adjustment under 37 CFR 1.705(b).

---

[1] For example, if applicants dispute both the calculation of patent term adjustment under 37 CFR 1.702(a)(1) for Office failure to mail a first Office action or notice of allowance not later than fourteen months after the date on which the application was filed, and under 37 CFR 1.702(b) for Office failure to issue a patent within three years of the actual filing date of the application, then applicants must still timely file an application for patent term adjustment prior to the payment of the issue fee to contest the calculation of Office delay in issuing a first Office action or notice of allowance. See 37 CFR 1.705(b) and 35 U.S.C. 154(b)(3)(B). A dispute as to the calculation of the § 1.702(a)(1) period raised on request for reconsideration of patent term adjustment under 37 CFR 1.705(d) will be dismissed as untimely filed.

Any request for reconsideration of the patent term adjustment indicated on the patent must be timely filed within two months after issuance pursuant to 37 CFR 1.705(d) and must include payment of the required fee under 37 CFR 1.18(e).

The Office of Data Management has been advised of this decision. This application is being referred to the Office of Data Management for issuance of the patent.

Telephone inquiries specific to this decision should be directed to the undersigned at (571) 272-3211.

Christina Tartera Donnell

Christina Tartera Donnell
Senior Petitions Attorney
Office of Petitions

UNITED STATES PATENT AND TRADEMARK OFFICE

Commissioner for Patents
United States Patent and Trademark Office
P.O. Box 1450
Alexandria, VA 22313-1450
www.uspto.gov

STETINA BRUNDA GARRED & BRUCKER
75 ENTERPRISE, SUITE 250
ALISO VIEJO, CA 92656

COPY MAILED

JUN 0 5 2007

OFFICE OF PETITIONS

In re Application of :
Charles E. Markley et al :
Application No. 11/413,398 : DECISION GRANTING PETITION
Filed: April 28, 2006 : UNDER 37 CFR 1.313(c)(2)
Attorney Docket No. SFCUT-018C :

This is a decision on the petition, filed June 1, 2007, under 37 CFR 1.313(c)(2) to withdraw the above-identified application from issue after payment of the issue fee.

The petition is **GRANTED**.

The above-identified application is withdrawn from issue for consideration of a submission under 37 CFR 1.114 (request for continued examination). See 37 CFR 1.313(c)(2).

Petitioner is advised that the issue fee paid on May 7, 2007 in the above-identified application cannot be refunded. If, however, the above-identified application is again allowed, petitioner may request that it be applied towards the issue fee required by the new Notice of Allowance.[1]

It is noted that the amendment submitted with this petition seeks to add a claim for priority to Application No. 10/931,562. It is further noted that this new claim for priority was not submitted within the time period specified in 37 CFR 1.78(a)(ii). If petitioner desires to claim priority to this prior-filed application, a petition under 37 CFR 1.78(a)(3) would be appropriate to accept an unintentionally delayed claim for priority.

Telephone inquiries should be directed to the undersigned at (571) 272-3218.

This matter is being referred to Technology Center AU 3723 for processing of the request for continued examination under 37 CFR 1.114 and for consideration of the concurrently filed amendment.

Frances Hicks
Petitions Examiner
Office of Petitions

C:\Documents and Settings\fhicks\My Documents\470\june10\413398.wpd

[1] *The request to apply the issue fee to the new Notice may be satisfied by completing and returning the new Part B – Fee(s) Transmittal Form (along with any balance due at the time of submission). Petitioner is advised that the Issue Fee Transmittal Form **must** be completed and timely submitted to avoid abandonment.*

UNITED STATES PATENT AND TRADEMARK OFFICE

COMMISSIONER FOR PATENTS
UNITED STATES PATENT AND TRADEMARK OFFICE
P.O. BOX 1450
ALEXANDRIA, VA 22313-1450
www.uspto.gov

STETINA BRUNDA GARRED & BRUCKER
75 ENTERPRISE, SUITE 250
ALISO VIEJO CA 92656

COPY MAILED

SEP 2 4 2007

OFFICE OF PETITIONS

In re Application of :
Markley et al. : DECISION ON PETITION
Application No. 11/413,398 : UNDER 37 CFR 1.78(a)(3)
Filed: April 28, 2006 :
Attorney Docket No. SFCUT-018C :

This is a decision on the PETITION UNDER 37 C.F.R. §1.78(a)(3), filed June 25, 2007, to accept an unintentionally delayed claim under 35 U.S.C. § 120 for the benefit of priority to prior-filed nonprovisional application No. 10/931,562. Given the amendment submitted, this petition is also being treated under 37 C.F.R. §1.78(a)(6) to accept an unintentionally delayed claim under 35 U.S.C. 119(e) for the benefit of priority to prior-filed provisional application No. 60/576,476. This petition was recently forwarded to the undersigned for consideration.

The petition is **GRANTED**.

A petition for acceptance of a claim for late priority under 37 CFR §§ 1.78(a)(3) and (a)(6) is only applicable to those applications filed on or after November 29, 2000. Further, the petition is appropriate only after the expiration of the period specified in 37 CFR §§ 1.78(a)(2)(ii) and (a)(5)(ii) respectively and must be filed during the pendency of the nonprovisional application. In addition, the petition under 37 CFR §§ 1.78(a)(3) and (a)(6) must be accompanied by:

(1) the reference required by 35 U.S.C. §§ 120 and 119(e) respectively and 37 CFR §§ 1.78(a)(2)(i) and (a)(5)(i)

respectively of the prior-filed application, unless previously submitted;

(2) the surcharge set forth in § 1.17(t); and

(3) a statement that the entire delay between the date the claim was due under 37 CFR §§ 1.78(a)(2)(ii) and (a)(5)(ii) respectively and the date the claim was filed was unintentional. The Director may require additional where there is a question whether the delay was unintentional.

A reference to the prior-filed application was included in an amendment to the first sentence of the specification following the title, filed June 1, 2007, as required by 37 CFR 1.78(a)(2)(iii). Applicants submitted a Request for Continued Examination (RCE)(with fee) along with the amendment.

The petition includes the required surcharge.

The statement that "the entire delay between the date the priority claim was due and the date the corrected priority claim of priority was filed was unintentional" is being construed to mean that the delay in filing both the claim under (a)(3) and (a)(6) was unintentional. If this interpretation is incorrect, petitioner must notify the Office.

All of the above requirements having been satisfied, the late claim for benefit of priority to the prior-filed applications under 35 U.S.C. §§ 120 and 119(e) is accepted as being unintentionally delayed.

The granting of the petition to accept the delayed benefit claim to the prior-filed applications under 37 CFR §§ 1.78(a)(3) and (a)(6) should not be construed as meaning that this application is entitled to the benefit of the filing date of the prior-filed applications. In order for this application to be entitled to the benefit of the prior-filed applications, all other requirements under 35 U.S.C. §§120 and 1.78(a)(1) and (a)(2) and under 35 U.S.C. §§119(e) and 1.78(a)(4) and (a)(5) must be met. Similarly, the fact that the corrected Filing Receipt accompanying this decision on petition includes the prior-filed application should not be construed as meaning that applicant is entitled to the claim for benefit of priority to the prior-filed applications noted thereon. Accordingly, the examiner will, in due course, consider this benefit claim and determine whether

the application is entitled to the benefit of the earlier filing date.

A corrected Filing Receipt, which includes the priority claim to the prior-filed applications, accompanies this decision on petition.

Any questions concerning this matter may be directed to the undersigned at (571) 272-3219. All other inquiries concerning either the examination procedures or status of the application should be directed to the Technology Center.

This application is being referred to Technology Center Art Unit 3723 for consideration by the examiner of the claim for benefit of priority under 35 U.S.C. §§ 120 and 119(e) of the prior-filed applications as set forth in the amendment filed June 1, 2007.

Nancy Johnson
Senior Petitions Attorney
Office of Petitions

ATTACHMENT: Corrected Filing Receipt

UNITED STATES PATENT AND TRADEMARK OFFICE

UNITED STATES DEPARTMENT OF COMMERCE
United States Patent and Trademark Office
Address: COMMISSIONER FOR PATENTS
P.O. Box 1450
Alexandria, Virginia 22313-1450
www.uspto.gov

APPL NO.	FILING OR 371(c) DATE	ART UNIT	FIL FEE REC'D	ATTY.DOCKET NO	TOT CLMS	IND CLMS
11/413,398	04/28/2006	3723	1875	SFCUT-018C	47	7

CONFIRMATION NO. 1072

CORRECTED FILING RECEIPT

7663
STETINA BRUNDA GARRED & BRUCKER
75 ENTERPRISE, SUITE 250
ALISO VIEJO, CA 92656

OC000000025974448

Date Mailed: 09/24/2007

Receipt is acknowledged of this nonprovisional patent application. The application will be taken up for examination in due course. Applicant will be notified as to the results of the examination. Any correspondence concerning the application must include the following identification information: the U.S. APPLICATION NUMBER, FILING DATE, NAME OF APPLICANT, and TITLE OF INVENTION. Fees transmitted by check or draft are subject to collection. Please verify the accuracy of the data presented on this receipt. **If an error is noted on this Filing Receipt, please write to the Office of Initial Patent Examination's Filing Receipt Corrections. Please provide a copy of this Filing Receipt with the changes noted thereon. If you received a "Notice to File Missing Parts" for this application, please submit any corrections to this Filing Receipt with your reply to the Notice. When the USPTO processes the reply to the Notice, the USPTO will generate another Filing Receipt incorporating the requested corrections (if appropriate).**

Applicant(s)

Charles E. Markley, Anaheim Hills, CA;
Deo M. Magakat, Colton, CA;

Power of Attorney: The patent practitioners associated with Customer Number **007663**.

Domestic Priority data as claimed by applicant

This application is a CON of 10/931,562 08/31/2004 PAT 7,163,010
which claims benefit of 60/576,476 06/03/2004

Foreign Applications

If Required, Foreign Filing License Granted: 05/19/2006

The country code and number of your priority application, to be used for filing abroad under the Paris Convention, is US11/413,398

Projected Publication Date: Not Applicable

Non-Publication Request: No

Early Publication Request: No

**** SMALL ENTITY ****

Title

SKID PLATE FOR CONCRETE SAW

Preliminary Class

125

PROTECTING YOUR INVENTION OUTSIDE THE UNITED STATES

Since the rights granted by a U.S. patent extend only throughout the territory of the United States and have no effect in a foreign country, an inventor who wishes patent protection in another country must apply for a patent in a specific country or in regional patent offices. Applicants may wish to consider the filing of an international application under the Patent Cooperation Treaty (PCT). An international (PCT) application generally has the same effect as a regular national patent application in each PCT-member country. The PCT process **simplifies** the filing of patent applications on the same invention in member countries, but **does not result** in a grant of "an international patent" and does not eliminate the need of applicants to file additional documents and fees in countries where patent protection is desired.

Almost every country has its own patent law, and a person desiring a patent in a particular country must make an application for patent in that country in accordance with its particular laws. Since the laws of many countries differ in various respects from the patent law of the United States, applicants are advised to seek guidance from specific foreign countries to ensure that patent rights are not lost prematurely.

Applicants also are advised that in the case of inventions made in the United States, the Director of the USPTO must issue a license before applicants can apply for a patent in a foreign country. The filing of a U.S. patent application serves as a request for a foreign filing license. The application's filing receipt contains further information and guidance as to the status of applicant's license for foreign filing.

Applicants may wish to consult the USPTO booklet, "General Information Concerning Patents" (specifically, the section entitled "Treaties and Foreign Patents") for more information on timeframes and deadlines for filing foreign patent applications. The guide is available either by contacting the USPTO Contact Center at 800-786-9199, or it can be viewed on the USPTO website at http://www.uspto.gov/web/offices/pac/doc/general/index.html.

For information on preventing theft of your intellectual property (patents, trademarks and copyrights), you may wish to consult the U.S. Government website, http://www.stopfakes.gov. Part of a Department of Commerce initiative, this website includes self-help "toolkits" giving innovators guidance on how to protect intellectual property in specific countries such as China, Korea and Mexico. For questions regarding patent enforcement issues, applicants may call the U.S. Government hotline at 1-866-999-HALT (1-866-999-4158).

LICENSE FOR FOREIGN FILING UNDER
Title 35, United States Code, Section 184
Title 37, Code of Federal Regulations, 5.11 & 5.15

GRANTED

The applicant has been granted a license under 35 U.S.C. 184, if the phrase "IF REQUIRED, FOREIGN FILING LICENSE GRANTED" followed by a date appears on this form. Such licenses are issued in all applications where the conditions for issuance of a license have been met, regardless of whether or not a license may be required as set forth in 37 CFR 5.15. The scope and limitations of this license are set forth in 37 CFR 5.15(a) unless an earlier license has been issued under 37 CFR 5.15(b). The license is subject to revocation upon written notification. The date indicated is the effective date of the license, unless an earlier license of similar scope has been granted under 37 CFR 5.13 or 5.14.

This license is to be retained by the licensee and may be used at any time on or after the effective date thereof unless it is revoked. This license is automatically transferred to any related applications(s) filed under 37 CFR 1.53(d). This license is not retroactive.

The grant of a license does not in any way lessen the responsibility of a licensee for the security of the subject matter as imposed by any Government contract or the provisions of existing laws relating to espionage and the national security or the export of technical data. Licensees should apprise themselves of current regulations especially with respect to certain countries, of other agencies, particularly the Office of Defense Trade Controls, Department of State (with respect to Arms, Munitions and Implements of War (22 CFR 121-128)); the Bureau of Industry and Security, Department of Commerce (15 CFR parts 730-774); the Office of Foreign Assets Control, Department of Treasury (31 CFR Parts 500+) and the Department of Energy.

NOT GRANTED

No license under 35 U.S.C. 184 has been granted at this time, if the phrase "IF REQUIRED, FOREIGN FILING LICENSE GRANTED" DOES NOT appear on this form. Applicant may still petition for a license under 37 CFR 5.12, if a license is desired before the expiration of 6 months from the filing date of the application. If 6 months has lapsed from the filing date of this application and the licensee has not received any indication of a secrecy order under 35 U.S.C. 181, the licensee may foreign file the application pursuant to 37 CFR 5.15(b).

UNITED STATES PATENT AND TRADEMARK OFFICE

Commissioner for Patents
United States Patent and Trademark Office
P.O. Box 1450
Alexandria, VA 22313-1450
www.uspto.gov

LOWELL ANDERSON
STETINA BRUNDA GARRED & BRUKER
75 ENTERPRISE, SUITE 250
ALISO VEIJO CA 92656

COPY MAILED

JUN 2 9 2009

OFFICE OF PETITIONS

In re Application of :
Charles E. Markley et al. :
Application No.11/413,398 : ON PETITION
Filed: April 28, 2006 :
Attorney Docket No. SFCUT-018C :

This is a decision on the petition under the unintentional provisions of 37 CFR 1.137(b), filed January 23, 2009, to revive the above-identified application.

The petition is **GRANTED**.

The above-identified application became abandoned for failure to reply within the meaning of 37 CFR 1.113 in timely manner to the final Office action mailed July 9, 2008 which set a shortened statutory period for reply of three (3) months. No extension of time pursuant to the provisions of 37 CFR 1.136(a) were obtained. Accordingly the above-identified application became abandoned October 9, 2008.

This application is being revived solely for purposes of continuity. As continuity has been established by this decision, the application is again abandoned in favor of continuing application No. 12/359,189, filed January 23, 2009.

Telephone inquiries concerning this decision should be directed to Newton Edwards at (571) 272-6052 or in his absence to the undersigned at (571) 272-7099.

David Bucci
Petitions Examiner
Office of Petitions

UNITED STATES PATENT AND TRADEMARK OFFICE

Commissioner for Patents
United States Patent and Trademark Office
P.O. Box 1450
Alexandria, VA 22313-1450
www.uspto.gov

HANSRA PATENT SERVICES
4525 GLEN MEADOWS PLACE
BELLINGHAM WA 98226

COPY MAILED
MAR 30 2007
OFFICE OF PETITIONS

RECEIVED
MAR 30 2007
OFFICE OF PETITIONS

CANCELLED

In re Application of
Stan **SHEPHERD**
Application No. 11/413,416
Filed: April 27, 2006
Attorney Docket No. Q00-1020-US2

DECISION ON PETITION
TO WITHDRAW
FROM RECORD

This is a decision on the Request to Withdraw as attorney or agent of record under 37 C.F.R. § 1.36(b), filed October 23, 2006.

The request is **APPROVED**.

A grantable request to withdraw as attorney/agent of record must be signed by every attorney/agent seeking to withdraw or contain a clear indication that one attorney is signing on behalf of another/others. A request to withdraw will not be approved unless at least 30 (thirty) days would remain between the date of approval and the later of the expiration date of a time to file a response or the expiration date of the maximum time period which can be extended under 37 C.F.R. § 1.136(a).

The request was signed by Tejpal S. Hansra on behalf of all attorneys of record. All attorneys/agents associated have been withdrawn. Applicant is reminded that there is no attorney of record at this time.

The request to change the correspondence of record is not acceptable as the requested correspondence address is not that of: (1) the first named signing inventor; or (2) an intervening assignee of the entire interest under 37 C.F.R 3.71. All future communications from the Office will be directed to the first named signing inventor at the first copied address below until otherwise properly notified by the applicant.

Telephone inquiries concerning this decision should be directed to the undersigned at 571-272-7253.

Monica A. Graves
Petitions Examiner
Office of Petitions

cc: **STAN SHEPHERD**
17020 HOLIDAY DRIVE
MORGAN HILL, CA 95037

cc: **SEAGATE TECHNOLOGY LLC**
INTELLECTUAL PROPERTY -- SHK2LG
1280 DISC DRIVE
SHAKOPEE, MN 55379

UNITED STATES PATENT AND TRADEMARK OFFICE

Commissioner for Patents
United States Patent and Trademark Office
P.O. Box 1450
Alexandria, VA 22313-1450
www.uspto.gov

TOWNSEND AND TOWNSEND AND CREW LLP
TWO EMBARCADERO CENTER
EIGHTH FLOOR
SAN FRANCISCO, CA 94111-3834

COPY MAILED

MAR 21 2007

OFFICE OF PETITIONS

In re Application of :
Mikhail A. Rakov et al :
Application No. 11/413,420 : DECISION GRANTING PETITION
Filed: April 28, 2006 : UNDER 37 CFR 1.313(c)(2)
Attorney Docket No. 025779-001700US :

This is a decision on the petition, filed March 19, 2007, under 37 CFR 1.313(c)(2) to withdraw the above-identified application from issue after payment of the issue fee.

The petition is **GRANTED**.

The above-identified application is withdrawn from issue for consideration of a submission under 37 CFR 1.114 (request for continued examination). See 37 CFR 1.313(c)(2).

Petitioner is advised that the issue fee paid on March 5, 2007 in the above-identified application cannot be refunded. If, however, the above-identified application is again allowed, petitioner may request that it be applied towards the issue fee required by the new Notice of Allowance.[1]

Telephone inquiries should be directed to the undersigned at (571) 272-3218.

This matter is being referred to Technology Center AU 2837 for processing of the request for continued examination under 37 CFR 1.114 and for consideration of the Information Disclosure Statement.

Frances Hicks
Petitions Examiner
Office of Petitions

C:\Documents and Settings\FHicks\My Documents\470\Mar10\413420.wpd

---

[1] *The request to apply the issue fee to the new Notice may be satisfied by completing and returning the new Part B – Fee(s) Transmittal Form (along with any balance due at the time of submission). Petitioner is advised that the Issue Fee Transmittal Form **must** be completed and timely submitted to avoid abandonment.*

UNITED STATES PATENT AND TRADEMARK OFFICE

Commissioner for Patents
United States Patent and Trademark Office
P.O. Box 1450
Alexandria, VA 22313-1450
www.uspto.gov

COOLEY GODWARD KRONISH, LLP
ATTN: PATENT GROUP
777-6TH STREET NW, SUITE 1100
WASHINGTON, DC 20001

COPY MAILED

FEB 0 4 2008

OFFICE OF PETITIONS

In re Application of	:	
ILIC, et al.	:	
Application No. 11/413,434	:	DECISION ON PETITION
Filed: April 28, 2006	:	TO WITHDRAW
Attorney Docket No. **ADEN-009/00US**	:	FROM RECORD
	:	

This is a decision on the Request to Withdraw as attorney or agent of record under 37 C.F.R. § 1.36(b), filed July 6, 2007.

The request is **NOT APPROVED** as moot.

A review of the file record indicates that the power of attorney to **COOLEY GODWARD KRONISH. LLP** has been revoked by the assignee of the patent application on July 24, 2007. Accordingly, the request to withdraw under 37 C.F.R. § 1.36(b) is moot.

All future communications from the Office will continue to be directed to the below-listed address until otherwise notified by applicant.

Telephone inquires concerning this decision should be directed to the undersigned at (571) 272-7253.

Monica A. Graves
Petitions Examiner
Office of Petitions

cc: **NEUGEBOREN LAW FIRM, PC**
1035 PEARL STREET, SUITE 400
BOULDER, CO 80302

UNITED STATES PATENT AND TRADEMARK OFFICE

Commissioner for Patents
United States Patent and Trademark Office
P.O. Box 1450
Alexandria, VA 22313-1450
www.uspto.gov

DICKE, BILLIG & CZAJA, PLLC
ATTN: MD MATTERS
FIFTH STREET TOWERS, SUITE 2250
100 SOUTH FIFTH STREET
MINNEAPOLIS MN 55402

COPY MAILED

AUG 2 4 2007

OFFICE OF PETITIONS

In re Application of :
Cross et al. :
Application No. 11/413,435 : ON PETITION
Filed: April 28, 2006 :
Attorney Docket No. M190.214.101/ :
P0025630.00

This is a decision on the petition under 37 C.F.R. § 1.137(b), filed August 1, 2007, to revive the above-identified application.

The petition is **GRANTED.**

The petition satisfies the conditions for revival pursuant to the provisions of 37 CFR 1.137(b) in that (1) the reply in the form of an Oath/Declaration and late surcharge; (2) the petition fee; and (3) the required statement of unintentional delay have been received. Accordingly, the response has been accepted as having been unintentionally delayed.

This matter is being referred to the Office of Initial Patent Examination for further processing.

Telephone inquiries regarding this decision should be directed to the undersigned at (571) 272-3206.

Liana Walsh
Petitions Examiner
Office of Petitions

UNITED STATES PATENT AND TRADEMARK OFFICE

Commissioner for Patents
United States Patent and Trademark Office
P.O. Box 1450
Alexandria, VA 22313-1450
www.uspto.gov

DICKE, BILLIG & CZAJA, PLLC
ATTN: MD MATTERS
FIFTH STREET TOWERS, SUITE 2250
100 SOUTH FIFTH STREET
MINNEAPOLIS MN 55402

COPY MAILED

AUG 2 4 2007

OFFICE OF PETITIONS

In re Application of :
Cross et al. :
Application No. 11/413,437 : ON PETITION
Filed: April 28, 2006 :
Attorney Docket No. M190.212.101/ :
P0024627.00

This is a decision on the petition under 37 C.F.R. § 1.137(b), filed August 1, 2007, to revive the above-identified application.

The petition is **GRANTED.**

The petition satisfies the conditions for revival pursuant to the provisions of 37 CFR 1.137(b) in that (1) the reply in the form of an Oath/Declaration and late surcharge; (2) the petition fee; and (3) the required statement of unintentional delay have been received. Accordingly, the response has been accepted as having been unintentionally delayed.

This matter is being referred to the Office of Initial Patent Examination for further processing.

Telephone inquiries regarding this decision should be directed to the undersigned at (571) 272-3206.

Liana Walsh
Petitions Examiner
Office of Petitions

UNITED STATES PATENT AND TRADEMARK OFFICE

Commissioner for Patents
United States Patent and Trademark Office
P.O. Box 1450
Alexandria, VA 22313-1450
www.uspto.gov

DICKE, BILLIG & CZAJA, PLLC
ATTN: MD MATTERS
FIFTH STREET TOWERS, SUITE 2250
100 SOUTH FIFTH STREET
MINNEAPOLIS MN 55402

COPY MAILED

AUG 2 4 2007

OFFICE OF PETITIONS

In re Application of :
Cross, Thomas E. :
Application No. 11/413,440 : ON PETITION
Filed: April 28, 2006 :
Attorney Docket No. M190.213.101/ :
P0024629.00

This is a decision on the petition under 37 C.F.R. § 1.137(b), filed August 1, 2007, to revive the above-identified application.

The petition is **GRANTED.**

The petition satisfies the conditions for revival pursuant to the provisions of 37 CFR 1.137(b) in that (1) the reply in the form of an Oath/Declaration and late surcharge; (2) the petition fee; and (3) the required statement of unintentional delay have been received. Accordingly, the response has been accepted as having been unintentionally delayed.

This matter is being referred to the Office of Initial Patent Examination for further processing.

Telephone inquiries regarding this decision should be directed to the undersigned at (571) 272-3206.

Liana Walsh
Petitions Examiner
Office of Petitions

UNITED STATES PATENT AND TRADEMARK OFFICE

Commissioner for Patents
United States Patent and Trademark Office
P.O. Box 1450
Alexandria, VA 22313-1450
www.uspto.gov

MAILED

AUG 09 2006

Director's Office
Group 3700

MARK D MILLER
KIMBLE, MACMICHAEL & UPTON
5260 NORTH PALM AVENUE
SUITE 221
FRESNO CA 93704

In re Application of:
AINLEY, FRANK JR.
Serial No.: 11/413,445
Filed: April 28, 2006
Docket: 10571.00
Title: ANIMAL INSEMINATION SHEATH AND METHODS OF USE

DECISION ON REQUEST FOR PETITION TO MAKE SPECIAL FOR NEW APPLICATION UNDER 37 C.F.R. § 1.102 & M.P.E.P. § 708.02 (VIII)

This is a decision on the petition filed on April 28, 2006 to make the above-identified application special under the accelerated examination procedure set forth in MPEP § 708.02(VIII) and in accordance with 37 C.F.R. § 1.102(d).

The petition to make the application special is **DISMISSED**.

In support of the petition, petitioner provides: a) the applicable fee; b) a statement that all claims are directed to a single invention, or if the Office determines that all presented claims are not obviously directed to a single invention, applicant will make an election without traverse; c) a statement that a search has been made on the USPTO database in Class 73, Subclasses 588, 644; Class 119, Subclasses 14.21, 174, 860; Class 128, Subclasses 1 R, 220, 221, 224, 234, 235, 237, 749, 756, 759; Class 206, Subclasses 363-365, 438-440, 601-608; Class 600, Subclasses 33-35, 437, 459, 461, 462; Class 604, Subclasses 3, 54, 55, 93, 115, 159, 176, 181, 184, 187, 191, 192, 198-201, 205, 211, 218, 224, 236, 238, 240, 263, 264, 275, 510, 515, 906; d) a copy of each reference; and e) a detailed discussion of the references.

For accelerated examination under MPEP § 708.02(VIII) in accordance with 37 C.F.R. § 1.102(d), a showing of the following is required: a) the applicable petition fee; b) all claims are directed to a single invention, or if the Office determines that all the claims presented are not obviously directed to a single invention, applicant will make an election without traverse; c) a statement that a pre-examination search was made, listing the field of search by class and subclass; d) a copy of each of the references deemed most closely related to the claimed subject matter; and e) a detailed discussion of the references pointing out with the particularity required by 37 CFR 1.111 (b) and (c), how the claimed subject matter is distinguishable over the references.

The requirements of MPEP § 708.02(VIII)(a), (b), (c) and (d) are considered to have been met. However, the petition does not meet the requirements of MPEP § 708.02(VIII)(e).

Regarding the requirement of MPEP § 708.02(VIII)(e), 37 CFR § 1.111 (b) states "[a] general allegation that the claims define a patentable invention without specifically pointing out how the language of the claims patentably distinguishes them from the references does not comply with the requirements of this section." 37 CFR § 1.111 (c) states in part "the applicant or patent owner must clearly point out the patentable novelty which he or she thinks the claims present in view of the state of the art disclosed by the references cited or the objections made." The applicant provides a discussion of the references cited but does not point out the particular language that distinguishes the independent claims 1, 10, 12, 14, 15, 18, and 21 from these references. The applicant's general allegations that the invention is patentable over the references runs contrary to 37 CFR § 1.111 (b), which does not allow for general allegations. *Each* independent claim should be compared with each reference, and the patentable novelty in *each* independent claim relative to each reference must be clearly pointed out. Because the petition does not point out the specific language in each independent claim that distinguishes over each reference, it fails to meet the requirements of MPEP § 708.02(VIII)(e).

While Technology Center Directors may have granted petitions that do not comply with the detailed discussion requirement of the Accelerated Examination procedure, Technology Center Director decisions on petitions are not binding precedent of the Patent Examining Corps, and the application of an improper standard in certain cases does not require the Office to continue to apply the improper standard in all cases. *See In re The Boulevard Entertainment, Inc.*, 334 F.3d 1336, 1343, 67 USPQ2d 1475, 1480 (Fed. Cir. 2003).

For the above-mentioned reasons, the petition is dismissed. The application will, therefore, be taken up by the examiner for action in its regular turn.

Any request for reconsideration of this decision must be submitted within 2 (two) months of the date of this decision in order to be considered timely. Any request for reconsideration must provide a detailed discussion of each reference that clearly points out the specific language in each independent claim that distinguishes over the reference.

Any inquiry regarding this decision should be directed to Henry Yuen, Special Program Examiner, at (571) 272-4856.

Frederick R. Schmidt, Director
Technology Center 3700

UNITED STATES PATENT AND TRADEMARK OFFICE

UNITED STATES DEPARTMENT OF COMMERCE
United States Patent and Trademark Office
Address: COMMISSIONER FOR PATENTS
P.O. Box 1450
Alexandria, Virginia 22313-1450
www.uspto.gov

APPL NO.	FILING OR 371 (c) DATE	ART UNIT	FIL FEE REC'D	ATTY.DOCKET NO	DRAWINGS	TOT CLMS	IND CLMS
11/413,488	04/27/2006	2876	600	66532-5005	14	13	4

CONFIRMATION NO. 9946

24574
JEFFER, MANGELS, BUTLER & MARMARO, LLP
1900 AVENUE OF THE STARS, 7TH FLOOR
LOS ANGELES, CA 90067

CORRECTED FILING RECEIPT

OC000000019262641

Date Mailed: 06/14/2006

Receipt is acknowledged of this regular Patent Application. It will be considered in its order and you will be notified as to the results of the examination. Be sure to provide the U.S. APPLICATION NUMBER, FILING DATE, NAME OF APPLICANT, and TITLE OF INVENTION when inquiring about this application. Fees transmitted by check or draft are subject to collection. Please verify the accuracy of the data presented on this receipt. **If an error is noted on this Filing Receipt, please mail to the Commissioner for Patents P.O. Box 1450 Alexandria Va 22313-1450. Please provide a copy of this Filing Receipt with the changes noted thereon. If you received a "Notice to File Missing Parts" for this application, please submit any corrections to this Filing Receipt with your reply to the Notice. When the USPTO processes the reply to the Notice, the USPTO will generate another Filing Receipt incorporating the requested corrections (if appropriate).**

Applicant(s)

Fred E. Goldring, Beverly Hills, CA;
Kenneth B. Hertz, Beverly Hills, CA;
Phillip Sandhaus, Beverly Hills, CA;
David W. Schultze, Pasadena, CA;

Power of Attorney: None

Domestic Priority data as claimed by applicant

Foreign Applications
If Required, Foreign Filing License Granted: 05/19/2006

The country code and number of your priority application, to be used for filing abroad under the Paris Convention, is US11/413,488

Projected Publication Date: To Be Determined - pending completion of Missing Parts

Non-Publication Request: No

Early Publication Request: No

**** SMALL ENTITY ****

Title

Interactive kiosk and method for vending items using same

Preliminary Class

235

PROTECTING YOUR INVENTION OUTSIDE THE UNITED STATES

Since the rights granted by a U.S. patent extend only throughout the territory of the United States and have no effect in a foreign country, an inventor who wishes patent protection in another country must apply for a patent in a specific country or in regional patent offices. Applicants may wish to consider the filing of an international application under the Patent Cooperation Treaty (PCT). An international (PCT) application generally has the same effect as a regular national patent application in each PCT-member country. The PCT process **simplifies** the filing of patent applications on the same invention in member countries, but **does not result** in a grant of "an international patent" and does not eliminate the need of applicants to file additional documents and fees in countries where patent protection is desired.

Almost every country has its own patent law, and a person desiring a patent in a particular country must make an application for patent in that country in accordance with its particular laws. Since the laws of many countries differ in various respects from the patent law of the United States, applicants are advised to seek guidance from specific foreign countries to ensure that patent rights are not lost prematurely.

Applicants also are advised that in the case of inventions made in the United States, the Director of the USPTO must issue a license before applicants can apply for a patent in a foreign country. The filing of a U.S. patent application serves as a request for a foreign filing license. The application's filing receipt contains further information and guidance as to the status of applicant's license for foreign filing.

Applicants may wish to consult the USPTO booklet, "General Information Concerning Patents" (specifically, the section entitled "Treaties and Foreign Patents") for more information on timeframes and deadlines for filing foreign patent applications. The guide is available either by contacting the USPTO Contact Center at 800-786-9199, or it can be viewed on the USPTO website at http://www.uspto.gov/web/offices/pac/doc/general/index.html.

For information on preventing theft of your intellectual property (patents, trademarks and copyrights), you may wish to consult the U.S. Government website, http://www.stopfakes.gov. Part of a Department of Commerce initiative, this website includes self-help "toolkits" giving innovators guidance on how to protect intellectual property in specific countries such as China, Korea and Mexico. For questions regarding patent enforcement issues, applicants may call the U.S. Government hotline at 1-866-999-HALT (1-866-999-4158).

LICENSE FOR FOREIGN FILING UNDER
Title 35, United States Code, Section 184
Title 37, Code of Federal Regulations, 5.11 & 5.15

GRANTED

The applicant has been granted a license under 35 U.S.C. 184, if the phrase "IF REQUIRED, FOREIGN FILING LICENSE GRANTED" followed by a date appears on this form. Such licenses are issued in all applications where the conditions for issuance of a license have been met, regardless of whether or not a license may be required as set forth in 37 CFR 5.15. The scope and limitations of this license are set forth in 37 CFR 5.15(a) unless an earlier license has been issued under 37 CFR 5.15(b). The license is subject to revocation upon written notification. The date indicated is the effective date of the license, unless an earlier license of similar scope has been granted under 37 CFR 5.13 or 5.14.

This license is to be retained by the licensee and may be used at any time on or after the effective date thereof

unless it is revoked. This license is automatically transferred to any related applications(s) filed under 37 CFR 1.53(d). This license is not retroactive.

The grant of a license does not in any way lessen the responsibility of a licensee for the security of the subject matter as imposed by any Government contract or the provisions of existing laws relating to espionage and the national security or the export of technical data. Licensees should apprise themselves of current regulations especially with respect to certain countries, of other agencies, particularly the Office of Defense Trade Controls, Department of State (with respect to Arms, Munitions and Implements of War (22 CFR 121-128)); the Bureau of Industry and Security, Department of Commerce (15 CFR parts 730-774); the Office of Foreign Assets Control, Department of Treasury (31 CFR Parts 500+) and the Department of Energy.

NOT GRANTED

No license under 35 U.S.C. 184 has been granted at this time, if the phrase "IF REQUIRED, FOREIGN FILING LICENSE GRANTED" DOES NOT appear on this form. Applicant may still petition for a license under 37 CFR 5.12, if a license is desired before the expiration of 6 months from the filing date of the application. If 6 months has lapsed from the filing date of this application and the licensee has not received any indication of a secrecy order under 35 U.S.C. 181, the licensee may foreign file the application pursuant to 37 CFR 5.15(b).

UNITED STATES PATENT AND TRADEMARK OFFICE

COMMISSIONER FOR PATENTS
UNITED STATES PATENT AND TRADEMARK OFFICE
P.O. BOX 1450
ALEXANDRIA, VA 22313-1450
www.uspto.gov

PATTERSON AND SHERIDAN, LLP
3040 POST OAK BOULEVARD, SUITE 1500
HOUSTON, TX 77056

COPY MAILED
DEC 05 2008

Applicant: Du, et al
Appl. No.: 11/413,493
Filing Date: April 27, 2006
Title: METHOD AND APPARATUS FOR ELECTROCHEMICAL MECHANICAL POLISHING OF CU WITH HIGHER VELOCITY FOR BETTER SURFACE FINISH AND HIGHER REMOVAL RATE DURING CLEANING
Attorney Docket No.: APPM/004100.P16/CMP/CMP
Pub. No.: US 2007/0251832 A1
Pub. Date: November 1, 2007

This is a decision on the request for a corrected patent application publication under 37 CFR 1.221(b), received on December 18, 2007, for the above-identified application

The request is dismissed.

Applicant requests that the application be republished because the patent application publication contains material errors, wherein the priority data in the preliminary amendment of August 9, 2007 was not published.

37 CFR 1.221 (b) is applicable "only when the Office makes **a material mistake** which is apparent from Office records.... Any request for a corrected publication or revised patent application publication other than provided as provided in paragraph (a) of this section must be filed within two months from the date of the patent application publication. This period is not extendable." A material mistake must affect the public's ability to appreciate the technical disclosure of the patent application publication, to determine the scope of the patent application publication, or to determine the scope of the provisional rights that an applicant may seek to enforce upon issuance of a patent. [1]

The error noted by requestor with respect to the preliminary amendment is not an Office error. The patent application publication does not include a mistake regarding the failure to include the preliminary amendment to the priority data in the publication by the Office because preliminary amendment received on August 9, 2007 includes an incorporation by reference statement. Since the amendment includes new matter, the amendment was properly not entered.

[1] Changes to Implement Eighteen-Month Publication of Patent Applications, 65 FR 57023, 57038 (Sept. 20, 2000), 1239, Off. Gaz. Pat. Office Notices 63, 75 (Oct. 10, 2000) (final rule).

An incorporation by reference statement added after an application's filing date is not effective because no new matter can be added to an application after its filing date (see 35 U.S.C. 132(a)). If an incorporation by reference statement is included in an amendment to the specification to add a benefit claim after the filing date of the application, the amendment would not be proper. When a benefit claim is submitted after the filing of an application, the reference to the prior application cannot include an incorporation by reference statement of the prior application unless an incorporation by reference statement of the prior application was presented upon filing of the application. See Dart Indus. v. Banner, 636 F.2d 684, 207 USPQ 273 (C.A.D.C. 1980). See MPEP 201.11(III)(f).

To make a benefit/priority claim, 37 CFR 1.78 in summary requires that the benefit claim to an earlier filed application be contained in the first sentence of the application or be submitted in an amendment or application data sheet within the required time frame within the later of four months from the actual filing date or the date on which the national stage commenced, or sixteen months from the filing date of the prior-filed application. According to 37 CFR 1.55, the priority claim must identify the foreign application and filing date, within the required time frame within the later of four months from the actual filing date or the date on which the national stage commenced, or sixteen months from the filing date of the prior-filed application. [3] Since a proper benefit claim to the earlier filed application was not made within the required time period, it was not properly published on the patent application publication. See MPEP 201.11.

In order to make a late benefit claim to the earlier filed applications, applicant must submit a petition to accept an unintentionally delayed claim under 35 U.S.C. 119 and 120 for the benefit of the earlier filed applications. The petition must include 1) the surcharge ($1,410) set forth in 37 CFR 1.14(t) and 2) a statement that the entire delay between the date the claim was due under paragraph (a)(5) of this section and the date the claim was filed was unintentional. The petition must also include a proper reference (amendment) to the prior applications in order for the petition to be granted.

Inquiries relating to this matter may be directed to Mark Polutta at (571) 272-7709.

Mark Polutta
Senior Legal Advisor
Office of Patent Legal Administration
Office of the Deputy Commissioner
for Patent Examination Policy

[3] See Claiming the Benefit of a Prior-Filed Application under 35 U.S.C. §§ 119(e), 120, 121, and 365(c), 1268 Off. Gaz. Pat. Office Notices 89 (March 18, 2003).

UNITED STATES PATENT AND TRADEMARK OFFICE

Commissioner for Patents
United States Patent and Trademark Office
P.O. Box 1450
Alexandria, VA 22313-1450
www.uspto.gov

APPLICATION NUMBER	FILING/RECEIPT DATE	FIRST NAMED APPLICANT	ATTORNEY DOCKET NUMBER
11/413,501	04/28/2006	Kevin G. Donohoe	2269-6892.2US (99-0128.02

TRASK BRITT, P.C./ MICRON TECHNOLOGY
P.O. BOX 2550
SALT LAKE CITY UT 84110

DATE MAILED: September 20, 2007

DECISION GRANTING PETITION UNDER 37 CFR 1.138(d)
The declaration of express abandonment is recognized

This is in response to the petition under 37 CFR 1.138(d) filed August 15, 2007, requesting for a refund of any previously paid search fee and excess claims fee in the above-identified application.

The petition is granted.

The express abandonment is recognized. Any previously paid search fee and excess claims fee are hereby refunded.

Any inquiries concerning this decision should be directed to the Pre-Grant Publication Division at (703) 605-4283.

Barbara J. Debnam
Pre-Grant Publication Division

UNITED STATES PATENT AND TRADEMARK OFFICE

Commissioner for Patents
United States Patent and Trademark Office
P.O. Box 1450
Alexandria, VA 22313-1450
www.uspto.gov

COPY MAILED

JAN 0 7 2008

OFFICE OF PETITIONS

NEXSEN PRUET, LLC
P.O. BOX 10648
GREENVILLE SC 29603

In re Application of :
PATEL, Gordhanbhai N. :
Application No. 11/413,505 : DECISION ON PETITION
Filed: April 28, 2006 : TO MAKE SPECIAL UNDER
Attorney Docket No. **27845-30** : 37 CFR 1.102(c)(1)
:

This is a decision on the petition under 37 CFR 1.102(c)(1), filed December 4, 2007, to make the above-identified application special based on applicant's age as set forth in M.P.E.P. § 708.02, Section IV.

The petition is **GRANTED.**

A grantable petition to make an application special under 37 CFR 1.102(c)(1) and MPEP § 708.02, Section IV: Applicant's Age must be accompanied by evidence showing that at least one of the applicants is 65 years of age, or more, such as a birth certificate or a statement by applicant. No fee is required

The instant petition includes the statement of registered attorney Joseph Guy (registration number 35,172), attesting to the age of inventor Dr. Gordhanbhai Patel. Accordingly, the above-identified application has been accorded "special" status.

Inquiries concerning either the examination or status of the application should be directed to the Technology Center at 571-272-2800.

Telephone inquiries concerning this decision should be directed to the undersigned at 571-272-7253.

The application is being forwarded to the Technology Center Art Unit 2884 for action on the merits commensurate with this decision.

Monica A. Graves
Petitions Examiner
Office of Petitions

UNITED STATES PATENT AND TRADEMARK OFFICE

Commissioner for Patents
United States Patent and Trademark Office
P.O. Box 1450
Alexandria, VA 22313-1450
www.uspto.gov

MAILED

JUN 08 2009

OFFICE OF PETITIONS

PHILIP S. JOHNSON
JOHNSON & JOHNSON
ONE JOHNSON & JOHNSON PLAZA
NEW BRUNSWICK NJ 08933-7003

In re Application of :
Chen et al. :
Application No. 11/413,561 :
Filed: April 28, 2006 : DECISION ON REQUEST FOR
Attorney Docket No. CEN5094 USA : RECONSIDERATION OF
NP : PATENT TERM ADJUSTMENT
Title: Anti-IL-6 Antibodies, :
Compositions, Methods and Uses :

This is a decision on the "REQUEST FOR RECONSIDERATION OF PATENT TERM ADJUSTMENT REDUCED PURSUANT TO §1.704(b) (37 CFR § 1.705 (b))," filed April 28, 2009. Applicants request that the patent term adjustment at the time of the mailing of the Notice of Allowance be corrected from zero (0) days to two hundred eighty-two (282) days.

To the extent that the instant application for patent term adjustment requests reconsideration of the patent term adjustment as it relates to the Office's failure to issue the patent within 3 years of the filing date, a decision is being **held in abeyance** until after the actual patent date. Knowledge of the actual date the patent issues is required to calculate the amount, if any, of additional patent term patentee is entitled to for Office failure to issue the patent within 3 years. See § 1.703(b).

Patentee is given **TWO (2) MONTHS** from the issue date of the patent to file a written request for reconsideration of the patent term adjustment for Office failure to issue the patent within 3 years. A copy of this decision should accompany the request. Patentee may seek such consideration without payment of an additional fee. However, as to all other bases for seeking reconsideration of the patent term adjustment indicated in the patent, all requirements of § 1.705(d) must be met. Requests for reconsideration on other bases must be timely filed and must include payment of the required fee.

The application for patent term adjustment is **GRANTED** to the extent indicated herein.

The Office has updated the PAIR screen to reflect that the correct Patent Term Adjustment (PTA) determination at the time of the mailing of the Notice of Allowance is TWO HUNDRED EIGHTY-TWO (282) days. A copy of the updated PAIR screen, showing the correct determination, is enclosed.

On February 6, 2009, the Office mailed the Determination of Patent Term Adjustment under 35 U.S.C. 154(b) in the above-identified application. The Notice stated that the patent term adjustment (PTA) to date is 0 days. The instant application for patent term adjustment was timely filed[1]. Applicants dispute the reduction of 185 and 126 days of PTA for applicants' delay in filing supplemental responses on May 16, 2008 and November 21, 2008. Applicants state that these responses were filed at the request of the examiner.

The record supports a conclusion that in connection with the interviews of May 15, 2008 and November 19, 2008, the examiner, within the meaning of § 1.704(c) (8), expressly requested the supplemental replies. Accordingly, no reduction is warranted.

In view thereof, the correct determination of patent term adjustment at the time of the mailing of the notice of allowance is TWO HUNDRED EIGHTY-TWO (282) days.

Petitioner is reminded that if an application is entitled to an adjustment under 35 U.S.C. 154(b)(1)(B), the entire period during which the application was pending (except for periods excluded under 35 U.S.C. 154(b)(1)(B)(i)-(iii)), and not just the period beginning three years after the actual filing date of the application, is the period of delay under 35 U.S.C. 154(b)(1)(B) in determining whether periods of delay overlap under 35 U.S.C. 154(b)(2)(A). Thus, any days of delay for Office issuance of the patent more than 3 years after the filing date of the application which overlap with the days of patent term adjustment accorded prior to the issuance of the patent will not result in any additional patent term adjustment. See 35 U.S.C. 154(b)(1)(B), 35 U.S.C. 154(b)(2)(A), and 37 CFR § 1.703(f). See also *Revision of Patent Term Extension and Patent*

---

[1] PALM records indicate that the Issue Fee was also received on May 5, 2009.

Term Adjustment Provisions; Final Rule, 69 Fed. Reg. 21704 (April 22, 2004).

Receipt of the $200.00 fee set forth in 37 CFR 1.18(e) is acknowledged. No additional fees are required.

The Office will forward the file to the Office of Data Management for issuance of the patent.

Telephone inquiries specific to this matter should be directed to Petitions Attorney Charlema Grant at (571) 272-3215.

Kery A. Fries

Kery Fries
Senior Legal Advisor Attorney
Office of Patent Legal Administration

Enclosure: Copy of Revised PAIR Screen

PALM INTRANET

Day : Friday
Date: 6/5/2009
Time: 13:57:16

PTA Calculations for Application: 11/413561			
Application Filing Date:	04/28/2006	PTO Delay (PTO):	282
Issue Date of Patent:		Three Years:	0
Pre-Issue Petitions:	0	Applicant Delay (APPL):	311
Post-Issue Petitions:	0	Total PTA (days):	282
PTO Delay Adjustment:	311		

File Contents History

Number	Date	Contents Description	PTO	APPL	START
69	06/05/2009	ADJUSTMENT OF PTA CALCULATION BY PTO	185		
68	06/05/2009	ADJUSTMENT OF PTA CALCULATION BY PTO	126		
59	02/06/2009	MAIL NOTICE OF ALLOWANCE	80		47
58	01/23/2009	DOCUMENT VERIFICATION			
57	01/23/2009	ISSUE REVISION COMPLETED			
56	01/23/2009	NOTICE OF ALLOWANCE DATA VERIFICATION COMPLETED			
55	01/23/2009	CASE DOCKETED TO EXAMINER IN GAU			
54	01/23/2009	EXAMINER'S AMENDMENT COMMUNICATION			
53	01/21/2009	NOTICE OF ALLOWABILITY			
52	12/01/2008	DATE FORWARDED TO EXAMINER			
51	11/21/2008	SUPPLEMENTAL RESPONSE		126	47
50	11/19/2008	MAIL EXAMINER INTERVIEW SUMMARY (PTOL - 413)			
49	11/17/2008	EXAMINER INTERVIEW SUMMARY RECORD (PTOL - 413)			
48	11/17/2008	DATE FORWARDED TO EXAMINER			
47	07/18/2008	RESPONSE AFTER NON-FINAL ACTION			
46	07/02/2008	MAIL EXAMINER INTERVIEW SUMMARY (PTOL - 413)			
45	06/30/2008	EXAMINER INTERVIEW SUMMARY RECORD (PTOL - 413)			
44	06/17/2008	MAIL EXAMINER INTERVIEW SUMMARY (PTOL - 413)			
43	06/17/2008	MAIL NON-FINAL REJECTION	96		30
42	06/16/2008	NON-FINAL REJECTION			
41	01/17/2008	INFORMATION DISCLOSURE STATEMENT CONSIDERED			

40	06/02/2008	EXAMINER INTERVIEW SUMMARY RECORD (PTOL - 413)			
39	01/17/2008	INFORMATION DISCLOSURE STATEMENT (IDS) FILED			
38	05/28/2008	DATE FORWARDED TO EXAMINER			
37	05/16/2008	SUPPLEMENTAL RESPONSE		185	30
36	05/15/2008	MAIL EXAMINER INTERVIEW SUMMARY (PTOL - 413)			
35	05/13/2008	EXAMINER INTERVIEW SUMMARY RECORD (PTOL - 413)			
34	08/03/2007	INFORMATION DISCLOSURE STATEMENT CONSIDERED			
33	01/17/2008	INFORMATION DISCLOSURE STATEMENT CONSIDERED			
32	01/17/2008	INFORMATION DISCLOSURE STATEMENT CONSIDERED			
31	05/08/2008	DATE FORWARDED TO EXAMINER			
30	11/13/2007	RESPONSE TO ELECTION / RESTRICTION FILED			
28	01/17/2008	INFORMATION DISCLOSURE STATEMENT (IDS) FILED			
27	01/17/2008	INFORMATION DISCLOSURE STATEMENT (IDS) FILED			
26	10/12/2007	MAIL RESTRICTION REQUIREMENT	106		-1
25	10/11/2007	REQUIREMENT FOR RESTRICTION / ELECTION			
24	08/03/2007	REFERENCE CAPTURE ON IDS			
22	08/03/2007	INFORMATION DISCLOSURE STATEMENT (IDS) FILED			
21	08/03/2007	INFORMATION DISCLOSURE STATEMENT (IDS) FILED			
20	07/12/2007	CASE DOCKETED TO EXAMINER IN GAU			
19	08/11/2006	IFW TSS PROCESSING BY TECH CENTER COMPLETE			
18	07/17/2006	NEW OR ADDITIONAL DRAWING FILED			
17	08/10/2006	CASE DOCKETED TO EXAMINER IN GAU			
16	08/09/2006	APPLICATION RETURN FROM OIPE			
15	08/10/2006	APPLICATION IS NOW COMPLETE			
14	08/09/2006	APPLICATION RETURN TO OIPE			
13	08/09/2006	APPLICATION DISPATCHED FROM OIPE			
12	08/09/2006	APPLICATION IS NOW COMPLETE			
11	07/17/2006	ADDITIONAL APPLICATION FILING FEES			

10	07/17/2006	APPLICANT HAS SUBMITTED NEW DRAWINGS TO CORRECT CORRECTED PAPERS PROBLEMS			
8	05/23/2006	CORRECTED PAPER			
7	05/11/2006	CRF IS GOOD TECHNICALLY / ENTERED INTO DATABASE			
6	05/10/2006	CLEARED BY L&R (LARS)			
5	05/10/2006	REFERRED TO LEVEL 2 (LARS) BY OIPE CSR			
4	05/10/2006	CASE CLASSIFIED BY OIPE			
3	05/08/2006	IFW SCAN & PACR AUTO SECURITY REVIEW			
2	04/28/2006	CRF DISK HAS BEEN RECEIVED BY PREEXAM / GROUP / PCT			
1	04/28/2006	INITIAL EXAM TEAM NN			

Search Another: Application# [ ] Search

EXPLANATION OF PTA CALCULATION

EXPLANATION OF PTE CALCULATION

To go back, right click here and select Back. To go forward, right click here and select Forward. To refresh, right click here and select Refresh.

Back to OASIS | Home page

UNITED STATES PATENT AND TRADEMARK OFFICE

Commissioner for Patents
United States Patent and Trademark Office
P.O. Box 1450
Alexandria, VA 22313-1450
www.uspto.gov

PHILIP S. JOHNSON
JOHNSON & JOHNSON
ONE JOHNSON & JOHNSON PLAZA
NEW BRUNSWICK NJ 08933-7003

COPY MAILED

DEC 21 2009

OFFICE OF PETITIONS

In re Patent No. 7,560,112 :
Chen et al. :
Issue Date: July 14, 2009 :
Application No. 11/413,561 : DECISION ON REQUEST FOR
Filed: April 28, 2006 : RECONSIDERATION OF
Attorney Dkt. No. Cen5094 USA : PATENT TERM ADJUSTMENT
NP :
Title: ANTI-IL-6 ANTIBODIES, :
COMPOSITIONS, METHODS AND USES :
:

This is in response to the " Request For Reconsideration Of Patent Term Adjustment (37 C.F.R. §1.705(b) and 37 CFR § 1.705(d))" filed September 11, 2009. This petition is properly treated under 37 CFR 1.705(d). Patentees request that the patent term be adjusted from 282 days to 359 days.

The request for reconsideration of patent term adjustment is **DISMISSED**.

On July 14, 2009, the above-identified application matured into US Patent No. 7,560,112 with a patent term adjustment of 282 days. This request for reconsideration of patent term adjustment (including the previously submitted fee) was timely filed within two months of the issue date of the patent. See 37 CFR 1.705(d).

Patentees request recalculation of the patent term adjustment based on the Office's failure to issue the patent within 3 years of the filing date. Thus, patentees request that the determination of patent term adjustment be increased to a total of three hundred fifty-nine (359) days (the sum of the period of three-year delay (77 days) and the period of examination delay (282 days)).

The Office finds that as of the issuance of the patent on July 14, 2009, the application was pending three years and 77 days

after its filing date (April 28, 2009 to July 14, 2009). A period of adjustment of 282 days was entered for Office delay pursuant to 37 CFR 1.702(a)(1) and (a)(2). At issue is whether patentee should accrue an additional 77 days of patent term adjustment for the Office taking in excess of three years to issue the patent as well as 282 days for Office failure to take a certain action within a specified time frame (or examination delay).

Patentees' calculation of the period of overlap is inconsistent with the Office's interpretation of this provision. 35 U.S.C. 154(b)(2)(A) limits the adjustment of patent term, as follows:

> to the extent that the periods of delay attributable to grounds specified in paragraph (1) overlap, the period of any adjustment granted under this subsection shall not exceed the actual number of days the issuance of the patent was delayed.

Likewise, 37 CFR 1.703(f) provides that:

> To the extent that periods of delay attributable to the grounds specified in §1.702 overlap, the period of adjustment granted under this section shall not exceed the actual number of days the issuance of the patent was delayed.

As explained in *Explanation of 37 CFR 1.703(f) and of the United States Patent and Trademark Office Interpretation of 35 U.S.C. 154(b)(2)(A)*, 69 Fed. Reg. 34283 (June 21, 2004), the Office interprets 35 U.S.C. 154(b)(2)(A) as permitting either patent term adjustment under 35 U.S.C. 154(b)(1)(A)(i)-(iv), or patent term adjustment under 35 U.S.C. 154(b)(1)(B), but not as permitting patent term adjustment under both 35 U.S.C. 154(b)(1)(A)(i)-(iv) and 154(b)(1)(B). Accordingly, the Office implements the overlap provision as follows:

> If an application is entitled to an adjustment under 35 U.S.C. 154(b)(1)(B), the entire period during which the application was pending (except for periods excluded under 35 U.S.C. 154(b)(1)(B)(i)-(iii)), and not just the period beginning three years after the actual filing date of the application, is the period of delay under 35 U.S.C. 154(b)(1)(B) in determining whether periods of delay overlap under 35 U.S.C. 154(b)(2)(A). Thus, any days of

> delay for Office issuance of the patent more than 3 years after the filing date of the application, which overlap with the days of patent term adjustment accorded prior to the issuance of the patent will not result in any additional patent term adjustment. See 35 U.S.C. 154(b)(1)(B), 35 U.S.C. 154(b)(2)(A), and 37 CFR § 1.703(f). See *Changes to Implement Patent Term Adjustment Under Twenty Year Term; Final Rule*, 65 Fed. Reg. 56366 (Sept. 18, 2000). See also *Revision of Patent Term Extension and Patent Term Adjustment Provisions; Final Rule*, 69 Fed. Reg. 21704 (April 22, 2004), 1282 Off. Gaz. Pat. Office 100 (May 18, 2004). See also *Explanation of 37 CFR 1.703(f) and of the United States Patent and Trademark Office Interpretation of 35 U.S.C. 154(b)(2)(A)*, 69 Fed. Reg. 34283 (June 21, 2004).

As such, the period for over 3 year pendency does not overlap only to the extent that the actual dates in the period beginning three years after the date on which the application was filed overlap with the actual dates in the periods for failure of the Office to take action within specified time frames.

In this instance, the relevant period under 35 U.S.C. 154(b)(1)(B) in determining whether periods of delay "overlap" under 35 U.S.C. 154(b)(2)(A) is the entire period during which the application was pending before the Office, April 28, 2006 until issuance on July 14, 2009. This 77 days of pendency over three years is the relevant period for considering overlap. 282 days of patent term adjustment were accorded for Office delay pursuant to 37 CFR §1.702(a)(1) and (a)(2). Entry of both 77 days pursuant to 37 CFR §1.702(b) for the Office taking in excess of three years to issue the patent and 282 days pursuant to 37 CFR §1.702(a) for Office examination delay is neither permitted nor warranted. The Office did not delay 282 days and then another 77 days. The greater period, 282 days, is the actual number of days issuance of the patent was delayed by the Office.

In view thereof, the Office affirms that the revised determination of patent term adjustment at the time of the issuance of the patent was 282 days.

The Office acknowledges the previous submission of the $200.00 fee set forth in 37 CFR 1.18(e). No additional fees are required.

Telephone inquiries specific to this matter should be directed to Charlema Grant, Petitions Attorney, at (571) 272-3215.

/Kery A. Fries/

Kery Fries
Senior Legal Advisor Attorney
Office of Patent Legal Administration
Office of Deputy Commissioner
For Patent Examination Policy

UNITED STATES PATENT AND TRADEMARK OFFICE

UNITED STATES DEPARTMENT OF COMMERCE
United States Patent and Trademark Office
Address: COMMISSIONER FOR PATENTS
P.O. Box 1450
Alexandria, Virginia 22313-1450
www.uspto.gov

PHILIP S. JOHNSON
JOHNSON & JOHNSON
ONE JOHNSON & JOHNSON PLAZA
NEW BRUNSWICK, NJ 08933-7003

Mail Date: 04/20/2010

Applicant	: Yan Chen	: DECISION ON REQUEST FOR
Patent Number	: 7560112	: RECALCULATION of PATENT
Issue Date	: 07/14/2009	: TERM ADJUSTMENT IN VIEW
Appliction No	: 11/413,561	: OF WYETH AND NOTICE OF INTENT TO
Filed	: 04/28/2006	: ISSUE CERTIFICATE OF CORRECTION
		:

The Request for Recalculation is **GRANTED** to the extent indicated.

The patent term adjustment has been determined to be **359** days. The USPTO will *sua sponte* issue a certificate of correction reflecting the amount of PTA days determined by the recalculation.

Prior to the issuance of the certificate of correction, the USPTO will afford patentee an opportunity to be heard and request reconsideration. Accordingly, patentee has **one month or thirty (30) days**, whichever is longer, to file a request for reconsideration of this patent term adjustment calculation. See 35 U.S.C. 154(b)(3)(B)(ii) and 37 CFR 1.322(a)(4). No extensions of time will be granted under 37 CFR 1.136.

Patentee should use document code PET.OP if electronically filing a request for reconsideration of this patent term adjustment calculation. The patentee must also include the information required by 37 CFR 1.705(b)(2) and the fee required by 37 CFR 1.18(e). If patentee does not file a timely request for reconsideration of this patent term adjustment calculation including the information required by 37 CFR 1.705(b)(2) and the fee required by 37 CFR 1.18(e), the USPTO will issue a certificate of correction reflecting the PTA determination noted above.

Patentee should be aware that in order to preserve the right to review in the United States District Court for the District of Columbia of the USPTO patent term adjustment determination, patentee must ensure that he or she also take the steps required under 35 U.S.C. 154(b)(4)(A) in a timely manner. Nothing in the request for recalculation should be construed as providing an alternative time frame for commencing a civil action under 35 U.S.C. 154(b)(4)(A).

Any questions concerning this decision should be directed to the Office of Patent Legal Administration at 571-272-7702.

UNITED STATES PATENT AND TRADEMARK OFFICE

UNITED STATES DEPARTMENT OF COMMERCE
United States Patent and Trademark Office
Address: COMMISSIONER FOR PATENTS
P.O. Box 1450
Alexandria, Virginia 22313-1450
www.uspto.gov

MARSHALL, GERSTEIN & BORUN LLP (MICROSOFT)
233 SOUTH WACKER DRIVE
6300 WILLIS TOWER
CHICAGO, IL 60606

Mail Date: 04/21/2010

Applicant	: Ravi T. Rao	: DECISION ON REQUEST FOR
Patent Number	: 7614060	: RECALCULATION of PATENT
Issue Date	: 11/03/2009	: TERM ADJUSTMENT IN VIEW
Appliction No	: 11/413,565	: OF WYETH AND NOTICE OF INTENT TO
Filed	: 04/28/2006	: ISSUE CERTIFICATE OF CORRECTION
		:

The Request for Recalculation is **GRANTED** to the extent indicated.

The patent term adjustment has been determined to be **0** days. The USPTO will *sua sponte* issue a certificate of correction reflecting the amount of PTA days determined by the recalculation.

Prior to the issuance of the certificate of correction, the USPTO will afford patentee an opportunity to be heard and request reconsideration. Accordingly, patentee has **one month or thirty (30) days**, whichever is longer, to file a request for reconsideration of this patent term adjustment calculation. See 35 U.S.C. 154(b)(3)(B)(ii) and 37 CFR 1.322(a)(4). No extensions of time will be granted under 37 CFR 1.136.

Patentee should use document code PET.OP if electronically filing a request for reconsideration of this patent term adjustment calculation. The patentee must also include the information required by 37 CFR 1.705(b)(2) and the fee required by 37 CFR 1.18(e). If patentee does not file a timely request for reconsideration of this patent term adjustment calculation including the information required by 37 CFR 1.705(b)(2) and the fee required by 37 CFR 1.18(e), the USPTO will issue a certificate of correction reflecting the PTA determination noted above.

Patentee should be aware that in order to preserve the right to review in the United States District Court for the District of Columbia of the USPTO patent term adjustment determination, patentee must ensure that he or she also take the steps required under 35 U.S.C. 154(b)(4)(A) in a timely manner. Nothing in the request for recalculation should be construed as providing an alternative time frame for commencing a civil action under 35 U.S.C. 154(b)(4)(A).

Any questions concerning this decision should be directed to the Office of Patent Legal Administration at 571-272-7702.

UNITED STATES PATENT AND TRADEMARK OFFICE

Commissioner for Patents
United States Patent and Trademark Office
P.O. Box 1450
Alexandria, VA 22313-1450
www.uspto.gov

BOZICEVIC, FIELD & FRANCIS LLP
1900 UNIVERSITY AVENUE
SUITE 200
EAST PALO ALTO, CA 94303

COPY MAILED

JAN 0 8 2007

OFFICE OF PETITIONS

In re Application of :
Nagavarapu, Shivak, Chin, Foehr, and Gonzalez-Zulueta :
Application No. 11/413,566 : DECISION REFUSING STATUS
Filed: April 27, 2006 : UNDER 37 CFR 1.47(a)
Attorney Docket No. AGYX-014CIP :
For: USE OF BIOMOLECULAR TARGETS IN THE TREATMENT AND VISUALIZATION OF BARIN TUMORS

This is a decision on the petition under 37 CFR 1.47(a) filed October 2, 2006.

The petition under 37 CFR 1.47(a) is **dismissed.**

Any request for reconsideration under this decision must be submitted within TWO (2) MONTHS from the mail date of this decision. Extensions of time under 37 CFR 1.136(a) are permitted. Failure to respond will result in the abandonment of this application. Any response should be titled "Request for Reconsideration of Petition Under 37 CFR 1.47(a).

The above-identified application was filed on April 27, 2006, without a proper oath or declaration. Accordingly, a "Notice to File Missing Parts of Nonprovisional Application" was mailed on June 1, 2006, requiring an executed oath or declaration, and a surcharge for the late filing of the oath or declaration, replacement drawings, a sequence listing.

A grantable petition under 37 CFR 1.47(a) requires:

(1) proof that the non-signing inventor(s) cannot be reached or refuses to sign the oath or declaration after having been presented with the application papers (specification, claims, and drawings);

(2) an acceptable oath or declaration in compliance with 35 U.S.C. §§ 115 and 116;

(3) the petition fee,

(4) a statement of the last known address of the non-signing inventor,

The instant petition lacks item (1) as set forth above.

As to item (1), petitioner has not established that the non-signing inventor cannot be reached or has constructively refused to sign the oath or declaration. Petitioner has only indicated that a copy of the

declaration was sent to the last known address of the non-signing inventor. There is no indication that the papers were received. If petitioner is arguing that the non-signing inventor is unavailable to join the prosecution of the application, section 409.03(d) of the *Manual of Patent Examining Procedure* (MPEP) explains that:

> [w]here inability to find or reach a non-signing inventor "after diligent effort" is the reason for filing under 37 CFR 1.47, a statement of facts should be submitted that fully describes the exact facts, which are relied on to establish that a diligent effort was made.

It cannot be concluded that petitioner made a 'diligent' effort to locate the non-signing inventor given the evidence presented. It is only clear that the declaration was sent to the last known address of the non-signing inventor. This, without more, does not amount to diligence in locating the non-signing inventor. Section 409.03(d) further explains that the aforementioned statement " . . . must be signed, where at all possible, by a person having firsthand knowledge of the facts recited therein. Statements based on hearsay will not normally be accepted. Copies of documentary evidence, such as internet searches, certified mail return receipts, cover letters of instructions, telegrams, that support a finding that the non-signing inventor could not be found or reached should be made part of the statement." In this case, petitioner should, at least, provide some evidence that the non-signing inventor has received the application papers, i.e., a certified mail return receipt, or that other efforts were made to locate the non-signing inventor to no avail.

If petitioner is maintaining that the non-signing inventor has constructively refused to the join the application, petitioner must provide some evidence that the non-signing inventor has received the application papers, but is unwilling to comply as demonstrated by inventor's behavior either expressly or constructively. Petitioner must also demonstrate that a complete copy of the application papers, including specification, claims, drawings, and abstract, were mailed to last known address for the non-signing inventor.

The joinder of inventor Nagavarau is noted.

Further correspondence with respect to this matter should be addressed as follows:

By mail: Mail Stop Petitions
Commissioner for Patents,
PO Box 1450
Alexandria, VA 22313-1450

By FAX: (571) 273-8300
Attn: Office of Petitions

Telephone inquiries should be directed to the undersigned (571) 272-3222.

Kenya A. McLaughlin
Petitions Attorney
Office of Petitions

UNITED STATES PATENT AND TRADEMARK OFFICE

Commissioner for Patents
United States Patent and Trademark Office
P.O. Box 1450
Alexandria, VA 22313-1450
www.uspto.gov

BOZICEVIC, FIELD & FRANCIS LLP
1900 UNIVERSITY AVENUE
SUITE 200
EAST PALO ALTO, CA 94303

COPY MAILED

JUL 06 2007

OFFICE OF PETITIONS

In re Application of :
Nagavarapu, Shivak, Chin, Foehr, and Gonzalez-Zulueta :
Application No. 11/413,566 : DECISION REFUSING STATUS
Filed: April 27, 2006 : UNDER 37 CFR 1.47(a)
Attorney Docket No. AGYX-014CIP :
For: USE OF BIOMOLECULAR TARGETS IN THE TREATMENT AND VISUALIZATION OF BARIN TUMORS

This is in response to the petition under 37 CFR 1.47(a), filed June 5, 2007.

The petition is **GRANTED**.

The above-identified application and papers have been reviewed and found in compliance with 37 CFR 1.47(a). This application is hereby accorded Rule 1.47(a) status.

The above-identified application was filed on April 27, 2006, without a proper oath or declaration. Accordingly, a "Notice to File Missing Parts of Nonprovisional Application" was mailed on June 1, 2006, requiring an executed oath or declaration, and a surcharge for the late filing of the oath or declaration, replacement drawings, a sequence listing. A petition under 37 CFR 1.47(a) was first filed on October 2, 2006, and dismissed by a decision mailed January 8, 2007.

Petitioner has shown that inventor Gonzalez-Zulueta cannot be located to join the prosecution of the application. The above-identified application and papers have been reviewed and found in compliance with 37 CFR 1.47(a). This application is hereby accorded Rule 1.47(a) status.

As provided in Rule 1.47(c), this Office will forward notice of this application's filing to the non-signing inventor at the address given in the petition. Notice of the filing of this application will also be published in the Official Gazette.

This application will be forwarded to the Office of Initial Patent Examination for further processing.

Telephone inquiries concerning this decision should be directed to the undersigned at (571) 272-3222.

Kenya A. McLaughlin
Petitions Attorney
Office of Petitions

UNITED STATES PATENT AND TRADEMARK OFFICE

UNITED STATES DEPARTMENT OF COMMERCE
United States Patent and Trademark Office
Address: COMMISSIONER FOR PATENTS
P.O. Box 1450
Alexandria, Virginia 22313-1450
www.uspto.gov

ALBERT B. KIMBALL, JR.
BRACEWELL & PATTERSON L L P
711 LOUISANA SUITE 2300
HOUSTON, TX 77002

Mail Date: 05/25/2010

Applicant	: Jorge A. Pita	: DECISION ON REQUEST FOR
Patent Number	: 7660711	: RECALCULATION of PATENT
Issue Date	: 02/09/2010	: TERM ADJUSTMENT IN VIEW
Application No	: 11/413,567	: OF WYETH AND NOTICE OF INTENT TO
Filed	: 04/28/2006	: ISSUE CERTIFICATE OF CORRECTION
		:

The Request for Recalculation is **GRANTED** to the extent indicated.

The patent term adjustment has been determined to be **887** days. The USPTO will *sua sponte* issue a certificate of correction reflecting the amount of PTA days determined by the recalculation.

Prior to the issuance of the certificate of correction, the USPTO will afford patentee an opportunity to be heard and request reconsideration. Accordingly, patentee has **one month or thirty (30) days**, whichever is longer, to file a request for reconsideration of this patent term adjustment calculation. See 35 U.S.C. 154(b)(3)(B)(ii) and 37 CFR 1.322(a)(4). No extensions of time will be granted under 37 CFR 1.136.

Patentee should use document code PET.OP if electronically filing a request for reconsideration of this patent term adjustment calculation. The patentee must also include the information required by 37 CFR 1.705(b)(2) and the fee required by 37 CFR 1.18(e). If patentee does not file a timely request for reconsideration of this patent term adjustment calculation including the information required by 37 CFR 1.705(b)(2) and the fee required by 37 CFR 1.18(e), the USPTO will issue a certificate of correction reflecting the PTA determination noted above.

Patentee should be aware that in order to preserve the right to review in the United States District Court for the District of Columbia of the USPTO patent term adjustment determination, patentee must ensure that he or she also take the steps required under 35 U.S.C. 154(b)(4)(A) in a timely manner. Nothing in the request for recalculation should be construed as providing an alternative time frame for commencing a civil action under 35 U.S.C. 154(b)(4)(A).

Any questions concerning this decision should be directed to the Office of Patent Legal Administration at 571-272-7702.

UNITED STATES PATENT AND TRADEMARK OFFICE

UNITED STATES DEPARTMENT OF COMMERCE
United States Patent and Trademark Office
Address: COMMISSIONER FOR PATENTS
P.O. Box 1450
Alexandria, Virginia 22313-1450
www.uspto.gov

KIMBERLY-CLARK WORLDWIDE, INC.
Tara Pohlkotte
2300 Winchester Rd.
NEENAH, WI 54956

Mail Date: 04/21/2010

Applicant	: Debra N. Welchel	: DECISION ON REQUEST FOR
Patent Number	: 7648234	: RECALCULATION of PATENT
Issue Date	: 01/19/2010	: TERM ADJUSTMENT IN VIEW
Appliction No	: 11/413,575	: OF WYETH AND NOTICE OF INTENT TO
Filed	: 04/28/2006	: ISSUE CERTIFICATE OF CORRECTION
		:

The Request for Recalculation is **GRANTED** to the extent indicated.

The patent term adjustment has been determined to be **612** days. The USPTO will *sua sponte* issue a certificate of correction reflecting the amount of PTA days determined by the recalculation.

Prior to the issuance of the certificate of correction, the USPTO will afford patentee an opportunity to be heard and request reconsideration. Accordingly, patentee has **one month or thirty (30) days**, whichever is longer, to file a request for reconsideration of this patent term adjustment calculation. See 35 U.S.C. 154(b)(3)(B)(ii) and 37 CFR 1.322(a)(4). No extensions of time will be granted under 37 CFR 1.136.

Patentee should use document code PET.OP if electronically filing a request for reconsideration of this patent term adjustment calculation. The patentee must also include the information required by 37 CFR 1.705(b)(2) and the fee required by 37 CFR 1.18(e). If patentee does not file a timely request for reconsideration of this patent term adjustment calculation including the information required by 37 CFR 1.705(b)(2) and the fee required by 37 CFR 1.18(e), the USPTO will issue a certificate of correction reflecting the PTA determination noted above.

Patentee should be aware that in order to preserve the right to review in the United States District Court for the District of Columbia of the USPTO patent term adjustment determination, patentee must ensure that he or she also take the steps required under 35 U.S.C. 154(b)(4)(A) in a timely manner. Nothing in the request for recalculation should be construed as providing an alternative time frame for commencing a civil action under 35 U.S.C. 154(b)(4)(A).

Any questions concerning this decision should be directed to the Office of Patent Legal Administration at 571-272-7702.

UNITED STATES PATENT AND TRADEMARK OFFICE

Commissioner for Patents
United States Patent and Trademark Office
P.O. Box 1450
Alexandria, VA 22313-1450
www.uspto.gov

MOTOROLA, INC.
1303 EAST ALGONQUIN ROAD
IL01/3RD
SCHAUMBURG IL 60196

MAILED
MAR 0 3 2010

OFFICE OF PETITIONS

In re Application of
Michael F. Kros
Application No. 11/413,585
Filed: April 28, 2006
Attorney Docket No. CM08539BBH

: DECISION ON PETITIONS

This is a decision on the petition filed November 6, 2009, under 37 CFR 1.137(a), or, in the alternative, under 37 CFR 1.137(b) to revive the above-identified application.

The petition under 37 CFR 1.137(a) is **DISMISSED.**

The petition under 37 CFR 1.137(b) is **GRANTED.**

Any further petition to revive must be submitted within TWO (2) MONTHS from the mail date of this decision. Extensions of time under 37 CFR 1.136(a) are permitted. The reconsideration request should include a cover letter entitled "Renewed Petition under 37 CFR 1.137(a)." This is **not** a final agency action within the meaning of 5 U.S.C.§ 704.

The application became abandoned for failure to timely pay the issue and publication fees on or before October 6, 2009, as required by the Notice of Allowance and Fee(s) Due mailed July 6, 2009.

A grantable petition under 37 CFR 1.137(a) must be accompanied by: (1) the required reply, unless previously filed; (2) the petition fee as set forth in 37 CFR 1.17(l); (3) a showing to the satisfaction of the Director that the entire delay in filing the required reply from the due date for the reply until the filing of a grantable petition pursuant to 37 CFR 1.137(a) was unavoidable; and (4) any terminal disclaimer (and fee as set forth in 37 CFR 1.20(d)) required pursuant to 37 CFR 1.137(d). The instant petition lacks item (3).

Petitioner asserts that docketing error was the cause of delay in acting to prevent the application from becoming abandoned. A delay resulting from an error (e.g., a docketing error) on the part of an employee in the performance of a clerical function may provide the basis for a showing of "unavoidable" delay, provided it is shown that: (1) the error was the cause of the delay at issue; (2) there was in place a business routine for performing the clerical function that could reasonably be relied upon to avoid errors in its performance; (3) and the employee was sufficiently trained and experienced with regard to the function and routine for its performance that reliance upon such employee represented the exercise of due care. *See* MPEP 711.03(c)(III)(C)(2).

An adequate showing requires statements by all persons with direct knowledge of the circumstances surrounding the delay, setting forth the facts, as they know them. Petitioner must supply a thorough explanation of the docketing and call-up system in use and must identify the type of records kept and the person responsible for the maintenance of the system. This showing must include copies of mail ledger, docket sheets, filewrappers and such other records as may exist which would substantiate an error in docketing, and include an indication as to why the system failed in this instance to provide adequate notice that a reply was due. Petitioner must also supply information regarding the training provided to the personnel responsible for the docketing error, degree of supervision of their work, examples of other work functions carried out, and checks on the described work which were used to assure proper execution of assigned tasks.

In view of the above, the showing of record is not sufficient to establish to the satisfaction of the Director that the delay was unavoidable within the meaning of 37 CFR 1.137(a).

However, the petition under 37 CFR 1.137(b) to revive the above-identified application, is **GRANTED**.

The petition satisfies the conditions for revival pursuant to the provisions of 37 CFR 1.137(b) in that (1) the reply in the form of the issue and publication fees; (2) the petition fee; and (3) the required statement of unintentional delay have been received. Accordingly, the reply to the Notice of Allowance and Fee(s) Due mailed July 6, 2009, is accepted as having been unintentionally delayed.

Any questions concerning this matter may be directed to the undersigned at (571) 272-3208.

This application is being referred to the Office of Data Management to be processed into a patent.

/KOC/
Karen Creasy
Petitions Examiner
Office of Petitions

UNITED STATES PATENT AND TRADEMARK OFFICE

COMMISSIONER FOR PATENTS
UNITED STATES PATENT AND TRADEMARK OFFICE
P.O. BOX 1450
ALEXANDRIA, VA 22313-1450
www.uspto.gov

TECHNOLOGY & INTELLECTUAL PROPERTY STRATEGIES GROUP PC, DBA TIPS GROUP
P. O. BOX 1639
LOS ALTOS, CA 94023-1639

COPY MAILED

JUL 11 2007

OFFICE OF PETITIONS

In re Application of	:	
Mark Poidomani et al	:	
Application No. 11/413,595	:	DECISION ON PETITION
Filed: April 27, 2006	:	
Attorney Docket No. PRIVP004.US01	:	

This is in response to the petition under 37 CFR 1.47(a), filed October 23, 2006.

The petition is dismissed.

Rule 47 applicant is given TWO MONTHS from the mailing date of this decision to reply, correcting the below-noted deficiencies. Any reply should be entitled "Request for Reconsideration of Petition Under 37 CFR 1.47(a)," and should only address the deficiencies noted below, except that the reply may include an oath or declaration executed by the non-signing inventor. **FAILURE TO RESPOND WILL RESULT IN ABANDONMENT OF THE APPLICATION.** Any extensions of time will be governed by 37 CFR 1.136(a).

A grantable petition under 37 CFR 1.47(a) requires: (1) proof that the non-signing inventor cannot be reached or refuses to sign the oath or declaration after having been presented with the application papers (specification, claims and drawings); (2) an acceptable oath or declaration in compliance with 35 U.S.C. §§ 115 and 116; (3) the petition fee; and (4) a statement of the last known address of the non-signing inventor. Applicant lacks item (2) set forth above.

As to item (2), the declaration submitted with the petition does not set forth the residence, citizenship and post office address of non-signing co-inventor Chuck McGuire. An oath or declaration in compliance with 37 CFR 1.63 and 1.64 signed by the inventors on behalf of themselves and non-signing, co-inventor Chuck McGuire is REQUIRED. *See* 37 CFR 1.76 and MPEP 409.03(a).

Additionally, it is noted that co-inventor McGuire's name appears on the declaration as "Chuck McGuire," whereas, the petition papers refer to him as "Charles McGuire." If appropriate, the inventor's correct name should appear on the oath or declaration and be accompanied by a petition under 37 CFR 1.182 to correct the inventor's name.

Further correspondence with respect to this matter should be addressed as follows:

By mail: Mail Stop PETITION
Commissioner for Patents
Post Office Box 1450
Alexandria, VA 22313-1450

By hand: Customer Service Window
Mail Stop Petitions
Randolph Building
401 Dulany Street
Alexandria, VA 22314

By fax: (571) 273-8300
ATTN: Office of Petitions

Correspondence concerning this matter may also be filed through the USPTO Electronic Filing System.

Petitioner may wish to contact the undersigned after the filing of the renewed petition under 37 CFR 1.47(a) to expedite consideration thereof.

Telephone inquiries should be directed to the undersigned at (571) 272-3218.

Frances Hicks
Petitions Examiner
Office of Petitions

UNITED STATES PATENT AND TRADEMARK OFFICE

Commissioner for Patents
United States Patent and Trademark Office
P.O. Box 1450
Alexandria, VA 22313-1450
www.uspto.gov

TECHNOLOGY & INTELLECTUAL PROPERTY
STRATEGIES GROUP PC (dba TIPS GROUP)
P. O. BOX 1639
LOS ALTOS CA 94023-1639

COPY MAILED

MAR 13 2008

OFFICE OF PETITIONS

In re Application of
POIDOMANI et al.
Application No. 11/413,595
Filed: 04/27/2006
Attorney Docket No. PRIVP004.US01
Title: ELECTRONIC CARDS AND METHODS FOR MAKING SAME

: DECISION ACCORDING STATUS UNDER 37 CFR 1.47(a)

This is in response to the renewed petition under 37 CFR 1.47(a), filed December 17, 2007 (certificate of mailing dated December 11, 2007).[1] This is also a petition under 37 CFR 1.182 to correct the non-signing inventor's name.

The petition under 37 CFR 1.47(a) is **granted**.

The petition under 37 CFR 1.182 is **granted**.

Petition under 37 CFR 1.47(a)

Petitioners showed that the non-signing inventor refused to join in the filing of the above-identified application after having been mailed the application papers.

The above-identified application and papers have been reviewed and found in compliance with 37 CFR 1.47(a). This application is hereby accorded Rule 1.47(a) status. As provided in Rule 1.47(c), this Office will forward notice of this application's filing to the non-signing inventor at the address given in the present petition. Notice of the filing of this application will also be published in the Official Gazette.

[1] Petitioners obtained an extension of time for response within the second month. Accordingly, the petition is filed timely.

Petition under 37 CFR 1.182

Petitioners request that the Office correct the name of the non-signing inventor from "Chuck McGuire" to - - Charles McGuire- -. Petitioners assert that this request may also fall under 37 CFR 1.48(f) for automatic correction of inventorship because no declaration was previously accepted in the application.

37 CFR 1.48(f)(1) provides: "If the correct inventor or inventors are not named on filing a nonprovisional application under § 1.53(b) without an executed oath or declaration under § 1.63 by any of the inventors, the first submission of an executed oath or declaration under § 1.63 by any of the inventors during the pendency of the application will act to correct the earlier identification of inventorship. See § 1.41(a)(4)[.]"

The Office notes that the provisions of 37 CFR 1.48(f) are inapplicable in this instance because petitioners previously submitted a declaration executed under § 1.63 by five of the six inventors. Therefore, the executed declaration submitted on renewed petition, identifying the non-signing inventor as Charles McGuire, will not act to correct the earlier identification of the inventor. A petition under 37 CFR 1.182 (and fee) is necessary for the requested relief.

The Office records have been corrected to reflect the correction of the non-signing inventor's name as noted above. A corrected filing receipt indicating this change accompanies this decision.

Petitioners previously paid a $200.00 fee for filing a petition under 37 CFR 1.47(a) on October 23, 2006. Thus, the $200.00 petition fee paid on December 17, 2007, is unnecessary and will be refunded to the Deposit Account.

The matter is being referred to the Technology Center AU 2887.

Inquiries regarding this decision should be directed to the undersigned at (571) 272-3211.

Christina Tartera Donnell

Christina Tartera Donnell
Senior Petitions Attorney
Office of Petitions

UNITED STATES PATENT AND TRADEMARK OFFICE

Commissioner for Patents
United States Patent and Trademark Office
P.O. Box 1450
Alexandria, VA 22313-1450
www.uspto.gov

COPY MAILED

MAR 13 2008

OFFICE OF PETITIONS

Mr. Charles McGuire
479 Jenny Drive
Newbury Park, CA 94301

In re Application of :
POIDOMANI et al. :
Application No. 11/413,595 : LETTER
Filed: 04/27/2006 :
Attorney Docket No. PRIVP004.US01 :
Title: ELECTRONIC CARDS AND METHODS :
FOR MAKING SAME :

Dear Mr. McGuire:

You are named as a joint inventor in the above-identified United States patent application, filed under the provisions of 35 U.S.C. 116 (United States Code), and 37 CFR 1.47(a), Rules of Practice in Patent Cases. Should a patent be granted on the application you will be designated therein as a joint inventor.

As a named inventor you are entitled to inspect any paper in the file wrapper of the application, order copies of all or any part thereof (at a prepaid cost per 37 CFR 1.19) or make your position of record in the application. Alternatively, you may arrange to do any of the preceding through a registered patent attorney or agent presenting written authorization from you. If you care to join the application, counsel of record (see below) would presumably assist you. Joining the application would entail the filing of an appropriate oath or declaration by you pursuant to 37 CFR 1.63.

Requests for information regarding your application should be directed to the File Information Unit at (703) 308-2733. Information regarding how to pay for and order a copy of the application, or a specific paper in the application, should be directed to the Certification Division at (571) 272-3150 or 1 (800) 972-6382 (outside the Washington, DC area).

C. T. Donnell

Christina Tartera Donnell
Senior Petitions Attorney
Office of Petitions

TECHNOLOGY & INTELLECTUAL PROPERTY
STRATEGIES GROUP PC (dba TIPS GROUP)
P. O. BOX 1639
LOS ALTOS CA 94023-1639

UNITED STATES PATENT AND TRADEMARK OFFICE

UNITED STATES DEPARTMENT OF COMMERCE
United States Patent and Trademark Office
Address: COMMISSIONER FOR PATENTS
P.O. Box 1450
Alexandria, Virginia 22313-1450
www.uspto.gov

APPLICATION NUMBER	FILING or 371(c) DATE	GRP ART UNIT	FIL FEE REC'D	ATTY.DOCKET.NO	TOT CLAIMS	IND CLAIMS
11/413,595	04/27/2006	2887	2480	PRIVP004.US01	35	6

CONFIRMATION NO. 8718

CORRECTED FILING RECEIPT

45965
TECHNOLOGY & INTELLECTUAL PROPERTY
STRATEGIES GROUP PC (dba TIPS GROUP)
P. O. BOX 1639
LOS ALTOS, CA 94023-1639

OC000000028796487

Date Mailed: 03/12/2008

Receipt is acknowledged of this non-provisional patent application. The application will be taken up for examination in due course. Applicant will be notified as to the results of the examination. Any correspondence concerning the application must include the following identification information: the U.S. APPLICATION NUMBER, FILING DATE, NAME OF APPLICANT, and TITLE OF INVENTION. Fees transmitted by check or draft are subject to collection. Please verify the accuracy of the data presented on this receipt. **If an error is noted on this Filing Receipt, please write to the Office of Initial Patent Examination's Filing Receipt Corrections. Please provide a copy of this Filing Receipt with the changes noted thereon. If you received a "Notice to File Missing Parts" for this application, please submit any corrections to this Filing Receipt with your reply to the Notice. When the USPTO processes the reply to the Notice, the USPTO will generate another Filing Receipt incorporating the requested corrections**

Applicant(s)

Mark Poidomani, Windernere, FL;
Joan Ziegler, Newbury Park, CA;
Eric Foo, Thousand Oaks, CA;
Ziv Alon, Newbury Park, CA;
Charles McGuire, Newbury Park, CA;
Lawrence Routhenstein, Ocoee, FL;

Power of Attorney: The patent practitioners associated with Customer Number 45965

Domestic Priority data as claimed by applicant

This appln claims benefit of 60/675,388 04/27/2005
and is a CIP of 11/391,719 03/27/2006

Foreign Applications

If Required, Foreign Filing License Granted: 05/18/2006

The country code and number of your priority application, to be used for filing abroad under the Paris Convention, is **US 11/413,595**

Projected Publication Date: Not Applicable

Non-Publication Request: No

Early Publication Request: No

Title

Electronic cards and methods for making same

Preliminary Class

235

PROTECTING YOUR INVENTION OUTSIDE THE UNITED STATES

Since the rights granted by a U.S. patent extend only throughout the territory of the United States and have no effect in a foreign country, an inventor who wishes patent protection in another country must apply for a patent in a specific country or in regional patent offices. Applicants may wish to consider the filing of an international application under the Patent Cooperation Treaty (PCT). An international (PCT) application generally has the same effect as a regular national patent application in each PCT-member country. The PCT process **simplifies** the filing of patent applications on the same invention in member countries, but **does not result** in a grant of "an international patent" and does not eliminate the need of applicants to file additional documents and fees in countries where patent protection is desired.

Almost every country has its own patent law, and a person desiring a patent in a particular country must make an application for patent in that country in accordance with its particular laws. Since the laws of many countries differ in various respects from the patent law of the United States, applicants are advised to seek guidance from specific foreign countries to ensure that patent rights are not lost prematurely.

Applicants also are advised that in the case of inventions made in the United States, the Director of the USPTO must issue a license before applicants can apply for a patent in a foreign country. The filing of a U.S. patent application serves as a request for a foreign filing license. The application's filing receipt contains further information and guidance as to the status of applicant's license for foreign filing.

Applicants may wish to consult the USPTO booklet, "General Information Concerning Patents" (specifically, the section entitled "Treaties and Foreign Patents") for more information on timeframes and deadlines for filing foreign patent applications. The guide is available either by contacting the USPTO Contact Center at 800-786-9199, or it can be viewed on the USPTO website at http://www.uspto.gov/web/offices/pac/doc/general/index.html.

For information on preventing theft of your intellectual property (patents, trademarks and copyrights), you may wish to consult the U.S. Government website, http://www.stopfakes.gov. Part of a Department of Commerce initiative, this website includes self-help "toolkits" giving innovators guidance on how to protect intellectual property in specific countries such as China, Korea and Mexico. For questions regarding patent enforcement issues, applicants may call the U.S. Government hotline at 1-866-999-HALT (1-866-999-4158).

LICENSE FOR FOREIGN FILING UNDER

Title 35, United States Code, Section 184

Title 37, Code of Federal Regulations, 5.11 & 5.15

GRANTED

The applicant has been granted a license under 35 U.S.C. 184, if the phrase "IF REQUIRED, FOREIGN FILING LICENSE GRANTED" followed by a date appears on this form. Such licenses are issued in all applications where the conditions for issuance of a license have been met, regardless of whether or not a license may be required as

set forth in 37 CFR 5.15. The scope and limitations of this license are set forth in 37 CFR 5.15(a) unless an earlier license has been issued under 37 CFR 5.15(b). The license is subject to revocation upon written notification. The date indicated is the effective date of the license, unless an earlier license of similar scope has been granted under 37 CFR 5.13 or 5.14.

This license is to be retained by the licensee and may be used at any time on or after the effective date thereof unless it is revoked. This license is automatically transferred to any related applications(s) filed under 37 CFR 1.53(d). This license is not retroactive.

The grant of a license does not in any way lessen the responsibility of a licensee for the security of the subject matter as imposed by any Government contract or the provisions of existing laws relating to espionage and the national security or the export of technical data. Licensees should apprise themselves of current regulations especially with respect to certain countries, of other agencies, particularly the Office of Defense Trade Controls, Department of State (with respect to Arms, Munitions and Implements of War (22 CFR 121-128)); the Bureau of Industry and Security, Department of Commerce (15 CFR parts 730-774); the Office of Foreign AssetsControl, Department of Treasury (31 CFR Parts 500+) and the Department of Energy.

NOT GRANTED

No license under 35 U.S.C. 184 has been granted at this time, if the phrase "IF REQUIRED, FOREIGN FILING LICENSE GRANTED" DOES NOT appear on this form. Applicant may still petition for a license under 37 CFR 5.12, if a license is desired before the expiration of 6 months from the filing date of the application. If 6 months has lapsed from the filing date of this application and the licensee has not received any indication of a secrecy order under 35 U.S.C. 181, the licensee may foreign file the application pursuant to 37 CFR 5.15(b).

UNITED STATES PATENT AND TRADEMARK OFFICE

Commissioner for Patents
United States Patent and Trademark Office
P.O. Box 1450
Alexandria, VA 22313-1450
www.uspto.gov

TIPS GROUP
c/o Intellevate LLC
P. O. BOX 52050
Minneapolis MN 55402

COPY MAILED

FEB 01 2010

In re Application of	:	
Mark Poidomani et al.	:	
Application No. 11/413,595	:	DECISION ON PETITION
Filed: April 27, 2006	:	TO WITHDRAW
Attorney Docket No. PRIVP004.US01	:	FROM RECORD
	:	

This is a decision on the Request to Withdraw as attorney or agent of record under 37 C.F.R. § 1.36(b), filed December 10, 2009.

The request is **NOT APPROVED.**

The Office will no longer accept address changes to a new practitioner or law firm filed with a Request, absent the filing of a power of attorney to the new representative. The Office will either change the correspondence address of record to the most current address information provided for the assignee of the entire interest who properly became of record under 37 CFR 3.71 or, if no assignee of the entire interest has properly been made of record under 37 CFR 3.71, the most current address information provided for the first named inventor. This change has been made in order to avoid subsequent correspondence being directed to an incorrect address or to a practitioner who has not been appointed as practitioner of record by the applicant.

Accordingly, the request to withdraw from record cannot be approved because the request to change the correspondence is not that of: (1) the first named inventor; or (2) an assignee of the entire interest under 37 C.F.R 3.71, who has properly intervened. We can only accept an address change to customer number if a power of attorney has been filed.

All future communications from the Office will continue to be directed to the above-identified address until otherwise properly notified.

Telephone inquiries concerning this decision should be directed to the undersigned at 571-272-4618.

/Kimberly Inabinet/

Kimberly Inabinet
Petitions Examiner
Office of Petitions

cc: Wagner, Anderson & Bright, LLP
3541 Ocean View Blvd.
Glendale, CA 91208

UNITED STATES PATENT AND TRADEMARK OFFICE

Commissioner for Patents
United States Patent and Trademark Office
P.O. Box 1450
Alexandria, VA 22313-1450
www.uspto.gov

INNOVAR, LLC
P O BOX 250647
PLANO TX 75025

COPY MAILED

AUG 07 2006

OFFICE OF PETITIONS

In re Application of
Stella, et al.
Application No. 11/413,597
Filed: April 29, 2006
Attorney Docket No. KU-15
For: SULFOALKYL ETHER-ALKYL ETHER CYCLODEXTRIN DERIVATIVES

: DECISION GRANTING
: PETITION

This is a decision on the petition, filed May 31, 2006 (certificate of mailing date May 29, 2006), requesting that the above-identified application be accorded a filing date of April 28, 2006 rather than the presently accorded filing date of April 29, 2006. The petition will be treated under 37 CFR 1.10(c).

Petitioners contend that the above-identified application was deposited in the United States Postal Service (USPS) Express Mail service on April 28, 2006. In support of this contention, petitioners have supplied with the present petition a copy of a USPS Track and Confirm printout that shows a package associated with Express Mail label no. EO920238006US was accepted by the USPS on April 28, 2006. A review of the application file reveals that the Utility Patent Application Transmittal references Express Mail Receipt Number: EO920238006US.

The evidence presented establishes that the Express Mail package associated with Express Mail label no. EO920238006US was deposited with the USPS on April 28, 2006.

Accordingly, the petition is granted.

No fee has been or will be charged in connection with this petition.

The application is being returned to the Office of Initial Patent Examination for correction of the filing date to **April 28, 2006**.

Any inquiries related to this decision should be directed to the undersigned at (571) 272-3230.

Shirene Willis Brantley
Petitions Attorney
Office of Petitions

SPE RESPONSE FOR CERTIFICATE OF CORRECTION

DATE : January 30, 2009

TO SPE OF : ART UNIT 3672
SUBJECT : Request for Certificate of Correction for Appl. No.: 11/413615 Patent no.7308937

Please respond to this request for a certificate of correction w
ithin 7 days.

FOR IFW FILES:

Please review the requested changes/corrections as shown in the **COCIN** document(s) in the IFW application image. No new matter should be introduced, nor should the scope or meaning of the claims be changed.

Please complete the response (see below) and forward the completed response to scanning using document code **COCX**.

FOR PAPER FILES:

Please review the requested changes/corrections as shown in the attached certificate of correction. Please complete this form (see below) and forward it with the file to:

Certificates of Correction Branch (CofC)
Randolph Square – 9D10-A
Palm Location 7580

Magdalene Talley

Certificates of Correction Branch
571-272-0423

Thank You For Your Assistance

The request for issuing the above-identified correction(s) is hereby:
Note your decision on the appropriate box.

- [X] **Approved** — **All** changes apply.
- [ ] **Approved in Part** — Specify below which changes **do not** apply.
- [ ] **Denied** — State the reasons for denial below.

Comments: _____

DAVID BAGNELL
SUPERVISORY PATENT EXAMINER
TECHNOLOGY CENTER 3600 3672

UNITED STATES PATENT AND TRADEMARK OFFICE

UNITED STATES DEPARTMENT OF COMMERCE
United States Patent and Trademark Office
Address: COMMISSIONER FOR PATENTS
P.O. Box 1450
Alexandria, Virginia 22313-1450
www.uspto.gov

SHUMAKER & SIEFFERT, P. A.
1625 RADIO DRIVE
SUITE 300
WOODBURY, MN 55125

Mail Date: 04/20/2010

Applicant	: Jeffrey M. Sieracki	: DECISION ON REQUEST FOR
Patent Number	: 7603177	: RECALCULATION of PATENT
Issue Date	: 10/13/2009	: TERM ADJUSTMENT IN VIEW
Appliction No	: 11/413,626	: OF WYETH AND NOTICE OF INTENT TO
Filed	: 04/28/2006	: ISSUE CERTIFICATE OF CORRECTION
		:

The Request for Recalculation is **GRANTED** to the extent indicated.

The patent term adjustment has been determined to be **693** days. The USPTO will *sua sponte* issue a certificate of correction reflecting the amount of PTA days determined by the recalculation.

Prior to the issuance of the certificate of correction, the USPTO will afford patentee an opportunity to be heard and request reconsideration. Accordingly, patentee has **one month or thirty (30) days,** whichever is longer, to file a request for reconsideration of this patent term adjustment calculation. See 35 U.S.C. 154(b)(3)(B)(ii) and 37 CFR 1.322(a)(4). No extensions of time will be granted under 37 CFR 1.136.

Patentee should use document code PET.OP if electronically filing a request for reconsideration of this patent term adjustment calculation. The patentee must also include the information required by 37 CFR 1.705(b)(2) and the fee required by 37 CFR 1.18(e). If patentee does not file a timely request for reconsideration of this patent term adjustment calculation including the information required by 37 CFR 1.705(b)(2) and the fee required by 37 CFR 1.18(e), the USPTO will issue a certificate of correction reflecting the PTA determination noted above.

Patentee should be aware that in order to preserve the right to review in the United States District Court for the District of Columbia of the USPTO patent term adjustment determination, patentee must ensure that he or she also take the steps required under 35 U.S.C. 154(b)(4)(A) in a timely manner. Nothing in the request for recalculation should be construed as providing an alternative time frame for commencing a civil action under 35 U.S.C. 154(b)(4)(A).

Any questions concerning this decision should be directed to the Office of Patent Legal Administration at 571-272-7702.

UNITED STATES PATENT AND TRADEMARK OFFICE

COMMISSIONER FOR PATENTS
UNITED STATES PATENT AND TRADEMARK OFFICE
P.O. BOX 1450
ALEXANDRIA, VA 22313-1450
www.uspto.gov

PATTERSON & SHERIDAN, L.L.P.
3040 POST OAK BOULEVARD
SUITE 1500
HOUSTON, TX 77056

COPY MAILED

FEB 0 8 2008

OFFICE OF PETITIONS

In re Application of :
Elasabeth Evertsz et al. :
Application No. 11/413,628 : DECISION ON PETITION
Filed: April 28, 2006 : TO WITHDRAW
Attorney Docket No. 023004.0116PTUS : FROM RECORD
:

This is a decision on the Request to Withdraw as attorney or agent under 37 C.F.R. § 1.36(b) or 37 C.F.R. § 10.40 filed June 12, 2006.

The request is **APPROVED**.

A grantable request to withdraw as attorney/agent of record must be signed by every attorney/agent seeking to withdraw or contain a clear indication that one attorney is signing on behalf of another/others. A request to withdraw will not be approved unless at least 30 (thirty) days would remain between the date of approval and the later of the expiration date of a time to file a response or the expiration date of the maximum time period which can be extended under 37 C.F.R. § 1.136(a).

The request was signed by B. Todd Patterson, on behalf of all attorneys/agents of record. All attorneys/agents have been withdrawn.

The request to change correspondence address has been accepted because the Oath and Declaration filed on December 19, 2006 appointed Patton Boggs, LLP as attorneys of record.

A non-final rejection was mailed on January 24, 2008. Failure to timely respond will result in the abandonment of this application.

Telephone inquires concerning this decision should be directed to Kimberly Inabinet at 571-272-4618.

Kimberly Inabinet
Petitions Examiner
Office of Petitions

cc: Patton Boggs, LLP
8484 Westpark Drive
Suite 900
McLean, VA 22102

UNITED STATES PATENT AND TRADEMARK OFFICE

Commissioner for Patents
United States Patent and Trademark Office
P.O. Box 1450
Alexandria, VA 22313-1450
www.uspto.gov

ANTHONY JOHNSON
4319 CLARENDON RD
BROOKLYN, NY 11203

MAILED

MAR 16 2009

OFFICE OF PETITIONS

In re Application of :
Anthony Johnson :
Application No. 11/413,653 : ON PETITION
Filed: April 29, 2006 :
Attorney Docket No. :

This is in response to the communication, filed September 22, 2008, to revive the above-identified application, which is being treated as a petition to withdraw the holding of abandonment.

The petition is **DISMISSED**.

Any request for reconsideration of this decision should be submitted within two (2) months from the mail date of this decision and be entitled "Renewed Petition to Withdraw the Holding of Abandonment under 37 CFR 1.181." *See* 37 CFR 1.181(f).

On February 25, 2008, the Office mailed a non-final Office action, which set a three month shortened statutory period to reply. The application became abandoned on May 26, 2008, for failure to submit a timely response to the non-final Office action. On September 18, 2008, the Office mailed a Notice of Abandonment.

In the present petition, petitioner requests that the Office withdraw the holding of abandonment due to nonreceipt of the non-final Office action. Specifically, petitioner states that he did not received the non-final Office action.

DISCUSSION OF PETITION TO WITHDRAW THE HOLDING OF ABANDONMENT

A review of the record indicates no irregularity in the mailing of the non-final Office action, and in the absence of any irregularity in the mailing, there is a strong presumption that the Office action was properly mailed to the address of record.

As petitioner is a pro-se applicant, the Office understands that petitioner may not keep a formal docket record system for his correspondence. Nevertheless, petitioner must provide some sort of showing explaining the manner in which petitioner receives mail from the USPTO, maintains

files for patent matters, and treats mail received for such matter. Specifically, petitioner must explain the system for keeping track of patent matters - where petitioner keeps the correspondence; where he writes down due dates; how he knows replies are due, etc. In essence, petitioner must explain how he reminds himself of response due dates and show that the due date for the non-final Office action of February 25, 2008, was not entered into that system. Petitioner should include any available documentary evidence of the mail received, covering a reasonable period after February 25, 2008, to demonstrate nonreceipt of the non-final Office action. Petitioner should also provide the USPTO with copies of any records or other methods, which could serve as a reminder of the due date for a response to an Office action, and where petitioner would have entered the receipt date of the Office action had petitioner received it (for example, a copy of the outside of a file or a calendar maintained by petitioner), if these documents are available. Furthermore, petitioner must include a statement from himself, or any other person at the address who may have handled the Office action, indicating that a search was conducted of the location where the correspondence from the USPTO would have been kept; however, the non-final Office action was not found. Lastly, petitioner must state that he was, in fact, residing at the correspondence address of record for a reasonable time after February 25, 2008; the period when he would have received the non-final Office action.

In the present petition, petitioner did not submit any statements, documentary evidence, or an explanation of his method for tracking due dates for filing responses to communications from the USPTO to show he did not receive the non-final Office action. Therefore, the petition to withdraw the holding of abandonment is **dismissed**. A copy of the non-final Office action accompanies this decision for petitioner's convenience.

ALTERNATIVE VENUE

Petitioner is strongly encouraged to consider filing a petition under 37 CFR 1.137(b) to revive an unintentionally abandoned application instead of filing a renewed petition under 37 CFR 1.181 or a petition under 37 CFR 1.137(a).

A grantable petition pursuant to 37 CFR 1.137(b) must be accompanied by:

> (1) The reply required to the outstanding Office action or notice, unless previously filed. In nonprovisional utility application abandoned for failure to respond to a non-final Office action, the required reply may be met by filing either (A) an argument or amendment under 37 CFR 1.111 or (B) a continuing application under 37 CFR 1.53(b).
>
> (2) The petition fee as set forth in 37 CFR 1.17(m), **$810.00 for a small entity**;
>
> (3) A statement that the entire delay in filing the required reply from the due date for the reply until the filing of a grantable petition was unintentional. The Director may require additional information where there is a question whether the delay was unintentional.

A form for filing a petition to revive an unintentionally abandoned application accompanies this decision for petitioner's convenience. If petitioner desires to file a petition under 37 CFR 1.137(b) instead of filing a request for reconsideration, petitioner must complete the enclosed petition form (PTO/SB/64) and pay the $810.00 petition fee.

Petitioner may wish to consider hiring a registered patent attorney or agent to assist in the prosecution of this application. Additionally, petitioner is encouraged to contact the Inventors Assistance Center (IAC) by telephone at 800-786-9199 or 571-272-1000, Monday through Friday from 8:30 AM to 5:30 PM (EST). The IAC provides patent information and services to the public and is staffed by former Supervisory Patent Examiners and experienced Primary Examiners who answer general questions concerning patent examining policy and procedure.

Further correspondence with respect to this matter should be addressed as follows:

By mail:	Mail Stop Petition Commissioner for Patents P.O. Box 1450 Alexandria, VA 22313-1450
By FAX:	(571) 273-8300 Attn: Office of Petitions
By hand:	Customer Service Window Randolph Building 401 Dulany Street Alexandria, VA 22314

Telephone inquiries related to this decision may be directed to the undersigned at (571) 272-3210.

Irvin Dingle
Petitions Examiner
Office of Petitions

Enclosures: Petition For Revival Of An Application For Patent Abandoned Unintentionally Under 37 CFR 1.137(b); Form PTO/SB/64, Privacy Act Statement; and a copy of the non-final Office action dated February 25, 2008.

UNITED STATES PATENT AND TRADEMARK OFFICE

UNITED STATES DEPARTMENT OF COMMERCE
United States Patent and Trademark Office
Address: COMMISSIONER FOR PATENTS
P.O. Box 1450
Alexandria, Virginia 22313-1450
www.uspto.gov

APPLICATION NO.	FILING DATE	FIRST NAMED INVENTOR	ATTORNEY DOCKET NO.	CONFIRMATION NO.
11/413,653	04/29/2006	Anthony Johnson		1972

7590 02/25/2008

ANTHONY JOHNSON
4319 CLARENDON RD
BROOKLYN, NY 11203

EXAMINER	
ACKUN, JACOB K	
ART UNIT	PAPER NUMBER
3728	
MAIL DATE	DELIVERY MODE
02/25/2008	PAPER

Please find below and/or attached an Office communication concerning this application or proceeding.

The time period for reply, if any, is set in the attached communication.

Office Action Summary	Application No.	Applicant(s)	
	11/413,653	JOHNSON, ANTHONY	
	Examiner	Art Unit	
	Jacob K. Ackun Jr.	3728	

-- The MAILING DATE of this communication appears on the cover sheet with the correspondence address --

Period for Reply

A SHORTENED STATUTORY PERIOD FOR REPLY IS SET TO EXPIRE 3 MONTH(S) OR THIRTY (30) DAYS, WHICHEVER IS LONGER, FROM THE MAILING DATE OF THIS COMMUNICATION.

- Extensions of time may be available under the provisions of 37 CFR 1.136(a). In no event, however, may a reply be timely filed after SIX (6) MONTHS from the mailing date of this communication.
- If NO period for reply is specified above, the maximum statutory period will apply and will expire SIX (6) MONTHS from the mailing date of this communication.
- Failure to reply within the set or extended period for reply will, by statute, cause the application to become ABANDONED (35 U.S.C. § 133). Any reply received by the Office later than three months after the mailing date of this communication, even if timely filed, may reduce any earned patent term adjustment. See 37 CFR 1.704(b).

Status

1)☐ Responsive to communication(s) filed on _____.

2a)☐ This action is **FINAL**. 2b)☒ This action is non-final.

3)☐ Since this application is in condition for allowance except for formal matters, prosecution as to the merits is closed in accordance with the practice under *Ex parte Quayle*, 1935 C.D. 11, 453 O.G. 213.

Disposition of Claims

4)☒ Claim(s) 1-9 is/are pending in the application.

4a) Of the above claim(s) _____ is/are withdrawn from consideration.

5)☐ Claim(s) _____ is/are allowed.

6)☒ Claim(s) 1-9 is/are rejected.

7)☐ Claim(s) _____ is/are objected to.

8)☐ Claim(s) _____ are subject to restriction and/or election requirement.

Application Papers

9)☐ The specification is objected to by the Examiner.

10)☐ The drawing(s) filed on _____ is/are: a)☐ accepted or b)☐ objected to by the Examiner.

Applicant may not request that any objection to the drawing(s) be held in abeyance. See 37 CFR 1.85(a).

Replacement drawing sheet(s) including the correction is required if the drawing(s) is objected to. See 37 CFR 1.121(d).

11)☐ The oath or declaration is objected to by the Examiner. Note the attached Office Action or form PTO-152.

Priority under 35 U.S.C. § 119

12)☐ Acknowledgment is made of a claim for foreign priority under 35 U.S.C. § 119(a)-(d) or (f).

a)☐ All b)☐ Some * c)☐ None of:

1.☐ Certified copies of the priority documents have been received.

2.☐ Certified copies of the priority documents have been received in Application No. _____.

3.☐ Copies of the certified copies of the priority documents have been received in this National Stage application from the International Bureau (PCT Rule 17.2(a)).

* See the attached detailed Office action for a list of the certified copies not received.

Attachment(s)

1) ☒ Notice of References Cited (PTO-892)
2) ☐ Notice of Draftsperson's Patent Drawing Review (PTO-948)
3) ☐ Information Disclosure Statement(s) (PTO/SB/08) Paper No(s)/Mail Date _____.
4) ☐ Interview Summary (PTO-413) Paper No(s)/Mail Date. _____.
5) ☐ Notice of Informal Patent Application
6) ☐ Other: _____.

1. Claims 1-9 are rejected under 35 U.S.C. 112, second paragraph, as being indefinite for failing to particularly point out and distinctly claim the subject matter which applicant regards as the invention. The claims are generally narrative and indefinite, failing to conform with current U.S. practice. They are replete with grammatical and idiomatic errors. The claims are replete with indefinite and functional or operational language. The structure which goes to make up the device must be clearly and positively specified. The structure must be organized and correlated in such a manner as to present a complete operative device. The claim(s) must be in one sentence form only. Note the format of the claims in the patent(s) cited.

2. The following is a quotation of the appropriate paragraphs of 35 U.S.C. 102 that form the basis for the rejections under this section made in this Office action:

> A person shall be entitled to a patent unless –
>
> (e) the invention was described in (1) an application for patent, published under section 122(b), by another filed in the United States before the invention by the applicant for patent or (2) a patent granted on an application for patent by another filed in the United States before the invention by the applicant for patent, except that an international application filed under the treaty defined in section 351(a) shall have the effects for purposes of this subsection of an application filed in the United States only if the international application designated the United States and was published under Article 21(2) of such treaty in the English language.
>
> (b) the invention was patented or described in a printed publication in this or a foreign country or in public use or on sale in this country, more than one year prior to the date of application for patent in the United States.

3. The following is a quotation of 35 U.S.C. 103(a) which forms the basis for all obviousness rejections set forth in this Office action:

> (a) A patent may not be obtained though the invention is not identically disclosed or described as set forth in section 102 of this title, if the differences between the subject matter sought to be patented and the prior art are such that the subject matter as a whole would have been obvious at the time the invention was made to a person

having ordinary skill in the art to which said subject matter pertains. Patentability shall not be negatived by the manner in which the invention was made.

4. Claims 1-9 are rejected under 35 U.S.C. 102(b or e) as anticipated by or, in the alternative, under 35 U.S.C. 103(a) as obvious over Headrick, Stravitz or Page. Each reference discloses containers comprising compartments, at least one of which holds wipes. The containers all have clips for attachment to a belt.

5. Any inquiry concerning this communication or earlier communications from the examiner should be directed to Jacob K. Ackun Jr. whose telephone number is (571)272-4418. The examiner can normally be reached on Monday through Friday 8.30AM-5.00PM.

If attempts to reach the examiner by telephone are unsuccessful, the examiner's supervisor, Mickey Yu can be reached on (571)272-4562. The fax phone number for the organization where this application or proceeding is assigned is 571-273-8300.

Information regarding the status of an application may be obtained from the Patent Application Information Retrieval (PAIR) system. Status information for published applications may be obtained from either Private PAIR or Public PAIR. Status information for unpublished applications is available through Private PAIR only. For more information about the PAIR system, see http://pair-direct.uspto.gov. Should you have questions on access to the Private PAIR system, contact the Electronic Business Center (EBC) at 866-217-9197 (toll-free). If you would like assistance from a USPTO Customer Service Representative or access to the automated information system, call 800-786-9199 (IN USA OR CANADA) or 571-272-1000.

J.A.

/Jacob K. Ackun Jr./

Primary Examiner, Art Unit 3728

UNITED STATES PATENT AND TRADEMARK OFFICE

UNITED STATES DEPARTMENT OF COMMERCE
United States Patent and Trademark Office
Address: COMMISSIONER FOR PATENTS
P.O. Box 1450
Alexandria, Virginia 22313-1450
www.uspto.gov

CARR & FERRELL LLP
2200 GENG ROAD
PALO ALTO, CA 94303

Mail Date: 04/21/2010

Applicant	: Victor Shtrom	: DECISION ON REQUEST FOR
Patent Number	: 7639106	: RECALCULATION of PATENT
Issue Date	: 12/29/2009	: TERM ADJUSTMENT IN VIEW
Appliction No	: 11/413,670	: OF WYETH AND NOTICE OF INTENT TO
Filed	: 04/28/2006	: ISSUE CERTIFICATE OF CORRECTION
		:

The Request for Recalculation is **GRANTED** to the extent indicated.

The patent term adjustment has been determined to be **73** days. The USPTO will *sua sponte* issue a certificate of correction reflecting the amount of PTA days determined by the recalculation.

Prior to the issuance of the certificate of correction, the USPTO will afford patentee an opportunity to be heard and request reconsideration. Accordingly, patentee has **one month or thirty (30) days**, whichever is longer, to file a request for reconsideration of this patent term adjustment calculation. See 35 U.S.C. 154(b)(3)(B)(ii) and 37 CFR 1.322(a)(4). No extensions of time will be granted under 37 CFR 1.136.

Patentee should use document code PET.OP if electronically filing a request for reconsideration of this patent term adjustment calculation. The patentee must also include the information required by 37 CFR 1.705(b)(2) and the fee required by 37 CFR 1.18(e). If patentee does not file a timely request for reconsideration of this patent term adjustment calculation including the information required by 37 CFR 1.705(b)(2) and the fee required by 37 CFR 1.18(e), the USPTO will issue a certificate of correction reflecting the PTA determination noted above.

Patentee should be aware that in order to preserve the right to review in the United States District Court for the District of Columbia of the USPTO patent term adjustment determination, patentee must ensure that he or she also take the steps required under 35 U.S.C. 154(b)(4)(A) in a timely manner. Nothing in the request for recalculation should be construed as providing an alternative time frame for commencing a civil action under 35 U.S.C. 154(b)(4)(A).

Any questions concerning this decision should be directed to the Office of Patent Legal Administration at 571-272-7702.

SPE RESPONSE FOR CERTIFICATE OF CORRECTION

Paper No.:

DATE : November 12, 2008

TO SPE OF : ART UNIT 3673

SUBJECT : Request for Certificate of Correction on Patent No.: 7425003 B2

A response is requested with respect to the accompanying request for a certificate of correction.

Please complete this form and return with file, within **7** days to:
Certificates of Correction Branch - PK 3-910
Palm location **7590** - Tel. No. 305-8201

With respect to the change(s) requested, correcting Office and/or Applicant's errors, should the patent read as shown in the certificate of correction? No new matter should be introduced, nor should the scope or meaning of the claims be changed.

Thank You For Your Assistance **Certificates of Correction Branch**

The request for issuing the above-identified correction(s) is hereby:
Note your decision on the appropriate box.

☒ **Approved** **All** changes apply.

☐ **Approved in Part** Specify below which changes **do not** apply.

☐ **Denied** State the reasons for denial below.

Comments:

SPE: /Patricia L. Engle/ **Art Unit** 3673

UNITED STATES PATENT AND TRADEMARK OFFICE

UNITED STATES DEPARTMENT OF COMMERCE
United States Patent and Trademark Office
Address: COMMISSIONER FOR PATENTS
P.O. Box 1450
Alexandria, Virginia 22313-1450
www.uspto.gov

KNOBBE MARTENS OLSON & BEAR LLP
2040 MAIN STREET
FOURTEENTH FLOOR
IRVINE, CA 92614

Mail Date: 04/29/2010

Applicant	: Bryan Patrick Flaherty	: DECISION ON REQUEST FOR
Patent Number	: 7618375	: RECALCULATION of PATENT
Issue Date	: 11/17/2009	: TERM ADJUSTMENT IN VIEW
Application No	: 11/413,718	: OF WYETH AND NOTICE OF INTENT TO
Filed	: 04/28/2006	: ISSUE CERTIFICATE OF CORRECTION
		:

The Request for Recalculation is **GRANTED** to the extent indicated.

The patent term adjustment has been determined to be **480** days. The USPTO will *sua sponte* issue a certificate of correction reflecting the amount of PTA days determined by the recalculation.

Prior to the issuance of the certificate of correction, the USPTO will afford patentee an opportunity to be heard and request reconsideration. Accordingly, patentee has **one month or thirty (30) days**, whichever is longer, to file a request for reconsideration of this patent term adjustment calculation. See 35 U.S.C. 154(b)(3)(B)(ii) and 37 CFR 1.322(a)(4). No extensions of time will be granted under 37 CFR 1.136.

Patentee should use document code PET.OP if electronically filing a request for reconsideration of this patent term adjustment calculation. The patentee must also include the information required by 37 CFR 1.705(b)(2) and the fee required by 37 CFR 1.18(e). If patentee does not file a timely request for reconsideration of this patent term adjustment calculation including the information required by 37 CFR 1.705(b)(2) and the fee required by 37 CFR 1.18(e), the USPTO will issue a certificate of correction reflecting the PTA determination noted above.

Patentee should be aware that in order to preserve the right to review in the United States District Court for the District of Columbia of the USPTO patent term adjustment determination, patentee must ensure that he or she also take the steps required under 35 U.S.C. 154(b)(4)(A) in a timely manner. Nothing in the request for recalculation should be construed as providing an alternative time frame for commencing a civil action under 35 U.S.C. 154(b)(4)(A).

Any questions concerning this decision should be directed to the Office of Patent Legal Administration at 571-272-7702.

UNITED STATES PATENT AND TRADEMARK OFFICE

Commissioner for Patents
United States Patent and Trademark Office
P.O. Box 1450
Alexandria, VA 22313-1450
www.uspto.gov

BERNHARD P. MOLLDREM, JR.
224 HARRISON STREET
SUITE 200
SYRACUSE, NY 13202

COPY MAILED

OCT 11 2007

OFFICE OF PETITIONS

In re Application of	:	
Carmen P. Logan, Jr	:	
Application No. 11/413,727	:	DECISION ON PETITION
Filed: April 28, 2006	:	TO MAKE SPECIAL UNDER
Attorney Docket No. 718.002PA	:	37 CFR 1.102(c)(1)
	:	

This is a decision on the petition under 37 CFR 1.102(c)(1), filed April 28, 2006, to make the above-identified application special based on applicant's age as set forth in M.P.E.P. § 708.02, Section IV.

The petition is **GRANTED**.

A grantable petition to make an application special under 37 CFR 1.102(c)(1) and MPEP § 708.02, Section IV: Applicant's Age must be accompanied by evidence showing that at least one of the applicants is 65 years of age, or more, such as a birth certificate or a statement by applicant. No fee is required

The instant petition includes a photocopy of a birth certificate and driver's license. Accordingly, the above-identified application has been accorded "special" status.

Telephone inquiries concerning this decision should be directed to Kimberly Inabinet at 571-272-4618.

All other inquiries concerning either the examination or status of the application should be directed to the Technology Center.

The application is being forwarded to the Technology Center Art Unit 2168 for action on the merits commensurate with this decision.

Kimberly Inabinet
Petitions Examiner
Office of Petitions

694.009PA

IN THE UNITED STATES PATENT AND TRADEMARK OFFICE

Applicant: Jeffrey Hill
Ser. No. - 11/413728
Filed concurrently herewith 4-28-06
For: Silencer for Dust Collection System

Technology Center 1700
Art Unit -- 1724
Hopkins, Robert

Petition to Make Special on Grounds of Environmental Quality

Hon. Commissioner for Patents
Alexandria VA 22313-1450

Applicant hereby requests that this Application be made special and examined forthwith.

Applicant urges that special status is justified on the grounds of Environmental Quality (MPEP 708.02, paragraph V).

Applicant's invention concerns a dust collection system for wood finishing equipment, i.e., sanders, planers, and other similar sanding equipment, and is important for environmental quality in that wood dust is a carcinogen and can affect the health of both the sanding machine operators and the residents of the occupied space where the woodworking operation takes place.

Applicant's improvement involves inserting a small cylinder of an acoustic foam into the filter following a cyclonic separator that is used in a wood shop or other place where there is dust-generating equipment, i.e., sanding machine. The silencer makes a significant reduction in ambient workspace noise. This encourages use of the equipment in a workspace. Use of the equipment itself is important because about 99 percent of the dust that is entrained the air flow is separated out and is deposited in the barrel or drum below the cyclonic separator.

The dust collection system of this invention takes what is ordinarily an extremely dusty operation and makes it virtually dustless. The silencer feature absorbs the blower noise, thus improving the workspace comfort level for the employee, and avoiding some of the hazards of environmental noise. At the same time, the simplicity of the silencer feature makes it very cost

MAY 25 2006
PETITION GRANTED

William Krynski,
Special Program Examiner
Technology Center 1700

IN THE UNITED STATES PATENT AND TRADEMARK OFFICE

Applicant: Robert M. Witter
Ser. No. - 11/413729
Filed concurrently herewith 4-28-06
For: Auxiliary Dust Collection System

Technology Center 1700
Art Unit -- 1724

Petition to Make Special on Grounds of Environmental Quality

Hon. Commissioner for Patents
Alexandria VA 22313-1450

Applicant hereby requests that this Application be made special and examined forthwith.

Applicant urges that special status is justified on the grounds of Environmental Quality (MPEP 708.02, paragraph V).

Applicant's invention concerns a dust collection system for wood finishing equipment, i.e., sanders, planers, and other similar sanding equipment, and is important for environmental quality in that wood dust is a carcinogen and can affect the health of both the sanding machine operators and the residents of the occupied space where the woodworking operation takes place.

Applicant's improvement involves interposing a small cyclone separator between the dust-generating equipment, i.e., sanding machine, and a vacuum source. About 99 percent of the dust that is entrained the air flow is separated out and is deposited in the barrel or drum below the cyclonic separator. Because of the efficiency in removing the dust, for machines with an internal blower, the system can omit the vacuum source, and replace that with a cartridge air filter, as shown e.g. in Fig. 7.

The current means of dust collection is to attach a cloth bag to the sander. The cloth bag captures the larger wood particles only, and most of the more dangerous wood dust (including the micron size particles) pass through and return to the room air.

The dust collection system of this invention takes what is ordinarily an extremely dusty operation and makes it virtually dustless. At the same time, the relatively low cost of the dust collection arrangement of the present invention would entice more wood shops to install it on their hand-held sanding equipment. This invention makes dust collections systems available to home and commercial wood shops, and improves the working and living conditions of a

PETITION GRANTED

William Krynski
Special Program Examiner
Technology Center 1700
FEB 0 6 2007

UNITED STATES PATENT AND TRADEMARK OFFICE

Commissioner for Patents
United States Patent and Trademark Office
P.O. Box 1450
Alexandria, VA 22313-1450
www.uspto.gov

FENWICK & WEST LLP
SILICON VALLEY CENTER
801 CALIFORNIA STREET
MOUNTAIN VIEW, CA 94041

COPY MAILED

MAR 0 6 2008

OFFICE OF PETITIONS

In re Application of
Fei HUANG, et al
Application No. 11/413,754
Filed: April 27, 2006
Attorney Docket No. 24780-10918

DECISION ON PETITION
TO WITHDRAW
FROM RECORD

This is a decision on the Request to Withdraw as attorney or agent of record under 37 C.F.R. § 1.36(b), filed December 5, 2007.

The request is **DISMISSED** as moot.

A review of the file record indicates that the power of attorney to Fenwick & West LLP, has been revoked by the applicant of the patent application on February 20, 2008. Accordingly, the request to withdraw under 37 C.F.R. § 1.36(b) is moot.

The correspondence address of record has been changed and the new correspondence address is the address indicated below.

Telephone inquiries concerning this decision should be directed to undersigned at 571-272- 6735.

Diane Goodwyn
Petitions Examiner
Office of Petitions

cc: JAMES K. OKAMOTO, PH.D.
OKAMOTO & BENEDICTO LLP
1737 N. FIRST STREET, SUITE 270
SAN JOSE, CA 95112

UNITED STATES PATENT AND TRADEMARK OFFICE

UNITED STATES DEPARTMENT OF COMMERCE
United States Patent and Trademark Office
Address: COMMISSIONER FOR PATENTS
P.O. Box 1450
Alexandria, Virginia 22313-1450
www.uspto.gov

APPLICATION NUMBER	FILING OR 371(C) DATE	FIRST NAMED APPLICANT	ATTY. DOCKET NO./TITLE
11/413,754	04/27/2006	Fei Huang	24780-10918

CONFIRMATION NO. 1603

POA ACCEPTANCE LETTER

31894
OKAMOTO & BENEDICTO, LLP
P.O. BOX 641330
SAN JOSE, CA 95164

OC000000028664693

Date Mailed: 03/06/2008

NOTICE OF ACCEPTANCE OF POWER OF ATTORNEY

This is in response to the Power of Attorney filed 02/20/2008.

The Power of Attorney in this application is accepted. Correspondence in this application will be mailed to the above address as provided by 37 CFR 1.33.

/dcgoodwyn/

Office of Initial Patent Examination (571) 272-4000 or 1-800-PTO-9199

UNITED STATES PATENT AND TRADEMARK OFFICE

UNITED STATES DEPARTMENT OF COMMERCE
United States Patent and Trademark Office
Address: COMMISSIONER FOR PATENTS
P.O. Box 1450
Alexandria, Virginia 22313-1450
www.uspto.gov

APPLICATION NUMBER	FILING OR 371(C) DATE	FIRST NAMED APPLICANT	ATTY. DOCKET NO./TITLE
11/413,754	04/27/2006	Fei Huang	24780-10918

CONFIRMATION NO. 1603

POWER OF ATTORNEY NOTICE

758
FENWICK & WEST LLP
SILICON VALLEY CENTER
801 CALIFORNIA STREET
MOUNTAIN VIEW, CA 94041

OC00000028664667

Date Mailed: 03/06/2008

NOTICE REGARDING CHANGE OF POWER OF ATTORNEY

This is in response to the Power of Attorney filed 02/20/2008.

- The Power of Attorney to you in this application has been revoked by the assignee who has intervened as provided by 37 CFR 3.71. Future correspondence will be mailed to the new address of record(37 CFR 1.33).

/dcgoodwyn/

Office of Initial Patent Examination (571) 272-4000 or 1-800-PTO-9199

UNITED STATES PATENT AND TRADEMARK OFFICE

UNITED STATES DEPARTMENT OF COMMERCE
United States Patent and Trademark Office
Address: COMMISSIONER FOR PATENTS
P.O. Box 1450
Alexandria, Virginia 22313-1450
www.uspto.gov

PACESETTER, INC.
15900 VALLEY VIEW COURT
SYLMAR, CA 91392-9221

Mail Date: 04/21/2010

Applicant	: Mark W. Kroll	: DECISION ON REQUEST FOR
Patent Number	: 7596410	: RECALCULATION of PATENT
Issue Date	: 09/29/2009	: TERM ADJUSTMENT IN VIEW
Appliction No	: 11/413,772	: OF WYETH AND NOTICE OF INTENT TO
Filed	: 04/28/2006	: ISSUE CERTIFICATE OF CORRECTION
		:

The Request for Recalculation is **GRANTED** to the extent indicated.

The patent term adjustment has been determined to be **811** days. The USPTO will *sua sponte* issue a certificate of correction reflecting the amount of PTA days determined by the recalculation.

Prior to the issuance of the certificate of correction, the USPTO will afford patentee an opportunity to be heard and request reconsideration. Accordingly, patentee has **one month or thirty (30) days**, whichever is longer, to file a request for reconsideration of this patent term adjustment calculation. See 35 U.S.C. 154(b)(3)(B)(ii) and 37 CFR 1.322(a)(4). No extensions of time will be granted under 37 CFR 1.136.

Patentee should use document code PET.OP if electronically filing a request for reconsideration of this patent term adjustment calculation. The patentee must also include the information required by 37 CFR 1.705(b)(2) and the fee required by 37 CFR 1.18(e). If patentee does not file a timely request for reconsideration of this patent term adjustment calculation including the information required by 37 CFR 1.705(b)(2) and the fee required by 37 CFR 1.18(e), the USPTO will issue a certificate of correction reflecting the PTA determination noted above.

Patentee should be aware that in order to preserve the right to review in the United States District Court for the District of Columbia of the USPTO patent term adjustment determination, patentee must ensure that he or she also take the steps required under 35 U.S.C. 154(b)(4)(A) in a timely manner. Nothing in the request for recalculation should be construed as providing an alternative time frame for commencing a civil action under 35 U.S.C. 154(b)(4)(A).

Any questions concerning this decision should be directed to the Office of Patent Legal Administration at 571-272-7702.

UNITED STATES PATENT AND TRADEMARK OFFICE

UNITED STATES DEPARTMENT OF COMMERCE
United States Patent and Trademark Office
Address: COMMISSIONER FOR PATENTS
P.O. Box 1450
Alexandria, Virginia 22313-1450
www.uspto.gov

SCHWEGMAN, LUNDBERG & WOESSNER/SAP
P.O. BOX 2938
MINNEAPOLIS, MN 55402

Mail Date: 04/20/2010

Applicant	: Chavdar S. Baikov	: DECISION ON REQUEST FOR
Patent Number	: 7587425	: RECALCULATION of PATENT
Issue Date	: 09/08/2009	: TERM ADJUSTMENT IN VIEW
Appliction No	: 11/413,789	: OF WYETH AND NOTICE OF INTENT TO
Filed	: 04/28/2006	: ISSUE CERTIFICATE OF CORRECTION
		:

The Request for Recalculation is **GRANTED** to the extent indicated.

The patent term adjustment has been determined to be **284** days. The USPTO will *sua sponte* issue a certificate of correction reflecting the amount of PTA days determined by the recalculation.

Prior to the issuance of the certificate of correction, the USPTO will afford patentee an opportunity to be heard and request reconsideration. Accordingly, patentee has **one month or thirty (30) days**, whichever is longer, to file a request for reconsideration of this patent term adjustment calculation. See 35 U.S.C. 154(b)(3)(B)(ii) and 37 CFR 1.322(a)(4). No extensions of time will be granted under 37 CFR 1.136.

Patentee should use document code PET.OP if electronically filing a request for reconsideration of this patent term adjustment calculation. The patentee must also include the information required by 37 CFR 1.705(b)(2) and the fee required by 37 CFR 1.18(e). If patentee does not file a timely request for reconsideration of this patent term adjustment calculation including the information required by 37 CFR 1.705(b)(2) and the fee required by 37 CFR 1.18(e), the USPTO will issue a certificate of correction reflecting the PTA determination noted above.

Patentee should be aware that in order to preserve the right to review in the United States District Court for the District of Columbia of the USPTO patent term adjustment determination, patentee must ensure that he or she also take the steps required under 35 U.S.C. 154(b)(4)(A) in a timely manner. Nothing in the request for recalculation should be construed as providing an alternative time frame for commencing a civil action under 35 U.S.C. 154(b)(4)(A).

Any questions concerning this decision should be directed to the Office of Patent Legal Administration at 571-272-7702.

UNITED STATES PATENT AND TRADEMARK OFFICE

UNITED STATES DEPARTMENT OF COMMERCE
United States Patent and Trademark Office
Address: COMMISSIONER FOR PATENTS
P.O. Box 1450
Alexandria, Virginia 22313-1450
www.uspto.gov

APPLICATION NO.	FILING DATE	FIRST NAMED INVENTOR	ATTORNEY DOCKET NO.	CONFIRMATION NO.
11/413,792	04/28/2006	Krzysztof Nauka	200505248-1	3002

7590 04/21/2008

HEWLETT PACKARD COMPANY
P O BOX 272400, 3404 E. HARMONY ROAD
INTELLECTUAL PROPERTY ADMINISTRATION
FORT COLLINS, CO 80527-2400

EXAMINER	
RONESI, VICKEY M	

ART UNIT	PAPER NUMBER
1796	

NOTIFICATION DATE	DELIVERY MODE
04/21/2008	ELECTRONIC

DECISION GRANTING PETITION UNDER 37 CFR 1.138(d)

The declaration of express abandonment is recognized

This is in response to the petition under 37 CFR 1.138(d), requesting for a refund of any previously paid search fee and excess claims fee in the above-identified application.

The petition is granted.

The express abandonment is recognized. Any previously paid search fee and excess claims fee are hereby refunded.

Telephone inquiries should be directed to the Office of Data Management at (571) 272-4200.

Patent Publication Branch
Office of Data Management

11413792

150.00 CR

UNITED STATES PATENT AND TRADEMARK OFFICE

Commissioner for Patents
United States Patent and Trademark Office
P.O. Box 1450
Alexandria, VA 22313-1450
www.uspto.gov

HEWLET PACKARD COMPANY
PO BOX 272400, 3404 E. HARMONY ROAD
INTELLECTUAL PROPERTY ADMINISTRATION
FORT COLLINS CO 80527-2400

COPY MAILED

APR 30 2009

OFFICE OF PETITIONS

In re Application of:
Krzysztof Nauka et al.
Application No. 11/413,792
Filed: 28 April 2006
Attorney Docket No. 200505248-1

DECISION ON PETITION

This is a decision on the petition under the unintentional provisions of 37 CFR 1.137(b), filed June 23, 2008, to revive the above-identified application.

The petition is **DISMISSED**.

Any request for reconsideration of this decision must be submitted within TWO (2) MONTHS from the mail date of this decision. Extensions of time under 37 CFR 1.136(a) are permitted. The reconsideration request should include a cover letter entitled "Renewed Petition under 37 CFR 1.137(b)." This is **not** a final agency action within the meaning of 5 U.S.C. § 704.

The above-identified application became abandoned in response to the petition under 1.138(d) filed April 1, 2008 requesting express abandonment to avoid publication of the above-identified application. The express abandonment was recognized on April 21, 2008. Accordingly, the above identified application became abandoned on April 21, 2008.

A grantable petition under 37 CFR 1.137(b) must be accompanied by: (1) the required reply, unless previously filed; (2) the petition fee as set forth in 37 CFR 1.17(m); (3) a statement that the entire delay in filing the required reply from the due date for the reply until the filing of a grantable petition pursuant to 37 CFR 1.137(b) was unintentional; and (4) any terminal disclaimer (and fee as set forth in 37 CFR 1.20(d)) required by 37 CFR 1.137(d). Where there is a question as to whether either the abandonment or the delay in filing a petition under 37 CFR 1.137 was unintentional, the Director may require additional information. *See* MPEP 711.03(c)(II)(C) and (D). The instant petition lacks item (3).

The showing of record raises questions as to whether the abandonment of this application was unintentional within the meaning of 35 USC 41(a)(7) and 37 CFR 1.137(b).

Petitioner asserts that on April 4, 2008 applicant submitted a Request for Express Abandonment. Shortly thereafter applicant realized that the request was an error and applicant called the Patent Office to circumvent the abandonment of the application. Unfortunately, applicant's attempt was not successful and the Petition for abandonment was granted on April 21, 2008.

MPEP 711.01 states:

> The applicant (acquiesced in by an assignee of record), or the attorney/agent of record, if any can sign an express abandonment. It is imperative that the attorney or agent of record exercise every precaution in ascertaining that the abandonment of the application is in accordance with the desires and best interests of the applicant prior to signing a letter of express abandonment of a patent application. Moreover, special care should be taken to ensure that the appropriate application is correctly identified in the letter of abandonment.

A thorough review of USPTO records shows that the petitioner filed in the above-identified application, on April1, 2008, a petition for express abandonment under 37 CFR 1.138(c). The office recognized the express abandonment in the above-identified application on April 21, 2008.

Initially it is noted that the petitioner was notified by the Office of abandonment of this application on April 22, 2008, no petition to revive this application was filed until June 23, 2008.

Petitioner has filed no evidence, which would lead one to reasonably believe that this application was unintentionally abandoned. In this regard, petitioner has failed to submit any evidence of the circumstances surrounding the abandonment of this application. Additionally, no specific explanation has been given as to how the error in filing a request for express abandonment regarding this application occurred.

35 U.S.C. § 41(a)(7) applies to the situation of the above-identified application (i.e., to the revival of an abandoned application), however, it precludes the Director from reviving the above-identified application. This is because § 41(a)(7) only authorizes the Director to revive an "unintentionally abandoned application." The legislative history of Public Law 97-247 reveals that the purpose of 35 U.S.C. § 41(a)(7) is to permit the Office to have more discretion than in 35 U.S.C. §§ 133 or 151 to revive abandoned applications in appropriate circumstances, but places a limit on this discretion, stating that "[u]nder this section a petition accompanied by either a fee of $500 or a fee of $50 would not be granted where the abandonment or the failure to pay the fee for issuing the patent was intentional as opposed to being unintentional or unavoidable." [emphasis added]. See H.R. Rep. No. 542, 97th Cong., 2d Sess. 6-7 (1982), reprinted in 1982 U.S.C.C.A.N. 770-71. The revival of an intentionally abandoned application, as this application was, is antithetical to the meaning and intent of the statute and regulation.

35 U.S.C. § 41(a)(7) authorizes the Commissioner to accept a petition "for the revival of an unintentionally abandoned application for a patent." As amended December 1, 1997, 37 CFR

1.137(b)(3) provides that a petition under 37 CFR 1.137(b) must be accompanied by a statement that the delay was unintentional, but provides that "[t]he Commissioner may require additional information where there is a question whether the delay was unintentional." Where there is a question whether the delay was unintentional, the petitioner must meet the burden of establishing that the delay was unintentional within the meaning of 35 U.S.C. § 41(a)(7) and 37 CFR 1.137(b). See In re Application of G, 11 USPQ2d 1378, 1380 (Comm'r Pats. 1989). Here in view of Express Abandonment of record, there is a question whether the entire delay was unintentional.

Any renewed petition may be addressed as follows:

By Mail: Mail Stop PETITION
Commissioner for Patents
P. O. Box 1450
Alexandria, VA 22313-1450

By hand: U. S. Patent and Trademark Office
Customer Service Window, Mail Stop Petitions
Randolph Building
401 Dulany Street
Alexandria, VA 22314

The centralized facsimile number is **(571) 273-8300.**

Correspondence regarding this decision may also be filed through the electronic filing system of the USPTO.

To expedite consideration, petitioner may wish to contact the undersigned regarding the filing of the renewed petition under 37 CFR 1.137(b).

Telephone inquiries concerning this decision should be directed to Zohreh Fay at 571-272-6051 or in her absence to the undersigned at (571) 272-7099.

David Bucci
Petitions Examiner
Office of Petitions

UNITED STATES PATENT AND TRADEMARK OFFICE

Commissioner for Patents
United States Patent and Trademark Office
P.O. Box 1450
Alexandria, VA 22313-1450
www.uspto.gov

TRASK BRITT
P.O. BOX 2550
SALT LAKE CITY, UT 84110

COPY MAILED

FEB 1 1 2008

OFFICE OF PETITIONS

In re Application of	:	
ALVARADO, et al.	:	
Application No. 11/413,795	:	DECISION ON PETITION
Filed: April 28, 2006	:	TO WITHDRAW
Attorney Docket No. **21101.0123U2**	:	FROM RECORD
	:	

This is a decision on the Request to Withdraw as attorney or agent of record under 37 C.F.R. § 1.36(b), filed July 19, 2007.

The request is **NOT APPROVED** as moot.

A review of the file record indicates that the power of attorney to **TRASK BRITT** has been revoked and re-appointed by the assignee of the patent application on September 24, 2007. Accordingly, the request to withdraw under 37 C.F.R. § 1.36(b) is moot.

All future communications from the Office will continue to be directed to the below-listed address until otherwise notified by applicant.

Telephone inquires concerning this decision should be directed to the undersigned at (571) 272-7253.

Monica A. Graves
Petitions Examiner
Office of Petitions

cc: **NEEDLE & ROSENBERG, PC**
999 PEACHTREE STREET
ATLANTA, GA 30309-3915

UNITED STATES PATENT AND TRADEMARK OFFICE

Commissioner for Patents
United States Patent and Trademark Office
P.O. Box 1450
Alexandria, VA 22313-1450
www.uspto.gov

COPY MAILED

JUN 13 2007

OFFICE OF PETITIONS

MORRISON & FOERSTER LLP
755 PAGE MILL RD
PALO ALTO, CA 94304-1018

In re Application of
ROSENTHAL, Arnon et al.
Application No. 11/413, 817
Filed: April 28, 2006
Attorney Docket No. **514712002800**

DECISION ON PETITION
TO WITHDRAW
FROM RECORD

This is a decision on the Request to Withdraw as attorney or agent of record under 37 C.F.R. § 1.36(b), filed March 16, 2007.

The request is **NOT APPROVED** as moot.

A review of the file record indicates that the power of attorney to Morrison & Foerster LLP has been revoked by the assignee of the patent application on April 20, 2007. Accordingly, the request to withdraw under 37 C.F.R. § 1.36(b) is moot.

All future communications from the Office will continue to be directed to the below-listed address until otherwise notified by applicant.

Telephone inquires concerning this decision should be directed to Michelle R. Eason at 571-272-4231.

Terri Williams
Petitions Examiner
Office of Petitions

cc: **PFIZER INC**
150 EAST 42ND STREET
5TH FLOOR - STOP 49
NEW YORK NY 10017-5612

UNITED STATES PATENT AND TRADEMARK OFFICE

Commissioner for Patents
United States Patent and Trademark Office
P.O. Box 1450
Alexandria, VA 22313-1450
www.uspto.gov

PFIZER INC
Mary J Hosley
150 EAST 42ND STREET
MS: 150/02/E112
NEW YORK NY 10017-5612

MAILED

JUN 18 2010

OFFICE OF PETITIONS

In re Application of :
ROSENTHAL et al. :
Application No. 11/413,817 : ON APPLICATION FOR
Filed: April 28, 2006 : PATENT TERM ADJUSTMENT
Atty. Docket No. PC19497A :

This is in response to the "REQUEST FOR RECONSIDERATION OF PATENT TERM ADJUSTMENT UNDER 37 CFR § 1.705(b)" filed February 17, 2010. Applicants submit that the correct patent term adjustment to be indicated on the patent is seven hundred eighty-one (781) days, not three hundred fifty-four (354) days as calculated by the Office as of the mailing of the initial determination of patent term adjustment. Applicants seek this correction solely on the basis that the Office will take in excess of three years to issue this patent.

As the instant application for patent term adjustment requests reconsideration of the patent term adjustment as it relates to the Office's failure to issue the patent within three years of the filing date, the application for patent term adjustment under 37 CFR 1.705(b) is **DISMISSED as PREMATURE**.

Knowledge of the actual date the patent issues is required to calculate the amount, if any, of additional patent term patentees are entitled to for Office failure to issue the patent within three years. See 37 CFR 1.702(b). (This is true even where a request for continued examination (RCE) was filed). The computer will not undertake the § 1.702(b) calculation until the actual date of issuance of the patent has been determined. Likewise, the computer will not calculate any further Office delay under 37 CFR 1.702(a)(4) or applicant delay under 37 CFR

1.704(c)(10) until the actual date of issuance of the patent has been determined. As such, the Office cannot make a determination on the correctness of the patent term adjustment until the patent has issued.

Requesting reconsideration of the patent term adjustment to be indicated on the patent under 37 CFR 1.705(b) based on the initial determination of patent term adjustment and a projected issuance date of the patent (or even the filing date of the request for continued examination) is premature. Accordingly, it is appropriate to dismiss such a request as premature.

Rather than file an application for patent term adjustment under 37 CFR 1.705(b) contesting the 37 CFR 1.702(b) calculation at the time of the mailing of the notice of allowance, applicants are advised that they may wait until the time of the issuance of the patent and file a request for reconsideration of the patent term adjustment pursuant to 37 CFR 1.705(d). As the USPTO does not calculate the amount of time earned pursuant to 37 CFR 1.702(b) until the time of the issuance of the patent, the Office will consider any request for reconsideration of the patent term adjustment due to an error in the calculation of 37 CFR 1.702(b) to be timely if the request for reconsideration is filed within two months of the issuance of the patent. However, as to all other bases for contesting the initial determination of patent term adjustment received with the notice of allowance, applicants must timely file an application for patent term adjustment prior to the payment of the issue fee.[1]

The Office acknowledges submission of the $200.00 fee set forth in 37 CFR 1.18(e) for consideration of the application for patent term adjustment under 37 CFR 1.705(b).

---

[1] For example, if applicants dispute both the calculation of patent term adjustment under 37 CFR 1.702(a)(1) for Office failure to mail a first Office action or notice of allowance not later than fourteen months after the date on which the application was filed, and under 37 CFR 1.702(b) for Office failure to issue a patent within three years of the actual filing date of the application, then applicants must still timely file an application for patent term adjustment prior to the payment of the issue fee to contest the calculation of Office delay in issuing a first Office action or notice of allowance. See 37 CFR 1.705(b) and 35 U.S.C. 154(b)(3)(B). A dispute as to the calculation of the § 1.702(a)(1) period raised on request for reconsideration of patent term adjustment under 37 CFR 1.705(d) will be dismissed as untimely filed.

Any request for reconsideration of the patent term adjustment indicated on the patent must be timely filed within two months after issuance pursuant to 37 CFR 1.705(d) and must include payment of the required fee under 37 CFR 1.18(e).

The Office of Data Management has been advised of this decision. This application is being referred to the Office of Data Management for issuance of the patent.

Telephone inquiries specific to this decision should be directed to the undersigned at (571) 272-3211.

Christina Tartera Donnell

Christina Tartera Donnell
Senior Petitions Attorney
Office of Petitions

UNITED STATES PATENT AND TRADEMARK OFFICE

Commissioner for Patents
United States Patent and Trademark Office
P.O. Box 1450
Alexandria, VA 22313-1450
www.uspto.gov

RONALD V. DAVIDGE
SUITE 514
3300 UNIVERSITY DRIVE
CORAL SPRINGS FL 33065

COPY MAILED
OCT 23 2006
OFFICE OF PETITIONS

In re Application of	:	
Schaefer	:	
Application No. 11/413,837	:	DECISION ON PETITION
Filed: April 28, 2006	:	TO MAKE SPECIAL UNDER
Attorney Docket No. 1423	:	37 CFR 1.102(c)(1)
	:	

This is a decision on the petition under 37 CFR 1.102(c)(1), filed April 28, 2006, to make the above-identified application special based on applicant's age as set forth in M.P.E.P. § 708.02, Section IV.

The petition is **DISMISSED**.

A grantable petition to make an application special under 37 CFR 1.102(c)(1) and MPEP § 708.02, Section IV: Applicant's Age, must be accompanied by evidence showing that at least one of the applicants is 65 years of age, or more, such as a birth certificate or a statement by applicant. No fee is required.

The instant petition does not include a clear copy of applicant's passport. If a clearer copy is unavailable, the attorney can have the applicant send in a signed declaration statement

Further correspondence with respect to this matter should be addressed as follows:

By Mail:
Mail Stop PETITION
Commissioner for Patents
P. O. Box 1450
Alexandria, VA 22313-1450

By hand:
U. S. Patent and Trademark Office
Customer Service Window, Mail Stop Petitions
Randolph Building
401 Dulany Street
Alexandria, VA 22314

By FAX:
(571) 273-8300

Telephone inquiries concerning this decision should be directed to April Wise at 571-272-1642.

All other inquiries concerning either the examination or status of the application should be directed to the Technology Center.

The application is being forwarded to the Technology Center Art Unit 3746 for action in its regular turn.

April M. Wise
Petitions Examiner
Office of Petitions

UNITED STATES PATENT AND TRADEMARK OFFICE

UNITED STATES DEPARTMENT OF COMMERCE
United States Patent and Trademark Office
Address: COMMISSIONER FOR PATENTS
P.O. Box 1450
Alexandria, Virginia 22313-1450
www.uspto.gov

CROWELL & MORING LLP
INTELLECTUAL PROPERTY GROUP
P.O. BOX 14300
WASHINGTON, DC 20044-4300

Mail Date: 06/10/2010

Applicant	: Andreas Gruendel	: DECISION ON REQUEST FOR
Patent Number	: 7629718	: RECALCULATION of PATENT
Issue Date	: 12/08/2009	: TERM ADJUSTMENT IN VIEW
Application No	: 11/413,875	: OF WYETH AND NOTICE OF INTENT TO
Filed	: 04/28/2006	: ISSUE CERTIFICATE OF CORRECTION
		:

The Request for Recalculation is **GRANTED** to the extent indicated.

The patent term adjustment has been determined to be **788** days. The USPTO will *sua sponte* issue a certificate of correction reflecting the amount of PTA days determined by the recalculation.

Prior to the issuance of the certificate of correction, the USPTO will afford patentee an opportunity to be heard and request reconsideration. Accordingly, patentee has **one month or thirty (30) days**, whichever is longer, to file a request for reconsideration of this patent term adjustment calculation. See 35 U.S.C. 154(b)(3)(B)(ii) and 37 CFR 1.322(a)(4). No extensions of time will be granted under 37 CFR 1.136.

Patentee should use document code PET.OP if electronically filing a request for reconsideration of this patent term adjustment calculation. The patentee must also include the information required by 37 CFR 1.705(b)(2) and the fee required by 37 CFR 1.18(e). If patentee does not file a timely request for reconsideration of this patent term adjustment calculation including the information required by 37 CFR 1.705(b)(2) and the fee required by 37 CFR 1.18(e), the USPTO will issue a certificate of correction reflecting the PTA determination noted above.

Patentee should be aware that in order to preserve the right to review in the United States District Court for the District of Columbia of the USPTO patent term adjustment determination, patentee must ensure that he or she also take the steps required under 35 U.S.C. 154(b)(4)(A) in a timely manner. Nothing in the request for recalculation should be construed as providing an alternative time frame for commencing a civil action under 35 U.S.C. 154(b)(4)(A).

Any questions concerning this decision should be directed to the Office of Patent Legal Administration at 571-272-7702.

UNITED STATES PATENT AND TRADEMARK OFFICE

UNITED STATES DEPARTMENT OF COMMERCE
United States Patent and Trademark Office
Address: COMMISSIONER FOR PATENTS
P.O. Box 1450
Alexandria, Virginia 22313-1450
www.uspto.gov

APPLICATION NO.	FILING DATE	FIRST NAMED INVENTOR	ATTORNEY DOCKET NO.	CONFIRMATION NO.
11/413,911	04/28/2006	Indira Poola	E5184-00002	4667

8933 7590 01/25/2008

DUANE MORRIS, LLP
IP DEPARTMENT
30 SOUTH 17TH STREET
PHILADELPHIA, PA 19103-4196

EXAMINER	
GUSSOW, ANNE	

ART UNIT	PAPER NUMBER
1643	

MAIL DATE	DELIVERY MODE
01/25/2008	PAPER

Please find below and/or attached an Office communication concerning this application or proceeding.

The time period for reply, if any, is set in the attached communication.

UNITED STATES PATENT AND TRADEMARK OFFICE

Commissioner for Patents
United States Patent and Trademark Office
P.O. Box 1450
Alexandria, VA 22313-1450
www.uspto.gov

JAN 25 2008

DUANE MORRIS, LLP
IP DEPARTMENT
30 SOUTH 17TH STREET
PHILADELPHIA PA 19103-4196

In re Application of	:
Indira Poola	:
Serial No.: 11/413,911	: PETITION DECISION
Filed: April 28, 2006	:
Attorney Docket No.: E5184-00002	:

This is a decision on the PETITION FOR ACCEPTANCE OF COLOR DRAWINGS UNDER 37 CFR 1.84(a)(2). The petition was filed December 28, 2007. Entry of color drawings requires: 1) three sets of the color drawings, 2) a proper amendment to the specification indicating color photographs or drawings are present in the file, and 3) the required fee of $130.00 under 37 CFR 1.17(h).

A review of the application record indicates that the petition meets all of the requirements for acceptance of color drawings. This is not to be construed that all of the drawings are accepted, only that the color drawings are acceptable.

The petition is **GRANTED**.

Should there be any questions with respect to this decision, please contact Marianne C. Seidel, by mail addressed to: Director, Technology Center 1600, at the address listed above, or by telephone at 571-272-0584or by facsimile transmission at 571-273-8300.

Marianne C. Seidel
Quality Assurance Specialist/Program Manager
Technology Center 1600

UNITED STATES PATENT AND TRADEMARK OFFICE

UNITED STATES DEPARTMENT OF COMMERCE
United States Patent and Trademark Office
Address: COMMISSIONER FOR PATENTS
P.O. Box 1450
Alexandria, Virginia 22313-1450
www.uspto.gov

TRASK BRITT, P.C./ MICRON TECHNOLOGY
P.O. BOX 2550
SALT LAKE CITY, UT 84110

Mail Date: 05/10/2010

Applicant	: Peter A. Benson	: DECISION ON REQUEST FOR
Patent Number	: 7615119	: RECALCULATION of PATENT
Issue Date	: 11/10/2009	: TERM ADJUSTMENT IN VIEW
Application No	: 11/413,921	: OF WYETH AND NOTICE OF INTENT TO
Filed	: 04/27/2006	: ISSUE CERTIFICATE OF CORRECTION
		:

The Request for Recalculation is **GRANTED** to the extent indicated.

The patent term adjustment has been determined to be **488** days. The USPTO will *sua sponte* issue a certificate of correction reflecting the amount of PTA days determined by the recalculation.

Prior to the issuance of the certificate of correction, the USPTO will afford patentee an opportunity to be heard and request reconsideration. Accordingly, patentee has **one month or thirty (30) days**, whichever is longer, to file a request for reconsideration of this patent term adjustment calculation. See 35 U.S.C. 154(b)(3)(B)(ii) and 37 CFR 1.322(a)(4). No extensions of time will be granted under 37 CFR 1.136.

Patentee should use document code PET.OP if electronically filing a request for reconsideration of this patent term adjustment calculation. The patentee must also include the information required by 37 CFR 1.705(b)(2) and the fee required by 37 CFR 1.18(e). If patentee does not file a timely request for reconsideration of this patent term adjustment calculation including the information required by 37 CFR 1.705(b)(2) and the fee required by 37 CFR 1.18(e), the USPTO will issue a certificate of correction reflecting the PTA determination noted above.

Patentee should be aware that in order to preserve the right to review in the United States District Court for the District of Columbia of the USPTO patent term adjustment determination, patentee must ensure that he or she also take the steps required under 35 U.S.C. 154(b)(4)(A) in a timely manner. Nothing in the request for recalculation should be construed as providing an alternative time frame for commencing a civil action under 35 U.S.C. 154(b)(4)(A).

Any questions concerning this decision should be directed to the Office of Patent Legal Administration at 571-272-7702.

UNITED STATES PATENT AND TRADEMARK OFFICE

UNITED STATES DEPARTMENT OF COMMERCE
United States Patent and Trademark Office
Address: COMMISSIONER FOR PATENTS
P.O. Box 1450
Alexandria, Virginia 22313-1450
www.uspto.gov

HAMILTON & TERRILE, LLP
P.O. BOX 203518
AUSTIN, TX 78720

Mail Date: 04/20/2010

Applicant	: Lowell B. Dennis	: DECISION ON REQUEST FOR
Patent Number	: 7577829	: RECALCULATION of PATENT
Issue Date	: 08/18/2009	: TERM ADJUSTMENT IN VIEW
Appliction No	: 11/413,935	: OF WYETH AND NOTICE OF INTENT TO
Filed	: 04/28/2006	: ISSUE CERTIFICATE OF CORRECTION
		:

The Request for Recalculation is **GRANTED** to the extent indicated.

The patent term adjustment has been determined to be **581** days. The USPTO will *sua sponte* issue a certificate of correction reflecting the amount of PTA days determined by the recalculation.

Prior to the issuance of the certificate of correction, the USPTO will afford patentee an opportunity to be heard and request reconsideration. Accordingly, patentee has **one month or thirty (30) days**, whichever is longer, to file a request for reconsideration of this patent term adjustment calculation. See 35 U.S.C. 154(b)(3)(B)(ii) and 37 CFR 1.322(a)(4). No extensions of time will be granted under 37 CFR 1.136.

Patentee should use document code PET.OP if electronically filing a request for reconsideration of this patent term adjustment calculation. The patentee must also include the information required by 37 CFR 1.705(b)(2) and the fee required by 37 CFR 1.18(e). If patentee does not file a timely request for reconsideration of this patent term adjustment calculation including the information required by 37 CFR 1.705(b)(2) and the fee required by 37 CFR 1.18(e), the USPTO will issue a certificate of correction reflecting the PTA determination noted above.

Patentee should be aware that in order to preserve the right to review in the United States District Court for the District of Columbia of the USPTO patent term adjustment determination, patentee must ensure that he or she also take the steps required under 35 U.S.C. 154(b)(4)(A) in a timely manner. Nothing in the request for recalculation should be construed as providing an alternative time frame for commencing a civil action under 35 U.S.C. 154(b)(4)(A).

Any questions concerning this decision should be directed to the Office of Patent Legal Administration at 571-272-7702.

UNITED STATES PATENT AND TRADEMARK OFFICE

Commissioner for Patents
United States Patent and Trademark Office
P.O. Box 1450
Alexandria, VA 22313-1450
www.uspto.gov

Townsend and Townsend and Crew, LLP
Two Embarcadero Center
Eighth Floor
San Francisco, CA 94111-3834

COPY MAILED

SEP 27 2007

OFFICE OF PETITIONS

In re Application of

Guido Robert Frederiks et al.
Application No. 11/413,953
Filed: April 28, 2007
Attorney Docket No. 021245-004110US

DECISION ON PETITION
TO WITHDRAW
FROM RECORD

This is a decision on the Request to Withdraw as attorney or agent of record under 37 C.F.R. § 1.36(b), filed June 4, 2007.

The request is **APPROVED**.

A grantable request to withdraw as attorney/agent of record must be signed by every attorney/agent seeking to withdraw or contain a clear indication that one attorney is signing on behalf of another/others. A request to withdraw will not be approved unless at least 30 (thirty) days would remain between the date of approval and the later of the expiration date of a time to file a response or the expiration date of the maximum time period which can be extended under 37 C.F.R. § 1.136(a).

The request was signed by Philip H. Albert on behalf of all attorneys of record. All attorneys/agents have been withdrawn. Applicant is reminded that there is no attorney of record at this time.

The request to change the correspondence of record is not acceptable as the requested correspondence address is not that of: (1) the first named signing inventor; or (2) an intervening assignee of the entire interest under 37 C.F.R 3.71. All future communications from the Office will be directed to the first named signing inventor at the first copied address below until otherwise properly notified by the applicant.

There is no outstanding Office action at this time.

Telephone inquiries concerning this decision should be directed to Terri Williams at 571-272-2991.

T. Williams

Terri Williams
Petitions Examiner
Office of Petitions

cc: **Guido Robert Frederiks**
16230B Greenwood Lane
Monte Sereno, CA 95030

cc: **Himanshu S. Amin**
Amin, Turocy & Calvin LLP
24th Floor, National City Center
Cleveland, OH 44114

UNITED STATES PATENT AND TRADEMARK OFFICE

UNITED STATES DEPARTMENT OF COMMERCE
United States Patent and Trademark Office
Address: COMMISSIONER FOR PATENTS
P.O. Box 1450
Alexandria, Virginia 22313-1450
www.uspto.gov

APPLICATION NUMBER	FILING OR 371 (c) DATE	FIRST NAMED APPLICANT	ATTY. DOCKET NO./TITLE
11/413,953	04/28/2006	Guido Robert Frederiks	021245-004110US

CONFIRMATION NO. 9413

20350
TOWNSEND AND TOWNSEND AND CREW, LLP
TWO EMBARCADERO CENTER
EIGHTH FLOOR
SAN FRANCISCO, CA 94111-3834

OC000000026029793

Date Mailed: 09/26/2007

NOTICE REGARDING CHANGE OF POWER OF ATTORNEY

This is in response to the Power of Attorney filed 06/04/2007.

- The withdrawal as attorney in this application has been accepted. Future correspondence will be mailed to the new address of record. 37 CFR 1.33.

Jessi Williams

Office of Initial Patent Examination (571) 272-4000, or 1-800-PTO-9199
FORMER ATTORNEY/AGENT COPY

UNITED STATES PATENT AND TRADEMARK OFFICE

UNITED STATES DEPARTMENT OF COMMERCE
United States Patent and Trademark Office
Address: COMMISSIONER FOR PATENTS
P.O. Box 1450
Alexandria, Virginia 22313-1450
www.uspto.gov

TUROCY & WATSON, LLP
127 Public Square
57th Floor, Key Tower
Cleveland, OH 44114

Mail Date: 04/29/2010

Applicant	: Guido Robert Frederiks	: DECISION ON REQUEST FOR
Patent Number	: 7609724	: RECALCULATION of PATENT
Issue Date	: 10/27/2009	: TERM ADJUSTMENT IN VIEW
Application No	: 11/413,953	: OF WYETH AND NOTICE OF INTENT TO
Filed	: 04/28/2006	: ISSUE CERTIFICATE OF CORRECTION
		:

The Request for Recalculation is **GRANTED** to the extent indicated.

The patent term adjustment has been determined to be **697** days. The USPTO will *sua sponte* issue a certificate of correction reflecting the amount of PTA days determined by the recalculation.

Prior to the issuance of the certificate of correction, the USPTO will afford patentee an opportunity to be heard and request reconsideration. Accordingly, patentee has **one month or thirty (30) days**, whichever is longer, to file a request for reconsideration of this patent term adjustment calculation. See 35 U.S.C. 154(b)(3)(B)(ii) and 37 CFR 1.322(a)(4). No extensions of time will be granted under 37 CFR 1.136.

Patentee should use document code PET.OP if electronically filing a request for reconsideration of this patent term adjustment calculation. The patentee must also include the information required by 37 CFR 1.705(b)(2) and the fee required by 37 CFR 1.18(e). If patentee does not file a timely request for reconsideration of this patent term adjustment calculation including the information required by 37 CFR 1.705(b)(2) and the fee required by 37 CFR 1.18(e), the USPTO will issue a certificate of correction reflecting the PTA determination noted above.

Patentee should be aware that in order to preserve the right to review in the United States District Court for the District of Columbia of the USPTO patent term adjustment determination, patentee must ensure that he or she also take the steps required under 35 U.S.C. 154(b)(4)(A) in a timely manner. Nothing in the request for recalculation should be construed as providing an alternative time frame for commencing a civil action under 35 U.S.C. 154(b)(4)(A).

Any questions concerning this decision should be directed to the Office of Patent Legal Administration at 571-272-7702.

UNITED STATES PATENT AND TRADEMARK OFFICE

Commissioner for Patents
United States Patent and Trademark Office
P.O. Box 1450
Alexandria, VA 22313-1450
www.uspto.gov

Tiajoloff & Kelly
Chrysler Building, 37th Floor
405 Lexington Avenue
New York, NY 10174

COPY MAILED

NOV 21 2007

OFFICE OF PETITIONS

In re Application of :

Eduardo Maayan et al. :
Application No. 11/413,962 : DECISION ON PETITION
Filed: April 27, 2006 : TO WITHDRAW
Attorney Docket No. ELG-P-4727US2D : FROM RECORD
:

This is a decision on the Request to Withdraw as attorney or agent of record under 37 C.F.R. § 1.36(b), filed July 6, 2007.

The request is **APPROVED.**

A grantable request to withdraw as attorney/agent of record must be signed by every attorney/agent seeking to withdraw or contain a clear indication that one attorney is signing on behalf of another/others. A request to withdraw will not be approved unless at least 30 (thirty) days would remain between the date of approval and the later of the expiration date of a time to file a response or the expiration date of the maximum time period which can be extended under 37 C.F.R. § 1.136(a).

The request was signed by Andrew L. Tiajoloff on behalf of all attorneys of record. All attorneys/agents have been withdrawn. Applicant is reminded that there is no attorney of record at this time.

The request to change the correspondence of record is not acceptable as the requested correspondence address is not that of: (1) the first named signing inventor; or (2) an intervening assignee of the entire interest under 37 C.F.R 3.71. All future communications from the Office will be directed to the first named signing inventor at the first copied address below until otherwise properly notified by the applicant.

There is no outstanding Office action at this time.

Telephone inquiries concerning this decision should be directed to Terri Williams at 571-272-2991.

T. Williams

Terri Williams
Petitions Examiner
Office of Petitions

cc: **Eduardo Maayan**
11 Nabshon Street
Kfar Saba, 44447
Israel

cc: **Empk & Shiloh, LLP**
116 John Street
Suite 1201
New York, NY 10038

UNITED STATES PATENT AND TRADEMARK OFFICE

UNITED STATES DEPARTMENT OF COMMERCE
United States Patent and Trademark Office
Address: COMMISSIONER FOR PATENTS
P.O. Box 1450
Alexandria, Virginia 22313-1450
www.uspto.gov

APPLICATION NUMBER	FILING OR 371(C) DATE	FIRST NAMED APPLICANT	ATTY. DOCKET NO./TITLE
11/413,962	04/27/2006	Eduardo Maayan	ELG-P-4727US2D

CONFIRMATION NO. 9400

Andrew L. Tiajoloff, Esq.
Tiajoloff & Kelly
Chrysler Building 37th Floor
405 Lexington Avenue
New York, NY 10174

POWER OF ATTORNEY NOTICE

Date Mailed: 11/21/2007

NOTICE REGARDING CHANGE OF POWER OF ATTORNEY

This is in response to the Power of Attorney filed 07/06/2007.

- The withdrawal as attorney in this application has been accepted. Future correspondence will be mailed to the new address of record. 37 CFR 1.33.

/tswilliams/

Office of Initial Patent Examination (571) 272-4000 or 1-800-PTO-9199

UNITED STATES PATENT AND TRADEMARK OFFICE

Commissioner for Patents
United States Patent and Trademark Office
P.O. Box 1450
Alexandria, VA 22313-1450
www.uspto.gov

Edward L. Kelley
DBA Invention Management Associates
5 Utica Street
Lexington MA 02420

COPY MAILED

JUN 30 2008

OFFICE OF PETITIONS

In re Application of :
Olenio :
Application No. 11/414,002 : ON PETITION
Filed: April 28, 2006 :
Attorney Docket No. 0035-PLUNGER :
For: FITTING FOR CLEANING A THROUGH HULL PORT FROM INSIDE A MARINE VESSEL

This is a decision on the petition under 37 CFR 1.137(b), filed March 28, 2008 (certificate of mailing date March 25, 2008), to revive the above-identified application.

The petition under 37 CFR 1.137(b) is **GRANTED**.

This application became abandoned for failure to timely reply to the Notice to File Corrected Application Papers, mailed May 23, 2006, which set a two month shortened statutory period for reply. No extensions of time having been obtained pursuant to 37 CFR 1.136(a) and no reply being received in the Office, this application became abandoned on July 24, 2006. A Notice of Abandonment was mailed on January 26, 2007.

Applicant has submitted a proper reply to the May 23, 2006 Notice in the form of replacement drawings, an acceptable statement of the unintentional nature of the delay in responding to the May 23, 2006 Notice, and the petition fee. Accordingly, the petition under 37 CFR 1.137(b) is granted.

After the mailing of this decision, the file will be returned to the Office of Patent Application Processing for further pre-examination processing.

Telephone inquiries concerning this matter may be directed to the undersigned at (571) 272-3230.

Shirene Willis Brantley

Shirene Willis Brantley
Senior Petitions Attorney
Office of Petitions

UNITED STATES PATENT AND TRADEMARK OFFICE

Commissioner for Patents
United States Patent and Trademark Office
P.O. Box 1450
Alexandria, VA 22313-1450
www.uspto.gov

Edward L. Kelley
DBA Invention Management Associates
5 Utica Street
Lexington MA 02420

MAILED

JUN 29 2010

OFFICE OF PETITIONS

In re Application of :
Robert D. Olenio :
Application No. 11/414,002 : DECISION ON PETITION
Filed: April 28, 2006 :
Attorney Docket No. 0035-PLUNGER :

This is a decision on the petition under the unintentional provisions of 37 CFR 1.137(b), filed May 26, 2010, to revive the above-identified application.

The petition is **GRANTED**.

The application became abandoned for failure to properly reply within the meaning of 37 CFR 1.113 to the final Office action, mailed August 4, 2009, which set a shortened statutory period for reply of three (3) months. A three (3) month extension of time under the provisions of 37 CFR 1.136(a) were obtained. Accordingly, the application became abandoned on February 5, 2010. The Notice of Abandonment was mailed May 5, 2010.

The petition satisfies the requirements of 37 CFR 1.137(b) in that petitioner has supplied (1) the reply in the form of the $5 to complete the extension of time fee (filed April 6, 2010), (2) the petition fee of $810, and (3) a proper statement of unintentional delay.

Telephone inquiries concerning this decision should be directed to Terri Johnson at (571) 272-2991.

This application is being referred to Technology Center AU 3617 for appropriate action by the Examiner in the normal course of business on the reply received.

Terri Johnson
Petitions Examiner
Office of Petitions

UNITED STATES PATENT AND TRADEMARK OFFICE

Commissioner for Patents
United States Patent and Trademark Office
P.O. Box 1450
Alexandria, VA 22313-1450
www.uspto.gov

KIMBERLY-CLARK WORLDWIDE, INC.
Catherine E. Wolf
401 NORTH LAKE STREET
NEENAH WI 54956

10/31/08

In re Application of:
ALLEN, ANSLEY C. et al
Serial No.: 11/414,032
Filed: Apr. 27, 2006
Docket: 22,360
Title: ARRAY OF WETNESS-SENSING ARTICLES

DECISION ON PETITION

This is a decision on the petition filed on Oct. 22, 2008 by which petitioner requests withdrawal of the restriction requirement mailed Apr. 14, 2008, and that non-elected claims 34-36 be rejoined and examined on the merits. Claims 1-33 were elected for prosecution. This petition is being considered pursuant to 37 CFR 1.144 and 37 CFR 1.181, and no fee is required.

The petition is DISMISSED.

Prosecution History:

A review of the record reveals that on Apr. 14, 2008 a restriction requirement was made between two disclosed and claimed related inventions: I) claims 1-33 drawn to the wetness sensing system, classified in class 604, subclass 329; and II). Claims 34-36 drawn to the method for enhancing and method of selling, classified in class 705, subclass various. On May 1, 2008, the applicant filed a response to the restriction requirement and elected Group I invention, claims 1-33 for prosecution on the merits. The applicant provided reasoning as to why the restriction requirement was improper because the examiner did not show any search burden. On Aug. 11, 2008, the examiner made the restriction requirement final with the position that the search burden was already shown and explained in Paragraph 3 of the original restriction requirement mailed Apr. 14, 2008. On Oct. 22, 2008, the petitioner filed the instant petition and argued that the examiner failed to show serious burden of search existed. Therefore, petitioner believes that the examiner has failed to properly establish a "serious burden" that could justify a restriction requirement.

Discussion and Analysis:

The examiner stated that the inventions were distinct because the inventions were related as a product and a process of using in accordance with MPEP 806.05(h)[1]. The restriction requirement is considered proper in that the inventions are distinct for the reasons set forth in the restriction requirement dated Apr. 14, 2008 and each invention would involve a separate classification and a different search. In restriction requirement of April 14, 2008, the examiner stated that the method of selling the product claims of Group II do not have to be used for selling a wetness sensing system comprising signaling devices producing identical signals. The product as claimed in the claims of Group I can be used in a materially different process, such as direct distribution to the hospital ward to help with incontinence problems. The process claims of Group II are not limited to the field of trademark owners. In addition, the examiner indicated that a serious search burden[2] does exist because the text searches for Groups I and II would be different. (See Paragraph 3 at page 3 of the restriction requirement of Apr. 14, 2008.

In the petition, petitioner, in essence, argues that the non-elected Group II invention would not require any burdensome search as evidenced by the fact that the Examiner has already performed the required search and has rejected all of the claims based on that search (see the Office Action mailed September 13, 2007). Therefore, the claimed inventions presumably should cover the same fields of search. This line of argument is not convincing to overcome the restriction requirement. In this case, petitioner failed to acknowledge that an amendment to the claims was filed on Dec. 12, 2007 which may have resulted in the restriction requirement of Apr. 14, 2008. It is also Office policy that the classification of applications is generally based on the most comprehensive claims (M.P.E.P. 903) and the examiners are responsible to develop a search strategy and fields of searches (M.P.E.P. 904.03). In the present application, while some of the search may have performed, petitioner fails to show any evidence that the inventions of Groups I and II would require identical fields of search.

---

[1] **MPEP** 806.05(h) [R-3] Product and Process of Using: A product and a process of using the product can be shown to be distinct inventions if either or both of the following can be shown: (A) the process **of using as claimed can be** practiced with another materially different product; or (B) the product as claimed can be used in a materially different process. The burden is on the examiner to provide an example, but the example need not be **documented.** If the applicant either proves or provides a convincing argument that the alternative use suggested by the examiner cannot be accomplished, the burden is on the examiner to support a viable alternative use or withdraw the requirement.

[2] MPEP 808.02 Establishing Burden, states: Where, as disclosed in the application, the several inventions claimed are related, and such related inventions are not patentably distinct as claimed, restriction under 35 U.S.C. 121 is never proper (MPEP § 806.05). If applicant voluntarily files claims to such related inventions in different applications, double patenting may be held. Where the * inventions as claimed are shown to be independent or distinct under the criteria of MPEP § 806.05(c) - § 806.06, the examiner, in order to establish reasons for insisting upon restriction, must explain why there would be a serious burden on the examiner if restriction is not required. Thus the examiner must show by appropriate explanation one of the following:(A) **Separate classification thereof**: This shows that each invention has attained recognition in the art as a separate subject for inventive effort, and also a separate field of search. Patents need not be cited to show separate classification. (B) **A separate status in the art when they are classifiable together**: Even though they are classified together, each invention can be shown to have formed a separate subject for inventive effort when the examiner can show recognition of separate inventive effort by inventors. Separate status in the art may be shown by citing patents which are evidence of such separate status, and also of a separate field of search. (C) **A different field of search**: Where it is necessary to search for one of the inventions in a manner that is not likely to result in finding art pertinent to the other invention(s) (e.g., searching different classes/subclasses or electronic resources, or employing different search queries, a different field of search is shown), even though the two are classified together. The indicated different field of search must in fact be pertinent to the type of subject matter covered by the claims. Patents need not be cited to show different fields of search. Where, however, the classification is the same and the field of search is the same and there is no clear indication of separate future classification and field of search, no reasons exist for dividing among independent or related inventions.

In view of the record, the restriction requirement rendered on Apr. 14, 2008 is considered proper and stands. The examiner properly followed the guidelines set forth in M.P.E.P. sections 806.05(h) and 808.02. Therefore, the requested relief cannot be granted.

Conclusion

For the foregoing reasons, the relief requested by petitioner will not be granted. The restriction requirement rendered on Apr. 14, 2008 is considered proper. Petitioner's request to have non-elected claims 34-36 be examined in this application is dismissed. The petition is dismissed.

The application is being forwarded to Examiner Treyger of Art Unit 3761 for waiting for the applicant's response to the final Office action mailed on Aug. 11, 2008. Any request for reconsideration of this decision must be submitted within TWO (2) MONTHS from the mail date of this decision, 37 CFR 1.181(f). No extension of time under 37 CFR 1.136(a) is permitted. The reconsideration request should include a cover letter entitled "Renewed Petition under 37 CFR 1.181". Any inquiry regarding this decision should be directed to Henry C. Yuen, Special Programs Examiner, at (571) 272-4856.

Accordingly, the petition is dismissed.

Donald T. Hajec, Director
Technology Center 3700

UNITED STATES PATENT AND TRADEMARK OFFICE

Commissioner for Patents
United States Patent and Trademark Office
P.O. Box 1450
Alexandria, VA 22313-1450
www.uspto.gov

DAVID R. GILDEA
MENLO PATENT AGENCY LLC
435 HERMOSA WAY
MENLO PARK, CA 94025

COPY MAILED

AUG 3 1 2006

OFFICE OF PETITIONS

In re Application of :
Roland Hassun :
Application No. 11/414,034 : DECISION ON PETITION
Filed: April 28, 2006 : TO MAKE SPECIAL UNDER
Attorney Docket No. MSR381 : 37 CFR 1.102(c)(1)
:

This is a decision on the petition under 37 CFR 1.102(c)(1), filed April 28, 2006, to make the above-identified application special based on applicant's age as set forth in M.P.E.P. § 708.02, Section IV.

The petition is **GRANTED**.

A grantable petition to make an application special under 37 CFR 1.102(c)(1) and MPEP § 708.02, Section IV: Applicant's Age must be accompanied by evidence showing that at least one of the applicants is 65 years of age, or more, such as a birth certificate or a statement by applicant. No fee is required

The instant petition includes a statement from Inventor Roland Hassun stating that he is over 65 years of age. Accordingly, the above-identified application has been accorded "special" status.

Telephone inquiries concerning this decision should be directed to Irvin Dingle at 571-272-3210.

All other inquiries concerning either the examination or status of the application should be directed to the Technology Center.

The application is being forwarded to the Technology Center Art Unit 2816 for action on the merits commensurate with this decision.

Irvin Dingle
Petitions Examiner
Office of Petitions

UNITED STATES PATENT AND TRADEMARK OFFICE

UNITED STATES DEPARTMENT OF COMMERCE
United States Patent and Trademark Office
Address: COMMISSIONER FOR PATENTS
P.O. Box 1450
Alexandria, Virginia 22313-1450
www.uspto.gov

COOPER CAMERON CORPORATION
PO BOX 1212
HOUSTON, TX 77251-1212

Mail Date: 04/22/2010

Applicant	: Clint A. Davis	: DECISION ON REQUEST FOR
Patent Number	: 7599469	: RECALCULATION of PATENT
Issue Date	: 10/06/2009	: TERM ADJUSTMENT IN VIEW
Appliction No	: 11/414,037	: OF WYETH
Filed	: 04/28/2006	:
		:

The Patentee's Request for Recalculation is **DISMISSED.**

This Request is deemed ineligible for consideration for one or more of the following reasons:

(A). The patent for which PTA recalculation is requested is either a design or reissue application or is a reexamination proceeding;

(B). The patent for which PTA recalculation is requested resulted from a utility or plant application filed under 35 USC 111(a) before May 29, 2000 and no CPA filed in the application on/after May 29, 2000;

(C). The patent for which PTA recalculation is requested resulted from an international application in which the international filing date was before May 29, 2000 and no CPA filed in the application on/after May 29, 2000;

(D). The patent for which PTA recalculation is requested issued on/after March 2, 2010;

(E). The Request for Recalculation was filed more than 180 days after the grant date of the patent and the request was not filed within two months of a dismissal of a request for reconsideration of the of the patent term under 37 CFR 1.705(d);

(F). The Request for Recalculation is not solely limited to USPTO pre-Wyeth interpretation of 35 U.S.C. 154(b)(2)(A);

or

(G). A civil action was filed pursuant to 35 U.S.C. 154(b)(4)(A)concerning the same patent at issue in this request.

Patentee may file a reply to this decision dismissing the Request for Recalculation. Patentee must file such reply within one month or thirty days, whichever is longer, of the mail date of the decision dismissing the Request for Recalculation. No fee is required if patentee is asserting in the reply that the dismissal for ineligibility is improper.

Patentee should use document code PET.OP if electronically filing a reply to this dismissal. If the USPTO finds that the request was improperly deemed ineligible, the USPTO will mail applicant a recalculation determination.

Patentee should be aware that in order to preserve the right to review in the United States District Court for the District of Columbia of the USPTO patent term adjustment determination, patentee must ensure that he or she also take the steps required under 35 U.S.C. 154(b)(4)(A). Nothing in the request for recalculation should be construed as providing an alternative time frame for commencing a civil action under 35 U.S.C. 154 (b)(4)(A).

Any questions concerning this decision should be directed to the Office of Patent Legal Administration at 571-272-7702.

UNITED STATES PATENT AND TRADEMARK OFFICE

Commissioner for Patents
United States Patent and Trademark Office
P.O. Box 1450
Alexandria, VA 22313-1450
www.uspto.gov

Levine Bagade Han LLP
2483 East Bayshore Road, Suite 100
Palo Alto, CA 94303

COPY MAILED

JAN 10 2007

OFFICE OF PETITIONS

In re Application of	:	
Gary L. Owens et al.	:	
Application No. 11/414,072	:	DECISION ON PETITION
Filed: April 27, 2006	:	TO WITHDRAW
Attorney Docket No. PORTNZ00103	:	FROM RECORD
	:	

This is a decision on the Request to Withdraw as attorney or agent of record under 37 C.F.R. § 1.36(b), filed October 5, 2006.

The request is **NOT APPROVED** as moot.

A review of the file record indicates that the power of attorney to the attorneys and/or agents associated with Customer Number 40518 has been revoked by the assignee of the patent application on January 5, 2007. Accordingly, the request to withdraw under 37 C.F.R. § 1.36(b) is moot.

All future communications from the Office will continue to be directed to the below-listed address until otherwise notified by applicant.

Telephone inquires concerning this decision should be directed to Terri Williams at 571-272-2991.

Terri Williams
Petitions Examiner
Office of Petitions

cc: **Townsend and Townsend and Crew LLP**
Two Embarcadero Center
8th Floor
San Francisco, CA 94111-3834

UNITED STATES PATENT AND TRADEMARK OFFICE

Commissioner for Patents
United States Patent and Trademark Office
P.O. Box 1450
Alexandria, VA 22313-1450
www.uspto.gov

QUARLES & BRADY LLP
RENAISSANCE ONE
TWO NORTH CENTRAL AVENUE
PHOENIX, AZ 85004-2391

COPY MAILED
DEC 21 2006
OFFICE OF PETITIONS

In re Application of :
James R. Ayers Jr. et al :
Application No. 11/414,083 : DECISION ON PETITION
Filed: April 27, 2006 : TO MAKE SPECIAL UNDER
Attorney Docket No. 110803.00002 CON : 37 CFR 1.102(d)
:

This is a decision on the petition under 37 CFR §1.102(d), filed April 27, 2006, to make the above-identified application special based on actual infringement as set forth in M.P.E.P. § 708.02, Section II.

The petition is **GRANTED.**

A grantable petition to make an application special under 37 CFR §1.102(d) and MPEP §708.02, Section II: Infringement, must be accompanied by the required fee pursuant to 37 CFR 1.17(h) and a statement by the applicant, assignee, or attorney/agent registered to practice before the office alleging:

> (A) That there is an infringing device or product actually on the market or method in use;
>
> (B) That a rigid comparison of the alleged infringing device, product, or method with the claims of the application has been made, and that, in his or her opinion, some of the claims are unquestionably infringed; and
>
> (C) That he or she has made or caused to be made a careful and thorough search of the prior art or has a good knowledge of the pertinent prior art.
>
> Applicant must provide one copy of each of the references deemed most closely related to the subject matter encompassed by the claims if said references are not already of record.

The petition complies with all the above stated requirements. Accordingly, the above-identified application has been accorded "special" status.

Telephone inquiries concerning this decision should be directed to Irvin Dingle at 571-272-3210.

All other inquiries concerning either the examination or status of the application should be directed to the Technology Center.

The application is being forwarded to the Technology Center Art Unit 3622 for action on the merits commensurate with this decision.

Denise Pothier
Petitions Examiner
Office of Petitions

UNITED STATES PATENT AND TRADEMARK OFFICE

Commissioner for Patents
United States Patent and Trademark Office
P.O. Box 1450
Alexandria, VA 22313-1450
www.uspto.gov

DAVID R. GILDEA
MENLO PATENT AGENCY LLC
435 HERMOSA WAY
MENLO PARK CA 94025

COPY MAILED

JUN 0 5 2006

OFFICE OF PETITIONS

In re Application of :
Hassun, Roland :
Application No. 11/414,087 : ON PETITION
Filed: April 28, 2006 :
Attorney Docket No. MSR390 :

This is a decision on the petition under 37 CFR 1.102(c)(1), filed April 28, 2006, to make the above-identified application special based on applicant's age as set forth in M.P.E.P. § 708.02, Section IV.

The petition is **GRANTED**.

A grantable petition to make an application special under 37 CFR 1.102(c)(1) and MPEP § 708.02, Section IV: Applicant's Age must be accompanied by evidence showing that at least one of the applicants is 65 years of age, or more, such as a birth certificate or a statement by applicant. No fee is required.

The instant petition includes a statement from the applicant, Roland Hassun. Accordingly, the above-identified application has been accorded "special" status.

Telephone inquiries concerning this decision should be directed to the undersigned at 571-272-3206. All other inquiries concerning either the examination or status of the application should be directed to the Technology Center.

This matter is being referred to the Technology Center Art Unit 2816 for action on the merits commensurate with this decision.

Liana Chase
Petitions Examiner
Office of Petitions

UNITED STATES PATENT AND TRADEMARK OFFICE

COMMISSIONER FOR PATENTS
UNITED STATES PATENT AND TRADEMARK OFFICE
P.O. BOX 1450
ALEXANDRIA, VA 22313-1450
www.uspto.gov

Wilson Sporting Goods Co.
8750 W. Bryn Mawr Ave.
Chicago IL 60631

COPY MAILED

SEP 21 2007

OFFICE OF PETITIONS

In re Application of :
Guenther, et al. : DECISION REFUSING STATUS
Application No. 11/414,098 : UNDER 37 CFR 1.47(a)
Filed: April 28, 2006 :
Atty. Dkt. No.: WD0120 :
For: BAT HANDLE WITH OPTIMAL :
DAMPING :

This decision is in response to the petition under 37 CFR 1.47(b) filed September 6, 2006. This petition is being properly treated under 37 CFR 1.47(a).

The petition under 37 CFR 1.47(a) is **DISMISSED**.

Petitioners are given TWO MONTHS from the mailing date of this decision to reply, correcting the below-noted deficiencies. Any reply should be entitled "Request for Reconsideration of Petition Under 37 CFR 1.47(a)," and should only address the deficiencies noted herein. The reply under 37 CFR 1.47(a) may include an oath or declaration executed by the non-signing inventors. Any extensions of time will be governed by 37 CFR 1.136(a).

The above-identified application was filed April 28, 2006 without an executed oath or declaration. Accordingly, a Notice to File Missing Parts of Nonprovisional Application (Notice) was mailed May 24, 2006. The Notice required, *inter alia*, a surcharge and an executed oath or declaration.

A grantable petition under 37 CFR 1.47(a) requires: (1) proof that the non-signing inventor cannot be reached or refuses to sign the oath or declaration after having been presented with the application papers (specification, claims and drawings); (2) an acceptable oath or declaration in compliance with 35 U.S.C. §§ 115 and 116; (3) the petition fee; and (4) a statement of the last known address of the non-signing inventor.

As to item (2), an acceptable oath or declaration for the patent application in compliance with 37 CFR 1.63 and 1.64 has not been presented. The declaration presented is unacceptable it fails to identity the application by application serial number and filing

date and fails improperly states that the specification is attached to the declaration.

As to item (3), the required petition fee is $200.00. Petitioners submitted $130.00. The remaining $70.00 has been charged to petitioners' deposit account as authorized.

Further correspondence with respect to this matter should be addressed as follows:

By mail:	Mail Stop Petition Commissioner for Patents P.O. Box 1450 Alexandria, VA 22313-1450
By facsimile:	(571) 273-8300
By hand:	U.S. Patent and Trademark Office Customer Service Window Mail Stop Petition Randolph Building 401 Dulaney Street Alexandria, VA 22314

Telephone inquiries related to this decision may be directed to the undersigned at (571) 272-3205.

Alesia M. Brown
Petitions Attorney
Office of Petitions

UNITED STATES PATENT AND TRADEMARK OFFICE

Commissioner for Patents
United States Patent and Trademark Office
P.O. Box 1450
Alexandria, VA 22313-1450
www.uspto.gov

COPY MAILED

DEC 10 2007

OFFICE OF PETITIONS

Wilson Sporting Goods Co.
8750 W. Bryn Mawr Ave.
Chicago IL 60631

In re Application of :
Guenther, et al. : DECISION ON PETITION
Application No. 11/414,098 :
Filed: April 28, 2006 :
Atty. Dkt. No.: WD0120 :
For: BAT HANDLE WITH OPTIMAL :
DAMPING :

This decision is in response to the renewed petition under 37 CFR 1.47(a), filed October 24, 2007.

Petitioners have shown that non-signing inventor Eggiman has refused to execute the declaration for the above-identified application after having been presented with the complete application papers (specification, including claims, drawings, and oath or declaration).

The above-identified application and papers have been reviewed and found in compliance with 37 CFR 1.47(a). This application is hereby accorded Rule 1.47(a) status.

As provided in Rule 1.47(c), this Office will forward notice of this application's filing to the non-signing inventors at the addresses given in the petition. Notice of the filing of this application will also be published in the Official Gazette.

This application is being forwarded to the Office of Patent Application Processing for further processing.

Telephone inquiries regarding this decision should be directed to the undersigned at (571) 272-3205.

Alesia M. Brown
Petitions Attorney
Office of Petitions

UNITED STATES PATENT AND TRADEMARK OFFICE

Commissioner for Patents
United States Patent and Trademark Office
P.O. Box 1450
Alexandria, VA 22313-1450
www.uspto.gov

Michael D. Eggiman
18797 NW Dairy Creek Rd
North Plains, Oregon 97133

COPY MAILED

DEC 10 2007

OFFICE OF PETITIONS

In re Application of :
Guenther, et al. : LETTER
Application No. 11/414,098 :
Filed: April 28, 2006 :
Atty. Dkt. No.: WD0120 :
For: BAT HANDLE WITH OPTIMAL DAMPING :

Dear Sir:

You are named as an inventor in the above-identified United States patent application filed under the provisions of 35 U.S.C. 116 (United States Code) and 37 C.F.R. § 1.47(a), Rules of Practice in Patent Cases. Should a patent be granted on the application you will be designated therein as a joint inventor.

As a named inventor you are entitled to inspect any paper in the file wrapper of the application, order copies of all or any part thereof (at a prepaid cost as per 37 C.F.R. § 1.19) or make your position of record in the application. Alternatively, you may arrange to do any of the preceding through a registered patent attorney or agent presenting written authorization from you. If you care to join the application, counsel of record (see below) would presumably assist you. Joining in the application would entail the filing of an appropriate oath or declaration by you pursuant to 37 C.F.R. § 1.63.

Requests for information regarding your application should be directed to the File Information Unit at (703) 308-2733. Information regarding how to pay for and order a copy of the application, or a specific paper in the application, should be directed to Certification Division at (703) 308-9726 or 1-800-972-6382 (outside the Washington D.C. area).

Alesia M. Brown
Petitions Attorney
Office of Petitions

UNITED STATES PATENT AND TRADEMARK OFFICE

UNITED STATES DEPARTMENT OF COMMERCE
United States Patent and Trademark Office
Address: COMMISSIONER FOR PATENTS
P.O. Box 1450
Alexandria, Virginia 22313-1450
www.uspto.gov

CARR & FERRELL LLP
2200 GENG ROAD
PALO ALTO, CA 94303

Mail Date: 04/21/2010

Applicant	: Victor Shtrom	: DECISION ON REQUEST FOR
Patent Number	: 7652632	: RECALCULATION of PATENT
Issue Date	: 01/26/2010	: TERM ADJUSTMENT IN VIEW
Appliction No	: 11/414,117	: OF WYETH AND NOTICE OF INTENT TO
Filed	: 04/28/2006	: ISSUE CERTIFICATE OF CORRECTION
		:

The Request for Recalculation is **GRANTED** to the extent indicated.

The patent term adjustment has been determined to be **447** days. The USPTO will *sua sponte* issue a certificate of correction reflecting the amount of PTA days determined by the recalculation.

Prior to the issuance of the certificate of correction, the USPTO will afford patentee an opportunity to be heard and request reconsideration. Accordingly, patentee has **one month or thirty (30) days**, whichever is longer, to file a request for reconsideration of this patent term adjustment calculation. See 35 U.S.C. 154(b)(3)(B)(ii) and 37 CFR 1.322(a)(4). No extensions of time will be granted under 37 CFR 1.136.

Patentee should use document code PET.OP if electronically filing a request for reconsideration of this patent term adjustment calculation. The patentee must also include the information required by 37 CFR 1.705(b)(2) and the fee required by 37 CFR 1.18(e). If patentee does not file a timely request for reconsideration of this patent term adjustment calculation including the information required by 37 CFR 1.705(b)(2) and the fee required by 37 CFR 1.18(e), the USPTO will issue a certificate of correction reflecting the PTA determination noted above.

Patentee should be aware that in order to preserve the right to review in the United States District Court for the District of Columbia of the USPTO patent term adjustment determination, patentee must ensure that he or she also take the steps required under 35 U.S.C. 154(b)(4)(A) in a timely manner. Nothing in the request for recalculation should be construed as providing an alternative time frame for commencing a civil action under 35 U.S.C. 154(b)(4)(A).

Any questions concerning this decision should be directed to the Office of Patent Legal Administration at 571-272-7702.

UNITED STATES PATENT AND TRADEMARK OFFICE

UNITED STATES DEPARTMENT OF COMMERCE
United States Patent and Trademark Office
Address: COMMISSIONER FOR PATENTS
P.O. Box 1450
Alexandria, Virginia 22313-1450
www.uspto.gov

IPLM GROUP, P.A.
POST OFFICE BOX 18455
MINNEAPOLIS, MN 55418

Mail Date: 04/21/2010

Applicant	: Carl D. Wahlstrand	: DECISION ON REQUEST FOR
Patent Number	: 7650192	: RECALCULATION of PATENT
Issue Date	: 01/19/2010	: TERM ADJUSTMENT IN VIEW
Appliction No	: 11/414,136	: OF WYETH AND NOTICE OF INTENT TO
Filed	: 04/28/2006	: ISSUE CERTIFICATE OF CORRECTION
		:

The Request for Recalculation is **GRANTED** to the extent indicated.

The patent term adjustment has been determined to be **538** days. The USPTO will *sua sponte* issue a certificate of correction reflecting the amount of PTA days determined by the recalculation.

Prior to the issuance of the certificate of correction, the USPTO will afford patentee an opportunity to be heard and request reconsideration. Accordingly, patentee has **one month or thirty (30) days**, whichever is longer, to file a request for reconsideration of this patent term adjustment calculation. See 35 U.S.C. 154(b)(3)(B)(ii) and 37 CFR 1.322(a)(4). No extensions of time will be granted under 37 CFR 1.136.

Patentee should use document code PET.OP if electronically filing a request for reconsideration of this patent term adjustment calculation. The patentee must also include the information required by 37 CFR 1.705(b)(2) and the fee required by 37 CFR 1.18(e). If patentee does not file a timely request for reconsideration of this patent term adjustment calculation including the information required by 37 CFR 1.705(b)(2) and the fee required by 37 CFR 1.18(e), the USPTO will issue a certificate of correction reflecting the PTA determination noted above.

Patentee should be aware that in order to preserve the right to review in the United States District Court for the District of Columbia of the USPTO patent term adjustment determination, patentee must ensure that he or she also take the steps required under 35 U.S.C. 154(b)(4)(A) in a timely manner. Nothing in the request for recalculation should be construed as providing an alternative time frame for commencing a civil action under 35 U.S.C. 154(b)(4)(A).

Any questions concerning this decision should be directed to the Office of Patent Legal Administration at 571-272-7702.

UNITED STATES PATENT AND TRADEMARK OFFICE

Commissioner for Patents
United States Patent and Trademark Office
P.O. Box 1450
Alexandria, VA 22313-1450
www.uspto.gov

FLEIT, KAIN GIBBONS, GUTMAN, BONGINI & BIANCO
21355 EAST DIXIE HIGHWAY
SUITE 115
MIAMI, FL 33180

COPY MAILED

OCT 27 2008

OFFICE OF PETITIONS

In re Application of :
Gaiben Dror, et al. :
Application No. 11/414,150 : DECISION ON PETITION
Filed: April 28, 2006 : TO WITHDRAW
Attorney Docket No. 7056-X07-003CIP : FROM RECORD
:

This is a decision on the Request to Withdraw as attorney or agent of record under 37 C.F.R. § 1.36(b), filed March 28, 2008 and April 21, 2008.

The request is **DISMISSED** as moot.

A review of the file record indicates that the power of attorney to Fleit, Kain, Gibbons, Gutman, Bongini & Bianco has been revoked by the assignee of the patent application on April 15, 2008. Accordingly, the request to withdraw under 37 C.F.R. § 1.36(b) is moot.

All future communications from the Office will continue to be directed to the below-listed address until otherwise notified by applicant.

Telephone inquires concerning this decision should be directed to undersigned at 571-272- 1642.

April M. Wise
Petitions Examiner
Office of Petitions

cc: JOHN P. WHITE
COOPER & DUNHAM
1185 AVENUE OF THE AMERICAS
NEW YORK, NY 10036

UNITED STATES PATENT AND TRADEMARK OFFICE

UNITED STATES DEPARTMENT OF COMMERCE
United States Patent and Trademark Office
Address: COMMISSIONER FOR PATENTS
P.O. Box 1450
Alexandria, Virginia 22313-1450
www.uspto.gov

APPLICATION NUMBER	FILING OR 371(C) DATE	FIRST NAMED APPLICANT	ATTY. DOCKET NO./TITLE
11/414,150	04/28/2006	Gai Ben Dror	7056-X07-003CIP

CONFIRMATION NO. 9519

23432
COOPER & DUNHAM, LLP
1185 AVENUE OF THE AMERICAS
NEW YORK, NY 10036

POA ACCEPTANCE LETTER

OC00000032780542

Date Mailed: 10/24/2008

NOTICE OF ACCEPTANCE OF POWER OF ATTORNEY

This is in response to the Power of Attorney filed 04/15/2008.

The Power of Attorney in this application is accepted. Correspondence in this application will be mailed to the above address as provided by 37 CFR 1.33.

/dmburns/

Office of Data Management, Application Assistance Unit (571) 272-4000, or (571) 272-4200, or 1-888-786-0101

UNITED STATES PATENT AND TRADEMARK OFFICE

UNITED STATES DEPARTMENT OF COMMERCE
United States Patent and Trademark Office
Address: COMMISSIONER FOR PATENTS
P.O. Box 1450
Alexandria, Virginia 22313-1450
www.uspto.gov

IPLM GROUP, P.A.
POST OFFICE BOX 18455
MINNEAPOLIS, MN 55418

Mail Date: 04/21/2010

Applicant	: Carl D. Wahlstrand	: DECISION ON REQUEST FOR
Patent Number	: 7616995	: RECALCULATION of PATENT
Issue Date	: 11/10/2009	: TERM ADJUSTMENT IN VIEW
Appliction No	: 11/414,156	: OF WYETH AND NOTICE OF INTENT TO
Filed	: 04/28/2006	: ISSUE CERTIFICATE OF CORRECTION
		:

The Request for Recalculation is **GRANTED** to the extent indicated.

The patent term adjustment has been determined to be **488** days. The USPTO will *sua sponte* issue a certificate of correction reflecting the amount of PTA days determined by the recalculation.

Prior to the issuance of the certificate of correction, the USPTO will afford patentee an opportunity to be heard and request reconsideration. Accordingly, patentee has **one month or thirty (30) days**, whichever is longer, to file a request for reconsideration of this patent term adjustment calculation. See 35 U.S.C. 154(b)(3)(B)(ii) and 37 CFR 1.322(a)(4). No extensions of time will be granted under 37 CFR 1.136.

Patentee should use document code PET.OP if electronically filing a request for reconsideration of this patent term adjustment calculation. The patentee must also include the information required by 37 CFR 1.705(b)(2) and the fee required by 37 CFR 1.18(e). If patentee does not file a timely request for reconsideration of this patent term adjustment calculation including the information required by 37 CFR 1.705(b)(2) and the fee required by 37 CFR 1.18(e), the USPTO will issue a certificate of correction reflecting the PTA determination noted above.

Patentee should be aware that in order to preserve the right to review in the United States District Court for the District of Columbia of the USPTO patent term adjustment determination, patentee must ensure that he or she also take the steps required under 35 U.S.C. 154(b)(4)(A) in a timely manner. Nothing in the request for recalculation should be construed as providing an alternative time frame for commencing a civil action under 35 U.S.C. 154(b)(4)(A).

Any questions concerning this decision should be directed to the Office of Patent Legal Administration at 571-272-7702.

UNITED STATES PATENT AND TRADEMARK OFFICE

UNITED STATES DEPARTMENT OF COMMERCE
United States Patent and Trademark Office
Address: COMMISSIONER FOR PATENTS
P.O. Box 1450
Alexandria, Virginia 22313-1450
www.uspto.gov

FERENCE & ASSOCIATES LLC
409 BROAD STREET
PITTSBURGH, PA 15143

Mail Date: 04/21/2010

Applicant	: Arnold S. Weksler	: DECISION ON REQUEST FOR
Patent Number	: 7578691	: RECALCULATION of PATENT
Issue Date	: 08/25/2009	: TERM ADJUSTMENT IN VIEW
Appliction No	: 11/414,162	: OF WYETH AND NOTICE OF INTENT TO
Filed	: 04/29/2006	: ISSUE CERTIFICATE OF CORRECTION
		:

The Request for Recalculation is **GRANTED** to the extent indicated.

The patent term adjustment has been determined to be **0** days. The USPTO will *sua sponte* issue a certificate of correction reflecting the amount of PTA days determined by the recalculation.

Prior to the issuance of the certificate of correction, the USPTO will afford patentee an opportunity to be heard and request reconsideration. Accordingly, patentee has **one month or thirty (30) days**, whichever is longer, to file a request for reconsideration of this patent term adjustment calculation. See 35 U.S.C. 154(b)(3)(B)(ii) and 37 CFR 1.322(a)(4). No extensions of time will be granted under 37 CFR 1.136.

Patentee should use document code PET.OP if electronically filing a request for reconsideration of this patent term adjustment calculation. The patentee must also include the information required by 37 CFR 1.705(b)(2) and the fee required by 37 CFR 1.18(e). If patentee does not file a timely request for reconsideration of this patent term adjustment calculation including the information required by 37 CFR 1.705(b)(2) and the fee required by 37 CFR 1.18(e), the USPTO will issue a certificate of correction reflecting the PTA determination noted above.

Patentee should be aware that in order to preserve the right to review in the United States District Court for the District of Columbia of the USPTO patent term adjustment determination, patentee must ensure that he or she also take the steps required under 35 U.S.C. 154(b)(4)(A) in a timely manner. Nothing in the request for recalculation should be construed as providing an alternative time frame for commencing a civil action under 35 U.S.C. 154(b)(4)(A).

Any questions concerning this decision should be directed to the Office of Patent Legal Administration at 571-272-7702.

SPE RESPONSE FOR CERTIFICATE OF CORRECTION

DATE : 1/5/10 Paper No.: —

TO SPE OF : ART UNIT 3747

SUBJECT : Request for Certificate of Correction for Appl. No.: 11/414167 Patent No.: 7404381 B2

Please respond to this request for a certificate of correction within 7 days.

FOR IFW FILES:

Please review the requested changes/corrections as shown in the **COCIN** document(s) in the IFW application image. No new matter should be introduced, nor should the scope or meaning of the claims be changed.

Please complete the response (see below) and forward the completed response to scanning using document code **COCX**.

FOR PAPER FILES:

Please review the requested changes/corrections as shown in the attached certificate of correction. Please complete this form (see below) and forward it with the file to:

Certificates of Correction Branch (CofC)
Randolph Square – 9D10-A
Palm Location 7580

Virginia Tolbert
Certificates of Correction Branch
571-272-0460

Thank You For Your Assistance

The request for issuing the above-identified correction(s) is hereby:
Note your decision on the appropriate box.

☒	**Approved**	**All** changes apply.
☐	**Approved in Part**	Specify below which changes **do not** apply.
☐	**Denied**	State the reasons for denial below.

Comments: _____

STEPHEN K. CRONIN
SUPERVISORY PATENT EXAMINER

UNITED STATES PATENT AND TRADEMARK OFFICE

Commissioner for Patents
United States Patent and Trademark Office
P.O. Box 1450
Alexandria, VA 22313-1450
www.uspto.gov

FERNANDO MORALES
56 PIZARRO AVE.
RANCHO VIEJO TX 78575

MAILED

MAR 19 2009

OFFICE OF PETITIONS

In re Application of :
FERNANDO MORALES :
Application No. 11/414190 :
Filing or 371(c) Date: 05/01/2006 :
Title of Invention: :
METHOD OF CONFIDENTIAL VOTING :
USING PERSONAL VOTING CODES : ON PETITION

This is a decision on the correspondence filed January 28, 2009, requesting a petition to revive for free, based upon nonreceipt of an Office action. The petition is properly treated under 37 CFR 1.181(a) (no fee).

This Petition is hereby **granted**.

The above-identified application became abandoned for failure to timely and properly reply to the final Office action, mailed June 17, 2008. The Office action set a three (3) month period for reply. No response having been received, the application became abandoned on September `18, 2008. A Notice of Abandonment was mailed January 22, 2009.

With the present petition, Applicant has demonstrated non-receipt of the Office action by a preponderance of the evidence in accordance with the MPEP 711.03(c)[1].

In view of the foregoing, the petition is granted. The holding of abandonment is hereby withdrawn.

No petition fee has been charged and none is due.

The application will be referred to Technology Center Art Unit 2887 for processing of the Request for Continued Examination filed with the present petition, and of the Amendment filed August 6, 2008, in the normal course of business.

[1] A review of Office records reveals that this Office inadvertently entered the correspondence address as 56 Azarro Avenue, instead of 56 Pizarro Avenue. Office records have been corrected.

Telephone inquiries concerning this matter should be directed to the undersigned at (571) 272-3232.

/Derek L. Woods/
Derek L. Woods
Attorney
Office of Petitions

UNITED STATES PATENT AND TRADEMARK OFFICE

Commissioner for Patents
United States Patent and Trademark Office
P.O. Box 1450
Alexandria, VA 22313-1450
www.uspto.gov

PHILLIP LIU
6980, WHITEOAK DR.
RICHMOND, BC V7EAZ-9 CA CANADA

COPY MAILED

OCT 0 1 2008

OFFICE OF PETITIONS

In re Application of :
Sandro et al. :
Application No. 11/414,198 : ON PETITION
Filed: May 1, 2006 :
Attorney Docket No. None :

This is a decision on the petition under the unintentional provisions of 37 CFR 1.137(b), filed August 29, 2008, to revive the above-identified application.

The petition is **DISMISSED** because it is not signed by all of the applicants. In this regard, petitioner's attention is directed to 37 CFR 1.33(b), which states:

Amendments and other papers filed in the application must be signed by:

> (1) A registered patent attorney or patent agent of record appointed in compliance with § 1.32(b);
> (2) A registered patent attorney or patent agent not of record who acts in a representative capacity under the provisions of § 1.34;
> (3) An assignee as provided for under §3.71(b) of this chapter; or
> (4) All of the applicants (§ 1.41(b)) for patent, unless there is an assignee of the entire interest and such assignee has taken action in the application in accordance with § 3.71 of this chapter.

An unsigned amendment (or other paper) or one not properly signed by a person having authority to prosecute the application is not entered. This applies, for instance, where the amendment (or other paper) is signed by only one of two applicants and the one signing has not been given a power of attorney by the other applicant.

Therefore, as the petition is not signed by all the inventors and the record herein fails to disclose that petitioner herein, Montanari Sandro was ever given a power of attorney to act on behalf of inventor Righi Ermanno, or that he is an assignee of the entire interest and has complied with the provisions of 37 CFR 3.73(b)[1], the petition is considered to not contain a proper statement of unintentional delay.

[1] 37 CFR 3.73(b) provides that: (1) when an assignee seeks to take action in a matter before the Office, the assignee must establish its ownership of the property to the satisfaction of the Commissioner; (2) ownership is established by submitting to the Office, in the Office file related to the matter in which action is sought to be taken, documentary evidence of a chain of title from the original owner to the assignee (*e.g.*, copy of an executed assignment submitted for recording) or by specifying (*e.g.*, reel and frame number) where such evidence is recorded in the Office; (3) the submission establishing ownership must be signed by a party authorized to act on behalf of the assignee; and (4) documents submitted to establish ownership may be required to be recorded as a condition to permitting the assignee to take action in a matter pending before the Office. A 37 CFR 3.73(b) statement is enclosed.

A grantable petition under 37 CFR 1.137(b) must be accompanied by: (1) the required reply, unless previously filed; (2) the petition fee as set forth in 37 CFR 1.17(m); (3) a statement that the entire delay in filing the required reply from the due date for the reply until the filing of a grantable petition pursuant to 37 CFR 1.137(b) was unintentional; and (4) any terminal disclaimer (and fee as set forth in 37 CFR 1.20(d)) required by 37 CFR 1.137(d). Where there is a question as to whether either the abandonment or the delay in filing a petition under 37 CFR 1.137 was unintentional, the Director may require additional information. See MPEP 711.03(c)(II)(C) and (D).

This petition lacks item (1) above, as all of the applicants (§ 1.41(b)) for the above identified patent application did not sign the petition therefore, the statement of unintentional delay cannot be accepted.

Any request for reconsideration of this decision must be submitted within TWO (2) MONTHS from the mail date of this decision. Extensions of time under 37 CFR 1.136(a) are permitted. The reconsideration request should include a cover letter entitled "Renewed Petition under 37 CFR 1.137(b)." This is **not** a final agency action within the meaning of 5 U.S.C. § 704.

Further correspondence with respect to this matter should be addressed as follows:

By Mail:
Mail Stop PETITION
Commissioner for Patents
P. O. Box 1450
Alexandria, VA 22313-1450

By hand:
U. S. Patent and Trademark Office
Customer Service Window, Mail Stop Petitions
Randolph Building
401 Dulany Street
Alexandria, VA 22314

The centralized facsimile number is **(571) 273-8300.**

Telephone inquiries concerning this decision should be directed to Alicia Kelley at (571) 272-6059.

/SDB/

Sherry D. Brinkley
Petitions Examiner
Office of Petitions

cc: MONTANARI SANDRO
5F-2, NO. 181. SEC. 2. MEI-TSUN RD.
TAICHUNG CITY, TAIWAN

UNITED STATES PATENT AND TRADEMARK OFFICE

Commissioner for Patents
United States Patent and Trademark Office
P.O. Box 1450
Alexandria, VA 22313-1450
www.uspto.gov

PHILLIP LIU
6980, WHITEOAK DR.
RICHMOND, BC V7EAZ-9 CA CANADA

COPY MAILED

NOV 10 2008

OFFICE OF PETITIONS

In re Application of :
Sandro et al. :
Application No. 11/414,198 : ON PETITION
Filed: May 1, 2006 :
Attorney Docket No. None :

This is a decision on the renewed petition under the unintentional provisions of 37 CFR 1.137(b), filed October 21, 2008 and supplemented on October 22, 2008, to revive the above-identified application.

The petition is **GRANTED**.

The application became abandoned for failure to timely pay the issue and publication fees on or before July 7, 2008, as required by the Notice of Allowance and Fee(s) Due, mailed April 7, 2008, which set a statutory period for reply of three (3) months. Accordingly, the application became abandoned on July 8, 2008. A Notice of Abandonment was mailed July 31, 2008.

The present petition satisfies the requirements of 37 CFR 1.137(b) in that petitioner has supplied (1) the reply in the form of the issue fee of $720 and the publication fee of $300, (2) the petition fee of $770 , and (3) a proper statement of unintentional delay.

The file does not indicate that a proper change of address has been submitted, although the address given on the petition differs from the address of record. If appropriate, a change of address should be filed in accordance with MPEP 601.03. A courtesy copy of this decision is being mailed to the address given on the petition; however, the Office will mail all future correspondence solely to the address of record.

Telephone inquiries concerning this decision should be directed to Alicia Kelley at (571) 272-6059.

This matter is being referred to the Office of Data Management for processing into a patent.

/SDB/

Sherry D. Brinkley
Petitions Examiner
Office of Petitions

cc: MONTANARI SANDRO
FRIGHI ERMANNO
5F-2, NO. 181. SEC. 2. MEI-TSUN RD.
TAICHUNG CITY, TAIWAN

UNITED STATES PATENT AND TRADEMARK OFFICE

UNITED STATES DEPARTMENT OF COMMERCE
United States Patent and Trademark Office
Address: COMMISSIONER FOR PATENTS
P.O. Box 1450
Alexandria, Virginia 22313-1450
www.uspto.gov

BACON & THOMAS
4th Floor
625 Slaters Lane
Alexandria, VA 22314-1176

Mail Date: 06/03/2010

Applicant	: Tai-Her Yang	: DECISION ON REQUEST FOR
Patent Number	: 7626892	: RECALCULATION of PATENT
Issue Date	: 12/01/2009	: TERM ADJUSTMENT IN VIEW
Application No	: 11/414,203	: OF WYETH AND NOTICE OF INTENT TO
Filed	: 05/01/2006	: ISSUE CERTIFICATE OF CORRECTION
		:

The Request for Recalculation is **GRANTED** to the extent indicated.

The patent term adjustment has been determined to be **518** days. The USPTO will *sua sponte* issue a certificate of correction reflecting the amount of PTA days determined by the recalculation.

Prior to the issuance of the certificate of correction, the USPTO will afford patentee an opportunity to be heard and request reconsideration. Accordingly, patentee has **one month or thirty (30) days**, whichever is longer, to file a request for reconsideration of this patent term adjustment calculation. See 35 U.S.C. 154(b)(3)(B)(ii) and 37 CFR 1.322(a)(4). No extensions of time will be granted under 37 CFR 1.136.

Patentee should use document code PET.OP if electronically filing a request for reconsideration of this patent term adjustment calculation. The patentee must also include the information required by 37 CFR 1.705(b)(2) and the fee required by 37 CFR 1.18(e). If patentee does not file a timely request for reconsideration of this patent term adjustment calculation including the information required by 37 CFR 1.705(b)(2) and the fee required by 37 CFR 1.18(e), the USPTO will issue a certificate of correction reflecting the PTA determination noted above.

Patentee should be aware that in order to preserve the right to review in the United States District Court for the District of Columbia of the USPTO patent term adjustment determination, patentee must ensure that he or she also take the steps required under 35 U.S.C. 154(b)(4)(A) in a timely manner. Nothing in the request for recalculation should be construed as providing an alternative time frame for commencing a civil action under 35 U.S.C. 154(b)(4)(A).

Any questions concerning this decision should be directed to the Office of Patent Legal Administration at 571-272-7702.

UNITED STATES PATENT AND TRADEMARK OFFICE

Commissioner for Patents
United States Patent and Trademark Office
P.O. Box 1450
Alexandria, VA 22313-1450
www.uspto.gov

BAKER & HOSTETLER LLP
WASHINGTON SQUARE SUITE 1100
1050 CONNECTICUT AVE NW
WASHINGTON DC 20036-5304

COPY MAILED

JUL 18 2008

In re Application of :
Gao, et al. :
Application No. 11/414,208 : ON PETITION
Filed: May 1, 2006 :
Attorney Docket No. 59587.21762 :

This is a decision on the petition under 37 CFR 1.137(b), filed July 1, 2008, to revive the above-identified application.

The petition under 37 CFR 1.137(b) is **GRANTED**.

The above-identified application became abandoned for failure to timely file a response to the Notice of Non-Compliant Amendment mailed October 23, 2007. This Office action set an extendable period for reply of one month. No extensions of time were obtained. Accordingly, no reply having been received, the application became abandoned on November 24, 2007. A Notice of Abandonment was mailed on June 16, 2008.

With the instant petition, applicants paid the petition fee, made the proper statement of unintentional delay, and submitted the required reply in the form of an Amendment.

The matter is being forwarded to Group Art Unit 3723 for consideration of the Amendment filed July 1, 2008.

Telephone inquiries concerning this decision should be directed to the undersigned at (571)272-3207.

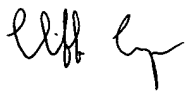

Cliff Congo
Petitions Attorney
Office of Petitions

UNITED STATES PATENT AND TRADEMARK OFFICE

UNITED STATES DEPARTMENT OF COMMERCE
United States Patent and Trademark Office
Address: COMMISSIONER FOR PATENTS
P.O. Box 1450
Alexandria, Virginia 22313-1450
www.uspto.gov

OLIFF & BERRIDGE, PLC
P.O. BOX 320850
ALEXANDRIA, VA 22320-4850

Mail Date: 04/20/2010

Applicant	: Masanori Umeya	: DECISION ON REQUEST FOR
Patent Number	: 7583341	: RECALCULATION of PATENT
Issue Date	: 09/01/2009	: TERM ADJUSTMENT IN VIEW
Appliction No	: 11/414,264	: OF WYETH AND NOTICE OF INTENT TO
Filed	: 05/01/2006	: ISSUE CERTIFICATE OF CORRECTION
		:

The Request for Recalculation is **GRANTED** to the extent indicated.

The patent term adjustment has been determined to be **552** days. The USPTO will *sua sponte* issue a certificate of correction reflecting the amount of PTA days determined by the recalculation.

Prior to the issuance of the certificate of correction, the USPTO will afford patentee an opportunity to be heard and request reconsideration. Accordingly, patentee has **one month or thirty (30) days**, whichever is longer, to file a request for reconsideration of this patent term adjustment calculation. See 35 U.S.C. 154(b)(3)(B)(ii) and 37 CFR 1.322(a)(4). No extensions of time will be granted under 37 CFR 1.136.

Patentee should use document code PET.OP if electronically filing a request for reconsideration of this patent term adjustment calculation. The patentee must also include the information required by 37 CFR 1.705(b)(2) and the fee required by 37 CFR 1.18(e). If patentee does not file a timely request for reconsideration of this patent term adjustment calculation including the information required by 37 CFR 1.705(b)(2) and the fee required by 37 CFR 1.18(e), the USPTO will issue a certificate of correction reflecting the PTA determination noted above.

Patentee should be aware that in order to preserve the right to review in the United States District Court for the District of Columbia of the USPTO patent term adjustment determination, patentee must ensure that he or she also take the steps required under 35 U.S.C. 154(b)(4)(A) in a timely manner. Nothing in the request for recalculation should be construed as providing an alternative time frame for commencing a civil action under 35 U.S.C. 154(b)(4)(A).

Any questions concerning this decision should be directed to the Office of Patent Legal Administration at 571-272-7702.

UNITED STATES PATENT AND TRADEMARK OFFICE

Commissioner for Patents
United States Patent and Trademark Office
P.O. Box 1450
Alexandria, VA 22313-1450
www.uspto.gov

MAILED

JAN 14 2010

OFFICE OF PETITIONS

GEARHART LAW, LLC
4 FERNDALE ROAD
CHATHAM NJ 07928

In re Application of :
Robert D. CASTAGNO et al. :
Application No. 11/414,285 : DECISION ON PETITION
Filed: April 28, 2006 :
Attorney Docket No. **1626 TC 02 CIP** :

This is a decision on the petition under the unintentional provisions of 37 CFR 1.137(b), filed August 06, 2009, to revive the above-identified application.

The petition is **GRANTED**.

The application became abandoned for failure to reply in a timely manner to the Notice of Non-Compliant Amendment mailed, August 29, 2008, which set a shortened statutory period for reply of one (1) month. No extensions of time under the provisions of 37 CFR 1.136(a) were obtained. Accordingly, the application became abandoned on September 30, 2008.

The petition satisfies the requirements of 37 CFR 1.137(b) in that petitioner has supplied (1) the reply in the form of an amendment, (2) the petition fee of $810, and (3) a proper statement of unintentional delay. Accordingly, the reply to the Notice of Non-Compliant Amendment August 24, 2008 is accepted as having been unintentionally delayed.

The terminal disclaimer filed August 06, 2009 is unnecessary and has not been considered on its merits.

Telephone inquiries concerning this decision should be directed to Tredelle Jackson at (571) 272-2783.

This application is being referred to Technology Center AU 3732 for appropriate action on the concurrently filed amendment.

Ramesh Krishnamurthy
Petitions Examiner
Office of Petitions

UNITED STATES PATENT AND TRADEMARK OFFICE

UNITED STATES DEPARTMENT OF COMMERCE
United States Patent and Trademark Office
Address: COMMISSIONER FOR PATENTS
P.O. Box 1450
Alexandria, Virginia 22313-1450
www.uspto.gov

APPLICATION NO.	FILING DATE	FIRST NAMED INVENTOR	ATTORNEY DOCKET NO.	CONFIRMATION NO.
11/414,310	05/01/2006	Neil Fanning	290633US2CRL	1924

7590 01/21/2009

OBLON, SPIVAK, MCCLELLAND MAIER & NEUSTADT, P.C.
1940 DUKE STREET
ALEXANDRIA, VA 22314

EXAMINER	
CHOW, CHARLES CHIANG	

ART UNIT	PAPER NUMBER
2618	

NOTIFICATION DATE	DELIVERY MODE
01/21/2009	ELECTRONIC

DECISION GRANTING PETITION UNDER 37 CFR 1.138(d)

The declaration of express abandonment is recognized

This is in response to the petition under 37 CFR 1.138(d), requesting for a refund of any previously paid search fee and excess claims fee in the above-identified application.

The petition is granted.

The express abandonment is recognized. Any previously paid search fee and excess claims fee are hereby refunded.

Telephone inquiries should be directed to the Office of Data Management at (571) 272-4200.

Betty Powell

Patent Publication Branch
Office of Data Management

Adjustment date: 01/21/2009 BPOWELL
05/03/2006 EHAILE1 00000030 11414310
02 FC:1111 -500.00 OP
04 FC:1201 -600.00 OP

Adjustment date: 01/21/2009 BPOWELL
05/03/2006 EHAILE1 00000030 11414310
02 FC:1111 -500.00 OP
04 FC:1201 -600.00 OP

UNITED STATES PATENT AND TRADEMARK OFFICE

Commissioner for Patents
United States Patent and Trademark Office
P.O. Box 1450
Alexandria, VA 22313-1450
www.uspto.gov

C. JAMES BUSHMAN
5718 WESTHEIMER
SUITE 1800
HOUSTON TX 77057

COPY MAILED

JAN 0 3 2007

OFFICE OF PETITIONS

In re Application of :
Beard, et al. :
Application No. 11/414,315 : ON PETITION
Filed: April 28, 2006 :
Attorney Docket No. RTI-18 :
For: MARINE RISER ASSEMBLY

This decision is in response to the petition under 37 CFR 1.47(a), filed November 27, 2006 (certificate of mailing date November 20, 2006).

The petition is **GRANTED.**

Petitioners have shown that the non-signing inventor, Michael E. Beard, has expressly refused to join in the filing of the above-identified application after having been presented with the application papers. Specifically, the declaration by Patrick Boster, President of RTI Energy Systems, Inc., Mr. Beard's former employer, explains that Mr. Beard received a copy of the application, declaration, and assignment on or about November 3, 2006. Mr. Beard orally refused to sign the declaration. Petitioners have submitted a declaration in compliance with 37 CFR 1.63 and 1.64.

This application and papers have been reviewed and found in compliance with 37 CFR 1.47(a). This application is hereby accorded Rule 1.47(a) status.

As provided in Rule 1.47(c), this Office will forward notice of this application's filing to the non-signing inventor at the address given in the petition. Notice of the filing of this application will also be published in the Official Gazette.

After the mailing of this decision, the application will be forwarded to Technology Center Art Unit 3725 for examination in due course.

Telephone inquiries regarding this decision should be directed to the undersigned at (571) 272-3230.

Shirene Willis Brantley
Senior Petitions Attorney
Office of Petitions

UNITED STATES PATENT AND TRADEMARK OFFICE

Commissioner for Patents
United States Patent and Trademark Office
P.O. Box 1450
Alexandria, VA 22313-1450
www.uspto.gov

MICHAEL E. BEARD
6043 SPRING CREEK LANE
SPRING, TX 77379

COPY MAILED

JAN 0 3 2007

OFFICE OF PETITIONS

In re Application of :
Beard, et al. :
Application No. 11/414,315 : LETTER
Filed: April 28, 2006 :
Attorney Docket No. RTI-18 :
For: MARINE RISER ASSEMBLY

Dear Mr. Beard:

You are named as a joint inventor in the above identified United States patent application, filed under the provisions of 35 U.S.C. 116 (United States Code), and 37 CFR 1.47(a), Rules of Practice in Patent Cases. Should a patent be granted on the application you will be designated therein as a joint inventor.

As a named inventor you are entitled to inspect any paper in the file wrapper of the application, order copies of all or any part thereof (at a prepaid cost per 37 CFR 1.19) or make your position of record in the application. Alternatively, you may arrange to do any of the preceding through a registered patent attorney or agent presenting written authorization from you. If you care to join the application, counsel of record (see below) would presumably assist you. Joining in the application would entail the filing of an appropriate oath or declaration by you pursuant to 37 CFR 1.63.

Requests for information regarding your application should be directed to the File Information Unit at (703)308-2733. Information regarding how to pay for and order a copy of the application, or a specific paper in the application, should be directed to Certification Division at (703)308-9726 or 1(800)972-6382 (outside the Washington D.C. area).

Telephone inquiries regarding this communication should be directed to the undersigned at (571) 272-3230.

Shirene Willis Brantley

Shirene Willis Brantley
Senior Petitions Attorney
Office of Petitions

ATTORNEY OF RECORD: C. JAMES BUSHMAN
5718 WESTHEIMER
SUITE 1800
HOUSTON TX 77057

UNITED STATES PATENT AND TRADEMARK OFFICE

Commissioner for Patents
United States Patent and Trademark Office
P.O. Box 1450
Alexandria, VA 22313-1450
www.uspto.gov

Paper No.

COPY MAILED

SEP 30 2008

SEAN KAUFHOLD
P. O. BOX 89626
SIOUX FALLS SD 57109

In re Application of
Willie E. Harrison, Jr.
Application No. 11/414,321
Filed: May 1, 2006
Attorney Docket No. DET4191
Title: TOILET SEAT GRIPPING APPARATUS

DECISION ON PETITION PURSUANT TO 37 C.F.R. § 1.137(B)

This is a decision on the petition filed July 10, 2008, pursuant to 37 C.F.R. § 1.137(b), to revive the above-identified application.

This petition is **GRANTED.**

The above-identified application became abandoned for failure to submit the issue fee in a timely manner in reply to the Notice of Allowance and Issue Fee Due, mailed March 20, 2008, which set a shortened statutory period for reply of three months. No extensions of time are permitted for transmitting issue or publication fees.[1] Accordingly, the above-identified application became abandoned on June 21, 2008. A Notice of Abandonment was mailed on July 18, 2008, subsequent to the filing of this petition.

A grantable petition pursuant to 37 C.F.R. § 1.137(b) must be accompanied by:

(1) The reply required to the outstanding Office action or notice, unless previously filed;
(2) The petition fee as set forth in 37 C.F.R. § 1.17(m);
(3) A statement that the entire delay in filing the

1 See MPEP § 710.02(e).

required reply from the due date for the reply until the filing of a grantable petition pursuant to this paragraph was unintentional. The Commissioner may require additional information where there is a question whether the delay was unintentional, and;

(4) Any terminal disclaimer (and fee as set forth in 37 C.F.R. § 1.20(d)) required pursuant to paragraph (d) of this section.

With this petition, Petitioner has included the petition and issue fees, along with the proper statement of unintentional delay.

The first three requirements of Rule 1.137(b) have been met. The fourth requirement of Rule 1.137(b) is not applicable, as a terminal disclaimer is not required.

Pursuant to this decision, the Office of Patent Publication will be notified of this decision so that the present application can be processed into a patent.

Petitioner may find it beneficial to view Private PAIR within a fortnight of the present decision to ensure that the revival has been acknowledged by the Office of Patent Publication in response to this decision. It is noted that all inquiries with regard to any failure of that change in status should be directed to the Office of Patent Publication where that change of status must be effected - **the Office of Petitions cannot effectuate a change of status.**

Telephone inquiries regarding *this decision* should be directed to the undersigned at (571) 272-3225.[2] All other inquiries concerning the status of the application should be directed to the Office of Patent Publication at 571-272-4200.

/Paul Shanoski/
Paul Shanoski
Senior Attorney
Office of Petitions

---

2 Petitioner will note that all practice before the Office should be in writing, and the action of the Office will be based exclusively on the written record in the Office. See 37 C.F.R. § 1.2. As such, Petitioner is reminded that no telephone discussion may be controlling or considered authority for any further action(s) of Petitioner.

UNITED STATES PATENT AND TRADEMARK OFFICE

Commissioner for Patents
United States Patent and Trademark Office
P.O. Box 1450
Alexandria, VA 22313-1450
www.uspto.gov

MCANDREWS HELD & MALLOY, LTD
500 WEST MADISON STREET
SUITE 3400
CHICAGO IL 60661

10/15/08

In re Application of:
REUSCHE, THOMAS K. et al
Serial No.: 11/414,327
Filed: Apr. 28, 2006
Docket: 17488US01
Title: DEICING SYSTEMS

DECISION ON PETITION TO WITHDRAW FINALITY OF THE FINAL OFFICE ACTION

This is a decision on the petition filed on Oct. 8, 2008 to withdraw the finality of the Office action of Jul. 24, 2008.

The petition is granted.

The examiner issued a non-final Office action on Apr. 30, 2008 rejecting all elected claims in the application. In response to the office action, on May 15, 2008 the applicant filed an amendment canceling claim 14 and amending claim 1 substantively. On Jul. 24, 2008, the examiner issued a final Office action. On Aug. 6, 2008, the applicant filed a response to the final rejection of Jul. 24, 2008 with additional new method claim 21 and traversal of the rejection. On Sep. 5, 2008, the examiner issued an advisory action informing the applicant that the additional new claim 21 raises new issue and requires further consideration. On Sep. 17, 2008, the applicant filed a request for reconsideration and argued the propriety of the final rejection. On Oct 2, 2008, the examiner issued another advisory action and refused to enter the amendment filed Aug. 6, 2008. On Oct. 8, 2008, the current petition to withdraw the finality of the final Office action of Jul. 24, 2008 was filed.

It is noted that the record does show that in the amendment filed on May 15, 2008, the applicant did not amend claim 17. There were no changes in scope of at least claim 17. Therefore, the rejection of at least claim 17 under 35 U.S.C. 103(a) as being unpatentable over Ward (US4599973) in view of Bradford (US5496989) and VonArx et al. (US6539171) was not necessitated by the amendment filed on May 15, 2008. As such, the finality of the Office action issued on Jul. 24, 2008 is premature and thus the finality of the action is hereby withdrawn. Since the finality is being withdrawn, the amendment filed on Aug. 6, 2008 in response to the Office action dated Jul. 24, 2008 has been treated as a 37 CFR § 1.111 amendment. The requested relief is granted.

The application is being forwarded to Supervisory Patent Examiner of Art Unit 3742 for consideration of the amendment filed on Aug. 6, 2008. Any inquiry regarding this decision should be directed to Henry C. Yuen, Special Programs Examiner, at (571) 272-4856.

PETITION GRANTED.

for

Karen M. Young, Director
Technology Center 3700

UNITED STATES PATENT AND TRADEMARK OFFICE

UNITED STATES DEPARTMENT OF COMMERCE
United States Patent and Trademark Office
Address: COMMISSIONER FOR PATENTS
P.O. Box 1450
Alexandria, Virginia 22313-1450
www.uspto.gov

APPLICATION NO.	FILING DATE	FIRST NAMED INVENTOR	ATTORNEY DOCKET NO.	CONFIRMATION NO.
11/414,327	04/28/2006	Thomas K. Reusche	17488US01	1858

23446 7590 03/09/2010

MCANDREWS HELD & MALLOY, LTD
500 WEST MADISON STREET
SUITE 3400
CHICAGO, IL 60661

EXAMINER	
PATEL, VINOD D	
ART UNIT	PAPER NUMBER
3742	

MAIL DATE	DELIVERY MODE
03/09/2010	PAPER

Please find below and/or attached an Office communication concerning this application or proceeding.

The time period for reply, if any, is set in the attached communication.

UNITED STATES PATENT AND TRADEMARK OFFICE

Commissioner for Patents
United States Patent and Trademark Office
P.O. Box 1450
Alexandria, VA 22313-1450
www.uspto.gov

MCANDREWS HELD & MALLOY, LTD
500 WEST MADISON STREET
SUITE 3400
CHICAGO IL 60661

In re Application of:
REUSCHE, THOMAS K. et al
Serial No. 11/414,327
Filed: April 28, 2006
Docket: 17488US01
Title: DEICING SYSTEMS

DECISION ON PETITION
UNDER 37 CFR § 1.144

This is a decision on the petition filed August 13, 2009 under 37 CFR 1.181 requesting withdrawal of the restriction requirement of October 28, 2008. This petition is being considered pursuant to 37 CFR § 1.144 and 37 CFR § 1.181, and no fee is required.

The petition is **dismissed as moot.**

The records shows that in the Office Action of October 28, 2008, the examiner stated that the newly added independent claim 21 was directed to an independent or distinct invention from the invention originally claimed. New claim 21 was directed to a method of heating water by automatically controlling the heating element which is not required for apparatus claim. Water can be heated without using automatic control such as manual switch controlling the heating element. In response, in the Rule 116 amendment of December 22, 2009, the applicant amended the claim 21 by deleting the limitation regarding "automatically controlling" and continued traversing of the constructive election given on October 28, 2008. The constructive election was made final in the non-final Office action mailed on May 13, 2009 after entry of March 4, 2009 RCE. On August 13, 2009, the current petition was filed.

In the petition, petitioner argues that the examiner failed to provide sufficient explanation of the restriction as to why the inventions are distinct or independent. The examiner did not identify the separate classification or a different field of search. The examiner failed to explain any serious search burden if restriction is not required. Petitioner opines that the method limitations in the broadened claim 21 are analogous to various limitations found in claim 1. Therefore, petitioner believes that since the examiner has already searched and examined the various limitations in claim 1, there can not be a serious search burden on the examiner for examining subject matter of new claim 21. Petitioner concludes that the restriction requirement of October 28, 2008 should be withdrawn because new claim 21 as amended in the amendment of December 22, 2008 does not impose a burden on the Office.

A review of the records shows the applicant has amended the non-elected independent claim 21 and also amended at least the elected independent claim 1 in December 22, 2008 amendment. With the amendments to the claims, the restriction requirement based on constructive election of December 22, 2008 is no longer applicable. However, the review of the restriction requirement October 28, 2008 also shows that the examiner did not provide a clear explanation why the claimed inventions are independent or distinct with specific examples as required by MPEP §802.01. The examiner also failed to address the issue of serious search burden as argued by the applicant in the amendment of December 22, 2008. Therefore, the restriction requirement promulgated on October 28, 2008 does not comply with MPEP § 802.01.

In view of the amendments to the elected claim 1 and non-elected claim 21, the restriction requirement of October 28, 2008 is no longer applicable. The requested relief can not be granted. In view of the noted deficiency of the restriction requirement of October 28, 2008, the restriction requirement is hereby withdrawn. The examiner is directed to either 1). withdraw the restriction based on constructive election of October 28, 2008 and examine all claims 1-6 and 17-19 and 21 or 2). provide a complete restriction requirement setting forth reasons and examples of distinctness of each invention in accordance with MPEP § 802.01 and § 808.02.

The application is being forwarded to the examiner via the Supervisory Patent Examiner of Art Unit 3742 for preparation of an Office action in response to the applicant's amendment filed on August 13, 2009 consistent with this decision. Any request for reconsideration of this decision must be submitted within TWO (2) MONTHS from the mail date of this decision, 37 CFR 1.181(f). No extension of time under 37 CFR 1.136(a) is permitted. The reconsideration request should include a cover letter entitled "Renewed Petition under 37 CFR 1.181". Any inquiry regarding this decision should be directed to Henry C. Yuen, Special Programs Examiner, at (571) 272-4856.

PETITION DISMISSED AS MOOT.

Donald T. Hajec, Director
Technology Center 3700

UNITED STATES PATENT AND TRADEMARK OFFICE

Commissioner for Patents
United States Patent and Trademark Office
P.O. Box 1450
Alexandria, VA 22313-1450
www.uspto.gov

JAGTIANI + GUTTAG
10363-A DEMOCRACY LANE
FAIRFAX VA 22030

MAILED

FEB 13 2009

OFFICE OF PETITIONS

In re Application of
BALABAN, Naomi
Application No. 11/414,350
Filed: May 01, 2006
Attorney Docket No. **CENT-0007-CP3**

DECISION ON PETITION
TO WITHDRAW
FROM RECORD

This is a decision on the Request to Withdraw as attorney or agent of record under 37 C.F.R. § 1.36(b), filed November 19, 2008.

The request is **APPROVED**.

A grantable request to withdraw as attorney/agent of record must be signed by every attorney/agent seeking to withdraw or contain a clear indication that one attorney is signing on behalf of another/others. The Office requires the practitioner(s) requesting withdrawal to certify that he, she, or they have: (1) given reasonable notice to the client, prior to the expiration of the response period, that the practitioner(s) intends to withdraw from employment; (2) delivered to the client or a duly authorized representative of the client all papers and property (including funds) to which the client is entitled; and (3) notified the client of any responses that may be due and the time frame within which the client must respond, pursuant 37 CFR 10.40(c).

The request was signed by Steven B. Kelber on behalf of all attorneys of record. Steven B. Kelber has been withdrawn as attorney or agent of record; all other attorneys remain of record.

The correspondence address of record remains unchanged.

There is no outstanding office action at this time.

Telephone inquiries concerning this decision should be directed to Michelle R. Eason at 571-272-4231.

Michelle R. Eason
Paralegal Specialist
Office of Petitions

UNITED STATES PATENT AND TRADEMARK OFFICE

UNITED STATES DEPARTMENT OF COMMERCE
United States Patent and Trademark Office
Address: COMMISSIONER FOR PATENTS
P.O. Box 1450
Alexandria, Virginia 22313-1450
www.uspto.gov

APPLICATION NO.	FILING DATE	FIRST NAMED INVENTOR	ATTORNEY DOCKET NO.	CONFIRMATION NO.
11/414,377	05/01/2006	John Haines Russell	290544US2CRL	1797

7590 03/21/2008

OBLON, SPIVAK, MCCLELLAND MAIER & NEUSTADT, P.C.
1940 DUKE STREET
ALEXANDRIA, VA 22314

EXAMINER	
TROST IV, WILLIAM GEORGE	

ART UNIT	PAPER NUMBER
2617	

NOTIFICATION DATE	DELIVERY MODE
03/21/2008	ELECTRONIC

DECISION GRANTING PETITION UNDER 37 CFR 1.138(d)

The declaration of express abandonment is recognized

This is in response to the petition under 37 CFR 1.138(d), requesting for a refund of any previously paid search fee and excess claims fee in the above-identified application.

The petition is granted.

The express abandonment is recognized. Any previously paid search fee and excess claims fee are hereby refunded.

Telephone inquiries should be directed to the Office of Data Management at (571) 272-4200.

Nimi Farmer

Patent Publication Branch
Office of Data Management

Adjustment date: 03/21/2008 KKING1
05/03/2006 DTESSEM1 00000041 11414377
02 FC:1111 -500.00 OP

Refund Ref:
03/21/2008 0030052483

Credit Card Refund Total: $500.00

Am Exp..: XXXXXXXXXXX1002

UNITED STATES PATENT AND TRADEMARK OFFICE

Commissioner for Patents
United States Patent and Trademark Office
P.O. Box 1450
Alexandria, VA 22313-1450
www.uspto.gov

COPY MAILED

APR 30 2009

OFFICE OF PETITIONS

SCHWABE, WILLIAMSON & WYATT, PC
PACWEST CENTER, SUITE 1900
1211 SW FIFTH AVENUE
PORTLAND, OR 97204

In re Application of
David H. J. Glassco, et al.
Application No. 11/414,396
Filed: April 28, 2006
Attorney Docket No. 113335-147899

DECISION ON PETITION
TO WITHDRAW
FROM RECORD

This is a decision on the Request to Withdraw as attorney or agent of record under 37 C.F.R. § 1.36(b), filed March 24, 2009.

The request is **APPROVED**.

A grantable request to withdraw as attorney/agent of record must be signed by every attorney/agent seeking to withdraw or contain a clear indication that one attorney is signing on behalf of another/others.

The request was signed by Al AuYeung behalf of all attorneys of record who are associated with customer No. 25943. All attorneys/agents associated with the Customer Number 25943 have been withdrawn. Applicant is reminded that there is no attorney of record at this time.

The correspondence address of record has been changed and the new correspondence address is the address indicated below.

There is an outstanding Office action mailed February 4, 2009 that requires a reply from applicant.

Telephone inquiries concerning this decision should be directed to undersigned at 571-272-1642.

/AMW/
April M. Wise
Petitions Examiner
Office of Petitions

cc: DAVID H. J. GLASSCO
16068 80A AVENUE
SURREY BC V3S 8H8
CANADA

UNITED STATES PATENT AND TRADEMARK OFFICE

UNITED STATES DEPARTMENT OF COMMERCE
United States Patent and Trademark Office
Address: COMMISSIONER FOR PATENTS
P.O. Box 1450
Alexandria, Virginia 22313-1450
www.uspto.gov

APPLICATION NUMBER	FILING OR 371(C) DATE	FIRST NAMED APPLICANT	ATTY. DOCKET NO./TITLE
11/414,396	04/28/2006	David H. J. Glassco	113335-147899

CONFIRMATION NO. 2742

POWER OF ATTORNEY NOTICE

25943
SCHWABE, WILLIAMSON & WYATT, P.C.
PACWEST CENTER, SUITE 1900
1211 SW FIFTH AVENUE
PORTLAND, OR 97204

Date Mailed: 04/27/2009

NOTICE REGARDING CHANGE OF POWER OF ATTORNEY

This is in response to the Power of Attorney filed 03/24/2009.

- The withdrawal as attorney in this application has been accepted. Future correspondence will be mailed to the new address of record. 37 CFR 1.33.

/amwise/

Office of Data Management, Application Assistance Unit (571) 272-4000, or (571) 272-4200, or 1-888-786-0101

UNITED STATES PATENT AND TRADEMARK OFFICE

UNITED STATES DEPARTMENT OF COMMERCE
United States Patent and Trademark Office
Address: COMMISSIONER FOR PATENTS
P.O. Box 1450
Alexandria, Virginia 22313-1450
www.uspto.gov

YAHOO! INC.
C/O Ostrow Kaufman & Frankl LLP
The Chrysler Building
405 Lexington Avenue, 62nd Floor
NEW YORK, NY 10174

Mail Date: 04/20/2010

Applicant	: Gordon Sun	: DECISION ON REQUEST FOR
Patent Number	: 7647314	: RECALCULATION of PATENT
Issue Date	: 01/12/2010	: TERM ADJUSTMENT IN VIEW
Appliction No	: 11/414,405	: OF WYETH AND NOTICE OF INTENT TO
Filed	: 04/28/2006	: ISSUE CERTIFICATE OF CORRECTION
		:

The Request for Recalculation is **GRANTED** to the extent indicated.

The patent term adjustment has been determined to be **261** days. The USPTO will *sua sponte* issue a certificate of correction reflecting the amount of PTA days determined by the recalculation.

Prior to the issuance of the certificate of correction, the USPTO will afford patentee an opportunity to be heard and request reconsideration. Accordingly, patentee has **one month or thirty (30) days**, whichever is longer, to file a request for reconsideration of this patent term adjustment calculation. See 35 U.S.C. 154(b)(3)(B)(ii) and 37 CFR 1.322(a)(4). No extensions of time will be granted under 37 CFR 1.136.

Patentee should use document code PET.OP if electronically filing a request for reconsideration of this patent term adjustment calculation. The patentee must also include the information required by 37 CFR 1.705(b)(2) and the fee required by 37 CFR 1.18(e). If patentee does not file a timely request for reconsideration of this patent term adjustment calculation including the information required by 37 CFR 1.705(b)(2) and the fee required by 37 CFR 1.18(e), the USPTO will issue a certificate of correction reflecting the PTA determination noted above.

Patentee should be aware that in order to preserve the right to review in the United States District Court for the District of Columbia of the USPTO patent term adjustment determination, patentee must ensure that he or she also take the steps required under 35 U.S.C. 154(b)(4)(A) in a timely manner. Nothing in the request for recalculation should be construed as providing an alternative time frame for commencing a civil action under 35 U.S.C. 154(b)(4)(A).

Any questions concerning this decision should be directed to the Office of Patent Legal Administration at 571-272-7702.

UNITED STATES PATENT AND TRADEMARK OFFICE

UNITED STATES DEPARTMENT OF COMMERCE
United States Patent and Trademark Office
Address: COMMISSIONER FOR PATENTS
P.O. Box 1450
Alexandria, Virginia 22313-1450
www.uspto.gov

SUGHRUE MION, PLLC
2100 PENNSYLVANIA AVENUE, N.W.
SUITE 800
WASHINGTON, DC 20037

Mail Date: 04/20/2010

Applicant	: Jin-Woo Joung	: DECISION ON REQUEST FOR
Patent Number	: 7593406	: RECALCULATION of PATENT
Issue Date	: 09/22/2009	: TERM ADJUSTMENT IN VIEW
Appliction No	: 11/414,418	: OF WYETH AND NOTICE OF INTENT TO
Filed	: 05/01/2006	: ISSUE CERTIFICATE OF CORRECTION
		:

The Request for Recalculation is **GRANTED** to the extent indicated.

The patent term adjustment has been determined to be **532** days. The USPTO will *sua sponte* issue a certificate of correction reflecting the amount of PTA days determined by the recalculation.

Prior to the issuance of the certificate of correction, the USPTO will afford patentee an opportunity to be heard and request reconsideration. Accordingly, patentee has **one month or thirty (30) days**, whichever is longer, to file a request for reconsideration of this patent term adjustment calculation. See 35 U.S.C. 154(b)(3)(B)(ii) and 37 CFR 1.322(a)(4). No extensions of time will be granted under 37 CFR 1.136.

Patentee should use document code PET.OP if electronically filing a request for reconsideration of this patent term adjustment calculation. The patentee must also include the information required by 37 CFR 1.705(b)(2) and the fee required by 37 CFR 1.18(e). If patentee does not file a timely request for reconsideration of this patent term adjustment calculation including the information required by 37 CFR 1.705(b)(2) and the fee required by 37 CFR 1.18(e), the USPTO will issue a certificate of correction reflecting the PTA determination noted above.

Patentee should be aware that in order to preserve the right to review in the United States District Court for the District of Columbia of the USPTO patent term adjustment determination, patentee must ensure that he or she also take the steps required under 35 U.S.C. 154(b)(4)(A) in a timely manner. Nothing in the request for recalculation should be construed as providing an alternative time frame for commencing a civil action under 35 U.S.C. 154(b)(4)(A).

Any questions concerning this decision should be directed to the Office of Patent Legal Administration at 571-272-7702.

UNITED STATES PATENT AND TRADEMARK OFFICE

UNITED STATES DEPARTMENT OF COMMERCE
United States Patent and Trademark Office
Address: COMMISSIONER FOR PATENTS
P.O. Box 1450
Alexandria, Virginia 22313-1450
www.uspto.gov

HUNTON & WILLIAMS LLP
INTELLECTUAL PROPERTY DEPARTMENT
1900 K STREET, N.W.
SUITE 1200
WASHINGTON, DC 20006-1109

Mail Date: 04/21/2010

Applicant	: Terry Belton	: DECISION ON REQUEST FOR
Patent Number	: 7620578	: RECALCULATION of PATENT
Issue Date	: 11/17/2009	: TERM ADJUSTMENT IN VIEW
Appliction No	: 11/414,426	: OF WYETH AND NOTICE OF INTENT TO
Filed	: 05/01/2006	: ISSUE CERTIFICATE OF CORRECTION
		:

The Request for Recalculation is **GRANTED** to the extent indicated.

The patent term adjustment has been determined to be **343** days. The USPTO will *sua sponte* issue a certificate of correction reflecting the amount of PTA days determined by the recalculation.

Prior to the issuance of the certificate of correction, the USPTO will afford patentee an opportunity to be heard and request reconsideration. Accordingly, patentee has **one month or thirty (30) days**, whichever is longer, to file a request for reconsideration of this patent term adjustment calculation. See 35 U.S.C. 154(b)(3)(B)(ii) and 37 CFR 1.322(a)(4). No extensions of time will be granted under 37 CFR 1.136.

Patentee should use document code PET.OP if electronically filing a request for reconsideration of this patent term adjustment calculation. The patentee must also include the information required by 37 CFR 1.705(b)(2) and the fee required by 37 CFR 1.18(e). If patentee does not file a timely request for reconsideration of this patent term adjustment calculation including the information required by 37 CFR 1.705(b)(2) and the fee required by 37 CFR 1.18(e), the USPTO will issue a certificate of correction reflecting the PTA determination noted above.

Patentee should be aware that in order to preserve the right to review in the United States District Court for the District of Columbia of the USPTO patent term adjustment determination, patentee must ensure that he or she also take the steps required under 35 U.S.C. 154(b)(4)(A) in a timely manner. Nothing in the request for recalculation should be construed as providing an alternative time frame for commencing a civil action under 35 U.S.C. 154(b)(4)(A).

Any questions concerning this decision should be directed to the Office of Patent Legal Administration at 571-272-7702.

UNITED STATES PATENT AND TRADEMARK OFFICE

Commissioner for Patents
United States Patent and Trademark Office
P.O. Box 1450
Alexandria, VA 22313-1450
www.uspto.gov

COPY MAILED

SEP 22 2006

OFFICE OF PETITIONS

Anna M. Shih
26201 Northwestern Hwy.
P.O. Box 766
Southfield MI 48037

In re Application of :
Scott Adams, David Herbert, Greg Ford, Peter Jacobsen, Harold Bowman and Timothy Green : DECISION
Application No.11/414,447 :
Filed: April 28, 2006 :
Attorney Docket No. 05-ASD-186 (EH) :
Title of Invention: Closed Loop Adaptive Fluid Control System and Method :

This is in response to the petition under 37 CFR 1.47(a) filed July 31, 2006.

The petition is GRANTED.

Petitioner has shown that non-signing inventor Greg Ford has refused to join in the filing of the above-identified application after having been presented with the application papers. The petition attest a copy of the application was sent to non-signing inventor's last known address. The non-signing inventor's failure to respond to the application mailing sufficiently establishes that he refuses to execute the application papers.

The above-identified application and papers have been reviewed and found in compliance with 37 CFR 1.47(a). This application is hereby accorded Rule 1.47(a) status.

Pursuant to petitioner's authorization, deposit account 05-0275 will be charged the $200.00 petition fee.

As provided in Rule 1.47(c), this Office will forward notice of this application's filing to the non-signing inventor at the address given in the petition. Notice of the filing of this application will also be published in the Official Gazette.

After this decision is mailed, the application will be forwarded to the Office of Initial Patent

Examination for further processing.

Telephone inquiries regarding this communication should be directed to the undersigned at (571) 272-3215.

Charlema R. Grant

Petitions Attorney

Office of Petitions

UNITED STATES PATENT AND TRADEMARK OFFICE

Commissioner for Patents
United States Patent and Trademark Office
P.O. Box 1450
Alexandria, VA 22313-1450
www.uspto.gov

Greg E. Ford
4307 Sharon Street
Detroit, MI 48210

In re Application of
Scott Adams, David Herbert, Greg Ford, Peter Jacobsen, Harold Bowman and Timothy Green
Application No.11/414,447
Filed: April 28, 2006
Attorney Docket No. 05-ASD-186 (EH)
Title of Invention: Closed Loop Adaptive Fluid Control System and Method

: LETTER

COPY MAILED

SEP 22 2006

OFFICE OF PETITIONS

Dear Mr. Ford:

You are named as a joint inventor in the above-identified United States patent application filed under the provisions of 35 U.S.C. § 116 (United States Code) and 37 C.F.R. § 1.47(a), Rules of Practice in Patent Cases. Should a patent be granted on the application you will be designated therein as a joint inventor.

As a named inventor you are entitled to inspect any paper in the file wrapper of the application, order copies of all or any part thereof (at a prepaid cost as per 37 C.F.R. § 1.19) or make your position of record in the application. Alternatively, you may arrange to do any of the preceding through a registered patent attorney or agent presenting written authorization from you. If you care to join the application, counsel of record (see below) would presumably assist you. Joining in the application would entail the filing of an appropriate oath or declaration by you pursuant to 37 C.F.R. § 1.63.

Telephone inquiries regarding this communication should be directed to Petitions Attorney Charlema R. Grant at (571) 272-3215. Requests for information regarding your application should be directed to the File Information Unit at (703) 308-2733. Information regarding how to pay for and order a copy of the application, or a specific paper in the application, should be directed to Certification Division at (703) 308-9726 or 1-800-972-6382 (outside the Washington D.C. area).

Charlema R. Grant
Petitions Attorney
Office of Petitions

Anna M. Shih
26201 Northwestern Hwy.
P.O. Box 766
Southfield MI 48037

UNITED STATES PATENT AND TRADEMARK OFFICE

UNITED STATES DEPARTMENT OF COMMERCE
United States Patent and Trademark Office
Address: COMMISSIONER FOR PATENTS
P.O. Box 1450
Alexandria, Virginia 22313-1450
www.uspto.gov

CARLSON, GASKEY & OLDS, P.C./Alcatel-Lucent
400 W MAPLE RD
SUITE 350
BIRMINGHAM, MI 48009

Mail Date: 04/21/2010

Applicant	: Rainer W. Bachl	: DECISION ON REQUEST FOR
Patent Number	: 7643539	: RECALCULATION of PATENT
Issue Date	: 01/05/2010	: TERM ADJUSTMENT IN VIEW
Appliction No	: 11/414,465	: OF WYETH AND NOTICE OF INTENT TO
Filed	: 04/28/2006	: ISSUE CERTIFICATE OF CORRECTION
		:

The Request for Recalculation is **GRANTED** to the extent indicated.

The patent term adjustment has been determined to be **802** days. The USPTO will *sua sponte* issue a certificate of correction reflecting the amount of PTA days determined by the recalculation.

Prior to the issuance of the certificate of correction, the USPTO will afford patentee an opportunity to be heard and request reconsideration. Accordingly, patentee has **one month or thirty (30) days**, whichever is longer, to file a request for reconsideration of this patent term adjustment calculation. See 35 U.S.C. 154(b)(3)(B)(ii) and 37 CFR 1.322(a)(4). No extensions of time will be granted under 37 CFR 1.136.

Patentee should use document code PET.OP if electronically filing a request for reconsideration of this patent term adjustment calculation. The patentee must also include the information required by 37 CFR 1.705(b)(2) and the fee required by 37 CFR 1.18(e). If patentee does not file a timely request for reconsideration of this patent term adjustment calculation including the information required by 37 CFR 1.705(b)(2) and the fee required by 37 CFR 1.18(e), the USPTO will issue a certificate of correction reflecting the PTA determination noted above.

Patentee should be aware that in order to preserve the right to review in the United States District Court for the District of Columbia of the USPTO patent term adjustment determination, patentee must ensure that he or she also take the steps required under 35 U.S.C. 154(b)(4)(A) in a timely manner. Nothing in the request for recalculation should be construed as providing an alternative time frame for commencing a civil action under 35 U.S.C. 154(b)(4)(A).

Any questions concerning this decision should be directed to the Office of Patent Legal Administration at 571-272-7702.

UNITED STATES PATENT AND TRADEMARK OFFICE

COMMISSIONER FOR PATENTS
UNITED STATES PATENT AND TRADEMARK OFFICE
P.O. BOX 1450
ALEXANDRIA, VA 22313-1450
www.uspto.gov

SUMMA, ALLAN & ADDITON, P.A.
11610 NORTH COMMUNITY HOUSE ROAD
SUITE 200
CHARLOTTE NC 28277

COPY MAILED

JAN 19 2007

OFFICE OF PETITIONS

Applicant: Nie et al.
Appl. No.: 11/414,476
Filing Date: April 28, 2006
Title: APPARATUS FOR COLLECTING CHARGING INFORMATION OF A DATA SERVICE AND CHARGING METHOD THEREOF
Attorney Docket No.: 1015.10
Pub. No.: US 2006/0193344 A1
Pub. Date: August 31, 2006

This is a decision on the request for corrected of patent application publication under 37 CFR 1.221(b), filed on September 5, 2006, for the above-identified application

The request is DISMISSED.

Applicant requests that the application be republished because the patent application publication contains a material error on front page of the publication, as the first inventor's name "Yanbo Nie" is misprinted as "Ynabo Nie."

37 CFR 1.221 (b) is applicable "only when the Office makes a material mistake which is apparent from Office records." A material mistake must affect the public's ability to appreciate the technical disclosure of the patent application publication, to determine the scope of the patent application publication, or to determine the scope of the provisional rights that an applicant may seek to enforce upon issuance of a patent. [1]

The request is dismissed, as the paper was not signed in compliance with 37 CFR 1.31-1.34, 37 CFR 10.14, 37 CFR 10.18, and 37 CFR 10.47. Applicant is reminded that only registered practitioners may practice before the Office.

The applicant is advised that a "request for republication of an application previously published" may be filed under 37 CFR 1.221(a). Such a request for republication "must include a copy of the application compliance with the Office's electronic filing system requirements and be accompanied by the publication fee set forth in § 1.18 (d) and the processing fee set forth in § 1.17 (i)." If the request for republication does not comply with the electronic filing system

[1] Changes to Implement Eighteen-Month Publication of Patent Applications, 65 FR 57023, 57038 (Sept. 20, 2000), 1239, Off. Gaz. Pat. Office Notices 63, 75 (Oct. 10, 2000) (final rule).

requirements, the republication will not take place and the publication fee set forth in § 1.18 (d) will be refunded. The processing fee will be retained.

Any request for republication under 37 CFR 1.221(a), must be submitted via the EFS system and questions or request for reconsideration of the decision, should be addressed as follows:

By mail to: Mail Stop PGPUB
Commissioner for Patents
P.O. Box 1450
Alexandria, Va. 22313-1450

By facsimile: 571-273-8300

Inquiries relating to this matter may be directed to Mark Polutta at (571) 272-7709 (voice).

Mark Polutta
Legal Advisor
Office of Patent Legal Administration
Office of the Deputy Commissioner
for Patent Examination Policy

UNITED STATES PATENT AND TRADEMARK OFFICE

Commissioner for Patents
United States Patent and Trademark Office
P.O. Box 1450
Alexandria, VA 22313-1450
www.uspto.gov

FULBRIGHT & JAWORSKI L.L.P.
80 SOUTH EIGHTH STREET
SUITE 2100
MINNEAPOLIS MN 55402

COPY MAILED

OCT 26 2006

OFFICE OF PETITIONS

In re Application of :
Dobihal :
Application No. 11/414,520 :
Deposited: April 27, 2006 :
Attorney Docket No. 22,418-04US1 :
For: WINGED DOG TRAINING DEVICE

ON PETITION

This is a decision on the petition filed July 28, 2006 (certificate of mailing date July 24, 2006), requesting that the Office partially withdraw the Notice of Incomplete Nonprovisional Application (Notice) mailed May 24, 2006, insofar as it alleges that a claim was not filed on April 27, 2006. The petition will be treated under 37 CFR 1.53(e).

The petition under 37 CFR 1.53(e) is **dismissed**.

Any reconsideration petition should be filed within two months of the mail date of this decision.

The application was deposited on April 27, 2006. On May 24, 2006, the Office of Initial Patent Examination mailed a Notice stating that the application had not been accorded a filing date because the specification did not contain at least one claim, as is required by 35 U.S.C. 112.

In response, the present petition was filed. Petitioner states that the specification did contain a claim; and therefore, the application is entitled to a filing date of April 27, 2006.

MPEP 608.01(m) - Form of Claims states in pertinent part:

1. The claim or claims must commence on a separate physical sheet or electronic page and should appear after the detailed description of the invention. Any sheet including a claim or portion of a claim may not contain any other parts of the application or other material. While there is no set statutory form for claims, the present Office practice is to insist that each claim must be the object of a sentence starting with "I (or we) claim," "The invention claimed is" (or the equivalent).

The "claim" filed on April 27, 2006 does not begin with "I claim" or "The invention claimed is". It begins with "A pet training device comprising".

Therefore, the Notice mailed May 24, 2006, was correct in stating that a claim was omitted. The "Notice" was properly mailed and will not be withdrawn.

The petition to withdraw the May 24, 2006 Notice is dismissed . Since the present petition was not necessitated by any error on the part of the Office, the petition fee will be retained.

However, a filing date of April 27, 2006 will be accorded to the above-identified application once applicant files a preliminary amendment that rephrases the existing unacceptable claim to begin with "I claim" or "The invention claimed is".

The application will be retained in the Office of Petitions until a reconsideration petition is filed.

Telephone inquiries concerning this decision should be directed to the undersigned at (571) 272-3230.

Shirene Willis Brantley

Shirene Willis Brantley
Senior Petitions Attorney
Office of Petitions
Office of the Deputy Commissioner
for Patent Examination Policy

UNITED STATES PATENT AND TRADEMARK OFFICE

Commissioner for Patents
United States Patent and Trademark Office
P.O. Box 1450
Alexandria, VA 22313-1450
www.uspto.gov

FULBRIGHT & JAWORSKI L.L.P.
80 SOUTH EIGHTH STREET
SUITE 2100
MINNEAPOLIS MN 55402

COPY MAILED

FEB 0 1 2007

OFFICE OF PETITIONS

In re Application of :
Dobihal :
Application No. 11/414,520 : ON PETITION
Deposited: April 27, 2006 :
Attorney Docket No. 22,418-04US1 :
For: WINGED DOG TRAINING DEVICE

This is a decision on the reconsideration petition under 37 CFR 1.53(e), filed December 26, 2006, to accord a filing date of April 27, 2006 to the above-identified application.

The petition is **GRANTED**.

The application was deposited on April 27, 2006. On May 24, 2006, the Office of Initial Patent Examination mailed a Notice stating that the application had not been accorded a filing date because the specification did not contain at least one claim, as is required by 35 U.S.C. 112.

Petitioner filed a petition on July 28, 2006, arguing that the specification did contain a claim; and therefore, the application was entitled to a filing date of April 27, 2006.

A review of the "claim" filed on April 27, 2006 revealed that it did not begin with "I claim" or "The invention claimed is". It began with "A pet training device comprising".

Therefore, the Notice mailed May 24, 2006, was correct in stating that a claim was omitted. The "Notice" was properly mailed and was not withdrawn. The July 28, 2006 petition was dismissed on October 26, 2006.

In response to the October 26, 2006 decision on petition, applicant has filed a preliminary amendment that adds additional claims and rephrases the original unacceptable claim to begin with "I claim" or "The invention claimed is".

Therefore, a filing date of April 27, 2006 will be accorded to the above-identified application.

After the mailing of this decision, the file will be returned to the Office of Initial Patent Examination for further processing with a filing date of **April 27, 2006**.

Telephone inquiries concerning this decision should be directed to the undersigned at (571) 272-3230.

Shirene Willis Brantley
Senior Petitions Attorney
Office of Petitions

UNITED STATES PATENT AND TRADEMARK OFFICE

Commissioner for Patents
United States Patent and Trademark Office
P.O. Box 1450
Alexandria, VA 22313-1450
www.uspto.gov

LAHIVE & COCKFIELD, LLP
ONE POST OFFICE SQUARE
BOSTON MA 02109-2127

COPY MAILED
OCT 23 2006
OFFICE OF PETITIONS

In re Application of :
Fanger et al. :
Application No. 11/414,532 : DECISION ON PETITION
Filed: April 28, 2006 :
Attorney Docket No. UMY-090BCN :

This is a decision on the petition filed August 2, 2006, to accord the above-identified application a filing date of April 28, 2006.

On April 28, 2006, applicants deposited the above-identified application. On June 2, 2006, the Office of Initial Patent Examination mailed a Notice Of Incomplete Nonprovisional Application, requiring, *inter alia*, drawings of applicants' invention and stating that the filing date would be the date of receipt of the omitted drawings.

As stated in MPEP § 601.01(f), it is the practice of the Office to treat an application that contains at least one process or method claim as an application for which a drawing is not necessary for an understanding of the invention under 35 U.S.C. 113 (first sentence).

MPEP § 601.01(f) also states that:

> A nonprovisional application having at least one claim, or a provisional application having at least some disclosure, directed to the subject matter discussed above for which a drawing is usually not considered essential for a filing date, describing drawing figure(s) in the specification, but filed without drawings will be treated as an application filed without all of the drawing figures referred to in the specification as discussed in MPEP § 601.01(g), so long as the application contains something that can be construed as a written description and the names of all the inventors.

This application contains method claims. Therefore, the application should have been treated as an application filed without all of the drawing figures referred to in the specification as discussed in MPEP § 601.01(g).

MPEP § 601.01(g) states that if an application is filed without all of the drawing figure(s) referred to in the specification, a "Notice of Omitted Item(s)" is mailed indicating that the application has been accorded a filing date, but is lacking some of the figures of drawings described in the specification.

In view of the above, the requirement for submission of drawings as set forth in the "Notice of Incomplete Application" mailed June 2, 2006, was mailed in error and is hereby withdrawn.

The petition is **granted**. The application is accorded a filing date of April 28, 2006, without any drawings as a part of the original disclosure.

The $400.00 petition fee is unnecessary and will be refunded to the Deposit Account.

This matter is being referred to the Office of Initial Patent Examination for further processing with a filing date of April 28, 2006, and an indication in the Office records that zero "0" sheets of drawings were present on filing.

Any inquiries related to this decision should be directed to the undersigned at (571) 272- 3211.

C. T. Donnell

Christina Tartera Donnell
Senior Petitions Attorney
Office of Petitions

UNITED STATES PATENT AND TRADEMARK OFFICE

Commissioner for Patents
United States Patent and Trademark Office
P.O. Box 1450
Alexandria, VA 22313-1450
www.uspto.gov

LAHIVE & COCKFIELD, LLP
FLOOR 30, SUITE 3000
ONE POST OFFICE SQUARE
BOSTON MA 02109

MAILED

JUL 19 2010

OFFICE OF PETITIONS

In re Application :
Gary R. Fanger et al. :
Application No. 11/414,532 : DECISION ON APPLICATION
Filed: April 28, 2006 : FOR PATENT TERM ADJUSTMENT
Attorney Docket No. **120443-2001.1** :

This is in response to the PATENT TERM ADJUSTMENT PETITION AND STATEMENT UNDER 37 C.F.R. § 1.705(b) filed February 11, 2010. Applicant requests that the determination of patent term adjustment be corrected to 306 days, in part on the basis that the Office will take in excess of three years to issue this patent.

As the instant application for patent term adjustment requests reconsideration of the patent term adjustment as it relates to the Office's failure to issue the patent within three years of the filing date, the application for patent term adjustment under 37 CFR 1.705(b) is **DISMISSED as PREMATURE**.

Knowledge of the actual date the patent issues is required to calculate the amount, if any, of additional patent term patentees are entitled to for Office failure to issue the patent within three years. See 37 CFR 1.702(b). (This is true even where a request for continued examination (RCE) was filed). The computer will not undertake the § 1.702(b) calculation until the actual date of issuance of the patent has been determined. Likewise, the computer will not calculate any further Office delay under 37 CFR 1.702(a)(4) or applicant delay under 37 CFR 1.704(c)(10) until the actual date of issuance of the patent has been determined. As such, the Office cannot make a determination on the patent term adjustment relating to those provisions until the patent has issued.

Requesting reconsideration of the patent term adjustment to be indicated on the patent under 37 CFR 1.705(b) based on the initial determination of patent term adjustment and a projected issuance date of the patent (or even the filing date of the request for continued examination) is premature. Accordingly, it is appropriate to dismiss such a request as premature.

Rather than file an application for patent term adjustment under 37 CFR 1.705(b) contesting the 37 CFR 1.702(b) calculation at the time of the mailing of the notice of allowance, applicants are advised that they may wait until the time of the issuance of

the patent and file a request for reconsideration of the patent term adjustment pursuant to 37 CFR 1.705(d). As the USPTO does not calculate the amount of time earned pursuant to 37 CFR 1.702(b) until the time of the issuance of the patent, the Office will consider any request for reconsideration of the patent term adjustment due to an error in the calculation of 37 CFR 1.702(b) to be timely if the request for reconsideration is filed within two months of the issuance of the patent. However, as to all other bases for contesting the initial determination of patent term adjustment received with the notice of allowance, applicants must timely file an application for patent term adjustment prior to the payment of the issue fee.[1]

The Office acknowledges submission of the $200.00 fee set forth in 37 CFR 1.18(e) for consideration of the application for patent term adjustment under 37 CFR 1.705(b).

Any request for reconsideration of the patent term adjustment indicated on the patent must be timely filed within two months after issuance pursuant to 37 CFR 1.705(d).

The Office of Data Management has been advised of this decision. This application is being referred to the Office of Data Management for issuance of the patent.

Telephone inquiries specific to this decision should be directed to Senior Petitions Attorney Patricia Faison-Ball at (571) 272-3212.

Anthony Knight
Director
Office of Petitions

[1] For example, if applicants dispute both the calculation of patent term adjustment under 37 CFR 1.702(a)(1) for Office failure to mail a first Office action or notice of allowance not later than fourteen months after the date on which the application was filed, and under 37 CFR 1.702(b) for Office failure to issue a patent within three years of the actual filing date of the application, then applicants must still timely file an application for patent term adjustment prior to the payment of the issue fee to contest the calculation of Office delay in issuing a first Office action or notice of allowance. See 37 CFR 1.705(b) and 35 U.S.C. 154(b)(3)(B). A dispute as to the calculation of the § 1.702(a)(1) period raised on request for reconsideration of patent term adjustment under 37 CFR 1.705(d) will be dismissed as untimely filed.

UNITED STATES PATENT AND TRADEMARK OFFICE

UNITED STATES DEPARTMENT OF COMMERCE
United States Patent and Trademark Office
Address: COMMISSIONER FOR PATENTS
P.O. Box 1450
Alexandria, Virginia 22313-1450
www.uspto.gov

SHUMAKER & SIEFFERT, P. A.
1625 RADIO DRIVE
SUITE 300
WOODBURY, MN 55125

Mail Date: 04/20/2010

Applicant	: Steven M. Goetz	: DECISION ON REQUEST FOR
Patent Number	: 7623919	: RECALCULATION of PATENT
Issue Date	: 11/24/2009	: TERM ADJUSTMENT IN VIEW
Appliction No	: 11/414,536	: OF WYETH AND NOTICE OF INTENT TO
Filed	: 04/28/2006	: ISSUE CERTIFICATE OF CORRECTION
		:

The Request for Recalculation is **GRANTED** to the extent indicated.

The patent term adjustment has been determined to be **594** days. The USPTO will *sua sponte* issue a certificate of correction reflecting the amount of PTA days determined by the recalculation.

Prior to the issuance of the certificate of correction, the USPTO will afford patentee an opportunity to be heard and request reconsideration. Accordingly, patentee has **one month or thirty (30) days**, whichever is longer, to file a request for reconsideration of this patent term adjustment calculation. See 35 U.S.C. 154(b)(3)(B)(ii) and 37 CFR 1.322(a)(4). No extensions of time will be granted under 37 CFR 1.136.

Patentee should use document code PET.OP if electronically filing a request for reconsideration of this patent term adjustment calculation. The patentee must also include the information required by 37 CFR 1.705(b)(2) and the fee required by 37 CFR 1.18(e). If patentee does not file a timely request for reconsideration of this patent term adjustment calculation including the information required by 37 CFR 1.705(b)(2) and the fee required by 37 CFR 1.18(e), the USPTO will issue a certificate of correction reflecting the PTA determination noted above.

Patentee should be aware that in order to preserve the right to review in the United States District Court for the District of Columbia of the USPTO patent term adjustment determination, patentee must ensure that he or she also take the steps required under 35 U.S.C. 154(b)(4)(A) in a timely manner. Nothing in the request for recalculation should be construed as providing an alternative time frame for commencing a civil action under 35 U.S.C. 154(b)(4)(A).

Any questions concerning this decision should be directed to the Office of Patent Legal Administration at 571-272-7702.

UNITED STATES PATENT AND TRADEMARK OFFICE

UNITED STATES DEPARTMENT OF COMMERCE
United States Patent and Trademark Office
Address: COMMISSIONER FOR PATENTS
P.O. Box 1450
Alexandria, Virginia 22313-1450
www.uspto.gov

SHUMAKER & SIEFFERT, P. A.
1625 RADIO DRIVE
SUITE 300
WOODBURY, MN 55125

Mail Date: 05/17/2010

Applicant : Steven M. Goetz
Patent Number : 7623919
Issue Date : 11/24/2009
Application No: 11/414,536
Filed : 04/28/2006

: NOTICE CONCERNING IMPROPER
: CALCULATION OF PATENT TERM
: ADJUSTMENT BASED UPON USPTO
: IMPROPERLY MEASURING REDUCTION
: PERIOD UNDER 37 CFR 1.704(c)(10).

The United States Patent and Trademark Office (USPTO) discovered that in processing the recent recalculation decisions mailed in response to patentee's filed Request for Recalculation of Patent Term Adjustment in view of Wyeth, the USPTO improperly measured the reduction period for reductions under 37 CFR 1.704(c)(10). Pursuant to 37 CFR 1.704(c)(10), patentee's reduction begins on the date of filing the amendment under 37 CFR 1.312 ("1.312 amendment") or other related paper and ends on the date that the Office mails a response to the filing of the 1.312 amendment or other paper. It has been discovered that during the recalculation, the calculation failed to the limit the reduction to the mail date of the response to the 1.312 amendment or other paper. Accordingly, patentee's reductions were greater than warranted.

This notice **VACATES** the previous GRANTED request for recalculation and provides patentee with a revised GRANTED recalculation.

The patent term adjustment has been determined to be **640** days. The USPTO will *sua sponte* issue a certificate of correction reflecting the amount of patent term adjustment (PTA) days determined by the recalculation.

Prior to the issuance of the certificate of correction, the USPTO will afford patentee an opportunity to be heard and request reconsideration. Accordingly, patentee has **one month or thirty (30) days** from the mail date of this notice, whichever is longer, to file a request for reconsideration of this PTA calculation. See 35 U.S.C. § 154(b)(3)(B)(ii) and 37 CFR 1.322(a)(4).

Patentee should use document code PET.OP if electronically filing a request for reconsideration of this PTA calculation. The patentee must also include the information required by 37 CFR 1.705(b)(2), and the fee required by 37 CFR 1.18(e). If patentee does not file a timely request for reconsideration of this PTA calculation, including the information required by 37 CFR 1.705(b)(2) and the fee required by 37 CFR 1.18(e), the USPTO will issue a certificate of correction reflecting the PTA determination noted above.

Patentee should be aware that in order to preserve the right of review of the USPTO's PTA determination in the United States District Court for the District of Columbia, patentee must ensure that the steps required under 35 U.S.C. § 154 (b)(4) are taken in a timely manner. Nothing in the request for recalculation should be construed as providing an alternative time frame for commencing a civil action under 35 U.S.C. § 154(b)(4).

UNITED STATES PATENT AND TRADEMARK OFFICE

Commissioner for Patents
United States Patent and Trademark Office
P.O. Box 1450
Alexandria, VA 22313-1450
www.uspto.gov

MCDERMOTT WILL & EMERY LLP
600 13TH STREET, N.W.
WASHINGTON, DC 20005-3096

COPY MAILED

MAY 14 2007

OFFICE OF PETITIONS

In re Application of

Ishikawa, et al.

Application No. 11/414,563

Filed: May 1, 2006

Attorney Docket No. 062807-0341

DECISION ON PETITION

This is a decision on the petition to withdraw the holding of abandonment under 37 CFR 1.181(a), filed March 22, 2007.

The petition is **granted**.

This application was held abandoned on July 17, 2006, after no reply was received to the Notice . The notice set forth a shortened period for reply of two- months from its mailing date. The instant petition was filed on March 22, 2007. Petitioner maintains that the Notice to File Missing Parts was never received and provides a copy of the relevant docketing calendar as proof of the same.

Section 711.03(c)(II) of the *Manual of Patent Examining Procedure* ("MPEP") provides that in order to establish non-receipt of an Office action so as prove that the imposition of a holding of abandonment is improper, petitioner must: 1) provide a statement to the Office indicating that the Office action was not received by petitioner; 2) include in the statement an attestation to the fact that a review of the file jacket and docket records maintained by petitioner indicates that the Office action was not received; and 3) provide a copy of the docket record where the non-received Office communication would have been entered had it been received and docketed.

Petitioner has met the burden of proof as established by Section 711.03(c)(II) of the MPEP. The holding of abandonment is, therefore, withdrawn.

The application file is being forwarded Technology Center 2800, GAU 2876 for further processing.

Questions concerning this decision should be directed to the undersigned at (571) 272-3222.

Kenya A. McLaughlin
Petitions Attorney
Office of Petitions

UNITED STATES PATENT AND TRADEMARK OFFICE

Commissioner for Patents
United States Patent and Trademark Office
P.O. Box 1450
Alexandria, VA 22313-1450
www.uspto.gov

ALBERT B. KIMBALL, JR.
BRACEWELL & PATTERSON LLP
711 LOUISANA SUITE 2300
HOUSTON, TX 77002

COPY MAILED

NOV 0 6 2007

OFFICE OF PETITIONS

In re Application of :
Castillo et al :
Application No. 11/414,565 : DECISION ON PETITION
Filed: April 28, 2006 :
Attorney Docket No. 076287.000050 :

This is a decision on the petition under 37 CFR 1.137(b), filed March 22, 2007, to revive the above-identified application.

The petition is **GRANTED.**

The application became abandoned for failure to reply in a timely manner to the Notice to File Missing Parts of Nonprovisional Application (Notice), mailed May 22, 2006, which required the submission of an executed oath or declaration, a $130 surcharge fee for its late filing, and replacement drawings in compliance with 37 CFR 1.84 and 37 CFR 1.121(d). The Notice set a period for reply of two (2) months from the mail date of the Notice. No extensions of time were obtained under the provisions of 37 CFR 1.136(a). Accordingly, the application became abandoned on July 25, 2006 (July 22, 2006, the due date, is a Saturday). A Notice of Abandonment was mailed on January 25, 2007.

The petition satisfies the requirements of 37 CFR 1.137(b) in that petitioner has supplied (1) the reply (items required by the Notice of May 22, 2006), (2) the petition fee of $1,500, and (3) a proper statement of unintentional delay. Accordingly, the failure to timely reply to the Notice of May 22, 2006 is accepted as being unintentionally delayed.

This application is being referred to the Office of Initial Patent Examination for further processing in accordance with this decision.

Telephone inquiries concerning this decision should be directed to the undersigned at (571) 272-3218.

Frances Hicks
Petitions Examiner
Office of Petitions

UNITED STATES PATENT AND TRADEMARK OFFICE

UNITED STATES DEPARTMENT OF COMMERCE
United States Patent and Trademark Office
Address: COMMISSIONER FOR PATENTS
P.O. Box 1450
Alexandria, Virginia 22313-1450
www.uspto.gov

ALBERT B. KIMBALL, JR.
BRACEWELL & PATTERSON L L P
711 LOUISANA SUITE 2300
HOUSTON, TX 77002

Mail Date: 05/25/2010

Applicant	: Jorge A. Pita	: DECISION ON REQUEST FOR
Patent Number	: 7620534	: RECALCULATION of PATENT
Issue Date	: 11/17/2009	: TERM ADJUSTMENT IN VIEW
Application No	: 11/414,566	: OF WYETH
Filed	: 04/28/2006	:
		:

The Patentee's Request for Recalculation is **DISMISSED.**

This Request is deemed ineligible for consideration for one or more of the following reasons:

(A). The patent for which PTA recalculation is requested is either a design or reissue application or is a reexamination proceeding;

(B). The patent for which PTA recalculation is requested resulted from a utility or plant application filed under 35 USC 111(a) before May 29, 2000 and no CPA filed in the application on/after May 29, 2000;

(C). The patent for which PTA recalculation is requested resulted from an international application in which the international filing date was before May 29, 2000 and no CPA filed in the application on/after May 29, 2000;

(D). The patent for which PTA recalculation is requested issued on/after March 2, 2010;

(E). The Request for Recalculation was filed more than 180 days after the grant date of the patent and the request was not filed within two months of a dismissal of a request for reconsideration of the of the patent term under 37 CFR 1.705(d);

(F). The Request for Recalculation is not solely limited to USPTO pre-Wyeth interpretation of 35 U.S.C. 154(b)(2)(A);

or

(G). A civil action was filed pursuant to 35 U.S.C. 154(b)(4)(A)concerning the same patent at issue in this request.

Patentee may file a reply to this decision dismissing the Request for Recalculation. Patentee must file such reply within one month or thirty days, whichever is longer, of the mail date of the decision dismissing the Request for Recalculation. No fee is required if patentee is asserting in the reply that the dismissal for ineligibility is improper.

Patentee should use document code PET.OP if electronically filing a reply to this dismissal. If the USPTO finds that the request was improperly deemed ineligible, the USPTO will mail applicant a recalculation determination.

Patentee should be aware that in order to preserve the right to review in the United States District Court for the District of Columbia of the USPTO patent term adjustment determination, patentee must ensure that he or she also take the steps required under 35 U.S.C. 154(b)(4)(A). Nothing in the request for recalculation should be construed as providing an alternative time frame for commencing a civil action under 35 U.S.C. 154 (b)(4)(A).

Any questions concerning this decision should be directed to the Office of Patent Legal Administration at 571-272-7702.

UNITED STATES PATENT AND TRADEMARK OFFICE

Commissioner for Patents
United States Patent and Trademark Office
P.O. Box 1450
Alexandria, VA 22313-1450
www.uspto.gov

Patent No. : 7,414,899
Ser. No. : 11/414,570
Inventor(s) : Oh, et. al.
Issued : August 19, 2008
Title : METHOD AND APPARATUS FOR EARLY WRITE TERMINATION IN A SEMICONDUCTOR MEMORY
Docket No. : 2005P53771US/5682-010

Re: Request for Certificate of Correction

Consideration has been given your request for the issuance of a certificate of correction for the above-identified patent under the provisions of Rule(s) 1.322.

Assignees' names and addresses (assignment data) printed in a patent, are based *solely* on information supplied in the appropriate space for identifying the assignment data, i.e., item 3 of the Issue Fee Transmittal Form PTOL-85B. Granting of a request under 37 CFR 3.81(b) is required to correct applicant's error providing ***incorrect or erroneous*** assignment data, *before* issuance of a Certificate of Correction, under 37 CFR 1.323 *(see Manual of Patent Examining Procedures (M.P.E.P) Chp.1400, sect. 1481).* This procedure is required *at any time after the issue fee is paid*, including after issuance of the patent.

In view of the foregoing, your request is hereby denied.

A request to correct the Assignee under 37 CFR 3.81(b) should include:

A. **the processing fee set forth in 37 CFR 1.117(h) (currently $130);**
B. a statement that the failure to include the correct assignee name on the PTOL-85B was inadvertent; and
C. a copy of the Notice of Recordation of Assignment Document, reflecting the reel and frame number where the assignment(s) is recorded and/or reflecting proof of *the date* the assignment was submitted for recordation.

In the Request, Applicant(s) may request that the file be forwarded to Certificates of Correction Branch, for issuance of a Certificate of Correction, if the Request is granted.

Any request under 37 CFR 3.81(b) should be directed to the following address or facsimile number:

By mail:
Mail Stop PETITIONS
Commissioner for Patents
Post Office Box 1450
Alexandria, VA 22313-1450

By hand: Customer Service Window
Mail Stop Petitions
Randolph Building
401 Dulany Street
Alexandria, VA 22314

By fax: (703) 872-9306
ATTN: Office of Petitions

If a fee (currently $100) was previously submitted for consideration of a Request for Certificate of Correction, under CFR 1.323, to correct assignment data, , no additional fee is required.

Eva James
For Mary Diggs
Decisions & Certificates
of Correction Branch
(703) **308-9390 ext. 124** or 125

Mark R. Bilak
Coats & Bennett, PLLC
1400 Crescent Green, Suite 300
Cary, NC 27518

EJ.

IN THE UNITED STATES PATENT AND TRADEMARK OFFICE

In re Application of: Mohajeri et al.

Application No.: Not Yet Assigned 11/414572 Examiner: Not Yet Assigned Langel

Date Filed: Herewith 4-28-06 Group: Not Yet Assigned 1754

For: CATALYTIC DEHYDROGENATION OF AMINE BORANE COMPLEXES

PETITION TO MAKE SPECIAL UNDER 37 C.F.R. § 1.102(c)

Commissioner for Patents
P. O. Box 1450
Alexandria, VA 22313-1450

Sir:

Pursuant to 37 CFR §1.102 and MPEP 708.02, Applicants hereby Petition to Make Special for an advancement of examination the above-described United States Patent Application. Since the above-referenced Application is believed to qualify under 37 C.F.R. § 1.102(c), this Petition is filed without fee. However, should a fee be determined to be required, the Commissioner is hereby authorized to charge any deficiency in any fees due with the filing of this paper, or during prosecution of this application to Deposit Account No. 50-0951.

As noted in the background of the invention, known methods for low temperature hydrogen release from ammonia borane (AB) complex and related materials all have significant shortcomings. Thermolytic dehydrogenation requires too high a temperature and generates a significant concentration of by-product impurities which make this process unfit for certain important applications, such as PEM fuel cells. Although Published U.S. Application No. 20050180916 to Autrey et al. discloses dehydrogenation of AB complex at about 85 °C, a special

PETITION GRANTED

William Krynski
Special Program Examiner
Technology Center 1700

SEP 25 2006

UNITED STATES PATENT AND TRADEMARK OFFICE

Commissioner for Patents
United States Patent and Trademark Office
P.O. Box 1450
Alexandria, VA 22313-1450
www.uspto.gov

SCHWABE, WILLIAMSON & WYATT, P.C.
PACWEST CENTER, SUITE 1900
1211 SW FIFTH AVENUE
PORTLAND, OR 97204

MAILED

MAY 22 2009

OFFICE OF PETITIONS

In re Application of	:	
David H. J. Glassco, et al.	:	
Application No. 11/414,585	:	DECISION ON PETITION
Filed: April 28, 2006	:	TO WITHDRAW
Attorney Docket No. 113335-147898	:	FROM RECORD
	:	

This is a decision on the Request to Withdraw as attorney or agent of record under 37 C.F.R. § 1.36(b), filed March 24, 2009.

The request is **APPROVED**.

A grantable request to withdraw as attorney/agent of record must be signed by every attorney/agent seeking to withdraw or contain a clear indication that one attorney is signing on behalf of another/others. A request to withdraw will not be approved unless at least 30 (thirty) days would remain between the date of approval and the later of the expiration date of a time to file a response or the expiration date of the maximum time period which can be extended under 37 C.F.R. § 1.136(a).

The request was signed by Al AuYeung on behalf of all attorneys of record. All attorneys/agents have been withdrawn. Applicant is reminded that there is no attorney of record at this time.

All future correspondence will be directed to the first named inventor David J. Glassco at the address indicated below.

There is an outstanding Office action mailed January 22, 2009 that requires a reply from the applicant.

Telephone inquiries concerning this decision should be directed to Terri Williams at 571-272-2991.

Terri Williams
Petitions Examiner
Office of Petitions

cc: **David H. J. Glassco**
16068 80A Avenue
Surrey, BC V3S 8H8

UNITED STATES PATENT AND TRADEMARK OFFICE

UNITED STATES DEPARTMENT OF COMMERCE
United States Patent and Trademark Office
Address: COMMISSIONER FOR PATENTS
P.O. Box 1450
Alexandria, Virginia 22313-1450
www.uspto.gov

APPLICATION NUMBER	FILING OR 371(C) DATE	FIRST NAMED APPLICANT	ATTY. DOCKET NO./TITLE
11/414,585	04/28/2006	David H. J. Glassco	113335-147898

CONFIRMATION NO. 2810

POWER OF ATTORNEY NOTICE

25943
SCHWABE, WILLIAMSON & WYATT, P.C.
PACWEST CENTER, SUITE 1900
1211 SW FIFTH AVENUE
PORTLAND, OR 97204

OC00000036100453

Date Mailed: 05/21/2009

NOTICE REGARDING CHANGE OF POWER OF ATTORNEY

This is in response to the Power of Attorney filed 03/24/2009.

- The withdrawal as attorney in this application has been accepted. Future correspondence will be mailed to the new address of record. 37 CFR 1.33.

/tswilliams/

Office of Data Management, Application Assistance Unit (571) 272-4000, or (571) 272-4200, or 1-888-786-0101

UNITED STATES PATENT AND TRADEMARK OFFICE

Commissioner for Patents
United States Patent and Trademark Office
P.O. Box 1450
Alexandria, VA 22313-1450
www.uspto.gov

MORRISON & FOERSTER LLP
1650 TYSONS BOULEVARD
SUITE 300
MCLEAN, VA 22102

COPY MAILED

AUG 20 2007

OFFICE OF PETITIONS

In re Application of :
Xing Su :
Application No. 11/414,611 : DECISION ON PETITION
Filed: April 28, 2006 : TO WITHDRAW
Attorney Docket No. 070702007511 : FROM RECORD
:

This is a decision on the Request to Withdraw as attorney or agent of record under 37 C.F.R. § 1.36(b) filed April 2, 2007.

The request is **DISMISSED** as moot.

A review of the file record indicates that the power of attorney to Morrison & Foerster, LLP has been revoked by the assignee of the patent application on August 8, 2007. Accordingly, the request to withdraw under 37 C.F.R. § 1.36(b) is moot.

All future communications from the Office will continue to be directed to the below-listed address until otherwise notified by applicant.

Telephone inquires concerning this decision should be directed to undersigned at 571-272-1642.

April M. Wise
Petitions Examiner
Office of Petitions

cc: RAJ S. DAVE'
DARBY & DARBY, PC
PO BOX 5257
NEW YORK, NY 10150-5257

UNITED STATES PATENT AND TRADEMARK OFFICE

UNITED STATES DEPARTMENT OF COMMERCE
United States Patent and Trademark Office
Address: COMMISSIONER FOR PATENTS
P.O. Box 1450
Alexandria, Virginia 22313-1450
www.uspto.gov

APPLICATION NUMBER	FILING OR 371 (c) DATE	FIRST NAMED APPLICANT	ATTY. DOCKET NO./TITLE
11/414,611	04/28/2006	Xing Su	070702007511

CONFIRMATION NO. 3418

OC000000025457270

Raj S. Dave
Morrison & Foerster LLP
Suite 300
1650 Tysons Blvd.
McLean, VA 22102

Date Mailed: 08/20/2007

NOTICE REGARDING CHANGE OF POWER OF ATTORNEY

This is in response to the Power of Attorney filed 08/08/2007.

- The Power of Attorney to you in this application has been revoked by the assignee who has intervened as provided by 37 CFR 3.71. Future correspondence will be mailed to the new address of record(37 CFR 1.33).

Office of Initial Patent Examination (571) 272-4000, or 1-800-PTO-9199
FORMER ATTORNEY/AGENT COPY

UNITED STATES PATENT AND TRADEMARK OFFICE

Commissioner for Patents
United States Patent and Trademark Office
P.O. Box 1450
Alexandria, VA 22313-1450
www.uspto.gov

COPY MAILED

SEP 0 3 2009

OFFICE OF PETITIONS

CLIENT 21058
C/O DARBY & DARBY, PC
P.O. BOX 770
CHURCH STREET STATION
NEW YORK, NY 10008-0770

In re Application of :
Xing Su :
Application No. 11/414,611 : DECISION ON PETITION
Filed: August 28, 2006 : TO WITHDRAW
Attorney Docket No. 21058/1206460-US1 : FROM RECORD
:

This is a decision on the Request to Withdraw as attorney or agent of record under 37 C.F.R. § 1.36(b), filed July 13, 2009.

The request is **DISMISSED** as moot.

A review of the file record indicates that the power of attorney to Client 21058 C/O Darby & Darby, PC has been revoked by the assignee of the patent application on August 20, 2009. Accordingly, the request to withdraw under 37 C.F.R. § 1.36(b) is moot.

All future communications from the Office will continue to be directed to the below-listed address until otherwise notified by applicant.

Telephone inquires concerning this decision should be directed to undersigned at 571-272-1642. All other inquiries concerning the examination and status of this application should be directed to the Technology Center.

/AMW/
April M. Wise
Petitions Examiner
Office of Petitions

cc: INTEL CORPORATION
2200 MISSION COLLEGE BLVD.
SANTA CLARA, CA 95054

UNITED STATES PATENT AND TRADEMARK OFFICE

COMMISSIONER FOR PATENTS
UNITED STATES PATENT AND TRADEMARK OFFICE
P.O. BOX 1450
ALEXANDRIA, VA 22313-1450
www.uspto.gov

DELPHI TECHNOLOGIES, INC.
M/C 480-410-202
PO BOX 5052
TROY, MI 48007

COPY MAILED

AUG 14 2006

OFFICE OF PETITIONS

In re Application of :
Loevenbruck : DECISION NOTING JOINDER
Application No. 11/414,621 : OF INVENTOR AND PETITION
Filed: April 28, 2006 : UNDER 37 CFR 1.47(b) MOOT
Atty. Dkt. No.: DP-313317 :

This decision is in response to the petition under 37 CFR 1.47(b), filed May 30, 2006 and supplemented June 6, 2006.

In view of the joinder of the inventor, further consideration under 37 CFR 1.47(b) is not necessary and the petition is considered to be moot. This application does not have any Rule 1.47(b) status and no such status should appear on the file wrapper. This application need not be returned to this Office for further consideration under 37 CFR 1.47(b).

This application is being forwarded to the Office of Initial Patent Examination for further processing.

Telephone inquiries regarding this decision should be directed to the undersigned at (571) 272-3205.

Alesia M. Brown
Petitions Attorney
Office of Petitions

UNITED STATES PATENT AND TRADEMARK OFFICE

Commissioner for Patents
United States Patent and Trademark Office
P.O. Box 1450
Alexandria, VA 22313-1450
www.uspto.gov

GLEN E. SCHUMANN
C/O MOSS & BARNETT
90 SOUTH SEVENTH STREET
4800 WELLS FARGO CENTER
MINNEAPOLIS, MN 55402-4129

COPY MAILED

OCT 31 2006

OFFICE OF PETITIONS

In re Application of :
Beck :
Application No. 11/414,636 : ON PETITION
Filed: April 28, 2006 :
Attorney Dck't. No. N/a :

This is a decision on the communication filed on behalf of joint inventor Beck on July 6, 2006, which is being treated as a petition under 37 CFR 1.183 and MPEP 402.10 for appointment of a separate power of attorney for Beck.

The petition is **granted**.

The above-identified application as filed relied upon a copy of an oath or declaration from a prior application. However, as there was no power of attorney or denotation of a correspondence address by the named inventors, the correspondence address previouslt used by the USPTO was that given in the transmittal latter, and such is consistent moreover with that given in the ADS, which was that associated with customer no. 25,764. See 37 CFR 1.33(a).

Beck points to the fact that he has never assigned his rights herein or in any prior application and due to business differences with the party filing the series of cases, wishes separate representation, and has himself, until now appointed a representative. Beck, however, creates an ambiguity in appointing 3 counsel (including Mr. Glenn Schumann), as well as those representatives associated with customer no. 49,106 as his representatives. However, according to USPTO records, only Mr. Glenn Schumann is named as associated with customer number 49,106. The ambiguity will be resolved by appointment by way of the customer number, which is also a mechanism for specifying a correspondence address. This also means that the correspondence address for this application is necessarily being changed to that of the first registered representative to be appointed by any named inventor, as this is the first time that any named inventor has specified a correspondence address in any manner. See 37 CFR 1.32(b).

Beck's request for separate representation by counsel is granted under the provisions of 37 CFR 1.183 and MPEP 402.10. Inspection of the record reveals that except for Beck, non of Messrs. Allen, Grant, Milton, and Weiss have appointed a registered representative. **Messrs. Allen, Grant, Milton, and Weiss are each advised that pursuant to 37 CFR 1.33(b)(4) each pro se inventor must sign each and every paper filed with the USPTO in this application**. In accordance with MPEP 402.10 and 37 CFR 1.183, the requested appointment of counsel associated with customer No. 49,106 to represent Mr. Beck is **granted** as of the mail date of this decision.

In order to assure that all interests are properly and effectively represented, all further correspondence to the United States Patent and Trademark Office (USPTO) in this application--or resultant patent-- must be signed **both** by counsel associated with customer no. 49,106 for Beck **AND each** of Messrs. **Allen, Grant, Milton, and Weiss**. See MPEP 402.10:

> The acceptance of such papers by petition under 37 CFR 1.183 will result in more than one attorney, agent, applicant, or owner prosecuting the application at the same time. Therefore, each of these parties must sign all subsequent replies submitted to the Office. See In re Goldstein, 16 USPQ2d 1963 (Dep. Assist. Comm'r Pat. 1988).

It should be noted that **Allen, Grant, Milton, and Weiss** may also present a petition under 37 CFR 1.183 and MPEP 402.10 for their own representative.

Mr Schumann will also be responsible for coordinating all replies or submissions to the USPTO. See MPEP 402.10. *Any person signing subsequent papers must indicate whom he or she represents.* It should be noted that the USPTO does not have the ability to recognize more than one correspondence address at a time for a given application. **All parties are reminded that dual correspondence is not permitted, and will not be undertaken by the USPTO. Nevertheless, on a one time basis, as a courtesy, all relevant parties are being copied with this decision.**

This application is being referred to OIPE.

Telephone inquiries relative to this decision should be directed to the undersigned at (571) 272-3217.

Brian Hearn
Petitions Examiner

cc:

FAEGRE & BENSON LLP
PATENT DOCKETING
2200 WELLS FARGO CENTER
90 SOUTH SEVENTH STREET
MINNEAPOLIS MN 55402

cc:
MOSS & BARNETT
4800 WELLS FARGO CENTER
90 SOUTH SEENTH STREET
MINNEAPOLIS, MN 55402

UNITED STATES PATENT AND TRADEMARK OFFICE

Commissioner for Patents
United States Patent and Trademark Office
P.O. Box 1450
Alexandria, VA 22313-1450
www.uspto.gov
DNW Mar-09

GLEN E. SCHUMANN
C/O MOSS & BARNETT
90 SOUTH SEVENTH STREET
4800 WELLS FARGO CENTER
MINNEAPOLIS MN 55402-4129

MAILED

MAR 13 2009

OFFICE OF PETITIONS

In re Application of :
Beck et al. :
Application Number: 11/414636 : DECISION ON PETITION
Filed: 10/05/2006 :
Attorney Docket No. 47358.3 :

This is a decision in reference to the "PETITION UNDER 37 C.F.R. 1.183 REQUEST FOR APPOINTMENT OF A SEPARATE POWER OF ATTORNEY FOR LESS THAN ALL THE NAMED INVENTORS," filed on behalf of joint inventors Allen, Grant, Milton, and Weiss on November 10, 2006. This is also a decision in response to the "RESPONSE TO SYNGENTA'S RULE 183 PETITION," filed on December 20, 2006, on behalf of joint inventor Beck. This is also a decision in reference to the petition under 37 CFR 1.57(a) filed on October 5, 2006.

The petition under 37 CFR 1.183 for appointment of a separate power of attorney for inventor's Allen, Grant, Milton, and Weiss is **GRANTED** to the extent indicated.

The petition filed on behalf of joint inventor Beck is **DISMISSED**.

The petition under 37 CFR 1.57(a) is **DISMISSED**.

Petitioners, inventors Allen, Grant, Milton, and Weiss (hereinafter Allen et al.) request that a power of attorney to the attorneys and agents associated with Customer No. 022847 be entered with respect to the above-referenced inventors.

In accordance with the decision on petition mailed on October 31, 2006, by which the Office accepted appointment of a separate power of attorney on behalf of joint inventor Beck, the other applicants were permitted to file a power of attorney on their behalf. As such, in accordance with MPEP 402.10, the power of attorney is accepted with respect to inventors Allen et al.

Receipt is also acknowledged of the change of correspondence address submitted by the representatives appointed by inventors Allen et al. on November 10, 2006, with the power of attorney.

37 CFR 1.33(a)(2) states that if a § 1.63 oath or declaration has been filed, or is filed concurrent with the filing of an application, by any of the inventors, the correspondence address may be changed by the parties set forth in paragraph (b) of this section, except for paragraph (b)(2).

37 CFR 1.183 states that in an extraordinary situation, when justice requires, any requirement of the regulations in this part which is not a requirement of the statutes may be suspended or waived by the Director or the Director's designee, *sua sponte*, or on petition of the interested party, subject to such other requirements as may be imposed. Any petition under this section must be accompanied by the petition fee set forth in § 1.17(f).

The decision mailed on October 31, 2006, stated, in pertinent part:

> The above-identified application as filed relied upon a copy of an oath or declaration from a prior application. However, as there was no power of attorney or denotation of a correspondence address by the named inventors, the correspondence address previously used by the USPTO was that given in the transmittal latter, and such is consistent moreover with that given in the ADS, which was that associated with customer no. 25,764. See 37 CFR 1.33(a).
>
> Beck points to the fact that he has never assigned his rights herein or in any prior application and due to business differences with the party filing the series of cases, wishes separate representation, and has himself, until now appointed a representative. Beck, however, creates an ambiguity in appointing 3 counsel (including Mr. Glenn Schumann), as well as those representatives associated with customer no. 49,106 as his representatives. However, according to USPTO records, only Mr. Glenn Schumann is named as associated with customer number 49,106. The ambiguity will be resolved by appointment by way of the customer number, which is also a mechanism for specifying a correspondence address. This also means that the correspondence address for this application is

> necessarily being changed to that of the first registered representative to be appointed by any named inventor, as this is the first time that any named inventor has specified a correspondence address in any manner. See 37 CFR 1.32(b).

In this regard, the correspondence address recognized by the Office was determined based on the showing of record at the time the application was filed. Petitioners Allen et al. and their representative have not shown the existence of an extraordinary circumstance where justice requires waiver of 37 CFR 1.33(a)(2) such that the correspondence address may be changed by less than all of the inventors. Moreover, petitioners have not shown that accepting this change of correspondence address agreed to only by Allen et al. would not prejudice the rights of Beck. Accordingly, the request to change the correspondence address is **dismissed**.

With regard to inventor Beck's "RESPONSE TO SYNGENTA'S RULE 183 PETITION," it is noted that petitioner Beck states that "Beck would appear to be the sole inventor of the pending claims." In this regard, petitioners are reminded that the USPTO is not proper forum for resolving disputes between inventors or owners.

Lastly, the petition under 37 CFR 1.57(a) is dismissed because it is not properly signed. The petition filed under 37 CFR 1.183 on July 6, 2006, prior to the filing of the petition under 37 CFR 1.57(a), requested that the Office accept a power of attorney signed by less than all of the inventors, and require papers to be signed by all of the inventors. Said petition under 37 CFR 1.183 has been granted. Accordingly, a properly signed Rule 1.57(a) petition, signed on behalf of all of the inventors by their representatives, must be filed.

The petition fee has been received, and no additional fee is due.

As stated previously, any person signing subsequent papers must indicate whom he or she represents. It should be noted that the USPTO does not have the ability to recognize more than one correspondence address at a time for a given application. **All parties are reminded that dual correspondence is not permitted, and will not be undertaken by the USPTO. Nevertheless, on a one-time basis, as a courtesy, all relevant parties are being copied with this decision.**

Any request for reconsideration should be filed within **TWO (2) MONTHS** of the date of this decision in order to be considered timely. This time period may not be extended pursuant to 37 CFR 1.136.

Further correspondence with respect to this matter should be addressed as follows:

By mail: Mail Stop Petition
Commissioner for Patents
P.O. Box 1450
Alexandria, VA 22313-1450

By FAX: (571) 273-8300
Attn: Office of Petitions

By hand: Customer Service Window
Mail Stop Petition
Randolph Building
401 Dulany Street
Alexandria, VA 22314

Telephone inquiries specific to this decision should be directed to Senior Petitions Attorney Douglas I. Wood at 571.272.3231.

Anthony Knight
Supervisor
Office of Petitions

Cc:

FAEGRE & BENSON LLP
PATENT DOCKETING
2200 WELLS FARGO CENTER
90 SOUTH SEVENTH ST
MINNEAPOLIS MN 55402

UNITED STATES PATENT AND TRADEMARK OFFICE

Commissioner for Patents
United States Patent and Trademark Office
P.O. Box 1450
Alexandria, VA 22313-1450
www.uspto.gov

JJGJR.: 12-07

Paper No: __

LEE, HONG, DEGERMAN,
KANG & SCHMADEKA
660 S. FIGUEROA STREET
SUITE 2300
LOS ANGELES CA 90017

COPY MAILED

DEC 28 2007

OFFICE OF PETITIONS

In re Application of
Lee, et al.
Application No. 11/414,640
Filed: 27 April, 2006
Attorney Docket No. 2060-3393

DECISION ON PETITION

This is a decision on the petition filed on 18 July and again 19 July, 2006, and considered under 37 C.F.R. §1.53.

The Office regrets the delay in addressing the matter—the petition was presented to the attorneys in the Office of Petitions only at this writing.

For the reasons set forth below, the petition under 37 C.F.R. §1.53 is **GRANTED**.

BACKGROUND

The instant application was deposited on 27 April, 2006

On 25 May, 2006, the Office of Initial Patent Examination (OIPE) mailed a Notice of Omitted Items (to wit: "Fig. 2" as described in the specification), and thus, the application had been accorded a filing date without that figure.

OIPE indicated that Petitioner might:

- contend via petition that Fig. 2, as described in the specification, had been submitted on deposit and so evidence that condition with the proper supporting documentation (i.e., a date stamped receipt card (see: MPEP §503)) along with a copy of the specification; or

- submit Fig. 2, as described in the specification, and accept the date of submission as the filing date.

OIPE set a two- (2-) month period for reply.

On 18 and 19 July, 2006, Petitioner submitted the instant petition, including therewith, *inter alia*, what is averred to be a true copy of Fig. 2, as described in the specification, along with a copy of Petitioner's date-stamped receipt card.

ANALYSIS

A search of the official file reveals that:

- on 27 April, 2006, Petitioner deposited the instant application;

- the Office record reflects that Fig. 2, as described in the specification was missing upon deposit.

- the date-stamped ("042706") receipt card evidences—in pertinent part–the following:

* * *

The following due on 4-7-06 in the U.S. Patent & Trademark Office was received in the Patent & Trademark Office on the date stamped hereon::

***

Drawings # of Sheets 22 (Emphasis supplied)

* * *

Because Petitioner's receipt card adequately itemized on the receipt card the contents of the application as to the pages deposited, it is concluded that the application, including Fig. 2, as described in the specification (description, claims, abstract), was deposited with the Office on 27 April, 2006, and Fig. 2, as described in the specification, subsequently was misplaced in the Office.

Accordingly, the application, including Fig. 2, as described in the specification, is entitled to a filing date of 27 April, 2006.

The Notice mailed on 25 May, 2006, was sent in error and is hereby **vacated** to the extent that it stated that the application was filed omitting Fig. 2, as described in the specification.

CONCLUSION

The petition is **granted**; the petition fee waived and is credited to Deposit Account 50-2290.

This application is released to OIPE for further processing with a filing date of 27 April, 2006, for the entire application including Fig. 2, as described in the specification, with pages 1 – 40 of the specification (description, claims, abstract), and 22 sheets of drawings (Figs. 1 – 10F), as described in the specification, using:

- **pages 1 – 40 of the specification (description, claims, abstract) and 10 sheets of drawings (Figs. 1, 3 – 10F) deposited on 27 April, 2006; and**
- **Fig. 2 , as described in the specification deposited on 18 and 19 July, 2006; and further**

with direction to OIPE to correct Office records and provide to Petitioner a corrected filing receipt setting forth a filing date of 27 April, 2006, and reflecting therein that 40 pages of specification (description, claims, abstract) and 22 sheets of drawings (Figs. 1 – 10F) were present on filing.

While telephone inquiries regarding this decision may be directed to the undersigned at (571) 272-3214, it is noted that all practice before the Office is in writing (see: 37 C.F.R. §1.2[1]) and the proper authority for action on any matter in this regard are the statutes (35 U.S.C.), regulations (37 C.F.R.) and the commentary on policy (MPEP). Therefore, no telephone discussion may be controlling or considered authority for Petitioner's/Caller's action(s).

John J. Gillon, Jr.
Senior Attorney
Office of Petitions

[1] The regulations at 37 C.F.R. §1.2 provide:

§1.2 Business to be transacted in writing.

All business with the Patent and Trademark Office should be transacted in writing. The personal attendance of applicants or their attorneys or agents at the Patent and Trademark Office is unnecessary. The action of the Patent and Trademark Office will be based exclusively on the written record in the Office. No attention will be paid to any alleged oral promise, stipulation, or understanding in relation to which there is disagreement or doubt.

UNITED STATES PATENT AND TRADEMARK OFFICE

Commissioner for Patents
United States Patent and Trademark Office
P.O. Box 1450
Alexandria, VA 22313-1450
www.uspto.gov

SPANSION LLC C/O MURABITO , HAO & BARNES LLP
TWO NORTH MARKET STREET
THRID FLOOR
SAN JOSE CA 95113

COPY MAILED

DEC 0 9 2009

OFFICE OF PETITIONS

In re Application of	:	
Hiroshi Murai	:	
Application No. 11/414,647	:	DECISION ON PETITION
Filed: April 27, 2006	:	
Attorney Docket No. SPSN-AF01694	:	

This is a decision on the petition under the unintentional provisions of 37 CFR 1.137(b), filed October 13, 2009, to revive the above-identified application.

The petition is **GRANTED**.

This application became abandoned for failure to timely pay the issue and publication fees, as required by the Notice of Allowance and Fee(s) Due mailed March 10, 2009 and to submit a substitute Oath/Declaration as required by the Notice of Allowability mailed March 10, 2009. All fees and submissions were due on or before June 10, 2009. Accordingly, the date of abandonment of this application is June 11, 2009. A Notice of Abandonment was mailed July 7, 2009.

The petition satisfies the requirements of 37 CFR 1.137(b) in that petitioner has supplied (1) the reply in the form of the payment of the Issue fee of $1,510.00, the Publication fee of $300.00, and submission of a substitute Oath/Declaration; (2) the petition fee of $1,620.00; and (3) a proper statement of unintentional delay.

It is not apparent whether the statement of unintentional delay was signed by a person who would have been in a position of knowing that the **entire** delay in filing the required reply from the due date for the reply until the filing of a grantable petition pursuant to 37 CFR 1.137(b) was unintentional. Nevertheless, in accordance with 37 CFR 10.18, the statement is accepted as constituting a certification of unintentional delay. However, in the event that petitioner has no knowledge that the delay was unintentional, petitioner must make such an inquiry to ascertain that, in fact, the delay was unintentional. If petitioner discovers that the delay was intentional, petitioner must notify the Office.

Telephone inquiries concerning this decision should be directed to the undersigned at (571) 272-7751.

This application is being referred to the Office of Data Management for processing into a patent and review of the substitute Oath/Declaration submitted on October 13, 2009.

Joan Olszewski
Petitions Examiner
Office of Petitions

UNITED STATES PATENT AND TRADEMARK OFFICE

Commissioner for Patents
United States Patent and Trademark Office
P.O. Box 1450
Alexandria, VA 22313-1450
www.uspto.gov

ARTHUR JACOB
25 EAST SALEM STREET
P.O. BOX 686
HACKENSACK NJ 07601

COPY MAILED
DEC 14 2006
OFFICE OF PETITIONS

In re Application of :
WEHMEYER, et al. :
Application No. 11/414,654 : DECISION ON PETITION
Filed: April 28, 2006 : TO MAKE SPECIAL UNDER
Attorney Docket No. A-05.48 : 37 CFR 1.102(c)(1)
:

This is a decision on the petition under 37 CFR 1.102(c)(1), filed April 28, 2006, to make the above-identified application special based on applicant's age as set forth in M.P.E.P. § 708.02, Section IV.

The petition is **GRANTED**.

A grantable petition to make an application special under 37 CFR 1.102(c)(1) and MPEP § 708.02, Section IV: Applicant's Age, must be accompanied by evidence showing that at least one of the applicants is 65 years of age, or more, such as a birth certificate or a statement by applicant. No fee is required.

The instant petition includes an affidavit from inventor Klaus W. Woltmann, attesting to his age. Accordingly, the above-identified application has been accorded "special" status.

Telephone inquiries concerning this decision should be directed to the undersigned at 571-272-7253.

All other inquiries concerning either the examination or status of the application should be directed to the Technology Center.

The application is being forwarded to the Technology Center Art Unit 1724 for action on the merits commensurate with this decision.

Monica A. Graves
Petitions Examiner
Office of Petitions

UNITED STATES PATENT AND TRADEMARK OFFICE

Commissioner for Patents
United States Patent and Trademark Office
P.O. Box 1450
Alexandria, VA 22313-1450
www.uspto.gov

GREENBERG TRAURIG LLP (LA)
2450 COLORADO AVENUE, SUITE 400E
INTELLECTUAL PROPERTY DEPARTMENT
SANTA MONICA CA 90404

COPY MAILED

FEB 01 2010

In re Application of :
Simon Maddox :
Application No. 11/414,663 : DECISION ON PETITION
Filed: April 27, 2006 : TO WITHDRAW
Attorney Docket No. 91350-011500 : FROM RECORD
:

This is a decision on the Request to Withdraw as attorney or agent of record under 37 C.F.R. § 1.36(b), filed December 10, 2009.

The request is **NOT APPROVED.**

The Office will no longer accept address changes to a new practitioner or law firm filed with a Request, absent the filing of a power of attorney to the new representative. The Office will either change the correspondence address of record to the most current address information provided for the assignee of the entire interest who properly became of record under 37 CFR 3.71 or, if no assignee of the entire interest has properly been made of record under 37 CFR 3.71, the most current address information provided for the first named inventor. This change has been made in order to avoid subsequent correspondence being directed to an incorrect address or to a practitioner who has not been appointed as practitioner of record by the applicant.

Accordingly, the request to withdraw from record cannot be approved because the request to change the correspondence is not that of: (1) the first named inventor; or (2) an assignee of the entire interest under 37 C.F.R 3.71, who has properly intervened.

If an assignee has intervened in this application, then a Statement under 37 CFR 3.73(b) with a proper chain of title, or a copy of the actual assignment filed must be submitted with any renewed request to update the application file.

All future communications from the Office will continue to be directed to the above-identified address until otherwise properly notified.

Telephone inquiries concerning this decision should be directed to the undersigned at 571-272-4618.

/Kimberly Inabinet/

Kimberly Inabinet
Petitions Examiner
Office of Petitions

UNITED STATES PATENT AND TRADEMARK OFFICE

Commissioner for Patents
United States Patent and Trademark Office
P.O. Box 1450
Alexandria, VA 22313-1450
www.uspto.gov

GREENBERG TRAURIG LLP (LA)
2450 COLORADO AVENUE, SUITE 400E
INTELLECTUAL PROPERTY DEPARTMENT
SANTA MONICA CA 90404

MAILED

MAR 29 2010

OFFICE OF PETITIONS

In re Application of
Simon Maddox
Application No. 11/414,663
Filed: April 27, 2006
Attorney Docket No. 91350-011500

DECISION ON PETITION
TO WITHDRAW
FROM RECORD

This is a decision on the renewed Request to Withdraw as attorney or agent of record under 37 C.F.R. § 1.36(b), filed February 26, 2010.

The request is **APPROVED**.

A grantable request to withdraw as attorney/agent of record must be signed by every attorney/agent seeking to withdraw or contain a clear indication that one attorney is signing on behalf of another/others. A request to withdraw will not be approved unless at least 30 (thirty) days would remain between the date of approval and the later of the expiration date of a time to file a response or the expiration date of the maximum time period which can be extended under 37 C.F.R. § 1.136(a).

The request was signed by Christopher Darrow on behalf of all attorneys/agents associated with customer number 33717. All attorneys/agents associated with customer number 33717 have been withdrawn.

Applicant is reminded that there is no attorney of record at this time.

The correspondence address has been changed and is copied below.

Telephone inquiries concerning this decision should be directed to Kimberly Inabinet at 571-272-4618.

/Kimberly Inabinet/

Kimberly Inabinet
Petitions Examiner
Office of Petitions

cc: Office-Shadow Limited
Unit 2, South Lodge Court, Ironsbottom
Reigate, Surrey RH2 5QG
UNITED KINGDOM

UNITED STATES PATENT AND TRADEMARK OFFICE

UNITED STATES DEPARTMENT OF COMMERCE
United States Patent and Trademark Office
Address: COMMISSIONER FOR PATENTS
P.O. Box 1450
Alexandria, Virginia 22313-1450
www.uspto.gov

APPLICATION NUMBER	FILING OR 371(C) DATE	FIRST NAMED APPLICANT	ATTY. DOCKET NO./TITLE
11/414,663	04/27/2006	Simon Maddox	91350-011500

CONFIRMATION NO. 2553

POWER OF ATTORNEY NOTICE

33717
GREENBERG TRAURIG LLP (LA)
2450 COLORADO AVENUE, SUITE 400E
INTELLECTUAL PROPERTY DEPARTMENT
SANTA MONICA, CA 90404

Date Mailed: 03/29/2010

NOTICE REGARDING CHANGE OF POWER OF ATTORNEY

This is in response to the Power of Attorney filed 02/26/2010.

- The withdrawal as attorney in this application has been accepted. Future correspondence will be mailed to the new address of record. 37 CFR 1.33.

/kainabinet/

Office of Data Management, Application Assistance Unit (571) 272-4000, or (571) 272-4200, or 1-888-786-0101

UNITED STATES PATENT AND TRADEMARK OFFICE

Commissioner for Patents
United States Patent and Trademark Office
P.O. Box 1450
Alexandria, VA 22313-1450
www.uspto.gov

ARTHUR J. HANSMANN
222 WHITE SAND LANE
RACINE, WI 53402

MAILED

NOV 09 2009

OFFICE OF PETITIONS

In re Application of :
Hua Gao :
Application No. 11/414,680 : DECISION ON PETITION
Filed: May 01, 2006 :
Attorney Docket No. 1010 :

This is a decision on the petition, filed June 29, 2009, which is being treated as a petition under 37 CFR 1.181 (no fee) requesting withdrawal of the holding of abandonment in the above-identified application.

The petition is **DISMISSED**.

Any request for reconsideration of this decision should be filed within two (2) months from the mail date of this decision. *Note* 37 CFR 1.181(f). The request for reconsideration should include a cover letter and be entitled as a "Renewed Petition under 37 CFR 1.181 to Withdraw the Holding of Abandonment."

This application was held abandoned for failure to reply to the non-final Office action mailed November 25, 2008, which set a three (3) month shortened statutory period for reply. A Notice of Abandonment was mailed on June 19, 2009.

Petitioner states that a reply dated January 13, 2009 was timely filed. To support this assertion, petitioner has submitted a copy of a return postcard which acknowledges receipt by the U.S. Patent and Trademark Office (USPTO) on January 12, 2009 of, *inter alia,* response to non-final Office action. A copy of the previously submitted reply accompanies the petition.

The stamped post card and response to the non-final Office action is acknowledged as having been received in the USPTO on January 13, 2009 is not of record in the application file and has not to date been located. The stamp on the submitted copy of the return postcard is for a filing in another application. There is not any indication that this was a PTO error. Accordingly, it is concluded that the copy of the return postcard is not accepted.

A review of the written record indicates no receipt of the response to the non-final Office action dated January 13, 2009, and, in the absence of any record, there is a strong presumption that the response was not received by the PTO. This presumption may be overcome by a showing that the response to the non-final Office action in fact was submitted. In this regard, the showing required to establish the response to the Office action must consist of the following:

1. a statement from practitioner stating that the reply was not received by the practitioner;

2. a statement from the practitioner attesting to the fact that a search of the file jacket and docket records indicates that the Office action was not received; and

3. a copy of the docket record where the non-received Office action would have been entered had it been received must be attached to and referenced in the practitioner's statement.

See MPEP § 711.03(c) under subheading "Petition to Withdraw Holding of Abandonment Based on Failure to Receive Office Action," and "Withdrawing the Holding of Abandonment When Office Actions Are Not Received," 1156 Official Gazette 53 (November 16, 1993).

The petition fails to satisfy all of the above-stated requirements.

Accordingly, absent the required evidence to establish non-receipt of the Office action of January 13, 2009, the petition requesting withdrawal of the holding of abandonment cannot be granted at this time.

If petitioner cannot supply the evidence necessary to withdraw the holding of abandonment, or simply does not wish to, petitioner should consider filing a petition under 37 CFR 1.137(b) stating that the delay was unintentional. Public Law 97-247, § 3, 96 Stat. 317 (1982), which revised patent and trademark fees, amended 35 U.S.C. § 41(a)(7) to provide for the revival of an "unintentionally" abandoned application without a showing that the delay in prosecution or in late payment of the issue fee was "unavoidable." This amendment to 35 U.S.C. § 41(a)(7) has been implemented in 37 CFR 1.137(b). An "unintentional" petition under 37 CFR 1.137(b) must be accompanied by the $810 petition fee.

The filing of a petition under 37 CFR 1.137(b) cannot be intentionally delayed and therefore must be filed promptly. A person seeking revival due to unintentional delay cannot make a statement that the delay was unintentional unless the entire delay, including the date it was discovered that the application was abandoned until the filing of the petition to revive under 37 CFR 1.137(b), was unintentional. A statement that the delay was unintentional is not appropriate if petitioner intentionally delayed the filing of a petition for revival under 37 CFR 1.137(b).

Further correspondence with respect to this matter should be addressed as follows:

By Mail: Mail Stop PETITION

Commissioner for Patents
P. O. Box 1450
Alexandria, VA 22313-1450

By hand: U. S. Patent and Trademark Office
Customer Service Window, Mail Stop Petitions
Randolph Building
401 Dulany Street
Alexandria, VA 22314

By facsimile: **(571) 273-8300**
Attn: Office of Petitions

Telephone inquiries concerning this decision should be directed to Ella Colbert at (571) 272-6051, or in her absence, the undersigned at (571) 272-7099.

The application is being referred to Technology Center AU 4177 for appropriate action in the in the normal course of business on the reply received with petition.

David Bucci
Petitions Examiner
Office of Petitions

UNITED STATES PATENT AND TRADEMARK OFFICE

Commissioner for Patents
United States Patent and Trademark Office
P.O. Box 1450
Alexandria, VA 22313-1450
www.uspto.gov

COPY MAILED

DEC 0 9 2009

OFFICE OF PETITIONS

ARTHUR J. HANSMANN
222 WHITE SAND LANE
RACINE WI 53402

In re Application of	:	
Hua GAO	:	
Application No. 11/414,680	:	ON PETITION
Filed: May 1, 2006	:	
Attorney Docket No. 1010	:	

CORRECTED DECISION

This is a corrected decision on the petition under 37 CFR 1.181, filed June 29, 2009, requesting withdrawal of the Notice of Abandonment mailed June 19, 2009.

The petition is **GRANTED**.

Petitioner requests the Notice of Abandonment mailed June 19, 2009 for failure to respond to the Office action mailed November 25, 2008 be withdrawn as petitioner timely filed a response. As shown by the itemized copy of the post card receipt date stamped January 13, 2009 a reply was timely received by the USPTO, and thereafter misplaced.

Telephone inquiries concerning this decision should be directed to David A. Bucci at (571) 272-7099.

The application file is being referred to Technology Center AU 3726 for appropriate action on the concurrently filed amendment.

David Bucci
Petitions Examiner
Office of Petitions

UNITED STATES PATENT AND TRADEMARK OFFICE

Commissioner for Patents
United States Patent and Trademark Office
P.O. Box 1450
Alexandria, VA 22313-1450
www.uspto.gov

MORRISON & FOERSTER LLP
1650 TYSONS BOULEVARD
SUITE 400
MCLEAN, VA 22102

COPY MAILED

AUG 2 4 2007

OFFICE OF PETITIONS

In re Application of :
Xing Su :
Application No. 11/414,681 : DECISION ON PETITION
Filed: April 28, 2006 : TO WITHDRAW
Attorney Docket No. 070702007510 : FROM RECORD
:

This is a decision on the Request to Withdraw as attorney or agent of record under 37 C.F.R. § 1.36(b) filed March 23, 2007.

The request is **DISMISSED** as moot.

A review of the file record indicates that the power of attorney to Morrison & Foerster, LLP has been revoked by the assignee of the patent application on May 15, 2007. Accordingly, the request to withdraw under 37 C.F.R. § 1.36(b) is moot.

All future communications from the Office will continue to be directed to the below-listed address until otherwise notified by applicant.

Telephone inquires concerning this decision should be directed to undersigned at 571-272-1642.

April M. Wise
Petitions Examiner
Office of Petitions

cc: RAJ S. DAVE', PHD
DARBY & DARBY, PC
1500 K STREET NW
SUITE 250
WASHINGTON, DC 20005-1714

UNITED STATES PATENT AND TRADEMARK OFFICE

Commissioner for Patents
United States Patent and Trademark Office
P.O. Box 1450
Alexandria, VA 22313-1450
www.uspto.gov
OIW Apr-07

WOODARD, EMHARDT, MORIARTY, MCNETT & HENRY LLP
111 MONUMENT CIRCLE, SUITE 3700
INDIANAPOLIS IN 46204-5137

COPY MAILED

APR 0 6 2007

OFFICE OF PETITIONS

In re Application of	:
Patel, Obermiller, Fette, and Graham	: DECISION REFUSING STATUS
Application No. 11/414,682	: UNDER 37 CFR 1.47(a)
Filed: 04/28/2006	:
Atty Docket No. 3006-1855	:

This is in response to the petition under 37 CFR 1.47(a) filed on 28 December, 2006.

The petition is **DISMISSED**.

Rule 47 applicant is given TWO MONTHS from the mailing date of this decision to reply, correcting the below-noted deficiencies. Any reply should be entitled "Request for Reconsideration of Petition Under 37 CFR 1.47(a)," and should only address the deficiencies noted below, except that the reply may include an oath or declaration executed by the non-signing inventor. **FAILURE TO RESPOND WILL RESULT IN ABANDONMENT OF THE APPLICATION.** Extensions of time may be obtained in accordance with 37 CFR 1.136(a).

The above-identified application was filed on 28 April, 2006, without an executed oath or declaration. Accordingly, on 24 May, 2006, a Notice to File Missing Parts of Nonprovisional Application was mailed, requiring an executed oath or declaration and a surcharge for its late filing. In response, on 28 December, 2006 (certificate of mailing date 26 December, 2006), the present petition was filed, accompanied by a five (5) month extension of time, the petition fee, surcharge, and a declaration naming 30 September, 2005, with a declaration naming Umesh H. Patel, F. Joseph Obermiller, Clay D. Fette, and Matthew R.

Graham, signed on by all inventors except joint inventor Fette on behalf of themselves and non-signing joint inventor Fette.

Petitioners assert that a copy of the application papers were sent to Fette, but that he has failed to sign and return the declaration.

A grantable petition under 37 CFR 1.47(a) requires:

(1) proof that the non-signing inventor cannot be reached or located, notwithstanding diligent effort, or refuses to sign the oath or declaration after having been presented with the application papers (specification, claims and drawings);

(2) an acceptable oath or declaration in compliance with 35 U.S.C. §§ 115 and 116;

(3) the petition fee;

(4) a surcharge of $130 or $65 (small entity) if the petition and/or declaration is not filed at the time of filing the application, and

(5) a statement of the last known address of the non-signing inventor.

The petition lacks item (2).

With regards to item (2), it is noted that residence city and mailing address of non-signing inventor Fette appear to have been crossed out on the copy of the declaration signed by joint inventor Graham. It is unclear why this change was made and who made it.

Furthermore, the declaration contains is defective in that it contains non initialed and/or non-dated alterations.[1] A new oath or declaration in compliance with 37 CFR 1.63 and 1.67, signed by the inventor to whom the error or deficiency relates is required.[2] As all of the signing inventors must sign on behalf of a non-signing inventor under 37 CFR 1.47(a) a new declaration, signed by all of the signing inventors on behalf of themselves and the non-signing inventor, must be filed with a renewed petition.[3]

Further correspondence with respect to this matter should be addressed as follows:

By mail: Mail Stop Petition

---

[1] See 37 CFR 1.52(c).

[2] 37 CFR 1.67(a)(2).

[3] See MPEP 409.03(A).

Commissioner for Patents
P.O. Box 1450
Alexandria, VA 22313-1450

By FAX: (571) 273-8300
Attn: Office of Petitions

By hand: Customer Service Window
Mail Stop Petition
Randolph Building
401 Dulany Street
Alexandria, VA 22314

Telephone inquiries related to this decision should be directed to the undersigned at 571-272-3231.

Douglas I. Wood
Senior Petitions Attorney
Office of Petitions

UNITED STATES PATENT AND TRADEMARK OFFICE

Commissioner for Patents
United States Patent and Trademark Office
P.O. Box 1450
Alexandria, VA 22313-1450
www.uspto.gov
DIW Aug-07

WOODARD, EMHARDT, MORIARTY, MCNETT & HENRY LLP
111 MONUMENT CIRCLE, SUITE 3700
INDIANAPOLIS IN 46204-5137

COPY MAILED

AUG 0 2 2007

OFFICE OF PETITIONS

In re Application of	:
Patel, Obermiller, Fette, and	: DECISION ACCORDING STATUS
Graham	: UNDER 37 CFR 1.47(a)
Application No. 11/414,682	:
Filed: 04/28/2006	:
Atty Docket No. 3006-1855	:

This is in response to the renewed petition under 37 CFR 1.47(a) filed on 8 June, 2007 (certificate of mailing 6 June, 2007).

The petition is **GRANTED**.

Petitioners have shown that the non-signing inventor, Clay Fette, haa refused to sign the declaration after having been sent a copy of the application papers. Specifically, petitioners have shown that a copy of the application papers were sent to the last known address of the non-signing inventor, but the inventor failed to return an executed declaration naming him as a joint inventor along with Umesh H. Patel, F. Joseph Obermiller, and Matthew R. Graham.

The above-identified application and papers have been reviewed and found in compliance with 37 CFR 1.47(a). This application is hereby accorded Rule 1.47(a) status.

As provided in Rule 1.47(c), this Office will forward notice of this application's filing to the non-signing inventor at the address given in the Declaration. Notice of the filing of this application will also be published in the *Official Gazette*.

The application is referred to Technology Center Art Unit 3738 for examination in due course.

Telephone inquiries related to this decision should be directed to the undersigned at 571-272-3231.

D Wood

Douglas I. Wood
Senior Petitions Attorney
Office of Petitions

UNITED STATES PATENT AND TRADEMARK OFFICE

Commissioner for Patents
United States Patent and Trademark Office
P.O. Box 1450
Alexandria, VA 22313-1450
www.uspto.gov
DIW Aug-07

Clay Fette
12333 Acapulco Drive
Palm Beach Gardens FL 33410

COPY MAILED

AUG 0 2 2007

OFFICE OF PETITIONS

In re Application of
Patel et al.
Application No. 11/414,682
Filed: 28 April, 2006
For: FISTULA GRAFT WITH DEFORMABLE SHEET-FORM MATERIAL

Dear Mr. Fette:

You are named as a joint inventor in the above identified United States patent application, filed under the provisions of 35 U.S.C. 116 (United States Code), and 37 CFR 1.47(a), Rules of Practice in Patent Cases. Should a patent be granted on the application you will be designated therein as a joint inventor.

As a named inventor you are entitled to inspect any paper in the file wrapper of the application, order copies of all or any part thereof (at a prepaid cost per 37 CFR 1.19) or make your position of record in the application. Alternatively, you may arrange to do any of the preceding through a registered patent attorney or agent presenting written authorization from you. If you care to join the application, counsel of record (see below) would presumably assist you. Joining in the application would entail the filing of an appropriate oath or declaration by you pursuant to 37 CFR 1.63.

Telephone inquiries regarding this communication should be directed to the undersigned at 571/272-3231. Requests for information regarding your application should be directed to the File Information Unit at 571-272-3150. Information regarding how to pay for and order a copy of the application, or a specific paper in the application, should be directed to Certification Division at 571-272-3150 or 1-800-972-6382 (outside the Washington D.C. area).

D Wood

Douglas I. Wood
Senior Petitions Attorney
Office of Petitions

WOODARD, EMHART, MORIARTY, MCNETT & HENRY LLP
111 MONUMENT CIRCLE, SUITE 3700
INDIANAPOLIS IN 46204-3700

UNITED STATES PATENT AND TRADEMARK OFFICE

Commissioner for Patents
United States Patent and Trademark Office
P.O. Box 1450
Alexandria, VA 22313-1450
www.uspto.gov

DORSEY & WHITNEY LLP
INTELLECTUAL PROPERTY DEPARTMENT
250 PARK AVENUE
NEW YORK NY 10177

COPY MAILED

OCT 0 2 2006

OFFICE OF PETITIONS

In re Application of :
Cohen :
Application No. 11/414,688 : DECISION ON PETITION
Filed: April 27, 2006 : TO WITHDRAW
Attorney Docket No. 186597/US/2-475494-00329 : FROM RECORD
:

This is a decision on the Request to Withdraw as attorney or agent of record under 37 C.F.R. § 1.36(b), filed July 5, 2006.

The request is **APPROVED**.

A grantable request to withdraw as attorney/agent of record must be signed by every attorney/agent seeking to withdraw or contain a clear indication that one attorney is signing on behalf of another/others. A request to withdraw will not be approved unless at least 30 (thirty) days would remain between the date of approval and the later of the expiration date of a time to file a response or the expiration date of the maximum time period which can be extended under 37 C.F.R. § 1.136(a).

The request was signed by Gary Abelev on behalf of all attorneys of record who are associated with customer No. 30873.

All attorneys/agents associated with the Customer Number 30873 have been withdrawn.

Applicant is reminded that there is no attorney of record at this time.

The correspondence address of record has been changed and the new correspondence address is the address indicated below.

Telephone inquiries concerning this decision should be directed to April Wise at 571-272-1642.

April M. Wise
Petitions Examiner
Office of Petitions

cc: Mr. Wayne Cohen
Managing Director
Bongo Logic Co., Ltd.
44 Convent Road
Silom Bangrak, Bangkok
Thailand 10500

UNITED STATES PATENT AND TRADEMARK OFFICE

UNITED STATES DEPARTMENT OF COMMERCE
United States Patent and Trademark Office
Address: COMMISSIONER FOR PATENTS
P.O. Box 1450
Alexandria, Virginia 22313-1450
www.uspto.gov

APPLICATION NUMBER	FILING OR 371 (c) DATE	FIRST NAMED APPLICANT	ATTY. DOCKET NO./TITLE
11/414,688	04/27/2006	Wayne Cohen	186597/US/2 - 475494-0032

CONFIRMATION NO. 2976

OC000000020633311

OC000000020633311

30873
DORSEY & WHITNEY LLP
INTELLECTUAL PROPERTY DEPARTMENT
250 PARK AVENUE
NEW YORK, NY 10177

Date Mailed: 09/28/2006

NOTICE REGARDING CHANGE OF POWER OF ATTORNEY

This is in response to the Power of Attorney filed 07/05/2006.

- The withdrawal as attorney in this application has been accepted. Future correspondence will be mailed to the new address of record. 37 CFR 1.33.

April M Wise

APRIL M WISE
OP (571) 272-1642

FORMER ATTORNEY/AGENT COPY

UNITED STATES PATENT AND TRADEMARK OFFICE

Commissioner for Patents
United States Patent and Trademark Office
P.O. Box 1450
Alexandria, VA 22313-1450
www.uspto.gov

Paper No.

MAILED

JUN 22 2009

OFFICE OF PETITIONS

CHRISTIE, PARKER & HALE, LLP
PO BOX 7068
PASADENA CA 91109-7068

In re Application of	:	
Paul Yurt et al.	:	DECISION ON PETITION
Application No. 11/414,699	:	PURSUANT TO
Filed: April 28, 2006	:	37 C.F.R. § 1.181(A)
Attorney Docket Number:	:	
57657/A719	:	
Title: AUDIO AND VIDEO	:	
TRANSMISSION AND RECEIVING	:	
SYSTEM		

This is a decision on the petition filed May 26, 2009, pursuant to 37 C.F.R. § 1.181, requesting that the holding of abandonment in the above-identified application be withdrawn.

The above-identified application became abandoned for failure to reply in a timely manner to the non-final Office action, mailed November 25, 2008, which set a shortened statutory period for reply of three months. No response was received, and no extensions of time under the provisions of 37 C.F.R. § 1.136(a) were requested. Accordingly, the above-identified application became abandoned on February 26, 2009. A notice of abandonment was mailed on May 11, 2009.

With the present petition, Petitioner has indicated that extensions of time were still available, and as such, he was in a position to purchase extensions of time.

It is noted that an amendment was filed concurrently with this petition, along with a three-month extension of time.[1] Petitioner's argument has been considered, and it has been deemed to be persuasive.

1 It is noted that May 25, 2009 fell on a federal holiday.

Accordingly, the petition under 37 C.F.R. § 1.181(a) is **GRANTED**. The holding of abandonment is **WITHDRAWN**.

The Technology Center will be notified of this decision. The Technology Center's support staff will notify the Examiner of this decision, so that the amendment that was received with the present petition can be processed.

Petitioner may find it beneficial to view Private PAIR within a fortnight of the present decision to ensure that the withdrawal of the holding of abandonment has been acknowledged by the Technology Center in response to this decision. It is noted that all inquiries with regard to any failure of that change in status should be directed to the Technology Center where that change of status must be effected - **the Office of Petitions cannot effectuate a change of status**.

It is noted that the address listed on the petition differs from the address of record. The application file does not indicate a change of correspondence address has been filed in this case, although the address given on the petition differs from the address of record.

If Petitioner desires to receive future correspondence regarding this application, the change of correspondence address must be submitted. A courtesy copy of this decision will be mailed to Petitioner. However, all future correspondence will be directed to the address of record until such time as appropriate instructions are received to the contrary.

Petitioner will not receive future correspondence related to this application unless Change of Correspondence Address, Patent Form (PTO/SB/122) is submitted for the above-identified application. For Petitioner's convenience, a blank Change of Correspondence Address, Patent Form (PTO/SB/122), may be found here: http://www.uspto.gov/web/forms/sb0122.pdf.

Telephone inquiries regarding *this decision* should be directed to the undersigned at (571) 272-3225.[2]

Paul Shanoski
Senior Attorney
Office of Petitions

cc: Thomas H. Martin
1557 Lake O'Pines Street, NE
Hartville, OH 44632

2 Petitioner will note that all practice before the Office should be in writing, and the action of the Office will be based exclusively on the written record in the Office. See 37 C.F.R. § 1.2. As such, Petitioner is reminded that no telephone discussion may be controlling or considered authority for any further action(s) of Petitioner.

UNITED STATES PATENT AND TRADEMARK OFFICE

COMMISSIONER FOR PATENTS
UNITED STATES PATENT AND TRADEMARK OFFICE
P.O. BOX 1450
ALEXANDRIA, VA 22313-1450
www.uspto.gov

MAILED

APR 27 2010

OFFICE OF PETITIONS

MARTIN & FERRARO, LLP
1557 LAKE O'PINES STREET, NE
HARTVILLE OH 44632

In re Application :
Yurt, et al. :
Application No. 11/414,699 : PATENT TERM ADJUSTMENT
Filed: April 28, 2006 :
Dkt. No.: 147.0001-25000 :

This is in response to the "REQUEST FOR RECONSIDERATION OF PATENT TERM ADJUSTMENT UNDER 37 CFR 1.705," filed January 19, 2010. This matter is being properly treated under 37 CFR 1.705(b).

Applicants submit that the correct patent term adjustment to be indicated on the patent is 390 days, not 480 days as calculated by the Office as of the mailing of the initial determination of patent term adjustment. Applicants also assert that the application will be entitled to additional patent term adjustment upon issuance pursuant to 35 USC 154(b)(1)(B).

The request for reconsideration of patent term adjustment is **GRANTED IN PART TO THE EXTENT INDICATED HEREIN**.

Insofar as the instant application for patent term adjustment asserts future entitlement to patent term adjustment as it relates to the Office's failure to issue the patent within 3 years of the filing date pursuant to 35 USC 154(b)(1)(B), the application for patent term adjustment under 37 CFR 1.705(b) is **DISMISSED as PREMATURE**.

Knowledge of the actual date the patent issues is required to calculate the amount, if any, of additional patent term patentee is entitled to for Office failure to issue the patent within 3 years. See, § 1.702(b). (This is true even where a request for continued examination (RCE) was filed). The computer will not undertake the § 1.702(b) calculation until the actual date of issuance of the patent has been determined. Likewise, the computer will not calculate any further Office delay under § 1.702(a)(4) or applicant delay under § 1.704(c)(10) until the actual date of issuance of the patent has been determined. As such, the Office can not make a determination on the correctness of the patent term adjustment until the patent has issued.

Requesting reconsideration of the patent term adjustment to be indicated on the patent based on the initial determination of patent term adjustment and a projected issuance date of the patent (or even the filing date of the request for continued examination) is premature. Accordingly, it is appropriate to dismiss as premature such a request.

Applicant is advised that they may wait until the time of the issuance of the patent and file a request for reconsideration of the patent term adjustment pursuant to 37 CFR 1.705(d). As the USPTO does not calculate the amount of time earned pursuant to 37 CFR 1.702(b) until the time of the issuance of the patent, the Office will consider any request for reconsideration of the patent term adjustment due to an error in the calculation of 37 CFR 1.702(b) to be timely if the request for reconsideration is filed within two months of the issuance of the patent. However, as to all other bases for contesting the initial determination of patent term adjustment received with the notice of allowance, applicant must timely file an application for patent term adjustment prior to the payment of the issue fee[1].

Any request for reconsideration of the patent term adjustment indicated on the patent must be timely filed within 2 months after issuance pursuant to **37 CFR 1.705(d)** and **must** include payment of the required fee under 37 CFR 1.18(e).

Applicants further assert that the patent term adjustment is subject to additional reduction of 90 days in connection with the reply to May 25, 2009 in response to the non-final Office action mailed November 25, 2008.

A review of the record reveals that the adjustment is subject to further reduction of 90 days pursuant to 37 CFR 1.704(b), as asserted. The period of reduction commenced February 26, 2008, the day after the date that is three months after the date that the non-final Office action was mailed, and ended May 26, 2009, the date that the reply thereto was filed. It is noted that applicants assert that the reply was filed May 25, 2009. However, as the USPTO was closed for business on May 25, 2009, the response is deemed received May 26, 2009. See, 37 CFR 1.6(a)(3).

In view thereof, as of the time of allowance, the application is entitled to a patent term adjustment of 390 days, as argued.

Accordingly, the application for patent term adjustment under 37 CFR 1.705(b) is **GRANTED TO THE EXTENT INDICATED HEREIN**.

The Office acknowledges submission of the $200.00 fee set forth in 37 CFR 1.18(e). No additional fees are required pursuant to 37 CFR 1.705(b).

---

[1] For example, if applicant disputes both the calculation of patent term adjustment under 37 CFR 1.702(a)(1) for Office failure to mail a first Office action or notice of allowance not later than fourteen months after the date on which the application was filed and under 37 CFR 1.702(b) for Office failure to issue a patent within three years of the actual filing date of the application, then applicant must still timely file an application for patent term adjustment prior to the payment of the issue fee to contest the calculation of Office delay in issuing a first Office action or notice of allowance. See 37 CFR 1.705(b) and 35 U.S.C. 154(b)(3)(B). A dispute as to the calculation of the §1.702(a)(1) period raised on request for reconsideration of patent term adjustment under 37 CFR 1.705(d) will be dismissed as untimely filed.

The Office of Data Management has been advised of this decision. This application is being referred to the Office of Data Management for issuance of the patent.

Telephone inquiries specific to this decision should be directed to the undersigned at (571) 272-3205.

/ALESIA M. BROWN/

Alesia M. Brown
Petitions Attorney
Office of Petitions

Enclosure: Adjusted PAIR Calculation

Day : Wednesday

PALM INTRANET

Date: 4/14/2010
Time: 07:30:31

PTA Calculations for Application: 11/414699			
Application Filing Date:	04/28/2006	PTO Delay (PTO):	516
Issue Date of Patent:		Three Years:	0
Pre-Issue Petitions:	0	Applicant Delay (APPL):	36
Post-Issue Petitions:	0	Total PTA (days):	390
PTO Delay Adjustment:	-90		

File Contents History

Number	Date	Contents Description	PTO	APPL	START
64	04/14/2010	ADJUSTMENT OF PTA CALCULATION BY PTO		90	
52	01/08/2010	MAIL NOTICE OF ALLOWANCE			
51	01/05/2010	ISSUE REVISION COMPLETED			
50	01/05/2010	NOTICE OF ALLOWANCE DATA VERIFICATION COMPLETED			
49	12/29/2009	DOCUMENT VERIFICATION			
48	12/29/2009	CASE DOCKETED TO EXAMINER IN GAU			
47	12/29/2009	NOTICE OF ALLOWABILITY			
46	11/23/2009	INFORMATION DISCLOSURE STATEMENT CONSIDERED			
45	11/23/2009	INFORMATION DISCLOSURE STATEMENT (IDS) FILED			
44	11/25/2009	MAIL EXAMINER INTERVIEW SUMMARY (PTOL - 413)			
43	11/20/2009	EXAMINER INTERVIEW SUMMARY RECORD (PTOL - 413)			
42	11/22/2009	EXAMINER INTERVIEW SUMMARY RECORD (PTOL - 413)			
41	11/22/2009	EXAMINER INTERVIEW SUMMARY RECORD (PTOL - 413)			
40	07/01/2009	REFERENCE CAPTURE ON IDS			
39	07/01/2009	INFORMATION DISCLOSURE STATEMENT (IDS) FILED		36	35
38	09/02/2009	MAIL NON-FINAL REJECTION			
37	08/31/2009	NON-FINAL REJECTION			
36	08/31/2009	DATE FORWARDED TO EXAMINER			
35	05/26/2009	RESPONSE AFTER NON-FINAL ACTION			
34	05/26/2009	REQUEST FOR EXTENSION OF TIME - GRANTED			

33	09/01/2009	MAIL NOTICE OF RESCINDED ABANDONMENT			
32	08/31/2009	NOTICE OF RESCINDED ABANDONMENT IN TCS			
31	07/01/2009	INFORMATION DISCLOSURE STATEMENT CONSIDERED			
30	07/01/2009	INFORMATION DISCLOSURE STATEMENT (IDS) FILED			
29	06/22/2009	MISCELLANEOUS INCOMING LETTER			
28	06/22/2009	MAIL-PETITION TO REVIVE APPLICATION - GRANTED			
27	06/22/2009	PETITION TO REVIVE APPLICATION - GRANTED			
26	05/26/2009	PETITION ENTERED			
25	05/11/2009	MAIL ABANDONMENT FOR FAILURE TO RESPOND TO OFFICE ACTION			
24	05/08/2009	ABAND. FOR FAILURE TO RESPOND TO O. A.			
23	11/25/2008	MAIL NON-FINAL REJECTION	516		-1
22	11/23/2008	NON-FINAL REJECTION			
19	06/08/2006	INFORMATION DISCLOSURE STATEMENT CONSIDERED			
18	10/08/2008	CASE DOCKETED TO EXAMINER IN GAU			
17	09/30/2008	CASE DOCKETED TO EXAMINER IN GAU			
16	08/21/2008	CASE DOCKETED TO EXAMINER IN GAU			
15	06/25/2008	CASE DOCKETED TO EXAMINER IN GAU			
14	08/01/2007	CASE DOCKETED TO EXAMINER IN GAU			
13	06/08/2006	REFERENCE CAPTURE ON IDS			
12.7	06/08/2006	INFORMATION DISCLOSURE STATEMENT (IDS) FILED			
12	06/08/2006	INFORMATION DISCLOSURE STATEMENT (IDS) FILED			
11	04/28/2006	PRELIMINARY AMENDMENT			
10	08/23/2006	IFW TSS PROCESSING BY TECH CENTER COMPLETE			
9	08/17/2006	APPLICATION DISPATCHED FROM OIPE			
8	08/17/2006	APPLICATION IS NOW COMPLETE			
7	07/28/2006	ADDITIONAL APPLICATION FILING FEES			
6	07/28/2006	A STATEMENT BY ONE OR MORE INVENTORS SATISFYING THE REQUIREMENT UNDER 35 USC 115, OATH OF THE APPLIC			

5	05/26/2006	NOTICE MAILED--APPLICATION INCOMPLETE--FILING DATE ASSIGNED			
3	05/19/2006	CLEARED BY OIPE CSR			
2	05/10/2006	IFW SCAN & PACR AUTO SECURITY REVIEW			
1	04/28/2006	INITIAL EXAM TEAM NN			

Search Another: Application# [ ] Search

EXPLANATION OF PTA CALCULATION

EXPLANATION OF PTE CALCULATION

To go back, right click here and select Back. To go forward, right click here and select Forward. To refresh, right click here and select Refresh.

Back to OASIS | Home page

UNITED STATES PATENT AND TRADEMARK OFFICE

Commissioner for Patents
United States Patent and Trademark Office
P.O. Box 1450
Alexandria, VA 22313-1450
www.uspto.gov

CHARLES N.J. RUGGIERIO
OHLANDT GREELEY RUGGIERO & PERLE, LLP
ONE LANDMARK SQUARE, 10TH FLOOR
STAMFORD, CT 06901-2682

COPY MAILED

MAR 0 2 2009

OFFICE OF PETITIONS

In re Application of :
Marcello **CRISTIANI, et al.** :
Application No. 11/414,717 :
Filed: April 28, 2006 :
Attorney Docket No. **0002893USU/4110** :

DECISION ON PETITION
UNDER 37 CFR 1.137(b)

This is a decision on the petition under the unintentional provisions of 37 CFR 1.137(b), filed April 30, 2008, to revive the above-identified application.

The petition is **DISMISSED**.

This application became abandoned for failure to timely pay the issue/publication fees on or before March 28, 2008, as required by the Notice of Allowance and Fee(s) Due, mailed December 28, 2007. Accordingly, the date of abandonment of this application is March 29, 2008.

A grantable petition under 37 CFR 1.137(b) must be accompanied by: (1) the required reply, unless previously filed; (2) the petition fee as set forth in 37 CFR 1.17(m); (3) a statement that the entire delay in filing the required reply from the due date for the reply until the filing of a grantable petition pursuant to 37 CFR 1.137(b) was unintentional; and (4) any terminal disclaimer (and fee as set forth in 37 CFR 1.20(d)) required by 37 CFR 1.137(d). Where there is a question as to whether either the abandonment or the delay in filing a petition under 37 CFR 1.137 was unintentional, the Director may require additional information. See MPEP 711.03(c)(II)(C) and (D). The instant petition lacks item 3, a statement that the entire delay was unintentional.

37 CFR 1.137(b)(3) requires a statement that "the entire delay in filing the required reply from the due date for the reply until the filing of a grantable petition pursuant to 37 CFR 1.137(b) was unintentional." Since the statement appearing in the petition does not track the language required by 37 CFR 1.137(b)(3), the statement cannot be accepted.

Petitioner states that "the entire delay in payment of the four hundred seventy dollar ($470) required issue fee from April 14, 2003 until the filing of this petition under 37 CFR 1.137(b) was unintentional." However, the Notice of Allowance set a issue fee payment of $1440/publication fee of $300 due on or before March 28, 2008.

Any request for reconsideration of this decision must be submitted within TWO (2) MONTHS from the mail date of this decision. Extensions of time under 37 CFR 1.136(a) are permitted. The reconsideration request should include a cover letter entitled "Renewed Petition under 37 CFR 1.137(b)." This is **not** a final agency action within the meaning of 5 U.S.C. § 704.

Further correspondence with respect to this matter should be addressed as follows:

By Mail:
Mail Stop PETITION
Commissioner for Patents
P. O. Box 1450
Alexandria, VA 22313-1450

By hand:
U. S. Patent and Trademark Office
Customer Service Window, Mail Stop Petitions
Randolph Building
401 Dulany Street
Alexandria, VA 22314

The centralized facsimile number is **(571) 273-8300.**

Telephone inquiries concerning this decision should be directed to Monica A. Graves at (571) 272-7253.

Brian W. Brown
Petitions Examiner
Office of Petitions

UNITED STATES PATENT AND TRADEMARK OFFICE

Commissioner for Patents
United States Patent and Trademark Office
P.O. Box 1450
Alexandria, VA 22313-1450
www.uspto.gov

CHARLES N.J. RUGGIERO
OHLANDT GREELEY RUGGIERO & PERLE, LLP
ONE LANDMARK SQUARE, 10TH FLOOR
STAMFORD, CT 06901-2682

MAILED

MAY 14 2009

OFFICE OF PETITIONS

In re Application of :
Marcello CRISTIANI, et al. :
Application No. 11/414,717 :
Filed: April 28, 2006 :
Attorney Docket No. **0002893USU/4110** :

DECISION ON PETITION
UNDER 37 CFR 1.137(b)

This is a decision on the renewed petition under the unintentional provisions of 37 CFR 1.137(b), filed April 2, 2009, to revive the above-identified application.

The petition is **GRANTED**.

This application became abandoned for failure to timely pay the issue/publication fees on or before March 28, 2008, as required by the Notice of Allowance and Fee(s) Due, mailed December 28, 2007. Accordingly, the date of abandonment of this application is March 29, 2008.

37 CFR 1.137(b)(3) requires a statement that "the entire delay in filing the required reply from the due date for the reply until the filing of a grantable petition pursuant to 37 CFR 1.137(b) was unintentional." Since the statement appearing in the petition varies from the language required by 37 CFR 1.137(b)(3), the statement is being construed as the required statement. Petitioner must notify the Office if this is **not** a correct reading of the statement appearing in the petition.

The petition satisfies the requirements of 37 CFR 1.137(b) in that petitioner has supplied (1) the reply in the form of payment of the issue fee of $1440 and publication fee of $300, (2) the petition fee of $1540; and (3) an adequate statement of unintentional delay.

Telephone inquiries concerning this decision should be directed to Monica A. Graves at (571) 272-7253.

This application is being referred to the Office of Data Management for processing into a patent.

Brian W. Brown
Petitions Examiner
Office of Petitions

UNITED STATES PATENT AND TRADEMARK OFFICE

UNITED STATES DEPARTMENT OF COMMERCE
United States Patent and Trademark Office
Address: COMMISSIONER FOR PATENTS
P.O. Box 1450
Alexandria, Virginia 22313-1450
www.uspto.gov

TOWNSEND AND TOWNSEND AND CREW, LLP
TWO EMBARCADERO CENTER
EIGHTH FLOOR
SAN FRANCISCO, CA 94111-3834

Mail Date: 04/21/2010

Applicant	: Ponnampalam Gopalakrishnakone	: DECISION ON REQUEST FOR
Patent Number	: 7579433	: RECALCULATION of PATENT
Issue Date	: 08/25/2009	: TERM ADJUSTMENT IN VIEW
Appliction No	: 11/414,719	: OF WYETH AND NOTICE OF INTENT TO
Filed	: 04/28/2006	: ISSUE CERTIFICATE OF CORRECTION
		:

The Request for Recalculation is **GRANTED** to the extent indicated.

The patent term adjustment has been determined to be **0** days. The USPTO will *sua sponte* issue a certificate of correction reflecting the amount of PTA days determined by the recalculation.

Prior to the issuance of the certificate of correction, the USPTO will afford patentee an opportunity to be heard and request reconsideration. Accordingly, patentee has **one month or thirty (30) days**, whichever is longer, to file a request for reconsideration of this patent term adjustment calculation. See 35 U.S.C. 154(b)(3)(B)(ii) and 37 CFR 1.322(a)(4). No extensions of time will be granted under 37 CFR 1.136.

Patentee should use document code PET.OP if electronically filing a request for reconsideration of this patent term adjustment calculation. The patentee must also include the information required by 37 CFR 1.705(b)(2) and the fee required by 37 CFR 1.18(e). If patentee does not file a timely request for reconsideration of this patent term adjustment calculation including the information required by 37 CFR 1.705(b)(2) and the fee required by 37 CFR 1.18(e), the USPTO will issue a certificate of correction reflecting the PTA determination noted above.

Patentee should be aware that in order to preserve the right to review in the United States District Court for the District of Columbia of the USPTO patent term adjustment determination, patentee must ensure that he or she also take the steps required under 35 U.S.C. 154(b)(4)(A) in a timely manner. Nothing in the request for recalculation should be construed as providing an alternative time frame for commencing a civil action under 35 U.S.C. 154(b)(4)(A).

Any questions concerning this decision should be directed to the Office of Patent Legal Administration at 571-272-7702.

UNITED STATES PATENT AND TRADEMARK OFFICE

UNITED STATES DEPARTMENT OF COMMERCE
United States Patent and Trademark Office
Address: COMMISSIONER FOR PATENTS
P.O. Box 1450
Alexandria, Virginia 22313-1450
www.uspto.gov

VAN PELT, YI & JAMES LLP
10050 N. FOOTHILL BLVD #200
CUPERTINO, CA 95014

Mail Date: 05/05/2010

Applicant	: Mark French	: DECISION ON REQUEST FOR
Patent Number	: 7613188	: RECALCULATION of PATENT
Issue Date	: 11/03/2009	: TERM ADJUSTMENT IN VIEW
Application No	: 11/414,726	: OF WYETH AND NOTICE OF INTENT TO
Filed	: 04/27/2006	: ISSUE CERTIFICATE OF CORRECTION
		:

The Request for Recalculation is **GRANTED** to the extent indicated.

The patent term adjustment has been determined to be **514** days. The USPTO will *sua sponte* issue a certificate of correction reflecting the amount of PTA days determined by the recalculation.

Prior to the issuance of the certificate of correction, the USPTO will afford patentee an opportunity to be heard and request reconsideration. Accordingly, patentee has **one month or thirty (30) days**, whichever is longer, to file a request for reconsideration of this patent term adjustment calculation. See 35 U.S.C. 154(b)(3)(B)(ii) and 37 CFR 1.322(a)(4). No extensions of time will be granted under 37 CFR 1.136.

Patentee should use document code PET.OP if electronically filing a request for reconsideration of this patent term adjustment calculation. The patentee must also include the information required by 37 CFR 1.705(b)(2) and the fee required by 37 CFR 1.18(e). If patentee does not file a timely request for reconsideration of this patent term adjustment calculation including the information required by 37 CFR 1.705(b)(2) and the fee required by 37 CFR 1.18(e), the USPTO will issue a certificate of correction reflecting the PTA determination noted above.

Patentee should be aware that in order to preserve the right to review in the United States District Court for the District of Columbia of the USPTO patent term adjustment determination, patentee must ensure that he or she also take the steps required under 35 U.S.C. 154(b)(4)(A) in a timely manner. Nothing in the request for recalculation should be construed as providing an alternative time frame for commencing a civil action under 35 U.S.C. 154(b)(4)(A).

Any questions concerning this decision should be directed to the Office of Patent Legal Administration at 571-272-7702.

UNITED STATES PATENT AND TRADEMARK OFFICE

Commissioner for Patents
United States Patent and Trademark Office
P.O. Box 1450
Alexandria, VA 22313-1450
www.uspto.gov

TOWNSEND AND TOWNSEND AND CREW, LLP
TWO EMBARCADERO CENTER
EIGHTH FLOOR
SAN FRANCISCO CA 94111-3834

MAILED

JUN 22 2009

OFFICE OF PETITIONS

In re Application of	:	
Frank Sebastian GRASSIA et al.	:	
Application No. 11/414,729	:	DECISION ON PETITION
Filed: April 27, 2006	:	
Attorney Docket No. 021751-007010US	:	

This is a decision on the petition under the unintentional provisions of 37 CFR 1.137(b), filed May 04, 2009, to revive the above-identified application.

The petition is **GRANTED**.

This application became abandoned as a result of petitioner's failure to file an appeal brief (and fee required by 37 CFR 41.20(b)(2)) within the time period provided in 37 CFR 41.37(a)(1). As an appeal brief (and appeal brief fee) was not filed within two (2) months of the Notice of Appeal filed March 31, 2008. A two (2) month extension of time under the provisions of 37 CFR 1.136(a) was obtained. The appeal was dismissed and the proceedings as to the rejected claims were terminated. See 37 CFR 1.197(b). As no claim was allowed, the application became abandoned on June 01, 2008. *See* MPEP 1215.04.

The petition satisfies the requirements of 37 CFR 1.137(b) in that petitioner has supplied (1) the reply in the form of a Request for Continued Examination (RCE) and fee of $810.00, and the submission required by 37 CFR 1.114; (2) the petition fee of $1620.00; and (3) a proper statement of unintentional delay. Accordingly, the reply to the final Office action of March 31, 2008 is accepted as having been unintentionally delayed.

Telephone inquiries concerning this decision should be directed to the undersigned at (571) 272-4231.

This application is being referred to Technology Center AU 2628 for processing of the RCE and for appropriate action by the Examiner in the normal course of business on the amendment submitted in accordance with 37 CFR 1.114.

Michelle R. Eason
Paralegal Specialist
Office of Petition

UNITED STATES PATENT AND TRADEMARK OFFICE

Commissioner for Patents
United States Patent and Trademark Office
P.O. Box 1450
Alexandria, VA 22313-1450
www.uspto.gov

LUMEN PATENT FIRM
2345 YALE STREET
SECOND FLOOR
PALO ALTO CA 94306

COPY MAILED
DEC 02 2008

In re Application of :
Stephen Dao Hui Hsu et al :
Application No. 11/414,741 : ON PETITION
Filed: April 27, 2006 :
Attorney Docket No. RGI-101/US :

This is a decision on the petition under 37 CFR 1.137(b), filed September 29, 2008, to revive the above-identified application.

The petition is **GRANTED**.

The petition satisfies the conditions for revival pursuant to the provisions of 37 CFR 1.137(b) in that (1) the reply ; (2) the petition fee; and (3) the required statement of unintentional delay have been received. Accordingly, the reply to the Notices mailed May 30, 2006 and September 12, 2006, is accepted as having been unintentionally delayed.

The above-identified application has been abandoned for an extended period of time. The Patent and Trademark Office is relying on petitioner's duty of candor and good faith and accepting the statement that the entire delay in filing the required reply from the due date for the reply until the filing of a grantable petition pursuant to 37 CFR 1.137(b) was unintentional. See Changes to Patent Practice and Procedure, 62 Fed. Reg. at 53160 and 53178; 1203 Off. Gaz. Pat. Office at 88 and 103 (responses to comments 64 and 109) (applicant obligated under 37 CFR 10.18 to inquire into the underlying facts and circumstances when providing the statement required by 37 CFR 1.137(b) to the Patent and Trademark Office).

Telephone inquiries concerning this decision should be directed to the undersigned at (571) 272-3208.

This matter is being referred to the Office of Patent Application Processing for pre-examination processing.

Karen Creasy
Petitions Examiner
Office of Petitions

PATENT

IN THE UNITED STATES PATENT AND TRADEMARK OFFICE

IN RE APPLICATION OF	:	William Garmier
FOR	:	**VEGETABLE OIL LUBRICANT COMPRISING FISCHER TROPSCH SYNTHETIC OILS**
SERIAL NO.	:	11/414,753
FILED	:	April 28, 2006
PATENT NO.	:	N/A
ISSUE DATE	:	N/A
ATTORNEY DOCKET NO.	:	30975.42407

Approved 6-12-08
Jacqueline M. Stone
Jacqueline M. Stone, Director
Technology Center 1700

Confirmation No.: 2837
Customer #26781

****

CERTIFICATE OF MAILING

I hereby certify that this **APPLICATION TO WITHDRAW AS ATTORNEY OF RECORD ACCORDING TO 37 C.F.R. § 1.36** is being deposited via EFS-Web electronic filing to: Commissioner for Patents, P.O. Box 1450, Alexandria, VA 22313-1450 on the following date:

3-26-08
Date

/s/ Connie J. Nutter
Connie J. Nutter

****

APPLICATION TO WITHDRAW AS ATTORNEY OF RECORD ACCORDING TO 37 C.F.R. § 1.36

Commissioner for Patents
P.O. Box 1450
Alexandria, VA 22313-1450

Dear Sir:

Pursuant to 37 C.F.R. § 1.36, the undersigned, Heather M. Barnes, Esq., and all attorneys associated with the law firm of Brouse McDowell, hereby request permission to withdraw as attorneys herein.

Three former Brouse McDowell attorneys, Roger D. Emerson, Daniel A. Thomson, and Timothy D. Bennett, formed their own law firm Emerson, Thomson & Bennett. Subsequently, the client terminated its relationship with Brouse McDowell and requested its files be transferred to Emerson, Thomson & Bennett. Pursuant to the mandatory withdrawal provisions of 37 C.F.R. § 10.40(b)(4), Brouse McDowell and the undersigned individually, and on behalf of the attorneys at Brouse McDowell, request that the attorneys listed under customer number 26781 be removed as attorneys of record.

I have delivered to Applicant's new counsel the file for which I was responsible and information they have given to me. Thereby, I have effectively empowered them to carry on prosecution of the patent. Therefore, I believe I have complied with all the obligations placed upon me by the U.S. Patent and Trademark Office to allow such withdrawal and believe I am entitled to the application requested.

We are withdrawing the following contact information:

Brouse McDowell
388 South Main Street
Suite 500
Akron, OH 44311

Phone: 330-535-5711
Fax: 330-253-8601

E-mail: iplaw@brouse.com
Customer No.: 26781

Please send all further correspondence directly to Applicant at the following address:

Emerson, Thomson & Bennett
777 West Market Street
Akron, Ohio 44303
Phone: 330-434-9999
Fax: 330-434-8888
E-mail: dat@emersonthomson.com

Respectfully submitted,

BROUSE MCDOWELL

3-26-08
Date

/s/ Heather M. Barnes
Heather M. Barnes, Esq.
Reg. No. 44,022

Telephone No.: (330) 535-5711
Fax No.: (330) 253-8601

Customer #26781

March 6, 2008

Mrs. Jacqueline Garmier
Renewable Lubricants, Inc.
476 Griggy Road, N.E.
P. O. Box 474
Hartville, OH 44632-0474

Our Ref.: 30975

Dear Jackie:

I am leaving Brouse McDowell and forming the law firm of Emerson, Thomson & Bennett. Both Brouse and Emerson, Thomson & Bennett want to be sure there is no disadvantage to you or your legal matters as a result of my move. Either firm is available to handle your intellectual property matters for which I have been responsible – currently and in the future. The decision about how your legal matters are handled, whether they stay with Brouse, go with me to Emerson, Thomson & Bennett, or are directed to another attorney or law firm, is entirely yours.

Would you please take a minute to complete the enclosed form and fax ((330) 253-8601) and e-mail (dat@brouse.com) it back to me at as soon as possible? If you have any questions about this matter or the status of your legal matters please contact either Lisa Del Grosso (Brouse's firm attorney) or me at 330-535-5711.

Sincerely,

Daniel A. Thomson

#708732 v1

I want: [✓] all active, inactive, and abandoned intellectual property matters, along with the electronic files, transferred to Emerson, Thomson & Bennett, 777 West Market Street, Akron, Ohio 44303

I want: [___] the following active intellectual property matters transferred to Emerson, Thomson & Bennett, 777 West Market Street, Akron, Ohio 44303.

_____

_____

_____

_____

_____

I understand and acknowledge that Brouse McDowell will assume no further professional responsibility for these matters after the date hereof. I further understand and acknowledge that I am responsible for payment of all fees and cost incurred by Brouse McDowell.

_____ I want: [___] all [___] the remaining matters not identified above to continue to be handled by and the files to remain at Brouse McDowell.

By: _____

UNITED STATES PATENT AND TRADEMARK OFFICE

Commissioner for Patents
United States Patent and Trademark Office
P.O. Box 1450
Alexandria, VA 22313-1450
www.uspto.gov

COPY MAILED

APR 0 6 2007

OFFICE OF PETITIONS

CARR & FERRELL LLP
2200 GENG ROAD
PALO ALTO, CA 94303

In re Application of :
BROWN, Kerry D. :
Application No. 11/414,757 : DECISION ON PETITION
Filed: April 28, 2006 : TO WITHDRAW
Attorney Docket No. **PA3694US** : FROM RECORD
:

This is a decision on the Request to Withdraw as attorney or agent of record under 37 C.F.R. § 1.36(b), filed February 16, 2007.

The request is **NOT APPROVED** as moot.

A review of the file record indicates that the power of attorney to **CARR & FERRELL LLP** has been revoked by Kerry Brown of the patent application on March 05, 2007. Accordingly, the request to withdraw under 37 C.F.R. § 1.36(b) is moot.

All future communications from the Office will continue to be directed to the below-listed address until otherwise notified by applicant.

Telephone inquires concerning this decision should be directed to Tredelle Jackson at 571-272-2783.

Monica A. Graves
Petitions Examiner
Office of Petitions

cc: **PATENTS PENDING**
9832 LOIS STILTNER CT
ELK GROVE CA 95624

UNITED STATES PATENT AND TRADEMARK OFFICE

UNITED STATES DEPARTMENT OF COMMERCE
United States Patent and Trademark Office
Address: COMMISSIONER FOR PATENTS
P.O. Box 1450
Alexandria, Virginia 22313-1450
www.uspto.gov

Microsoft Corporation
One Microsoft Way
Redmond, WA 98052

Mail Date: 04/21/2010

Applicant	: Denis C. Demandolx	: DECISION ON REQUEST FOR
Patent Number	: 7656415	: RECALCULATION of PATENT
Issue Date	: 02/02/2010	: TERM ADJUSTMENT IN VIEW
Appliction No	: 11/414,773	: OF WYETH AND NOTICE OF INTENT TO
Filed	: 04/28/2006	: ISSUE CERTIFICATE OF CORRECTION
		:

The Request for Recalculation is **GRANTED** to the extent indicated.

The patent term adjustment has been determined to be **551** days. The USPTO will *sua sponte* issue a certificate of correction reflecting the amount of PTA days determined by the recalculation.

Prior to the issuance of the certificate of correction, the USPTO will afford patentee an opportunity to be heard and request reconsideration. Accordingly, patentee has **one month or thirty (30) days**, whichever is longer, to file a request for reconsideration of this patent term adjustment calculation. See 35 U.S.C. 154(b)(3)(B)(ii) and 37 CFR 1.322(a)(4). No extensions of time will be granted under 37 CFR 1.136.

Patentee should use document code PET.OP if electronically filing a request for reconsideration of this patent term adjustment calculation. The patentee must also include the information required by 37 CFR 1.705(b)(2) and the fee required by 37 CFR 1.18(e). If patentee does not file a timely request for reconsideration of this patent term adjustment calculation including the information required by 37 CFR 1.705(b)(2) and the fee required by 37 CFR 1.18(e), the USPTO will issue a certificate of correction reflecting the PTA determination noted above.

Patentee should be aware that in order to preserve the right to review in the United States District Court for the District of Columbia of the USPTO patent term adjustment determination, patentee must ensure that he or she also take the steps required under 35 U.S.C. 154(b)(4)(A) in a timely manner. Nothing in the request for recalculation should be construed as providing an alternative time frame for commencing a civil action under 35 U.S.C. 154(b)(4)(A).

Any questions concerning this decision should be directed to the Office of Patent Legal Administration at 571-272-7702.

UNITED STATES PATENT AND TRADEMARK OFFICE

UNITED STATES DEPARTMENT OF COMMERCE
United States Patent and Trademark Office
Address: COMMISSIONER FOR PATENTS
P.O. Box 1450
Alexandria, Virginia 22313-1450
www.uspto.gov

Smart & Biggar
438 University Avenue
Box 111, Suite 1500
Toronto, ON M5G 2K8
CANADA

Mail Date: 04/21/2010

Applicant	: Daniel Van Geest	: DECISION ON REQUEST FOR
Patent Number	: 7644149	: RECALCULATION of PATENT
Issue Date	: 01/05/2010	: TERM ADJUSTMENT IN VIEW
Appliction No	: 11/414,779	: OF WYETH AND NOTICE OF INTENT TO
Filed	: 04/28/2006	: ISSUE CERTIFICATE OF CORRECTION
		:

The Request for Recalculation is **GRANTED** to the extent indicated.

The patent term adjustment has been determined to be **229** days. The USPTO will *sua sponte* issue a certificate of correction reflecting the amount of PTA days determined by the recalculation.

Prior to the issuance of the certificate of correction, the USPTO will afford patentee an opportunity to be heard and request reconsideration. Accordingly, patentee has **one month or thirty (30) days**, whichever is longer, to file a request for reconsideration of this patent term adjustment calculation. See 35 U.S.C. 154(b)(3)(B)(ii) and 37 CFR 1.322(a)(4). No extensions of time will be granted under 37 CFR 1.136.

Patentee should use document code PET.OP if electronically filing a request for reconsideration of this patent term adjustment calculation. The patentee must also include the information required by 37 CFR 1.705(b)(2) and the fee required by 37 CFR 1.18(e). If patentee does not file a timely request for reconsideration of this patent term adjustment calculation including the information required by 37 CFR 1.705(b)(2) and the fee required by 37 CFR 1.18(e), the USPTO will issue a certificate of correction reflecting the PTA determination noted above.

Patentee should be aware that in order to preserve the right to review in the United States District Court for the District of Columbia of the USPTO patent term adjustment determination, patentee must ensure that he or she also take the steps required under 35 U.S.C. 154(b)(4)(A) in a timely manner. Nothing in the request for recalculation should be construed as providing an alternative time frame for commencing a civil action under 35 U.S.C. 154(b)(4)(A).

Any questions concerning this decision should be directed to the Office of Patent Legal Administration at 571-272-7702.

UNITED STATES PATENT AND TRADEMARK OFFICE

UNITED STATES DEPARTMENT OF COMMERCE
United States Patent and Trademark Office
Address: COMMISSIONER FOR PATENTS
P.O. Box 1450
Alexandria, Virginia 22313-1450
www.uspto.gov

KRAGULJAC & KALNAY
4700 ROCKSIDE ROAD
SUMMIT ONE, SUITE 510
INDEPENDENCE, OH 44131

Mail Date: 04/20/2010

Applicant	: Rajiv Asati	: DECISION ON REQUEST FOR
Patent Number	: 7602737	: RECALCULATION of PATENT
Issue Date	: 10/13/2009	: TERM ADJUSTMENT IN VIEW
Appliction No	: 11/414,787	: OF WYETH AND NOTICE OF INTENT TO
Filed	: 05/01/2006	: ISSUE CERTIFICATE OF CORRECTION
		:

The Request for Recalculation is **GRANTED** to the extent indicated.

The patent term adjustment has been determined to be **681** days. The USPTO will *sua sponte* issue a certificate of correction reflecting the amount of PTA days determined by the recalculation.

Prior to the issuance of the certificate of correction, the USPTO will afford patentee an opportunity to be heard and request reconsideration. Accordingly, patentee has **one month or thirty (30) days**, whichever is longer, to file a request for reconsideration of this patent term adjustment calculation. See 35 U.S.C. 154(b)(3)(B)(ii) and 37 CFR 1.322(a)(4). No extensions of time will be granted under 37 CFR 1.136.

Patentee should use document code PET.OP if electronically filing a request for reconsideration of this patent term adjustment calculation. The patentee must also include the information required by 37 CFR 1.705(b)(2) and the fee required by 37 CFR 1.18(e). If patentee does not file a timely request for reconsideration of this patent term adjustment calculation including the information required by 37 CFR 1.705(b)(2) and the fee required by 37 CFR 1.18(e), the USPTO will issue a certificate of correction reflecting the PTA determination noted above.

Patentee should be aware that in order to preserve the right to review in the United States District Court for the District of Columbia of the USPTO patent term adjustment determination, patentee must ensure that he or she also take the steps required under 35 U.S.C. 154(b)(4)(A) in a timely manner. Nothing in the request for recalculation should be construed as providing an alternative time frame for commencing a civil action under 35 U.S.C. 154(b)(4)(A).

Any questions concerning this decision should be directed to the Office of Patent Legal Administration at 571-272-7702.

UNITED STATES PATENT AND TRADEMARK OFFICE

Commissioner for Patents
United States Patent and Trademark Office
P.O. Box 1450
Alexandria, VA 22313-1450
www.uspto.gov

02 NOV 2006

Maria M. Eliseeva
HOUSTON ELISEEVA LLP
4 Militia Drive, Ste. 4
Lexington, MA 02421

In re Application of
ULRICH *et al*
U.S. Application No.: 11/414,805
Filing Date: May 1, 2006
Attorney Docket No.: 21295.0129US
For: LENS FOR EVANESCENT WAVE ILLUMINATION AND CORRESPONDING MICROSCOPE

DECISION ON PETITION FOR REVIVAL UNDER 37 CFR 1.137(b)

This decision is in response to applicants' "Petition for Revival of an Application for Patent Abandoned Unintentionally" filed on May 1, 2006. Applicants' petition is hereby **GRANTED** as to the present U.S. national application as follows:

International application PCT/EP2004/052295 became abandoned as to the United States of America for failure to pay the basic national fee by March 25, 2006. The filing of the above-captioned continuing application under 35 U.S.C. 111(a) on May 1, 2006 is accepted as an appropriate response under 37 CFR 1.137(b). The $1500.00 petition fee has been paid. Applicants' statement regarding the delay satisfies the requirement of 37 CFR 1.137(b)(3). Thus, all requirements of 37 CFR 1.137(b) are satisfied.

International application PCT/EP2004/052295 is being revived for purposes of continuity only and since continuity has been established by this decision reviving the international application, the international application is again abandoned in favor of the present continuing application number 11/414,805.

This application is being forwarded to the Office of Initial Patent Examination for further processing under 35 U.S.C. 111(a) with a filing date of May 1, 2006.

James Thomson
Attorney Advisor
Office of PCT Legal Administration

Tel.: (571) 272-3302

UNITED STATES PATENT AND TRADEMARK OFFICE

UNITED STATES DEPARTMENT OF COMMERCE
United States Patent and Trademark Office
Address: COMMISSIONER FOR PATENTS
P.O. Box 1450
Alexandria, Virginia 22313-1450
www.uspto.gov

KRAGULJAC & KALNAY
4700 ROCKSIDE ROAD
SUMMIT ONE, SUITE 510
INDEPENDENCE, OH 44131

Mail Date: 04/22/2010

Applicant	: Jeffrey A. Kraemer	: DECISION ON REQUEST FOR
Patent Number	: 7607041	: RECALCULATION of PATENT
Issue Date	: 10/20/2009	: TERM ADJUSTMENT IN VIEW
Appliction No	: 11/414,810	: OF WYETH AND NOTICE OF INTENT TO
Filed	: 05/01/2006	: ISSUE CERTIFICATE OF CORRECTION
		:

The Request for Recalculation is **GRANTED** to the extent indicated.

The patent term adjustment has been determined to be **610** days. The USPTO will *sua sponte* issue a certificate of correction reflecting the amount of PTA days determined by the recalculation.

Prior to the issuance of the certificate of correction, the USPTO will afford patentee an opportunity to be heard and request reconsideration. Accordingly, patentee has **one month or thirty (30) days**, whichever is longer, to file a request for reconsideration of this patent term adjustment calculation. See 35 U.S.C. 154(b)(3)(B)(ii) and 37 CFR 1.322(a)(4). No extensions of time will be granted under 37 CFR 1.136.

Patentee should use document code PET.OP if electronically filing a request for reconsideration of this patent term adjustment calculation. The patentee must also include the information required by 37 CFR 1.705(b)(2) and the fee required by 37 CFR 1.18(e). If patentee does not file a timely request for reconsideration of this patent term adjustment calculation including the information required by 37 CFR 1.705(b)(2) and the fee required by 37 CFR 1.18(e), the USPTO will issue a certificate of correction reflecting the PTA determination noted above.

Patentee should be aware that in order to preserve the right to review in the United States District Court for the District of Columbia of the USPTO patent term adjustment determination, patentee must ensure that he or she also take the steps required under 35 U.S.C. 154(b)(4)(A) in a timely manner. Nothing in the request for recalculation should be construed as providing an alternative time frame for commencing a civil action under 35 U.S.C. 154(b)(4)(A).

Any questions concerning this decision should be directed to the Office of Patent Legal Administration at 571-272-7702.

UNITED STATES PATENT AND TRADEMARK OFFICE

Commissioner for Patents
United States Patent and Trademark Office
P.O. Box 1450
Alexandria, VA 22313-1450
www.uspto.gov

MAILED

JUL 19 2010

OFFICE OF PETITIONS

Howard IP Law Group
P.O. Box 226
Fort Washington PA 19034

In re Application of	:	
Adam Marturana	:	
Application No. 11/414,815	:	DECISION ON PETITION
Filed: May 1, 2006	:	TO WITHDRAW
Attorney Docket No. LESSEE-1	:	FROM RECORD
	:	

This is a decision on the Request to Withdraw as attorney or agent of record under 37 C.F.R. § 1.36(b), filed June 10, 2010.

The request is **NOT APPROVED.**

The Office will no longer accept address changes to a new practitioner or law firm filed with a Request, absent the filing of a power of attorney to the new representative. The Office will either change the correspondence address of record to the most current address information provided for the assignee of the entire interest who properly became of record under 37 CFR 3.71 or, if no assignee of the entire interest has properly been made of record under 37 CFR 3.71, the most current address information provided for the first named inventor.

Accordingly, the request to withdraw from record cannot be approved because the request to change the correspondence address is not that of: (1) the first named inventor; or (2) an assignee of the entire interest under 37 C.F.R 3.71.

If an assignee has ownership in this application, then a Statement under 37 CFR 3.73(b) or a copy of the actual assignment must be provided with a renewed request.

All future communications from the Office will continue to be directed to the above-identified address until otherwise properly notified.

Telephone inquiries concerning this decision should be directed to the undersigned at 571-272-4618.

/Kimberly Inabinet/

Kimberly Inabinet
Petitions Examiner
Office of Petitions

UNITED STATES PATENT AND TRADEMARK OFFICE

Commissioner for Patents
United States Patent and Trademark Office
P.O. Box 1450
Alexandria, VA 22313-1450
www.uspto.gov

LEWIS, BRISBOIS, BISGAARD & SMITH LLP
221 NORTH FIGUEROA STREET
SUITE 1200
LOS ANGELES CA 90012

COPY MAILED

APR 27 2007

OFFICE OF PETITIONS

In re Application of
Sargon Lazarof
Application No. 11/414,820
Filed: April 29, 2006
Attorney Docket No. 26041-36

DECISION ON PETITION
TO WITHDRAW
FROM RECORD

This is a decision on the Request to Withdraw as attorney or agent of record under 37 C.F.R. § 1.36(b) filed December 14, 2006.

The request is **APPROVED**.

A grantable request to withdraw as attorney/agent of record must be signed by every attorney/agent seeking to withdraw or contain a clear indication that one attorney is signing on behalf of another/others. A request to withdraw will not be approved unless at least 30 (thirty) days would remain between the date of approval and the later of the expiration date of a time to file a response or the expiration date of the maximum time period which can be extended under 37 C.F.R. § 1.136(a).

The request was signed by Sanford Astor on behalf of all attorneys of record who are associated with customer No. 33417.

All attorneys/agents associated with the Customer Number 33417 have been withdrawn.

Applicant is reminded that there is no attorney of record at this time.

The correspondence address of record has been changed and the new correspondence address is the address indicated below.

There is an outstanding Office action mailed February 12, 2007 that requires a reply from the applicant.

UNITED STATES PATENT AND TRADEMARK OFFICE

Commissioner for Patents
United States Patent and Trademark Office
P.O. Box 1450
Alexandria, VA 22313-1450
www.uspto.gov

MEDTRONIC
Attn: Noreen Johnson - IP Legal Department
2600 Sofamor Danek Drive
MEMPHIS TN 38132

8/26/09

In re Application of:
MILLER, KEITH et al
Serial No.: 11/414,832
Filed: April 28, 2006
Docket: 4002-3796/P24568.00
Title: ORTHOPEDIC IMPLANT APPARATUS

DECISION ON PETITION

This is a decision on the petition filed on August 13, 2009 seeking withdrawal of the finality of the Office action mailed June 17, 2009. This petition is being considered pursuant to 37 CFR §1.181. No fee is required.

The petition is granted.

It is noted that the record shows that at least claim 16 was amended in independent form without adding other limitations in the amendment filed on May 27, 2009. Therefore, the rejection of at least claim 16 was not necessitated by the amendment filed on May 27, 2009. As such, the finality of the Office actions issued on June 17, 2009 is premature and thus the finality of the action is hereby withdrawn. The Office action mailed on June 17, 2009 will be designated as non-final Office action. The period to respond to the Office action of June 17, 2009 remains unchanged. Since the finality is being withdrawn, an amendment responding to the Office action will be treated as a 37 CFR § 1.111 amendment.

In finding petitioner's points of argument persuasive, the requested relief is granted. The finality of the last Office action mailed June 17, 2009 is hereby withdrawn. The requested relief is granted.

Any questions regarding this decision should be directed to Special Program Examiner, Henry Yuen, at 571-272-4856.

PETITION GRANTED.

for

Donald T. Hajec, Director
Technology Center 3700

UNITED STATES PATENT AND TRADEMARK OFFICE

UNITED STATES DEPARTMENT OF COMMERCE
United States Patent and Trademark Office
Address: COMMISSIONER FOR PATENTS
P.O. Box 1450
Alexandria, Virginia 22313-1450
www.uspto.gov

DAVIS PATENT SERVICES, LLC
9616 RAVENSWOOD RD.
GRANBURY, TX 76049

Mail Date: 04/21/2010

Applicant	: David L. Hunn	: DECISION ON REQUEST FOR
Patent Number	: 7631589	: RECALCULATION of PATENT
Issue Date	: 12/15/2009	: TERM ADJUSTMENT IN VIEW
Appliction No	: 11/414,843	: OF WYETH AND NOTICE OF INTENT TO
Filed	: 05/01/2006	: ISSUE CERTIFICATE OF CORRECTION
		:

The Request for Recalculation is **GRANTED** to the extent indicated.

The patent term adjustment has been determined to be **676** days. The USPTO will *sua sponte* issue a certificate of correction reflecting the amount of PTA days determined by the recalculation.

Prior to the issuance of the certificate of correction, the USPTO will afford patentee an opportunity to be heard and request reconsideration. Accordingly, patentee has **one month or thirty (30) days**, whichever is longer, to file a request for reconsideration of this patent term adjustment calculation. See 35 U.S.C. 154(b)(3)(B)(ii) and 37 CFR 1.322(a)(4). No extensions of time will be granted under 37 CFR 1.136.

Patentee should use document code PET.OP if electronically filing a request for reconsideration of this patent term adjustment calculation. The patentee must also include the information required by 37 CFR 1.705(b)(2) and the fee required by 37 CFR 1.18(e). If patentee does not file a timely request for reconsideration of this patent term adjustment calculation including the information required by 37 CFR 1.705(b)(2) and the fee required by 37 CFR 1.18(e), the USPTO will issue a certificate of correction reflecting the PTA determination noted above.

Patentee should be aware that in order to preserve the right to review in the United States District Court for the District of Columbia of the USPTO patent term adjustment determination, patentee must ensure that he or she also take the steps required under 35 U.S.C. 154(b)(4)(A) in a timely manner. Nothing in the request for recalculation should be construed as providing an alternative time frame for commencing a civil action under 35 U.S.C. 154(b)(4)(A).

Any questions concerning this decision should be directed to the Office of Patent Legal Administration at 571-272-7702.

UNITED STATES PATENT AND TRADEMARK OFFICE

Commissioner for Patents
United States Patent and Trademark Office
P.O. Box 1450
Alexandria, VA 22313-1450
www.uspto.gov

COPY MAILED

OCT 2 4 2006

OFFICE OF PETITIONS

Julie K. Staple
Gifford, Krass, Groh, Sprinkle
Anderson & Citkowski, P.C.
PO Box 7021
Troy MI 48007-7021

In re Application of	:	
Roy J. Mankovitz	:	
Application No. 11/414,863	:	DECISION ON PETITION
Filed: May 1, 2006	:	TO MAKE SPECIAL UNDER
Attorney Docket No. MRJ-13502/03	:	37 CFR 1.102(c)(1)
	:	

This is a decision on the petition under 37 CFR 1.102(c)(1), filed July 24, 2006, to make the above-identified application special based on applicant's age as set forth in M.P.E.P. § 708.02, Section IV.

The petition is **GRANTED**.

A grantable petition to make an application special under 37 CFR 1.102(c)(1) and MPEP § 708.02, Section IV: Applicant's Age, must be accompanied by evidence showing that at least one of the applicants is 65 years of age, or more, such as a birth certificate or a statement by applicant. No fee is required.

The instant petition includes a signed Declaration under 37 C.F.R 1.102(c)(1) stating that applicant is over 65 years of age. Accordingly, the above-identified application has been accorded "special" status.

Telephone inquiries concerning this decision should be directed to Charles Smoot at 571-272-3299.

All other inquiries concerning either the examination or status of the application should be directed to the Technology Center.

The application is being forwarded to the Technology Center Art Unit 1761 for action on the merits commensurate with this decision.

David Bucci
Petitions Examiner
Office of Petitions

APPROVED: /DS/

IN THE UNITED STATES PATENT AND TRADEMARK OFFICE

In re Patent No.:	7,273,173 B2
Applicant:	Forster
Issue Date:	February 11, 2008
For:	RFID DEVICE DETECTION SYSTEM AND METHOD
Examiner:	Daniel Steyr
Docket No.	P3429 USA

REQUEST FOR CERTIFICATE OF CORRECTION OF PATENT FOR PTO MISTAKE (37 CFR 1.322(a))

Commissioner for Patents
P.O. Box 1450
Alexandria, VA 22313-1450

Attention: Decision and Certificate of Correction
Branch of the Patent Issue Division

Sir:

Request is made for issuance of a certificate of correction to correct a PTO mistake in the printing of the subject patent. Attached hereto in duplicate is form PTO/SB/44 with at least one copy being suitable for printing.

The correct Figure 13 can be found as part of the originally filed application. Please note that this figure was correct in the publication of the pending application.

Please send the Certificate to:

RENNER, OTTO, BOISSELLE & SKLAR, LLP
1621 Euclid Avenue – Nineteenth Floor
Cleveland, OH 44115

No fee is believed to be necessary. However, if the errors are found to be those of the applicant, please charge any required fee to Deposit Account No. 18-0988 under the above shown docket number.

Respectfully submitted,

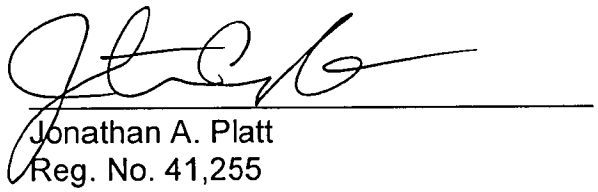

Jonathan A. Platt
Reg. No. 41,255

RENNER, OTTO, BOISSELLE & SKLAR, LLP
1621 Euclid Avenue
Nineteenth Floor
Cleveland, OH 44115

(216) 621-1113

C:\Documents and Settings\bbatts\Desktop\Renner Otto\Forms\f0530.CoC Request.wpd

PTO/SB/44 (09-07)
Approved for use through 08/31/2010. OMB 0651-0033
U.S. Patent and Trademark Office; U.S. DEPARTMENT OF COMMERCE
Under the Paperwork Reduction Act of 1995, no persons are required to respond to a collection of information unless it displays a valid OMB control number.
(Also Form PTO-1050)

UNITED STATES PATENT AND TRADEMARK OFFICE
CERTIFICATE OF CORRECTION

PATENT NO. : 7,273,173
APPLICATION NO.: 11/414,889
ISSUE DATE : September 25, 2007
INVENTOR(S) : Forster

It is certified that an error appears or errors appear in the above-identified patent and that said Letters Patent is hereby corrected as shown below:

Replace Figure 13 with the following:

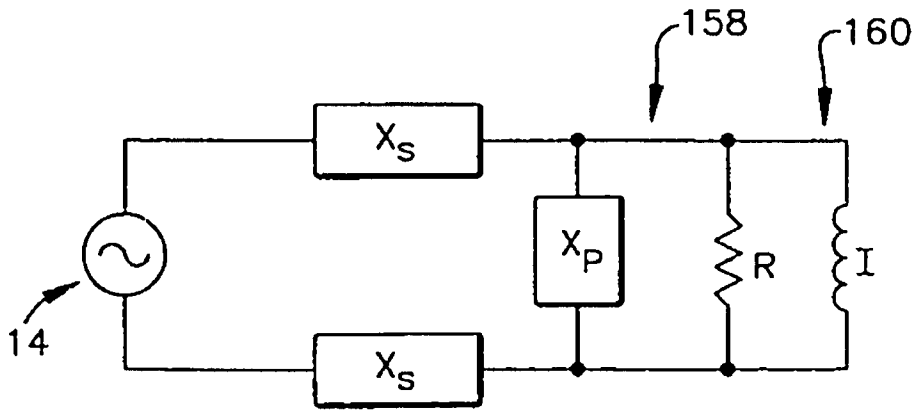

Fig.13

MAILING ADDRESS OF SENDER (Please do not use customer number below):

This collection of information is required by 37 CFR 1.322, 1.323, and 1.324. The information is required to obtain or retain a benefit by the public which is to file (and by the USPTO to process) an application. Confidentiality is governed by 35 U.S.C. 122 and 37 CFR 1.14. This collection is estimated to take 1.0 hour to complete, including gathering, preparing, and submitting the completed application form to the USPTO. Time will vary depending upon the individual case. Any comments on the amount of time you require to complete this form and/or suggestions for reducing this burden, should be sent to the Chief Information Officer, U.S. Patent and Trademark Office, U.S. Department of Commerce, P.O. Box 1450, Alexandria, VA 22313-1450. DO NOT SEND FEES OR COMPLETED FORMS TO THIS ADDRESS. **SEND TO: Attention Certificate of Corrections Branch, Commissioner for Patents, P.O. Box 1450, Alexandria, VA 22313-1450.**

If you need assistance in completing the form, call 1-800-PTO-9199 and select option 2.

PTO/SB/44 (09-07)
Approved for use through 08/31/2010. OMB 0651-0033
U.S. Patent and Trademark Office; U.S. DEPARTMENT OF COMMERCE
Under the Paperwork Reduction Act of 1995, no persons are required to respond to a collection of information unless it displays a valid OMB control number.
(Also Form PTO-1050)

UNITED STATES PATENT AND TRADEMARK OFFICE
CERTIFICATE OF CORRECTION

PATENT NO. : 7,273,173
APPLICATION NO.: 11/414,889
ISSUE DATE : September 25, 2007
INVENTOR(S) : Forster

It is certified that an error appears or errors appear in the above-identified patent and that said Letters Patent is hereby corrected as shown below:

Replace Figure 13 with the following:

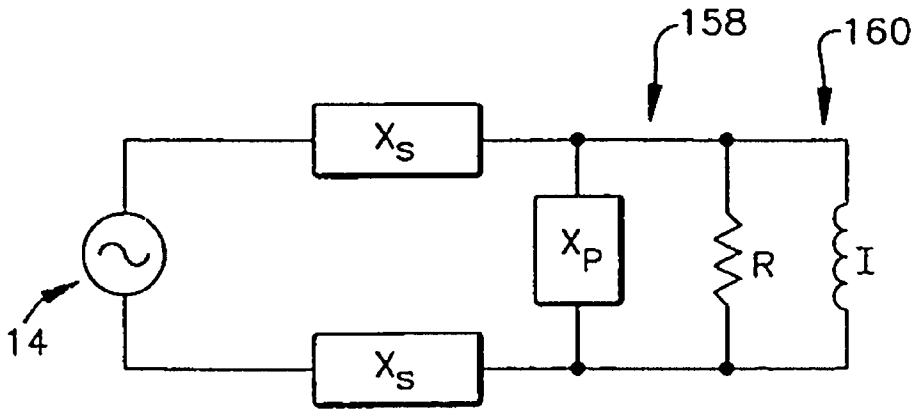

Fig.13

MAILING ADDRESS OF SENDER (Please do not use customer number below):

This collection of information is required by 37 CFR 1.322, 1.323, and 1.324. The information is required to obtain or retain a benefit by the public which is to file (and by the USPTO to process) an application. Confidentiality is governed by 35 U.S.C. 122 and 37 CFR 1.14. This collection is estimated to take 1.0 hour to complete, including gathering, preparing, and submitting the completed application form to the USPTO. Time will vary depending upon the individual case. Any comments on the amount of time you require to complete this form and/or suggestions for reducing this burden, should be sent to the Chief Information Officer, U.S. Patent and Trademark Office, U.S. Department of Commerce, P.O. Box 1450, Alexandria, VA 22313-1450. DO NOT SEND FEES OR COMPLETED FORMS TO THIS ADDRESS. **SEND TO: Attention Certificate of Corrections Branch, Commissioner for Patents, P.O. Box 1450, Alexandria, VA 22313-1450.**

If you need assistance in completing the form, call 1-800-PTO-9199 and select option 2.

UNITED STATES PATENT AND TRADEMARK OFFICE

UNITED STATES DEPARTMENT OF COMMERCE
United States Patent and Trademark Office
Address: COMMISSIONER FOR PATENTS
P.O. Box 1450
Alexandria, Virginia 22313-1450
www.uspto.gov

SEAGATE TECHNOLOGY LLC
INTELLECTUAL PROPERTY DEPT./ MAIL STOP NRW-097
7801 COMPUTER AVENUE SOUTH
BLOOMINGTON, MN 55435

Mail Date: 04/21/2010

Applicant	: Paul Max Jones	: DECISION ON REQUEST FOR
Patent Number	: 7599213	: RECALCULATION of PATENT
Issue Date	: 10/06/2009	: TERM ADJUSTMENT IN VIEW
Appliction No	: 11/414,893	: OF WYETH AND NOTICE OF INTENT TO
Filed	: 05/01/2006	: ISSUE CERTIFICATE OF CORRECTION
		:

The Request for Recalculation is **GRANTED** to the extent indicated.

The patent term adjustment has been determined to be **461** days. The USPTO will *sua sponte* issue a certificate of correction reflecting the amount of PTA days determined by the recalculation.

Prior to the issuance of the certificate of correction, the USPTO will afford patentee an opportunity to be heard and request reconsideration. Accordingly, patentee has **one month or thirty (30) days**, whichever is longer, to file a request for reconsideration of this patent term adjustment calculation. See 35 U.S.C. 154(b)(3)(B)(ii) and 37 CFR 1.322(a)(4). No extensions of time will be granted under 37 CFR 1.136.

Patentee should use document code PET.OP if electronically filing a request for reconsideration of this patent term adjustment calculation. The patentee must also include the information required by 37 CFR 1.705(b)(2) and the fee required by 37 CFR 1.18(e). If patentee does not file a timely request for reconsideration of this patent term adjustment calculation including the information required by 37 CFR 1.705(b)(2) and the fee required by 37 CFR 1.18(e), the USPTO will issue a certificate of correction reflecting the PTA determination noted above.

Patentee should be aware that in order to preserve the right to review in the United States District Court for the District of Columbia of the USPTO patent term adjustment determination, patentee must ensure that he or she also take the steps required under 35 U.S.C. 154(b)(4)(A) in a timely manner. Nothing in the request for recalculation should be construed as providing an alternative time frame for commencing a civil action under 35 U.S.C. 154(b)(4)(A).

Any questions concerning this decision should be directed to the Office of Patent Legal Administration at 571-272-7702.

UNITED STATES PATENT AND TRADEMARK OFFICE

Commissioner for Patents
United States Patent and Trademark Office
P.O. Box 1450
Alexandria, VA 22313-1450
www.uspto.gov

02 NOV 2006

Maria M. Eliseeva
HOUSTON ELISEEVA LLP
4 Militia Drive, Ste. 4
Lexington, MA 02421

In re Application of :
HECKER *et al* :
U.S. Application No.: 11/414,905 :
Filing Date: May 1, 2006 :
Attorney Docket No.: 21295.0128US : **DECISION**
For: METHOD FOR ANALYZING A SAMPLE :
AND MICROSCOPE FOR :
EVANESCENTLY ILLUMINATING THE :
SAMPLE :

Applicants' petition under 37 CFR 1.137(b) filed May 1, 2006 is hereby **GRANTED** as to the present U.S. national application as follows:

International application PCT/EP2004/052273 became abandoned as to the United States of America for failure to pay the basic national fee by March 27, 2006 (March 25, 2006 was a Saturday). The filing of the above-captioned continuing application under 35 U.S.C. 111(a) on May 1, 2006 is accepted as an appropriate response under 37 CFR 1.137(b). The $1500.00 petition fee has been paid. Applicants' statement regarding the delay satisfies the requirement of 37 CFR 1.137(b)(3). Thus, all requirements of 37 CFR 1.137(b) are satisfied.

International application PCT/EP2004/052273 is being revived for purposes of continuity only and since continuity has been established by this decision reviving the international application, the international application is again abandoned in favor of the present continuing application number 11/414,905.

This application is being forwarded to the Office of Initial Patent Examination for further processing under 35 U.S.C. 111(a) with a filing date of May 1, 2006.

James Thomson
Attorney Advisor
Office of PCT Legal Administration

Tel.: (571) 272-3302

UNITED STATES PATENT AND TRADEMARK OFFICE

Commissioner for Patents
United States Patent and Trademark Office
P.O. Box 1450
Alexandria, VA 22313-1450
www.uspto.gov

COPY MAILED

NOV 0 9 2009

OFFICE OF PETITIONS

PITTS AND BRITTIAN P C
P.O. BOX 51295
KNOXVILLE, TN 37950-1295

In re Application of :
Peter M. Osucha et al :
Application No. 11/414,920 : ON PETITION
Filed: May 1, 2006 :
Attorney Docket No. 31245.00 :

This is a decision on the petition under 37 CFR 1.137(b), filed September 17, 2009, to revive the above-identified application.

The petition is **DISMISSED.**

Any request for reconsideration of this decision must be submitted within TWO (2) MONTHS from the mail date of this decision. Extensions of time under 37 CFR 1.136(a) are permitted. The reconsideration request should include a cover letter entitled "**Renewed Petition under 37 CFR 1.137(b)**." This is **not** final agency action within the meaning of 5 U.S.C. § 704.

The above-identified application became abandoned for failure to reply in a timely manner to the non-final Office action mailed December 5, 2008, which set a shortened statutory period for reply of three (3) months. No extension of time under the provisions of 37 CFR 1.136(a) was obtained. Accordingly, the above-identified application became abandoned on March 6, 2009.

An extension of time under 37 CFR 1.136 must be filed prior to the expiration of the maximum extendable period for reply. See In re Application of S., 8 USPQ2d 1630, 1631 (Comm'r Pats. 1988). Accordingly, since the $555 extension of time submitted with the petition on September 17, 2009 was subsequent to the maximum extendable period for reply, this fee is unnecessary and will be credited to petitioner's deposit account.

A grantable petition under 37 CFR 1.137(b) must be accompanied by: (1) the required reply, unless previously filed; (2) the petition fee as set forth in 37 CFR 1.17(m); (3) a statement that the entire delay in filing the required reply from the due date for the reply until the filing of a grantable petition pursuant to 37 CFR 1.137(b) was unintentional; and (4) any terminal disclaimer (and fee as set forth in 37 CFR 1.20(d)) required by 37 CFR 1.137(c). Where there is a question as to whether either the abandonment or the delay in filing a petition under 37 CFR 1.137 was unintentional, the Commissioner may require additional information. See MPEP 711.03(c)(III)(C) and (D). The instant petition lack(s) item(s) (1).

The petition submitted on September 17, 2009 was signed by one (1) applicant, Peter M. Osucha.

Communications received at the USPTO must be signed by all of the applicants. 37 CFR 1.33(b) states:

> "Amendments and other papers filed in the application must be signed by: (1) An attorney or agent of record appointed in compliance with § 1.34(b); (2) A registered attorney or agent not of record who acts in a representative capacity under the provisions of § 1.34(a); (3) The assignee of record of the entire interest, if there is an assignee of record of the entire interest; (4) An assignee of record of an undivided part interest, and any assignee(s) of the remaining interest and any applicant retaining an interest, if there is an assignee of record of an undivided part interest; or (5) All of the applicants (§§ 1.42. 1.43 and 1.47) for patent, unless there is an assignee of record of the entire interest and such assignee has taken action in the application in accordance with §§ 3.71 and 3.73."

The file does not indicate a change of address has been submitted, although the address given on the petition differs from the address of record. If appropriate, a change of address should be filed in accordance with MPEP 601.03. A courtesy copy of this decision is being mailed to the address of record.

Further correspondence with respect to this matter should be addressed as follows:

By mail: Mail Stop PETITION
Commissioner for Patents
Post Office Box 1450
Alexandria, VA 22313-1450

By hand: Customer Service Window
Randolph Building
401 Dulany Street
Alexandria, VA 22314

By facsimile: (571) 273-8300
ATTN: Office of Petitions

Telephone inquiries concerning this decision should be directed to the undersigned at (571) 272-3210.

Irvin Dingle
Petitions Examiner
Office of Petitions

cc: Peter M. Osucha
8819 Joe Daniels Road
Knoxville, TN 37931

UNITED STATES PATENT AND TRADEMARK OFFICE

Commissioner for Patents
United States Patent and Trademark Office
P. O. Box 1450
Alexandria, VA 22313-1450
www. uspto. gov

MAILED

FEB 26 2010

OFFICE OF PETITIONS

PETER M. OSUCHA
PITTS AND BRITTIAN P.C.
P.O. BOX 51295
KNOXVILLE, TN 37950-1295

In re Application of :
Peter M. Osucha et al :
Application No. 11/414,920 : ON PETITION
Filed: May 1, 2006 :
Attorney Docket No. 31245.00 :

This is a decision on the renewed petition under 37 CFR 1.137(b), filed December 3, 2009, to revive the above-identified application.

The petition is **GRANTED.**

Telephone inquiries concerning this decision should be directed to Irvin Dingle at (571) 272-3210.

This matter is being referred to Technology Center AU 3743 for further processing.

Irvin Dingle
Petitions Examiner
Office of Petitions

UNITED STATES PATENT AND TRADEMARK OFFICE

UNITED STATES DEPARTMENT OF COMMERCE
United States Patent and Trademark Office
Address: COMMISSIONER FOR PATENTS
P.O. Box 1450
Alexandria, Virginia 22313-1450
www.uspto.gov

ABB Inc.
Legal Dept. - 4U6
29801 Euclid Avenue
Wickliffe, OH 44092-1832

Mail Date: 04/21/2010

Applicant	: Peter Quang Tran	: DECISION ON REQUEST FOR
Patent Number	: 7584013	: RECALCULATION of PATENT
Issue Date	: 09/01/2009	: TERM ADJUSTMENT IN VIEW
Appliction No	: 11/414,922	: OF WYETH AND NOTICE OF INTENT TO
Filed	: 05/01/2006	: ISSUE CERTIFICATE OF CORRECTION
		:

The Request for Recalculation is **GRANTED** to the extent indicated.

The patent term adjustment has been determined to be **487** days. The USPTO will *sua sponte* issue a certificate of correction reflecting the amount of PTA days determined by the recalculation.

Prior to the issuance of the certificate of correction, the USPTO will afford patentee an opportunity to be heard and request reconsideration. Accordingly, patentee has **one month or thirty (30) days**, whichever is longer, to file a request for reconsideration of this patent term adjustment calculation. See 35 U.S.C. 154(b)(3)(B)(ii) and 37 CFR 1.322(a)(4). No extensions of time will be granted under 37 CFR 1.136.

Patentee should use document code PET.OP if electronically filing a request for reconsideration of this patent term adjustment calculation. The patentee must also include the information required by 37 CFR 1.705(b)(2) and the fee required by 37 CFR 1.18(e). If patentee does not file a timely request for reconsideration of this patent term adjustment calculation including the information required by 37 CFR 1.705(b)(2) and the fee required by 37 CFR 1.18(e), the USPTO will issue a certificate of correction reflecting the PTA determination noted above.

Patentee should be aware that in order to preserve the right to review in the United States District Court for the District of Columbia of the USPTO patent term adjustment determination, patentee must ensure that he or she also take the steps required under 35 U.S.C. 154(b)(4)(A) in a timely manner. Nothing in the request for recalculation should be construed as providing an alternative time frame for commencing a civil action under 35 U.S.C. 154(b)(4)(A).

Any questions concerning this decision should be directed to the Office of Patent Legal Administration at 571-272-7702.

UNITED STATES PATENT AND TRADEMARK OFFICE

Commissioner for Patents
United States Patent and Trademark Office
P.O. Box 1450
Alexandria, VA 22313-1450
www.uspto.gov

OBER|KALER
120 EAST BALTIMORE STREET
BALTIMORE, MD 21202-1643

COPY MAILED

JUN 0 6 2007

OFFICE OF PETITIONS

In re Application of	:	
Benstead, Evan	:	
Application No. 11/414,932	:	ON PETITION
Filed: May 1, 2006	:	
Attorney Docket No. 023309.076438	:	

This is a decision on the petition under 37 C.F.R. § 1.137(b), filed February 9, 2007, to revive the above-identified application.

The petition is **GRANTED.**

The petition satisfies the conditions for revival pursuant to the provisions of 37 CFR 1.137(b) in that (1) the reply in the form of replacement claims; (2) the petition fee; and (3) the required statement of unintentional delay have been received. Accordingly, the response has been accepted as having been unintentionally delayed.

This matter is being referred to the Office of Initial Patent Examination for further processing.

Telephone inquiries regarding this decision should be directed to the undersigned at (571) 272-3206.

Liana Walsh
Petitions Examiner
Office of Petitions

UNITED STATES PATENT AND TRADEMARK OFFICE

Commissioner for Patents
United States Patent and Trademark Office
P.O. Box 1450
Alexandria, VA 22313-1450
www.uspto.gov

COPY MAILED

DEC 1 0 2009

OFFICE OF PETITIONS

WILSON DANIEL SWAYZE, JR
3804 CLEARWATER CT.
PLANO TX 75025

In re Application of :
Koh :
Application No. 11/414,937 : DECISION
Filed: 1 May, 2006 :
Attorney Docket No. WDS-1570 :

This is a decision on the petition filed on 16 September, 2009, pursuant to 37 C.F.R. §1.137(b) for revival of an application abandoned due to unintentional delay .

The petition under 37 C.F.R. §1.137(b) is **GRANTED**.

As to the Allegations
of Unintentional Delay

The requirements of a grantable petition pursuant to 37 C.F.R. §1.137(b) are the petition and fee therefor, a reply, a proper statement of unintentional delay under the regulation, and, where applicable, a terminal disclaimer and fee.

Petitioners' attentions always are directed to the guidance in the Commentary at MPEP §711.03(c)(II).

BACKGROUND

The record reflects as follows:

Petitioner failed to reply timely and properly to a Restriction Requirement mailed on 23 June, 2008, with reply due absent extension of time on or before 23 July, 2008.

The application went abandoned by operation of law after midnight 23 July, 2008.

The Office mailed the Notice of Abandonment on 3 February, 2009.

On 16 September, 2009, Petitioner filed, *inter alia*, a petition (with fee) pursuant to 37 C.F.R. §1.137(b), a reply in the form of an Election and made the statement of unintentional delay—the

filing was nearly fourteen (14) months after abandonment and nearly eight (8) months after Notice thereof.

The record (including the petition filed on 16 September, 2009) does not necessitate a finding that the delay between midnight 23 July, 2008 (the date of abandonment), and 16 September, 2009 (the date of the filing of grantable petition), was not unintentional.

Rather, the Patent and Trademark Office is relying in this matter on the duty of candor and good faith of Petitioner Koh and Counsel Richard J. Apley (Reg. No. 51,316) when accepting Petitioners' representation that the delay in filing the response was unintentional.[1]

The availability of applications and application papers online to applicants/practitioners who diligently associate their Customer Number with the respective application(s) now provides an applicant/practitioner on-demand information as to events/transactions in an application.

Out of an abundance of caution, Petitioners always are reminded that those registered to practice and all others who make representations before the Office **must** inquire into the underlying facts of representations made to the Office and support averments with the appropriate documentation–since all owe to the Office the continuing duty to disclose.[2]

STATUTES, REGULATIONS AND ANALYSIS

Congress has authorized the Commissioner to "revive an application if the delay is shown to the satisfaction of the Commissioner to have been "unavoidable." 35 U.S.C. §133 (1994).[3] The regulations at 37 C.F.R. §1.137(a) and (b) set forth the requirements for a Petitioner to revive a previously unavoidably or unintentionally, respectively, abandoned application under this congressional grant of authority.

Unintentional delays are those that do not satisfy the very strict statutory and regulatory requirements of unavoidable delay, and also, by definition, are not intentional.[4]))

---

[1] See Changes to Patent Practice and Procedure, 62 Fed. Reg. at 53160 and 53178, 1203 Off. Gaz. Pat. Office at 88 and 103 (responses to comments 64 and 109)(applicant obligated under 37 C.F.R. §10.18 to inquire into the underlying facts and circumstances when providing the statement required by 37 C.F.R. §1.137(b) to the Patent and Trademark Office).

[2] See supplement of 17 June, 1999. The Patent and Trademark Office is relying on petitioner's duty of candor and good faith and accepting a statement made by Petitioner. See Changes to Patent Practice and Procedure, 62 Fed. Reg. at 53160 and 53178, 1203 Off. Gaz. Pat. Office at 88 and 103 (responses to comments 64 and 109)(applicant obligated under 37 C.F.R. §10.18 to inquire into the underlying facts and circumstances when providing statements to the Patent and Trademark Office).

[3] 35 U.S.C. §133 provides:

35 U.S.C. §133 Time for prosecuting application.

Upon failure of the applicant to prosecute the application within six months after any action therein, of which notice has been given or mailed to the applicant, or within such shorter time, not less than thirty days, as fixed by the Commissioner in such action, the application shall be regarded as abandoned by the parties thereto, unless it be shown to the satisfaction of the Commissioner that such delay was unavoidable.

[4] Therefore, by example, an unintentional delay in the reply might occur if the reply and transmittal form are to be prepared for shipment by the US Postal Service, but other pressing matters distract one's attention and the mail is not timely deposited for shipment.

As to Allegations of
Unintentional Delay

The requirements of a grantable petition pursuant to 37 C.F.R. §1.137(b) are the petition and fee therefor, a reply, a proper statement of unintentional delay under the regulation, and, where applicable, a terminal disclaimer and fee.

It appears that the requirements under the rule have been satisfied.

CONCLUSION

Accordingly, the petition under 37 C.F.R. §1.137(b) is **granted**.

The instant application is released to the Technology Center/AU 3728 for further processing in due course.

Petitioner may find it beneficial to view Private PAIR within a fortnight of the instant decision to ensure that the revival has been acknowledged by the TC/AU in response to this decision. It is noted that all inquiries with regard to that change in status need be directed to the TC/AU where that change of status must be effected—that does not occur in the Office of Petitions.

Telephone inquiries regarding this decision may be directed to the undersigned at (571) 272-3214—it is noted, however, that all practice before the Office is in writing (see: 37 C.F.R. §1.2[5]) and the proper authority for action on any matter in this regard are the statutes (35 U.S.C.), regulations (37 C.F.R.) and the commentary on policy (MPEP). Therefore, no telephone discussion may be controlling or considered authority for Petitioner's action(s).

/John J. Gillon, Jr./
John J. Gillon, Jr.
Senior Attorney
Office of Petitions

---

[5] The regulations at 37 C.F.R. §1.2 provide:

§1.2 Business to be transacted in writing.

All business with the Patent and Trademark Office should be transacted in writing. The personal attendance of applicants or their attorneys or agents at the Patent and Trademark Office is unnecessary. The action of the Patent and Trademark Office will be based exclusively on the written record in the Office. No attention will be paid to any alleged oral promise, stipulation, or understanding in relation to which there is disagreement or doubt.

UNITED STATES PATENT AND TRADEMARK OFFICE

Commissioner for Patents
United States Patent and Trademark Office
P.O. Box 1450
Alexandria, VA 22313-1450
www.uspto.gov

ORUM & ROTH
53 W. JACKSON BLVD
CHICAGO IL 60604

COPY MAILED

OCT 3 0 2006

OFFICE OF PETITIONS

In re Application of :

Nobuhiro Tanaka :
Application No. 11/414,963 : DECISION ON PETITION
Filed: May 1, 2006 : TO WITHDRAW
Attorney Docket No. 14383 : FROM RECORD

This is a decision on the Request to Withdraw as attorney or agent of record under 37 C.F.R. § 1.36(b), filed July 16, 2006.

The request is **APPROVED**.

A review of the file record indicates that Catherine L. Glemrich: (1) does not have power of attorney in this patent application; and (2) has been employed or otherwise engaged in the proceedings in this patent application. In view of the present decision, Catherine L. Glemrich has been withdrawn from the present application and may not prepare or submit papers under 37 C.F.R. § 1.34, or correspond in any manner in this application unless appointed in an acceptable power of attorney under 37 C.F.R. § 1.32(b).

The request was signed by Catherine L. Glemrich attorney/agent of record on behalf of herself.

Catherine L. Glemrich has been withdrawn as attorney or agent of record; all other attorneys remain of record.

All future communications from the Office will continue to be directed to the above-listed address until otherwise properly notified by the applicant.

Telephone inquiries concerning this decision should be directed to Charles Smoot at 571-272-3299.

David Bucci
Petitions Examiner
Office of Petitions

UNITED STATES PATENT AND TRADEMARK OFFICE

Commissioner for Patents
United States Patent and Trademark Office
P.O. Box 1450
Alexandria, VA 22313-1450
www.uspto.gov

MICROSOFT CORPORATION
ONE MICROSOFT WAY
REDMOND WA 98052-6399

COPY MAILED

SEP 13 2007

OFFICE OF PETITIONS

In re Application of :
Milic-Frayling :
Application No. 11/414,967 : ON PETITION
Filed: May 1, 2006 :
Attorney Docket No. 309294.01 :
For: CONTEXT INFORMATION COMMUNICATIONS VIA A MOBILE DEVICE

This is a decision on the petition under 37 CFR 1.137(b), filed April 23, 2007 (certificate of mailing date April 20, 2007), to revive the above-identified application.

The petition under 37 CFR 1.137(b) is **GRANTED**.

This application became abandoned for failure to timely reply to the Notice to File Missing Parts of Application mailed May 23, 2006, which set a two month shortened statutory period for reply. No extensions of time having been obtained pursuant to 37 CFR 1.136(a) and no reply being received in the Office, this application became abandoned on July 24, 2006. A Notice of Abandonment was mailed on January 25, 2007.

Applicants have submitted a proper reply to the May 23, 2006 Notice in the form of an executed declaration and $130.00 surcharge, an acceptable statement of the unintentional nature of the delay in responding to the May 23, 2006 Notice, and the $1,500.00 petition fee. Accordingly, the petition under 37 CFR 1.137(b) is granted.

After the mailing of this decision, the file will be returned to the Office of Initial Patent Examination for further processing.

Telephone inquiries concerning this matter may be directed to the undersigned at (571) 272-3230.

Shirene Willis Brantley
Senior Petitions Attorney
Office of Petitions

UNITED STATES PATENT AND TRADEMARK OFFICE

Commissioner for Patents
United States Patent and Trademark Office
P.O. Box 1450
Alexandria, VA 22313-1450
www.uspto.gov

MARRELL HANEY
1301 WEST 96TH STREET
CHICAGO, IL 60643

COPY MAILED

JUL 0 7 2006

OFFICE OF PETITIONS

In re Application of :
Marrell Haney :
Application No. 11/414,973 : DECISION ON PETITION
Filed: May 1, 2006 : TO MAKE SPECIAL UNDER
For: EXTERIOR FIRE RESISTANT, : 37 CFR 1.102(c)(1)
PASSENGER ELEVATOR SYSTEM

This is a decision on the petition under 37 CFR 1.102(c)(1), filed June 6, 2006, to make the above-identified application special based on applicant's age as set forth in M.P.E.P. § 708.02, Section IV.

The petition is **GRANTED**.

A grantable petition to make an application special under 37 CFR 1.102(c)(1) and MPEP § 708.02, Section IV: Applicant's Age must be accompanied by evidence showing that at least one of the applicants is 65 years of age, or more, such as a birth certificate or a statement by applicant. No fee is required.

The petition includes a statement by Marrell Haney attesting that he is over 65 years of age. Accordingly, the above-identified application has been accorded "special" status.

Telephone inquiries concerning this decision should be directed to Wan Laymon at 571-272-3220.

All other inquiries concerning either the examination or status of the application should be directed to the Technology Center.

This application is being referred to Technology Center AU 3644 for action on the merits commensurate with this decision.

Wan Laymon
Petitions Examiner
Office of Petitions

UNITED STATES PATENT AND TRADEMARK OFFICE

UNITED STATES DEPARTMENT OF COMMERCE
United States Patent and Trademark Office
Address: COMMISSIONER FOR PATENTS
P.O. Box 1450
Alexandria, Virginia 22313-1450
www.uspto.gov

SHUMAKER & SIEFFERT, P.A
1625 RADIO DRIVE , SUITE 300
WOODBURY, MN 55125

Mail Date: 05/07/2010

Applicant	: Margaret Zielinski	: DECISION ON REQUEST FOR
Patent Number	: 7657011	: RECALCULATION of PATENT
Issue Date	: 02/02/2010	: TERM ADJUSTMENT IN VIEW
Application No	: 11/414,974	: OF WYETH AND NOTICE OF INTENT TO
Filed	: 05/01/2006	: ISSUE CERTIFICATE OF CORRECTION
		:

The Request for Recalculation is **GRANTED** to the extent indicated.

The patent term adjustment has been determined to be **947** days. The USPTO will *sua sponte* issue a certificate of correction reflecting the amount of PTA days determined by the recalculation.

Prior to the issuance of the certificate of correction, the USPTO will afford patentee an opportunity to be heard and request reconsideration. Accordingly, patentee has **one month or thirty (30) days**, whichever is longer, to file a request for reconsideration of this patent term adjustment calculation. See 35 U.S.C. 154(b)(3)(B)(ii) and 37 CFR 1.322(a)(4). No extensions of time will be granted under 37 CFR 1.136.

Patentee should use document code PET.OP if electronically filing a request for reconsideration of this patent term adjustment calculation. The patentee must also include the information required by 37 CFR 1.705(b)(2) and the fee required by 37 CFR 1.18(e). If patentee does not file a timely request for reconsideration of this patent term adjustment calculation including the information required by 37 CFR 1.705(b)(2) and the fee required by 37 CFR 1.18(e), the USPTO will issue a certificate of correction reflecting the PTA determination noted above.

Patentee should be aware that in order to preserve the right to review in the United States District Court for the District of Columbia of the USPTO patent term adjustment determination, patentee must ensure that he or she also take the steps required under 35 U.S.C. 154(b)(4)(A) in a timely manner. Nothing in the request for recalculation should be construed as providing an alternative time frame for commencing a civil action under 35 U.S.C. 154(b)(4)(A).

Any questions concerning this decision should be directed to the Office of Patent Legal Administration at 571-272-7702.

UNITED STATES PATENT AND TRADEMARK OFFICE

Commissioner for Patents
United States Patent and Trademark Office
P.O. Box 1450
Alexandria, VA 22313-1450
www.uspto.gov

JACKSON WALKER LLP
901 MAIN STREET
SUITE 6000
DALLAS TX 75202-3797

COPY MAILED

MAR 2 3 2007

OFFICE OF PETITIONS

In re Application of :
Knox, et al. :
Application No. 11/415,002 : ON PETITION
Deposited: May 1, 2006 :
Attorney Docket No. 126429.00004 :
For: ENGRAVING CYLINDER HAVING AN END ASSEMBLY

This is a decision on the petition under 37 CFR 1.137(b), filed October 27, 2006 (certificate of mailing date October 23, 2006). The petition will be treated under 37 CFR 1.182 as a request to accord the above-identified application a filing date of May 1, 2006.

The petition under 37 CFR 1.137(b) is **DISMISSED AS MOOT**.

The petition under 37 CFR 1.182 is **DISMISSED**.

Any request for reconsideration of this decision must be submitted within TWO (2) MONTHS from the mail date of this decision. Extensions of time under 37 CFR 1.136(a) are permitted. This is **not** final agency action within the meaning of 5 U.S.C. § 704.

A Notice of Incomplete Nonprovisional Application was mailed on May 23, 2006. Petitioners filed a response on August 29, 2006 (certificate of mailing date August 23, 2006). However, petitioners did not explicitly address the lack of a claim, which was the reason the application did not have a filing date.

On August 31, 2006, the USPTO mailed petitioner a Notice of Termination of Proceeding under 37 CFR 1.53(e), stating that the proceedings on the above-identified application had been terminated. The Notice indicated that the application did not meet the requirements of 37 CFR 1.53(b), (c) or (d) to be entitled to a filing date, and that the filing errors specified in the Notice mailed on May 23, 2006 were not timely corrected. The Office retained a $130.00 handling fee.

In response, petitioner filed the present petition to revive the application and paid a $750.00 fee. The Office notes that the proceedings have been terminated because the application was not entitled to a filing date; therefore, the application cannot become abandoned. Accordingly, the filing of a petition under 37 CFR 1.137(b) is inappropriate under the circumstances of this case. For this reason, the petition is **dismissed as moot**.

Petitioners are attempting to obtain a filing date for the above-identified application based on the fact that Great Britain Patent Application No. 0508864.6 was incorporated by reference when the the present application was deposited.

The Office allows an applicant to rely upon an incorporation by reference of a parent application when a portion of the child application has been inadvertently omitted. If the application is not entitled to a filing date without the missing material, a petition under 37 CFR 1.182 and the required petition fee, including an amendment submitting the necessary omitted material, requesting that the necessary omitted material contained in the prior application and submitted in the amendment, be included in the child application based upon the incorporation by reference statement , is required in order to accord the application a filing date as of the date of deposit of the child application. See MPEP 201.06(c).

The August 29, 2006 (certificate of mailing date August 23, 2006) correspondence taken with the petition under 37 CFR 1.137(b) will be treated as a petition under 37 CFR 1.182. The constructive petition under 37 CFR 1.182 lacks an amendment submitting the necessary omitted material, requesting that the necessary omitted material contained in the prior application and submitted in the amendment, be included in the subsequently filed application based upon the incorporation by reference statement.

In view of the above, the petition under 37 CFR 1.182 is **dismissed**.

Regarding fees: The $400.00 Rule 182 petition fee will be taken from the $750.00 Rule 137(b) petition fee. The balance of $350.00 and the $130.00 processing and retention fee will be credited to deposit account no. 50-1752. (All other fees were refunded when the August 31, 2006 Notice of Termination of Proceedings Under 37 CFR 1.53(d) was mailed. Once a filing date is granted, the Office of Initial Patent Examination will mail a Notice regarding any fees which are due.)

Further correspondence with respect to this matter should be addressed as follows:

By mail:

Mail Stop PETITION
Commissioner for Patents
Post Office Box 1450
Alexandria, VA 22313-1450

By hand: U.S. Patent and Trademark Office
Customer Service Window, Mail Stop Petition
Randolph Building
401 Dulany Street
Alexandria, VA 22314

By FAX: (571) 273-8300 - ATTN: Office of Petitions

Telephone inquiries specific to this matter should be directed to the undersigned at (571) 272-3230.

Shirene Willis Brantley
Senior Petitions Attorney
Office of Petitions
Office of the Deputy Commissioner
for Patent Examination Policy

UNITED STATES PATENT AND TRADEMARK OFFICE

Commissioner for Patents
United States Patent and Trademark Office
P.O. Box 1450
Alexandria, VA 22313-1450
www.uspto.gov

JACKSON WALKER LLP
901 MAIN STREET
SUITE 6000
DALLAS TX 75202-3797

COPY MAILED

DEC 0 6 2007

OFFICE OF PETITIONS

In re Application of
Knox, et al.
Application No. 11/415,002
Deposited: May 1, 2006
Atty Docket No. 126429.00004

: DECISION ON PETITION

This is a decision on the reconsideration petition under 37 CFR 1.182, filed May 29, 2007 (certificate of mailing date May 23, 2007), requesting that the Office accord the above-identified application a filing date of May 1, 2006.

The petition under 37 CFR 1.182 is **GRANTED**.

A Notice of Incomplete Nonprovisional Application was mailed on May 23, 2006. Petitioners filed a response on August 29, 2006 (certificate of mailing date August 23, 2006). However, petitioners did not explicitly address the lack of a claim, which was the reason the application did not have a filing date.

On August 31, 2006, the USPTO mailed petitioner a Notice of Termination of Proceeding under 37 CFR 1.53(e), stating that the proceedings on the above-identified application had been terminated. The Notice indicated that the application did not meet the requirements of 37 CFR 1.53(b), (c) or (d) to be entitled to a filing date, and that the filing errors specified in the Notice mailed on May 23, 2006 were not timely corrected. The Office retained a $130.00 handling fee.

On October 27, 2006, petitioner filed a petition under 37 CFR 1.137(b) to accord the above-identified application a filing date of May 1, 2006.

On March 23, 2007, the Office dismissed the petition under 37 CFR 1.137(b) as moot and dismissed the constructive petition under 37 CFR 1.182 to accord the above-identified application a filing date of May 1, 2006.

Petitioner desires to obtain a filing date for the above-identified application based on the fact that Great Britain Patent Application No. 0508864.6 was incorporated by reference when the present application was deposited.

In an application containing an explicit incorporation by reference statement in the specification or in a transmittal letter (if the transmittal letter was filed prior to September 21, 2004), a petition for the granting of a filing date may be made under 37 CFR 1.182. A petition under 37 CFR 1.182 and the required petition fee, including an amendment submitting the necessary omitted material, requesting that the necessary omitted material contained in the prior application and submitted in the amendment, be included in the subsequently filed application based upon the incorporation by reference statement, is required in order to accord the application a filing date as of the date of deposit of the subsequently filed application. An amendment submitting the omitted material and relying upon the incorporation by reference will not be entered in the subsequently filed application unless a decision granting the petition states that the application is accorded a filing date and that the amendment will be entered. See MPEP 201.06(c).

A review of the application as filed reveals that it included an explicit incorporation by reference of prior-filed application Great Britain Patent Application No. 0508864.6. The petition includes payment of the petition fee, an amendment submitting the omitted specification, claims and drawings.

In view thereof, the petition under §1.182 is **GRANTED**. The amendment will be entered in due course.

This application is being forwarded to the Office of Initial Patent Examination (OIPE) for accordation of a May 1, 2006 filing date, using the application papers received in the Office on that date and the specification, claims and drawings submitted by amendment on petition filed May 29, 2007 (certificate of mailing date May 23, 2007), and for indication in the records of the Office that the application contains five (5) sheets of drawings.

Applicants will receive appropriate notifications regarding the fees owed, if any, and other information in due course from OIPE.

Telephone inquiries specific to this matter should be directed to the undersigned at (571) 272-3230.

Shirene Willis Brantley
Senior Petitions Attorney
Office of Petitions
Office of the Deputy Commissioner
for Patent Examination Policy

UNITED STATES PATENT AND TRADEMARK OFFICE

Commissioner for Patents
United States Patent and Trademark Office
P.O. Box 1450
Alexandria, VA 22313-1450
www.uspto.gov

Hamilton, Brook, Smith & Reynolds, P.C.
530 Virginia Road
P.O. box 9133
Concord, MA 01742-9133

COPY MAILED

JUL 0 6 2007

OFFICE OF PETITIONS

In re Application of :
Thomas E. Gorsuch :
Application No. 11/415,003 : DECISION ON PETITION
Filed: May 1, 2006 : TO WITHDRAW
Attorney Docket No. TAN-2-1504.03.US : FROM RECORD
:

This is a decision on the Request to Withdraw as attorney or agent of record under 37 C.F.R. § 1.36(b), filed December 11, 2006.

The request is **NOT APPROVED** as moot.

A review of the file record indicates that the power of attorney to Hamilton, Brook, Smith & Reynolds, P.C. has been revoked by the assignee of the patent application on April 26, 2007. Accordingly, the request to withdraw under 37 C.F.R. § 1.36(b) is moot.

All future communications from the Office will continue to be directed to the below-listed address until otherwise notified by applicant.

Telephone inquires concerning this decision should be directed to Terri Williams at 571-272-2991.

T. Williams

Terri Williams
Petitions Examiner
Office of Petitions

cc: **Volpe and Koeing, P.C.**
Dept. ICC
United Plaza, Suite 1600
30 South 17th Street
Philadelphia, PA 19103

UNITED STATES PATENT AND TRADEMARK OFFICE

Commissioner for Patents
United States Patent and Trademark Office
P.O. Box 1450
Alexandria, VA 22313-1450
www.uspto.gov

HAMILTON, BROOK, SMITH & REYNOLDS, P.C.
530 VIRGINIA ROAD
P.O. BOX 9133
CONCORD MA 01742-9133

MAILED

MAR 0 8 2010

OFFICE OF PETITIONS

In re Application of	:	
Michael Kelly, et al.	:	
Application No. 11/415,007	:	DECISION ON PETITION
Filed: May 1, 2006	:	
Attorney Docket No. MIT 11456L	:	

This is a decision on the renewed petition under the unintentional provisions of 37 CFR 1.137(b), filed February 19, 2010, to revive the above-identified application.

The petition is **GRANTED**.

The application became abandoned for failure to reply in a timely manner to the Notice to File Missing Parts of Nonprovisional Application (Notice), mailed June 15, 2006. The Notice set a period for reply of two (2) months from the mail date of the Notice. No extensions of time under the provisions of 37 CFR 1.136(a) were obtained. Accordingly, the application became abandoned on September 16, 2006. The Notice of Abandonment was mailed September 14, 2007.

The petition satisfies the requirements of 37 CFR 1.137(b) in that petitioner has supplied (1) the reply in the form of $396 extra claim fee, (2) the petition fee of $810, and (3) a proper statement of unintentional delay.

It is not apparent whether the person signing the statement of unintentional delay was in a position to have firsthand or direct knowledge of the facts and circumstances of the delay at issue. Nevertheless, such statement is being treated as having been made as the result of a reasonable inquiry into the facts and circumstances of such delay. See 37 CFR 10.18(b) and Changes to Patent Practice and Procedure; Final Rule Notice, 62 Fed. Reg. 53131, 53178 (October 10, 1997), 1203 Off. Gaz. Pat. Office 63, 103 (October 21, 1997). In the event that such an inquiry has not been made, petitioner must make such an inquiry. If such inquiry results in the discovery that it is not correct that the entire delay in filing the required reply from the due date for the reply until the filing of a grantable petition pursuant to 37 CFR 1.137(b) was unintentional, petitioner must notify the Office.

Telephone inquiries concerning this decision should be directed to Terri Johnson at (571) 272-2991.

This application is being referred to the Office of Patent Application Processing for appropriate action on the reply received.

Terri Johnson
Petitions Examiner
Office of Petitions

UNITED STATES PATENT AND TRADEMARK OFFICE

Commissioner for Patents
United States Patent and Trademark Office
P.O. Box 1450
Alexandria, VA 22313-1450
www.uspto.gov

HAMILTON, BROOK, SMITH & REYNOLDS, P.C.
530 VIRGINIA ROAD
P.O. BOX 9133
CONCORD MA 01742-9133

MAILED

MAR 0 8 2010

OFFICE OF PETITIONS

In re Application of	:	
Michael Kelly, et al.	:	
Application No. 11/415,007	:	DECISION ON PETITION
Filed: May 1, 2006	:	
Attorney Docket No. MIT 11456L	:	

This is a decision on the petition filed to revive the above identified application.

The petition is **DISMISSED**.

The rules and statutory provisions governing the operations of the U.S. Patent and Trademark Office require payment of a fee on filing each petition to revive an abandoned application for patent based on unintentional delay or to accept an unintentionally delayed payment of a fee for issuing a patent. In this instance, the fee required by law is $1,620. If applicant can qualify as a "small entity" and does so prior to or together with the payment of the fee, the fee will be one-half of the amount indicated. See 37 CFR 1.27.

The petition in the above-identified application was not accompanied by payment of the required fee. No consideration on the merits can be given to the petition until the required fee is received.

The application file does not indicate a change of address has been filed in this case, although the address given on the petition differs from the address of record. A change of address should be filed in this case in accordance with MPEP 601.03. A courtesy copy of this decision is being mailed to the address noted on the petition. However, until otherwise instructed, all future correspondence regarding this application will be mailed solely to the address of record. Further correspondence with respect to this matter should be addressed as follows:

By mail: Mail Stop PETITIONS
Commissioner for Patents
Post Office Box 1450
Alexandria, VA 22313-1450

By hand: Customer Service Window
Mail Stop Petitions
Randolph Building
401 Dulany Street
Alexandria, VA 22314

By fax: (571) 273-8300
ATTN: Office of Petitions

Any questions concerning this matter may be directed to the undersigned at (571) 272-2991.

Terri Johnson
Petitions Examiner
Office of Petitions

cc: **JAMES WEIGAND**
60 STATE STREET, SUITE 700
BOSTON, MA 02109

UNITED STATES PATENT AND TRADEMARK OFFICE

Commissioner for Patents
United States Patent and Trademark Office
P.O. Box 1450
Alexandria, VA 22313-1450
www.uspto.gov

LAW OFFICES OF ERIC KARICH
2807 ST. MARK DR.
MANSFIELD TX 76063

COPY MAILED

JAN 0 3 2007

OFFICE OF PETITIONS

In re Application of :
Daniel R. Blount :
Application No. 11/415,009 : DECISION ON PETITION
Filed: May 1, 2006 : TO MAKE SPECIAL UNDER
Attorney Docket No. 0678-01UA : 37 CFR 1.102(c)(2)
:

This is a decision on the petition under 37 CFR 1.102(c) (2)(ii), filed May 1, 2006, to make the above-identified application special based on the invention materially contributing to the development or conservation of energy resources as set forth in M.P.E.P. § 708.02, Section VI.

The petition is **DISMISSED**.

A grantable petition to make an application special under 37 CFR 1.102(c)(ii) and MPEP § 708.02, Section VI: Energy, must state how the invention materially contributes to (A) the discovery or development of energy resources, or (b) the more efficient utilization and conservation of energy resources. If the disclosure is not clear on its face that the claimed invention materially contributes category (A) or (B), the petition must be accompanied by a statement by the applicant, assignee, or an attorney/agent registered to practice before the Office explaining how the materiality standard is met. Examples of inventions in category (A) would be developments in fossil fuels (natural gas, coal, and petroleum), hydrogen fuel technologies, nuclear energy, solar energy, etc. Category (B) would include inventions relating to the reduction of energy consumption in combustion systems, industrial equipment, household appliances, etc. No fee is required.

The instant petition fails to meet the materiality standard. That the instant invention, pertaining to a Clothes Dyer, draws air from outside the structure thereby potentially reducing the load on an air conditioner, does not in itself satisfy the materiality standard i.e., the instant the petition fails to state how the instant invention contributes in a significant, substantial, or noticeable manner to category (A) or (B). The instant petition does not clearly state the extent of any energy reduction achieved. Accordingly, any material contribution of the claimed invention to category (A) or (B) has not been persuasively shown.

Further correspondence with respect to this matter should be addressed as follows:

By Mail: Mail Stop PETITION
Commissioner for Patents

P. O. Box 1450
Alexandria, VA 22313-1450

By hand: U. S. Patent and Trademark Office
Customer Service Window, Mail Stop Petitions
Randolph Building
401 Dulany Street
Alexandria, VA 22314

By FAX: (571) 273-8300

Telephone inquiries concerning this decision should be directed to Ramesh Krishnamurthy at 571-272-4914, or to the undersigned at 571-272-7099.

All other inquiries concerning either the examination or status of the application should be directed to the Technology Center.

The application is being forwarded to the Technology Center Art Unit 3749 for action in its regular turn.

for David Bucci
Petitions Examiner
Office of Petitions

UNITED STATES PATENT AND TRADEMARK OFFICE

Commissioner for Patents
United States Patent and Trademark Office
P.O. Box 1450
Alexandria, VA 22313-1450
www.uspto.gov

LAW OFFICES OF ERIC KARICH
2807 ST. MARK DR.
MANSFIELD TX 76063

COPY MAILED

MAR 0 2 2007

OFFICE OF PETITIONS

In re Application of :
Daniel R. Blount :
Application No. 11/415,009 : DECISION ON PETITION
Filed: May 1, 2006 : TO MAKE SPECIAL UNDER
Attorney Docket No. 0678-01UA : 37 CFR 1.102(c)(2)
:

This is a decision on the request for reconsideration filed February 5, 2007 of petition under 37 CFR 1.102(c)(2)(ii), filed May 1, 2006, to make the above-identified application special based on the invention materially enhancing the quality of the environment as set forth in M.P.E.P. § 708.02, Section VI.

The petitions are **DISMISSED**.

A grantable petition to make an application special under 37 CFR 1.102(c)(2)(ii) and MPEP § 708.02, Section VI: Energy, must state that special status is sought because the invention materially contributes to (A) the discovery or development of energy resources, or (B) the more efficient utilization and conservation of energy resources. Examples of inventions in category (A) would be developments in fossil fuels (natural gas, coal, and petroleum), hydrogen fuel technologies, nuclear energy, solar energy, etc. Category (B) would include inventions relating to the reduction of energy consumption in combustion systems, industrial equipment, household appliances, etc. If the application disclosure is not clear on its face that the claimed invention materially contributes to category (A) or (B), the petition must be accompanied by a statement under 37 CFR 1.102 by the applicant, assignee, or an attorney/agent registered to practice before the Office explaining how the materiality standard is met. No fee is required.

The request for reconsideration nor the initial petition meet the materiality standard of 37 CFR 102(c)(2)(ii). Although the disclosure is pertaining to a clothes dryer, that draws air from outside of the structure thereby potentially reducing the load on an air conditioner, the materiality standard of the rule has not been met, i.e., petitioner has failed to state how the claimed invention contributes in a significant, substantial, or noticeable manner to the conservation of energy resources. Therefore, the issue is not whether use of un-conditioned air into a dryer is more energy efficient but rather how petitioner's inventions would contribute in a significant manner to the conservation of energy resources. Accordingly it has not been persuasively shown as to how the claimed invention would contribute in a significant manner to the more efficient utilization and conservation of energy resources.

This lack of meeting the materiality standards of 37 CFR 102(c)(2) (ii) does not permit the applicant to enjoy the benefit of advanced examination.

Further correspondence with respect to this matter should be addressed as follows:

By Mail: Mail Stop PETITION
Commissioner for Patents
P. O. Box 1450
Alexandria, VA 22313-1450

By hand: U. S. Patent and Trademark Office
Customer Service Window, Mail Stop Petitions
Randolph Building
401 Dulany Street
Alexandria, VA 22314

By FAX: (571) 273-8300

Telephone inquiries concerning this decision should be directed to Jefferey Harold at 571-272-7519, or to the undersigned at 571-272-7099.

All other inquiries concerning either the examination or status of the application should be directed to the Technology Center.

The application is being forwarded to the Technology Center Art Unit 3749 for action in its regular turn.

David Bucci
Petitions Examiner
Office of Petitions

UNITED STATES PATENT AND TRADEMARK OFFICE

Commissioner for Patents
United States Patent and Trademark Office
P.O. Box 1450
Alexandria, VA 22313-1450
www.uspto.gov

Julie K. Staple
Gifford, Krass, Groh, Sprinkle
Anderson & Citkowski, P.C.
PO Box 7021
Troy, MI 48007-7021

COPY MAILED
OCT 24 2006
OFFICE OF PETITIONS

In re Application of :
Roy J. Mankovitz. :
Application No. 11/415,034 : DECISION ON PETITION
Filed: May 1, 2006 : TO MAKE SPECIAL UNDER
Attorney Docket No. MRJ-12802/03 : 37 CFR 1.102(c)(1)
:

This is a decision on the petition under 37 CFR 1.102(c)(1), filed July 24, 2006, to make the above-identified application special based on applicant's age as set forth in M.P.E.P. § 708.02, Section IV.

The petition is **GRANTED**.

A grantable petition to make an application special under 37 CFR 1.102(c)(1) and MPEP § 708.02, Section IV: Applicant's Age, must be accompanied by evidence showing that at least one of the applicants is 65 years of age, or more, such as a birth certificate or a statement by applicant. No fee is required.

The instant petition includes a statement from the applicant declaring that he is 65 years of age or older. Accordingly, the above-identified application has been accorded "special" status.

Telephone inquiries concerning this decision should be directed to Terri Williams at 571-272-2991.

All other inquiries concerning either the examination or status of the application should be directed to the Technology Center.

The application is being forwarded to the Technology Center Art Unit 1761 for action on the merits commensurate with this decision.

David Bucci
Petitions Examiner
Office of Petitions

11 SEP 2006

UNITED STATES PATENT AND TRADEMARK OFFICE

Commissioner for Patents
United States Patent and Trademark Office
P.O. Box 1450
Alexandria, VA 22313-1450
www.uspto.gov

HOUSTON ELISEEVA
4 MILITIA DRIVE, SUITE 4
LEXINGTON MA 02421

In re Application of HECKER et al. Application No.: 11/415,041 PCT No.: PCT/EP04/052268 Filing Date: 01 May 2006 Attorney Docket No.: 21295.0132US1 For: ILLUMINATION MODULE FOR EVANESCENT ILLUMINATION AND MICROSCOPE	DECISION ON PETITION UNDER 37 CFR 1.137(b)

This application is before the PCT Legal Office for consideration of applicant's petition to revive under 37 CFR 1.137(b) filed on 01 May 2006.

BACKGROUND

On 22 September 2004, applicant filed international application PCT/EP04/52268, which claimed priority of an earlier German application filed 25 September 2003. The deadline for entry into national stage expired thirty months after the priority date or by midnight on 27 March 2006 (25 March 2006 was a Saturday and 26 March 2006 was a Sunday). Thereafter, the application went abandoned for failure to enter national stage in the U.S. before the expiration of the thirty month period.

On 01 May 2006, applicant filed transmittal letter requesting that the international application be treated as a continuation application. The transmittal letter indicated that the filing was a "Request for Filing a Continuation or Division of An International Application" under 37 CFR 1.53(b). An Application Data Sheet accompanied the transmittal letter with the required reference to the international application and international filing date. Applicants also filed the instant petition to revive. The application was assigned serial no. 11/415,041.

DISCUSSION

International application PCT/EP04/52268 became abandoned as to the United States of America after midnight on 27 March 2006 for failure to pay the basic national fee.

The transmittal letter filed on 01 May 2006 did not identify the application as a national stage application being filed under 35 U.S.C. 371 but requested filing under 37 CFR 1.53(b) as a continuation application of international application PCT/EP04/52268. The application is considered filed under 35 U.S.C. 111(a). Accordingly, the original papers deposited on 01 May 2006 are properly accepted as a filing under 35 U.S.C. 111(a).

On 01 May 2006, applicant also filed a petition under 37 CFR 1.137(b) to revive international application PCT/EP04/52268 as to the United States abandoned under 35 U.S.C. 371(d). The filing of the present continuing application under 35 U.S.C. 111(a) is accepted as the

All of the requirements of 37 CFR 1.137(b) for revival have been submitted. Applicants' statement that "the entire delay in filing the required reply from the due date for the required reply until the filing of a grantable petition under 37 CFR 1.137(b) was unintentional" meets the requirements of 37 CFR 1.137(b)(3).

International application PCT/EP04/52268 is being revived for purposes of continuity only and since continuity has been established by this decision reviving the international application, the international application is again abandoned in favor of the present continuing application 11/415,041.

The specification and claims filed on 01 May 2006 complete the requirements for a filing date under 35 U.S.C. 111(a). Accordingly, these applications will be accorded a filing date of 01 May 2006.

CONCLUSION

Applicant's petition to revive under 37 CFR 1.137(b) is **GRANTED**.

This application is being forwarded to Office of Initial Patent Examination for further processing as an application filed under 35 U.S.C. 111(a), having a filing date of 01 May 2006. The application will then be examined in due course.

Cynthia M. Kratz
Attorney Advisor
PCT Legal Office
Office of PCT Legal Administration

Telephone: (571)272-3286

UNITED STATES PATENT AND TRADEMARK OFFICE

Commissioner for Patents
United States Patent and Trademark Office
P.O. Box 1450
Alexandria, VA 22313-1450
www.uspto.gov

GAUTHIER & CONNORS, LLP
225 FRANKLIN STREET
SUITE 2300
BOSTON MA 02110

COPY MAILED

JUL 22 2008

In re Application of :
HOWELL, FRANK A :
Application No. 11/415,058 : DECISION ON PETITION
Filed: 05/01/2006 :
Attorney Docket No. 8198 :

This is a decision on the petition under 37 CFR 1.137(f), filed May 9, 2008, which is being treated as a petition under 37 CFR 1.137(b) to revive the present nonprovisional application for failure to timely notify the U.S. Patent and Trademark (USPTO) of the filing of an application in a foreign country, or under a multinational treaty that requires publication of applications eighteen months after filing. *See* 37 CFR 1.137(f).

The petition is **GRANTED**.

Petitioner states that the present nonprovisional application is the subject of an application filed in an eighteen-month publication country on March 30, 2007. However, the USPTO was unintentionally not notified of this filing within forty-five days subsequent to the filing of the subject application in an eighteen-month publication country. Accordingly, this application became abandoned pursuant to 35 U.S.C. 122(b)(2)(B)(iii) and 37 CFR 1.213(c) for failure to timely notify the Office of the filing of an application in a foreign country or under a multilateral international agreement that requires publication of applications eighteen months after filing.

A petition to revive an application abandoned pursuant to 35 U.S.C. 122(b)(2)(B)(iii) for failure to notify the USPTO of a foreign filing must be accompanied by:

(1) the required reply, which is met by the notification of such filing in a foreign country or under a multinational treaty;

(2) the petition fee as set forth in 37 CFR 1.17(m); and

(3) a statement that the entire delay in filing the required reply from the due date of the reply until the filing of a grantable petition was unintentional.

The present petition has been found to be in compliance with 37 CFR 1.137(b). Accordingly, the failure to timely notify the USPTO of a foreign or international filing within forty-five days after the date of filing of such foreign or international application as provided by 35 U.S.C. 122(b)(2)(B)(iii) and 37 CFR 1.213(c) is accepted as having been unintentionally delayed.

The previous Request and Certification under 35 U.S.C. 122(b)(2)(B)(i) has been rescinded. A Communication Regarding Rescission of Nonpublication Request and/or Notice of Foreign Filing, which sets forth the projected publication date of October 30, 2008, accompanies this decision on petition.

This matter is being referred to Technology Center Art Unit 3677.

Any inquiries concerning this decision may be directed to the undersigned at (571) 272-3211.

C. T. Donnell

Christina Tartera Donnell
Senior Petitions Attorney
Office of Petitions

Enclosure: Communication Regarding Rescission of Nonpublication Request and/or Notice of Foreign Filing

UNITED STATES PATENT AND TRADEMARK OFFICE

UNITED STATES DEPARTMENT OF COMMERCE
United States Patent and Trademark Office
Address: COMMISSIONER FOR PATENTS
P.O. Box 1450
Alexandria, Virginia 22313-1450
www.uspto.gov

APPLICATION NUMBER	FILING OR 371(C) DATE	FIRST NAMED APPLICANT	ATTY. DOCKET NO./TITLE
11/415,058	05/01/2006	Frank A. Howell	8198

CONFIRMATION NO. 4669

55740
GAUTHIER & CONNORS, LLP
225 FRANKLIN STREET
SUITE 2300
BOSTON, MA 02110

NONPUBLICATION RESCISSION LETTER

OC000000031111088

Date Mailed: 07/22/2008

Communication Regarding Rescission Of Nonpublication Request and/or Notice of Foreign Filing

Applicant's rescission of the previously-filed nonpublication request and/or notice of foreign filing is acknowledged. The paper has been reflected in the Patent and Trademark Office's (USPTO's) computer records so that the earliest possible projected publication date can be assigned.

The projected publication date is 10/30/2008.

If applicant rescinded the nonpublication request before or on the date of "foreign filing,"[1] then no notice of foreign filing is required.

If applicant foreign filed the application after filing the above application and before filing the rescission, and the rescission did not also include a notice of foreign filing, then a notice of foreign filing (not merely a rescission) is required to be filed within 45 days of the date of foreign filing. See 35 U.S.C. § 122(b)(2)(B)(iii), and Clarification of the United States Patent and Trademark Office's Interpretation of the Provisions of 35 U.S.C. § 122(b)(2)(B)(ii)-(iv), 1272 Off. Gaz. Pat. Office 22 (July 1, 2003).

If a notice of foreign filing is required and is not filed within 45 days of the date of foreign filing, then the application becomes abandoned pursuant to 35 U.S.C. § 122(b)(2)(B)(iii). In this situation, applicant should either file a petition to revive or notify the Office that the application is abandoned. See 37 CFR 1.137(f). Any such petition to revive will be forwarded to the Office of Petitions for a decision. Note that the filing of the petition will not operate to stay any period of reply that may be running against the application.

Questions regarding petitions to revive should be directed to the Office of Petitions at (571) 272-3282.

[1] Note, for purpose of this notice, that "foreign filing" means "filing an application directed to the same invention in another country, or under a multilateral international agreement, that requires publication of applications 18 months after filing".

/ctdonnell/

Office of Data Management, Application Assistance Unit (571) 272-4000, or (571) 272-4200, or 1-888-786-0101

UNITED STATES PATENT AND TRADEMARK OFFICE

COMMISSIONER FOR PATENTS
UNITED STATES PATENT AND TRADEMARK OFFICE
P.O. BOX 1450
ALEXANDRIA, VA 22313-1450
www.uspto.gov

11 APR 2007

SUGHRUE MION, PLLC
2100 PENNSYLVANIA AVENUE, N.W.
SUITE 800
WASHINGTON, DC 20037

In re Application of PORTNYKH et al :
U.S. Application No.: 11/415,090 :
Filing Date: May 2, 2006 : DECISION
Attorney Docket No.: Q94813 :

This is in response to applicant's "Petition Under 37 CFR § 1.47(a)" filed 22 November 2006 and "Supplemental Petition Under 37 CFR § 1.47(a)" filed 29 March 2007.

MPEP 602.05(a) states in relevant part,

> A continuation or divisional application of a prior application accorded status under 37 CFR 1.47 will be accorded status under 37 CFR 1.47 if a copy of the decision according 37 CFR 1.47 status in the prior application is filed in the continuation or divisional application, unless an oath or declaration signed by all of the inventors is included upon filing the continuation or divisional application. An oath or declaration in an application accorded status under 37 CFR 1.47 is generally not signed by all of the inventors. Accordingly, if a copy of an oath or declaration of a prior application is submitted in a continuation or divisional application filed under 37 CFR 1.53(b) and the copy of the oath or declaration omits the signature of one or more inventors, the Office of Initial Patent Examination (OIPE) should send a "Notice to File Missing Parts" requiring the signature of the nonsigning inventor, unless a copy of the decision according status under 37 CFR 1.47 is also included at the time of filing of the continuation or divisional application. If OIPE mails such a Notice, a copy of the decision according status under 37 CFR 1.47, together with a surcharge under 37 CFR 1.16(f) for its late filing, will be an acceptable reply to the Notice.

In the present case, applicant has supplied a copy of the declaration of the parent application and a copy of the decision according the parent application status under 37 CFR 1.47(a). Accordingly, the present application is granted status under 37 CFR 1.47(a). Because the copy of the decision was not supplied at the time of filing of the present application, the surcharge under 37 CFR 1.16(f) will be charged to Deposit Account No. 19-4880 as authorized in the present petition.

For the reasons above, the petition under 37 CFR 1.47(a) is DISMISSED AS MOOT.

As set forth in 37 CFR 1.47(a), a notice of the filing of this application will be forwarded to the nonsigning inventor at the last known address of record and will be published in the *Official Gazette*.

This application is being referred to the Office of Initial Patent Examination for continued processing.

Bryan Lin

Bryan Lin
PCT Legal Examiner
PCT Legal Office

Telephone: 571-272-3303
Facsimile: 571-273-0459

UNITED STATES PATENT AND TRADEMARK OFFICE

COMMISSIONER FOR PATENTS
UNITED STATES PATENT AND TRADEMARK OFFICE
P.O. BOX 1450
ALEXANDRIA, VA 22313-1450
www.uspto.gov

11 APR 2007

SUGHRUE MION, PLLC
2100 PENNSYLVANIA AVENUE, N.W.
SUITE 800
WASHINGTON, DC 20037

In re Application of PORTNYKH et al :
U.S. Application No.: 11/415,091 :
Filing Date: May 2, 2006 : DECISION
Attorney Docket No.: Q94812 :

This is in response to applicant's "Petition Under 37 CFR § 1.47(a)" filed 22 November 2006 and "Supplemental Petition Under 37 CFR § 1.47(a)" filed 29 March 2007.

MPEP 602.05(a) states in relevant part,

> A continuation or divisional application of a prior application accorded status under 37 CFR 1.47 will be accorded status under 37 CFR 1.47 if a copy of the decision according 37 CFR 1.47 status in the prior application is filed in the continuation or divisional application, unless an oath or declaration signed by all of the inventors is included upon filing the continuation or divisional application. An oath or declaration in an application accorded status under 37 CFR 1.47 is generally not signed by all of the inventors. Accordingly, if a copy of an oath or declaration of a prior application is submitted in a continuation or divisional application filed under 37 CFR 1.53(b) and the copy of the oath or declaration omits the signature of one or more inventors, the Office of Initial Patent Examination (OIPE) should send a "Notice to File Missing Parts" requiring the signature of the nonsigning inventor, unless a copy of the decision according status under 37 CFR 1.47 is also included at the time of filing of the continuation or divisional application. If OIPE mails such a Notice, a copy of the decision according status under 37 CFR 1.47, together with a surcharge under 37 CFR 1.16(f) for its late filing, will be an acceptable reply to the Notice.

In the present case, applicant has supplied a copy of the declaration of the parent application and a copy of the decision according the parent application status under 37 CFR 1.47(a). Accordingly, the present application is granted status under 37 CFR 1.47(a).

For the reasons above, the petition under 37 CFR 1.47(a) is DISMISSED AS MOOT.

As set forth in 37 CFR 1.47(a), a notice of the filing of this application will be forwarded to the nonsigning inventor at the last known address of record and will be published in the *Official Gazette*.

This application is being referred to the Office of Initial Patent Examination for continued processing.

Bryan Lin

Bryan Lin
PCT Legal Examiner
PCT Legal Office

Telephone: 571-272-3303
Facsimile: 571-273-0459

UNITED STATES PATENT AND TRADEMARK OFFICE

COMMISSIONER FOR PATENTS
UNITED STATES PATENT AND TRADEMARK OFFICE
P.O. BOX 1450
ALEXANDRIA, VA 22313-1450
www.uspto.gov

SUGHRUE MION, PLLC
2100 PENNSYLVANIA AVENUE, N.W.
SUITE 800
WASHINGTON DC 20037

COPY MAILED

JAN 22 2007

OFFICE OF PETITIONS

In re Application of	
Portnykh, et al.	DECISION REFUSING STATUS
Application No. 11/415,096	UNDER 37 CFR 1.47(a)
Filed: May 2, 2006	
Atty. Dkt. No.: Q94814	
For: APPARATUS AND METHOD FOR ORGANIZATION AND INTERPRETATION OF MULTIMEDIA DATA ON A RECORDING MEDIUM	

This decision is in response to the petition under 37 CFR 1.47(a) filed November 22, 2006.

The petition under 37 CFR 1.47(a) is **DISMISSED**.

Petitioners are given TWO MONTHS from the mailing date of this decision to reply, correcting the below-noted deficiencies. Any reply should be entitled "Request for Reconsideration of Petition Under 37 CFR 1.47(a)," and should only address the deficiencies noted herein. The reply under 37 CFR 1.47(a) may include an oath or declaration executed by the non-signing inventors. Any extensions of time will be governed by 37 CFR 1.136(a).

The above-identified application was filed without an executed oath or declaration. Accordingly, a Notice to File Missing Parts of Nonprovisional Application (Notice) was mailed June 1, 2006. The Notice required a surcharge and an executed oath or declaration.

A grantable petition under 37 CFR 1.47(a) requires: (1) proof that the non-signing inventor cannot be reached or refuses to sign the oath or declaration after having been presented with the application papers (specification, claims and drawings); (2) an acceptable oath or declaration in compliance with 35 U.S.C. §§ 115 and 116; (3) the petition fee; and (4) a statement of the last known address of the non-signing inventor.

At to item (1), petitioners have failed to establish that the non-signing inventor received a complete copy of the application papers (specification, including claims, drawings, and oath or

declaration) and thereafter refused to execute an oath or declaration, or, that the non-signing inventor cannot be reached or located for presentation of the application papers.

Petitioners allege that the non-signing inventor received a complete copy of the application papers for the instant application and thereafter refused to execute the declaration. However, the copy of the e-mail from the inventor does not refer to the instant application and, in fact, refers to U.S. App. No. 10/559,374. A review of Office records does not reveal that the '374 application has been accorded Rule 47 status.

Accordingly, petitioners are reminded that before a refusal to sign an oath or declaration can be alleged, it must be demonstrated that a *bona fide* effort has been made to present a complete copy of the application papers (specification, including claims, drawings, and oath or declaration) to the non-signing inventor at the non-signing inventor's last known address, typically a residential address.

Any renewed petition should be accompanied by evidence to establish that the non-signing inventor was sent a complete copy of the application papers (specification, claims, drawings, and oath or declaration) and thereafter refused to execute the declaration. Petitioners may wish to provide the Office copies of letters sent to the inventor indicating the enclosure of the application papers (specification, claims, drawings, and oath or declaration). If after the inventor receives the application papers and requests to execute the oath or declaration are refused, these facts should be set forth in a statement of facts signed by the person to whom the refusals were made and detailing with specificity the exact manner of the refusals. If a written refusal has been made, a copy of the written refusal should be included on renewed petition.

Further correspondence with respect to this matter should be addressed as follows:

By mail:
Mail Stop Petition
Commissioner for Patents
P.O. Box 1450
Alexandria, VA 22313-1450

By facsimile:
(571) 273-8300

By hand:
U.S. U.S. Patent and Trademark Office
Customer Service Window
Mail Stop Petition

Randolph Building
401 Dulaney Street
Alexandria, VA 22314

Telephone inquiries related to this decision may be directed to the undersigned at (571) 272-3205.

Alesia M. Brown
Petitions Attorney
Office of Petitions

UNITED STATES PATENT AND TRADEMARK OFFICE

COMMISSIONER FOR PATENTS
UNITED STATES PATENT AND TRADEMARK OFFICE
P.O. BOX 1450
ALEXANDRIA, VA 22313-1450
www.uspto.gov

SUGHRUE MION, PLLC
2100 PENNSYLVANIA AVENUE, N.W.
SUITE 800
WASHINGTON DC 20037

COPY MAILED

APR 18 2007

OFFICE OF PETITIONS

In re Application of :
Portnykh, et al. : DECISION REFUSING STATUS
Application No. 11/415,096 : UNDER 37 CFR 1.47(a)
Filed: May 2, 2006 :
Atty. Dkt. No.: Q94814 :
For: APPARATUS AND METHOD FOR :
ORGANIZATION AND INTERPRETATION :
OF MULTIMEDIA DATA ON A :
RECORDING MEDIUM :

This decision is in response to the renewed petition under 37 CFR 1.47(a) filed March 22, 2007.

The petition under 37 CFR 1.47(a) is **DISMISSED**.

Petitioners are given TWO MONTHS from the mailing date of this decision to reply, correcting the below-noted deficiencies. Any reply should be entitled "Request for Reconsideration of Petition Under 37 CFR 1.47(a)," and should only address the deficiencies noted herein. The reply under 37 CFR 1.47(a) may include an oath or declaration executed by the non-signing inventors. Any extensions of time will be governed by 37 CFR 1.136(a).

The above-identified application was filed without an executed oath or declaration. Accordingly, a Notice to File Missing Parts of Nonprovisional Application (Notice) was mailed June 1, 2006. The Notice required a surcharge and an executed oath or declaration.

The instant petition has not been reviewed on the merits as it fails to comply with 37 CFR 1.33(b) in that the petition is not signed. Any renewed petition must comply with the requirements of 37 CFR 1.33.

Further correspondence with respect to this matter should be addressed as follows:

By mail: Mail Stop Petition
Commissioner for Patents
P.O. Box 1450

Alexandria, VA 22313-1450

By facsimile: (571) 273-8300

By hand: U.S. U.S. Patent and Trademark Office
Customer Service Window
Mail Stop Petition
Randolph Building
401 Dulaney Street
Alexandria, VA 22314

Telephone inquiries related to this decision may be directed to the undersigned at (571) 272-3205.

Alesia M. Brown
Petitions Attorney
Office of Petitions

UNITED STATES PATENT AND TRADEMARK OFFICE

COMMISSIONER FOR PATENTS
UNITED STATES PATENT AND TRADEMARK OFFICE
P.O. BOX 1450
ALEXANDRIA, VA 22313-1450
www.uspto.gov

SUGHRUE MION, PLLC
2100 PENNSYLVANIA AVENUE, N.W.
SUITE 800
WASHINGTON DC 20037

COPY MAILED

JUN 21 2007

OFFICE OF PETITIONS

In re Application of	:
Portnykh, et al.	: DECISION GRANTING STATUS
Application No. 11/415,096	: UNDER 37 CFR 1.47(a)
Filed: May 2, 2006	:
Atty. Dkt. No.: Q94814	:
For: APPARATUS AND METHOD FOR	:
ORGANIZATION AND INTERPRETATION	:
OF MULTIMEDIA DATA ON A	:
RECORDING MEDIUM	:

This decision is in response to the renewed petition under 37 CFR 1.47(a) filed May 15, 2007.

The petition is hereby **GRANTED**.

A review of the official application file reveals that the instant application is a continuation of U.S. App. No. 10/559,374 and that said application was accorded Rule 47 status.

In accordance with 37 CFR 1.63(d)(3), where the executed oath or declaration of which a copy is submitted for a continuation or divisional application was originally filed in a prior application accorded status under § 1.47, the copy of the executed oath or declaration for such prior application must be accompanied by: (i) A copy of the decision granting a petition to accord § 1.47 status to the prior application, unless all inventors or legal representatives have filed an oath or declaration to join in an application accorded status under § 1.47 of which the continuation or divisional application claims a benefit under 35 U.S.C. 120, 121, or 365(c); and (ii) If one or more inventor(s) or legal representative(s) who refused to join in the prior application or could not be found or reached has subsequently joined in the prior application or another application of which the continuation or divisional application claims a benefit under 35 U.S.C. 120, 121, or 365(c), a copy of the subsequently executed oath(s) or declaration(s) filed by the inventor or legal representative to join in the application.

A copy of the declaration and decision according Rule 47 status in application No. 10/559,374 have been placed in the official application file of the instant application.

As Rule 1.47(a) status was granted in the prior application, this application is hereby accorded Rule 1.47(a) status.

As provided in Rule 1.47(c), since notice was provided after the grant of Rule 1.47(a) status in the prior application, the Office is dispensing with the notice provision in this continuation application.

This application is being returned to the Office of Initial Patent Examination for further processing.

Telephone inquiries regarding this matter should be directed to the undersigned at (571) 272-3205.

Alesia M. Brown
Petitions Attorney
Office of Petitions

0 2 MAR 2007

UNITED STATES PATENT AND TRADEMARK OFFICE

Commissioner for Patents
United States Patent and Trademark Office
P.O. Box 1450
Alexandria, VA 22313-1450
www.uspto.gov

SUGHRUE MION, PLLC
2100 PENNSYLVANIA AVENUE, N.W.
SUITE 800
WASHINGTON DC 20037

In re Application of:
PORTNYKH, Vladimir, et al.
U.S. Application No.: 10/559,374
PCT No.: PCT/KR2004/000489
Int'l Filing Date: 10 March 2004
Priority Date: 07 June 2003
Attorney's Docket No.: Q76716
For: APPARATUS AND METHOD FOR ORGANIZATION AND INTER-PRETATION OF MULTIMEDIA DATA ON A RECORDING MEDIUM

DECISION ON PETITION
(37 CFR 1.47(a))

This decision is issued in response to applicants' petition under 37 CFR 1.47(a) filed 22 November 2006. Applicants have submitted $130 as the petition fee; however, the appropriate petition fee is $200. Deposit Account No. 19-4880 will be charged the additional $70 required to complete the petition fee.

BACKGROUND

On 10 March 2004, applicants filed international application PCT/KR2004/000489. The international application claimed a priority date of 07 June 2003, and it designated the United States. On 16 December 2004, the International Bureau (IB) communicated a copy of the international application to the United States Patent and Trademark Office (USPTO). The deadline for submission of the basic national fee was thirty months from the priority date, i.e., 07 December 2005.

On 06 December 2005, applicants filed a Transmittal Letter for entry into the U.S. national stage accompanied by, among other materials, payment of the basic national fee and a declaration executed by three of the four inventors (the declaration was not executed by inventor Vladimir PROTNYKH).

On 14 April 2006, the United States Designated/Elected Office (DO/EO/US) mailed a Notification Of Acceptance (Form PCT/DO/EO/903) indicating that the requirements of 35 U.S.C. 371(c)(1), (c)(2), and (c)(4) were satisfied as of 06 December 2005. On the same date, a filing receipt was mailed identifying 06 December 2005 as the date under 35 U.S.C. 371(c).

On 22 November 2006, applicants filed the petition considered herein, requesting acceptance of the application without the signature of co-inventor Vladimir PRTNYKH, whom applicants assert cannot be reached or located after diligent effort.

DISCUSSION

A grantable petition under 37 CFR 1.47(a) must be accompanied by: (1) the fee under 37 CFR 1.17; (2) a statement of the last known address of the non-signing inventor; (3) an oath or declaration by the other inventors on behalf of the other inventors on behalf of themselves and the non-signing inventor; and (4) factual proof that the inventor refuses to execute the application or cannot be reached after diligent effort.

Applicants here have submitted the required petition fee, and the petition sets forth the last known addresses of the non-signing inventors. Accordingly, items (1) and (2) are satisfied.

Regarding item (3), section 409.03(a) of the Manual of Patent Examining Practice (MPEP) states that:

> An oath or declaration signed by all the available joint inventors with the signature block of the nonsigning inventor(s) left blank may be treated as having been signed by all the joint inventors on behalf of the nonsigning inventor(s), unless otherwise indicated.

Here, applicants filed, on 06 December 2005, a declaration executed by three of the four inventors and including an unsigned signature box identifying the non-signing inventor. This declaration may be treated as having been executed by the available inventors on their own behalf and on behalf of the non-signing inventor. Item (3) is therefore satisfied.

Regarding item (4), the petition asserts that the non-signing inventor has refused to execute the declaration. Where it is asserted that an inventor has refused to execute the application papers, section 409.03(d) of the MPEP states that a "copy of the application papers should be sent to the last known address of the nonsigning inventor, or, if the nonsigning inventor is represented by counsel, to the address of the nonsigning inventor's attorney." The MPEP also requires "a statement of facts by the person who presented the inventor with the application papers and/or to whom the refusal was made." Here, applicants have provided firsthand statements from Tracy Johnson and Darryl Mexic, with accompanying documentary support, demonstrating that a copy of the complete application was forwarded to the inventor, and that the inventor expressly refused to sign the required declaration. Item (4) is therefore satisfied.

Based on the above, applicants have satisfied all the requirements for a grantable petition under 37 CFR 1.47(a).

CONCLUSION

Applicants' petition under 37 CFR 1.47(a) is **GRANTED**.

The application is accepted without the signature of inventor Vladimir PORTNYKH.

A notice of the acceptance of the application will be published in the Official Gazette, and a letter informing the inventors of the application will be forwarded to the non-signing inventor at his last-known address, as set forth in the petition.

It is noted that, based on the granting of the present petition, the Notification Of Acceptance and filing receipt mailed 14 April 2006 correctly identify the date under 35 U.S.C. 371(c)(1), (c)(2), and (c)(4) as 06 December 2005.

Richard M. Ross
Attorney Advisor
Office of PCT Legal Administration
Telephone: (571) 272-3296
Facsimile: (571) 273-0459

UNITED STATES PATENT AND TRADEMARK OFFICE

UNITED STATES DEPARTMENT OF COMMERCE
United States Patent and Trademark Office
Address: COMMISSIONER FOR PATENTS
P.O. Box 1450
Alexandria, Virginia 22313-1450
www.uspto.gov

APPLICATION NO.	FILING DATE	FIRST NAMED INVENTOR	ATTORNEY DOCKET NO.	CONFIRMATION NO.
11/415,096	05/02/2006	Vladimir Portnykh	Q94814	3728

23373 7590 04/06/2009

SUGHRUE MION, PLLC
2100 PENNSYLVANIA AVENUE, N.W.
SUITE 800
WASHINGTON, DC 20037

EXAMINER	
QUELER, ADAM M	

ART UNIT	PAPER NUMBER
2178	

MAIL DATE	DELIVERY MODE
04/06/2009	PAPER

Please find below and/or attached an Office communication concerning this application or proceeding.

The time period for reply, if any, is set in the attached communication.

UNITED STATES PATENT AND TRADEMARK OFFICE

COMMISSIONER FOR PATENTS
UNITED STATES PATENT AND TRADEMARK OFFICE
P.O. BOX 1450
ALEXANDRIA, VA 22313-1450
www.uspto.gov

SUGHRUE MION, PLLC
2100 PENNSYLVANIA AVENUE, N.W.
SUITE 800
WASHINGTON DC 20037

In re Application of: PORTNYKH et al.
Application No. 11/415,096
Attorney Docket No. Q94814
Filed: May 2, 2006
For: APPARATUS AND METHOD FOR ORGANIZATION AND INTERPRETATION OF MULTIMEDIA DATA ON A RECORDING MEDIUM AND ORGANIZATION OF ITS DISPLAY

DECISION ON PETITION

This is a decision on the petition filed on January 14, 2009, requesting that the Non-Final action mailed on October 7, 2008 be reissued with a reset date, since the office action was not received by applicant. The petition is being treated as a petition under 37 C.F.R. § 1.181.

The petition is hereby **GRANTED**.

Applicable Prosecution History

May 2, 2006 Application filed.

October 7, 2008 Non-Final action mailed.

January 14, 2009 Instant Petition filed

RELIEF REQUESTED

The instant petition requests that the Non-Final action mailed October 7, 2008 be reissued with a reset date, since the action was not received by Applicant, and was discovered in PAIR.

REGULATIONS AND PRACTICE

MPEP 710.06 [R-6] Situations When Reply Period Is Reset or Restarted, states in part: The Office will grant a petition to restart the previously set period for reply to an Office action to run from the date of receipt of the Office action at the correspondence address

when the following criteria are met:
(A) the petition is filed within 2 weeks of the date of receipt of the Office action at the correspondence address;
(B) a substantial portion of the set reply period had elapsed on the date of receipt (e.g., at least 1 month of a 2- or 3-month reply period had elapsed); and
(C) the petition includes (1) evidence showing the date of receipt of the Office action at the correspondence address (e.g., a copy of the Office action having the date of receipt of the Office action at the correspondence address stamped thereon, a copy of the envelope (which contained the Office action) having the date of receipt of the Office action at the correspondence address stamped thereon, etc.), and (2) a statement setting forth the date of receipt of the Office action at the correspondence address and explaining how the evidence being presented establishes the date of receipt of the Office action at the correspondence address.

MPEP 711.03(c) states in part:
To minimize costs and burdens to practitioners and the Office, the Office has modified the showing required to establish nonreceipt of an Office action. The showing required to establish nonreceipt of an Office communication must include a statement from the practitioner **>describing the system used for recording an Office action received at the correspondence address of record with the USPTO. The statement should establish that the docketing system is sufficiently reliable. It is expected that the record would include, but not be limited to, the application number, attorney docket number, the mail date of the Office action and the due date for the response.

Practitioner must state that the Office action was not received at the correspondence address of record, and that a search of the practitioner's record(s), including any file jacket or the equivalent, and the application contents, indicates that the Office action was not received. A copy of the record(s) used by the practitioner where the non-received Office action would have been entered had it been received is required.

A copy of the practitioner's record(s) required to show non-receipt of the Office action should include the master docket for the firm. That is, if a three month period for reply was set in the nonreceived Office action, a copy of the master docket report showing all replies docketed for a date three months from the mail date of the nonreceived Office action must be submitted as documentary proof of nonreceipt of the Office action. If no such master docket exists, the practitioner should so state and provide other evidence such as, but not limited to, the following: the application file jacket; incoming mail log; calendar; reminder system; or the individual docket record for the application in question.<

DECISION

Petitioner asserts that the Office communication (FAOM) mailed on October 7, 2008 was not received by applicants, and states the following:

1. Applicant's representative discovered that the Action mailed on October 7, 2008 was entered in this application via the PAIR system.
2. Upon discovery of the above office action, Applicant's representative checked their records.
3. Applicant's representative enclose a copy of the incoming mail log for PTO Actions, in support of their position.

The petition filed on March 12, 2009, is in compliance with the above-stated requirements.

The instant petition does not state when the action was actually received by Petitioners. However, the undersigned confirmed with Mr. Lenny Jiang, in a telephone conversation initiated by the undersigned on April 3, 2009, that the Non-Final (FAOM) action was downloaded by Applicants from PAIR on January 13, 2009.

The instant petition was filed on January 14, 2009, within the 2 week period from receipt of the office action. A substantial portion of the set reply period had elapsed on the date of receipt.

For reasons set forth above, the petition is **GRANTED**.

Accordingly, the shortened statutory period that was originally set forth in the Office communication originally mailed on October 7, 2008 is hereby reset to run FROM THE RECEIPT DATE OF January 13, 2009. A courtesy copy of the office action is attached herewith.

Any inquiry concerning this decision should be directed to the undersigned whose telephone number is (571) 272-4210.

/Mano Padmanabhan/

Mano Padmanabhan
Quality Assurance Specialist, WG 2180
Technology Center 2100,
Computer Architecture, Software, and Information Security

UNITED STATES PATENT AND TRADEMARK OFFICE

UNITED STATES DEPARTMENT OF COMMERCE
United States Patent and Trademark Office
Address: COMMISSIONER FOR PATENTS
P.O. Box 1450
Alexandria, Virginia 22313-1450
www.uspto.gov

APPLICATION NO.	FILING DATE	FIRST NAMED INVENTOR	ATTORNEY DOCKET NO.	CONFIRMATION NO.
11/415,096	05/02/2006	Vladimir Portnykh	Q94814	3728

23373 7590 10/07/2008

SUGHRUE MION, PLLC
2100 PENNSYLVANIA AVENUE, N.W.
SUITE 800
WASHINGTON, DC 20037

EXAMINER	
QUELER, ADAM M	

ART UNIT	PAPER NUMBER
2178	

MAIL DATE	DELIVERY MODE
10/07/2008	PAPER

Please find below and/or attached an Office communication concerning this application or proceeding.

The time period for reply, if any, is set in the attached communication.

Office Action Summary	Application No.	Applicant(s)	
	11/415,096	PORTNYKH ET AL.	
	Examiner	Art Unit	
	ADAM M. QUELER	2178	

-- The MAILING DATE of this communication appears on the cover sheet with the correspondence address --

Period for Reply

A SHORTENED STATUTORY PERIOD FOR REPLY IS SET TO EXPIRE 3 MONTH(S) OR THIRTY (30) DAYS, WHICHEVER IS LONGER, FROM THE MAILING DATE OF THIS COMMUNICATION.

- Extensions of time may be available under the provisions of 37 CFR 1.136(a). In no event, however, may a reply be timely filed after SIX (6) MONTHS from the mailing date of this communication.
- If NO period for reply is specified above, the maximum statutory period will apply and will expire SIX (6) MONTHS from the mailing date of this communication.
- Failure to reply within the set or extended period for reply will, by statute, cause the application to become ABANDONED (35 U.S.C. § 133). Any reply received by the Office later than three months after the mailing date of this communication, even if timely filed, may reduce any earned patent term adjustment. See 37 CFR 1.704(b).

Status

1)☒ Responsive to communication(s) filed on *24 September 2008*.

2a)☐ This action is **FINAL**. 2b)☒ This action is non-final.

3)☐ Since this application is in condition for allowance except for formal matters, prosecution as to the merits is closed in accordance with the practice under *Ex parte Quayle*, 1935 C.D. 11, 453 O.G. 213.

Disposition of Claims

4)☒ Claim(s) *41-59* is/are pending in the application.

4a) Of the above claim(s) _____ is/are withdrawn from consideration.

5)☐ Claim(s) _____ is/are allowed.

6)☒ Claim(s) *41-59* is/are rejected.

7)☐ Claim(s) _____ is/are objected to.

8)☐ Claim(s) _____ are subject to restriction and/or election requirement.

Application Papers

9)☐ The specification is objected to by the Examiner.

10)☐ The drawing(s) filed on _____ is/are: a)☐ accepted or b)☐ objected to by the Examiner.

Applicant may not request that any objection to the drawing(s) be held in abeyance. See 37 CFR 1.85(a).

Replacement drawing sheet(s) including the correction is required if the drawing(s) is objected to. See 37 CFR 1.121(d).

11)☐ The oath or declaration is objected to by the Examiner. Note the attached Office Action or form PTO-152.

Priority under 35 U.S.C. § 119

12)☐ Acknowledgment is made of a claim for foreign priority under 35 U.S.C. § 119(a)-(d) or (f).

a)☐ All b)☐ Some * c)☐ None of:

1.☐ Certified copies of the priority documents have been received.

2.☐ Certified copies of the priority documents have been received in Application No. _____.

3.☐ Copies of the certified copies of the priority documents have been received in this National Stage application from the International Bureau (PCT Rule 17.2(a)).

* See the attached detailed Office action for a list of the certified copies not received.

Attachment(s)

1) ☒ Notice of References Cited (PTO-892)
2) ☐ Notice of Draftsperson's Patent Drawing Review (PTO-948)
3) ☒ Information Disclosure Statement(s) (PTO/SB/08) Paper No(s)/Mail Date *9/24/08*.
4) ☐ Interview Summary (PTO-413) Paper No(s)/Mail Date. _____.
5) ☐ Notice of Informal Patent Application
6) ☐ Other: _____.

DETAILED ACTION

1. This action is responsive to communications: RCE filed 8/12/20008, Supplemental Amendment filed 09/24/2008, and IDS filed 08/11/2008.

2. Claims 41-59 are pending in the case. Claims 41 and 51 are independent claims.

Continued Examination Under 37 CFR 1.114

3. A request for continued examination under 37 CFR 1.114, including the fee set forth in 37 CFR 1.17(e), was filed in this application after final rejection. Since this application is eligible for continued examination under 37 CFR 1.114, and the fee set forth in 37 CFR 1.17(e) has been timely paid, the finality of the previous Office action has been withdrawn pursuant to 37 CFR 1.114. Applicant's submission filed on 8/12/2008 has been entered.

Claim Rejections - 35 USC § 103

4. The following is a quotation of 35 U.S.C. 103(a) which forms the basis for all obviousness rejections set forth in this Office action:

> (a) A patent may not be obtained though the invention is not identically disclosed or described as set forth in section 102 of this title, if the differences between the subject matter sought to be patented and the prior art are such that the subject matter as a whole would have been obvious at the time the invention was made to a person having ordinary skill in the art to which said subject matter pertains. Patentability shall not be negatived by the manner in which the invention was made.

5. This application currently names joint inventors. In considering patentability of the claims under 35 U.S.C. 103(a), the examiner presumes that the subject matter of the various claims was commonly owned at the time any inventions covered therein were made absent any evidence to the contrary. Applicant is advised of the obligation under 37 CFR 1.56 to point out the inventor and invention dates of each claim that was not commonly owned at the time a later invention was made in order for the examiner to consider the applicability of 35 U.S.C. 103(c) and potential 35 U.S.C. 102(e), (f) or (g) prior art under 35 U.S.C. 103(a).

6. Claims 41-43, 46-52, and 55-59 are rejected under 35 U.S.C. 103(a) as being unpatentable over "MPV Core Specification, Revision 1.01" by OSTA.org, hereinafter OSTA.

Regarding independent claim(s) 41, OSTA teaches:

A asset element for display comprising audio data and photo data (§6.10);

Reference information (StillWithAudioRef) needed for displaying the elements above (§6.17). The reference information intended to be used to search the elements (id is the foreign key, idRef is the corresponding reference of the id, §3.1, last paragraph, 5.4). The reference information refers to identification information to identify the asset (idRef).

Location information, intended to be obtained so it could be used, related to the one or more video data and the one or more photo data from the searched elements (lastURL, §5.7, used in §6.11 and §6.7);

Time information, that is instructions on how to display the data when it is displayed (§6.10, "CaptureDur").

OSTA does not teach displaying the audio and photo in accordance with the time information. It would have been obvious to one of ordinary skill in the art at the time of the invention to display the video and photo by use of the time information as that was the intended use of the meta-data as described above.

OSTA does not teach the obtaining of reference information and location information, but does teach their use was needed for display as described above. It would have been obvious to one of ordinary skill in the art at the time of the invention to obtain the both the location and

reference information because its use was desired (as described above) and the obtaining would have been necessary in order to use the information.

OSTA does not teach searching the asset element using the reference information, however does not teach that is intended to be used to search as described above. It would have been obvious to one of ordinary skill in the art at the time of the invention to search the asset element using the reference information because that was the intended use of the reference information.

Regarding independent claim(s) 51, OSTA teaches:

A asset element for display comprising audio data and photo data (§6.10);

Reference information (StillWithAudioRef) needed for displaying the audio and photo data above (§6.17). The reference information refers to identification information to identify the asset (idRef).

Location information, intended to be obtained so it could be used, related to the one or more video data and the one or more photo data from the searched elements (lastURL, §5.7, used in §6.11 and §6.7);

Time information, that is instructions on how to display the data when it is displayed (§6.10, "CaptureDur").

OSTA is a specification, and discloses varies elements and attributes that intended to be used together to define an asset, but does not specifically disclose the generation of a document including metadata containing all the above elements. It would have been obvious to one of ordinary skill in the art at the time of the invention to generate a document containing these elements and attributes, so that they could be extracted and used for display. This would have

been desired because the reference is specifically instructions for the generation of such a document (for example, §3.1).

OSTA does not teach displaying the audio and photo in accordance with the time information. It would have been obvious to one of ordinary skill in the art at the time of the invention to display the video and photo by use of the time information as that was the intended use of the meta-data as described above.

OSTA does not teach the obtaining of reference information and location information, but does teach their use was needed for display as described above. It would have been obvious to one of ordinary skill in the art at the time of the invention to obtain the both the location and reference information because its use was desired (as described above) and the obtaining would have been necessary in order to use the information.

Regarding dependent claim(s) 42, OSTA does not teach checking that the element is a single element comprising audio and photo data. It is recognized that any processing of the element, would require a check to confirm the type of element that it is. Therefore, it would have been obvious to one of ordinary skill in the art at the time of the invention to check that the element (as taught above) is a single element comprising audio and photo data, because that step would be essential to any processing of the element.

Regarding dependent claim(s) 43, 52, OSTA teaches an attribute indicating a duration of displaying each of the photo data.

Regarding dependent claim(s) 46-47, 55, 56, OSTA teaches the metadata is a markup language, MPV (p.9, para. 2).

Regarding dependent claim(s) 48, 57, OSTA teaches the elements are defined by a schema (§2.2, para. 2)

Regarding dependent claim(s) 49, 58, OSTA teaches the element is name StillWithAudio, not AudioWithStill. It would have been obvious to one of ordinary skill in the art at the time of the invention to switch the order to "AudioWithStill", because it still describes the type of asset in question. Also, the difference in the descriptive material describing the element would not result in any patentable difference in how the steps are carried out. See *In re Gulack*, 703 F.2d 1381, 1385, 217 USPQ 401, 404 (Fed. Cir. 1983); *In re Lowry*, 32 F.3d 1579, 32 USPQ2d 1031 (Fed. Cir. 1994).

Regarding dependent claim(s) 50, 59, OSTA teaches information an on attribute of the asset (Recommended properties, p. 109).

7. **Claim 44 and 53 are rejected under 35 U.S.C. 103(a) as being unpatentable over OSTA as applied to claims 41 and 51 above, and further in view of Sheldon et al. (7,426,700 B2, 8/16/2008).**

Regarding dependent claim(s) 44, 53, OSTA is a specification, and discloses varies elements and attributes that intended to be used together to define an asset, but does not specifically disclose the generation of the code the asset. It would have been obvious to one of ordinary skill in the art at the time of the invention to have generate code containing these elements and attributes (which are for the asset type), so that they could be used for display. This would have been desired because the reference is specifically instructions for the creation of such code (for example, §3.1).

OSTA does not disclose obtaining an icon. Sheldon teaches obtaining a thumbnail rendition according to a type of asset (file type, col. 6, ll. 15-25). It would have been obvious to one of ordinary skill in the art at the time of the invention to combine Sheldon with OSTA as it would ensure the best possible view for the data (Sheldon, c5.56-58) and because thumbnail was a known predictable manner in which to display an asset.

8. Claims 45 and 54 are rejected under 35 U.S.C. 103(a) as being unpatentable over OSTA and Sheldon applied to claims 41 and 51 above, and further in view of "Synchronized Multimedia Integration Language (SMIL 2.0),W3C Recommendation 07 August 2001" by Jeff Ayars et al.

Regarding dependent claim(s) 45, 54, OSTA and Sheldon do not teach asset transitions. Ayars teaches a user ("author" sentence spanning p. 307-308) defining duration (dur attributes, ex. p. 308) and type (straight cut or left-to-right wipe, p. 308, 2nd full para.). It would have been obvious to one of ordinary skill in the art at the time of the invention to add this timing and transition model to the above combination to enable more presentation options and aesthetic effect (Ayars, spanning para. pp. 307-308), and because Ayers is specifically designed to be added on to other presentation languages (p. 169, para. 2), and because OSTA specifically recommends using use with SMIL for additional features (p. 9 para. 1).

Double Patenting

9. The nonstatutory double patenting rejection is based on a judicially created doctrine grounded in public policy (a policy reflected in the statute) so as to prevent the unjustified or improper timewise extension of the "right to exclude" granted by a patent and to prevent possible harassment by multiple assignees. A nonstatutory obviousness-type double patenting rejection is appropriate where the conflicting claims are not identical, but at least one examined application claim is not patentably distinct from the reference claim(s) because the examined application claim is either anticipated by, or would have been obvious over, the reference claim(s). See, e.g., *In re Berg*, 140 F.3d 1428, 46 USPQ2d 1226 (Fed. Cir. 1998); *In re*

Goodman, 11 F.3d 1046, 29 USPQ2d 2010 (Fed. Cir. 1993); *In re Longi*, 759 F.2d 887, 225 USPQ 645 (Fed. Cir. 1985); *In re Van Ornum*, 686 F.2d 937, 214 USPQ 761 (CCPA 1982); *In re Vogel*, 422 F.2d 438, 164 USPQ 619 (CCPA 1970); and *In re Thorington*, 418 F.2d 528, 163 USPQ 644 (CCPA 1969).

A timely filed terminal disclaimer in compliance with 37 CFR 1.321(c) or 1.321(d) may be used to overcome an actual or provisional rejection based on a nonstatutory double patenting ground provided the conflicting application or patent either is shown to be commonly owned with this application, or claims an invention made as a result of activities undertaken within the scope of a joint research agreement.

Effective January 1, 1994, a registered attorney or agent of record may sign a terminal disclaimer. A terminal disclaimer signed by the assignee must fully comply with 37 CFR 3.73(b).

10. **Claims 25-40 are provisionally rejected on the ground of nonstatutory obviousness-type double patenting as being unpatentable over claims 36-48 of copending Application No. 10/559,374. Although the conflicting claims are not identical, they are not patentably distinct from each other because:** The co-pending claim is the apparatus (not a method) that is enabled to carry out every step of the instant method. It would have been obvious to one of ordinary skill in the art at the time of the invention to execute the software, carrying out the method, as that was its intended use.

This is a provisional obviousness-type double patenting rejection because the conflicting claims have not in fact been patented.

11. Claims 41-43, 46-52, and 55-59 are provisionally rejected on the ground of nonstatutory obviousness-type double patenting as being unpatentable over claims 15-18, 20-25, 27-28, and 30-33 of copending Application No. 10/948,316. Although the conflicting claims are not identical, they are not patentably distinct from each other because:

Every element of the claims is anticipated by the copending claims, except the co-pending claims teach videos displayed in relation to audio, while the instant application teaches photos displayed in relation to audio. OSTA teaches that audio, video, photo and text were both

different subclasses of a type of multimedia, a simple media asset (p. 83). It would have been obvious to one of ordinary skill in the art at the time of the invention to display photos in relation to audio instead of video, as they were both a form of multimedia intended to be displayed in conjunction with other multimedia, and would have received the same benefit by displaying them according to a temporal relationship.

This is a provisional obviousness-type double patenting rejection because the conflicting claims have not in fact been patented.

12. Claims 41-43, 46-52, and 55-59 are provisionally rejected on the ground of nonstatutory obviousness-type double patenting as being unpatentable over claims 46-53, 55-63 and 56-68 of copending Application No. 10/949,474. Although the conflicting claims are not identical, they are not patentably distinct from each other because:

Every element of the claims is anticipated by the copending claims, except the co-pending claims teach text displayed in relation to any multimedia, while the instant application teaches photos displayed in relation to audio. OSTA teaches that audio, video, photo and text were both different subclasses of a type of multimedia, a simple media asset (p. 83). It would have been obvious to one of ordinary skill in the art at the time of the invention to display photos instead of text, in relation to audio instead of any multimedia, as they were all forms of multimedia intended to be displayed in conjunction with other multimedia, and would have received the same benefit by displaying them according to a temporal relationship.

This is a provisional obviousness-type double patenting rejection because the conflicting claims have not in fact been patented.

13. Claims 41-43, 46-52, and 55-59 are provisionally rejected on the ground of nonstatutory obviousness-type double patenting as being unpatentable over claims 17-35 of copending Application No. 10/949,253. Although the conflicting claims are not identical, they are not patentably distinct from each other because:

Every element of the claims is anticipated by the copending claims, except the co-pending claims teach photo displayed in relation to any video, while the instant application teaches photos displayed in relation to audio. OSTA teaches that audio, video, photo and text were both different subclasses of a type of multimedia, a simple media asset (p. 83). It would have been obvious to one of ordinary skill in the art at the time of the invention to display photos in relation to audio instead of any video, as they were all forms of multimedia intended to be displayed in conjunction with other multimedia, and would have received the same benefit by displaying them according to a temporal relationship.

This is a provisional obviousness-type double patenting rejection because the conflicting claims have not in fact been patented.

Response to Arguments

14. Applicant's arguments filed 9/24/2008 have been fully considered but they are not persuasive.

Applicant's arguments fail to comply with 37 CFR 1.111(b) because they amount to a general allegation that the claims define a patentable invention without specifically pointing out how the language of the claims patentably distinguishes them from the references.

Conclusion

Any inquiry concerning this communication or earlier communications from the examiner should be directed to ADAM M. QUELER whose telephone number is (571)272-4140. The examiner can normally be reached on Monday-Friday.

If attempts to reach the examiner by telephone are unsuccessful, the examiner's supervisor, Stephen Hong can be reached on (571) 272-4124. The fax phone number for the organization where this application or proceeding is assigned is 571-273-8300.

Information regarding the status of an application may be obtained from the Patent Application Information Retrieval (PAIR) system. Status information for published applications may be obtained from either Private PAIR or Public PAIR. Status information for unpublished applications is available through Private PAIR only. For more information about the PAIR system, see http://pair-direct.uspto.gov. Should you have questions on access to the Private PAIR system, contact the Electronic Business Center (EBC) at 866-217-9197 (toll-free). If you would like assistance from a USPTO Customer Service Representative or access to the automated information system, call 800-786-9199 (IN USA OR CANADA) or 571-272-1000.

/Adam M Queler/
Examiner, Art Unit 2178

UNITED STATES PATENT AND TRADEMARK OFFICE

COMMISSIONER FOR PATENTS
UNITED STATES PATENT AND TRADEMARK OFFICE
P.O. BOX 1450
ALEXANDRIA, VA 22313-1450
www.uspto.gov

11 APR 2007

SUGHRUE MION, PLLC
2100 PENNSYLVANIA AVENUE, N.W.
SUITE 800
WASHINGTON, DC 20037

In re Application of PORTNYKH et al :
U.S. Application No.: 11/415,098 :
Filing Date: May 2, 2006 : DECISION
Attorney Docket No.: Q94816 :

This is in response to applicant's "Petition Under 37 CFR § 1.47(a)" filed 22 November 2006 and "Supplemental Petition Under 37 CFR § 1.47(a)" filed 29 March 2007.

MPEP 602.05(a) states in relevant part,

> A continuation or divisional application of a prior application accorded status under 37 CFR 1.47 will be accorded status under 37 CFR 1.47 if a copy of the decision according 37 CFR 1.47 status in the prior application is filed in the continuation or divisional application, unless an oath or declaration signed by all of the inventors is included upon filing the continuation or divisional application. An oath or declaration in an application accorded status under 37 CFR 1.47 is generally not signed by all of the inventors. Accordingly, if a copy of an oath or declaration of a prior application is submitted in a continuation or divisional application filed under 37 CFR 1.53(b) and the copy of the oath or declaration omits the signature of one or more inventors, the Office of Initial Patent Examination (OIPE) should send a "Notice to File Missing Parts" requiring the signature of the nonsigning inventor, unless a copy of the decision according status under 37 CFR 1.47 is also included at the time of filing of the continuation or divisional application. If OIPE mails such a Notice, a copy of the decision according status under 37 CFR 1.47, together with a surcharge under 37 CFR 1.16(f) for its late filing, will be an acceptable reply to the Notice.

In the present case, applicant has supplied a copy of the declaration of the parent application and a copy of the decision according the parent application status under 37 CFR 1.47(a). Accordingly, the present application is granted status under 37 CFR 1.47(a).

For the reasons above, the petition under 37 CFR 1.47(a) is DISMISSED AS MOOT.

As set forth in 37 CFR 1.47(a), a notice of the filing of this application will be forwarded to the nonsigning inventor at the last known address of record and will be published in the *Official Gazette*.

This application is being referred to the Office of Initial Patent Examination for continued processing.

Bryan Lin

Bryan Lin
PCT Legal Examiner
PCT Legal Office

Telephone: 571-272-3303
Facsimile: 571-273-0459

UNITED STATES PATENT AND TRADEMARK OFFICE

Commissioner for Patents
United States Patent and Trademark Office
P.O. Box 1450
Alexandria, VA 22313-1450
www.uspto.gov

SUGHRUE MION, P.L.L.C.
2100 PENNSYLVANIA AVENUE, N.W.
SUITE 800
WASHINGTON, DC 20037

COPY MAILED

JAN 19 2007

OFFICE OF PETITIONS

In re Application of :
Vladimir Portnykh et al. :
Application No. 11/415,104 : DECISION ACCORDING STATUS
Filed: May 2, 2006 : UNDER 37 CFR 1.47(a)
Attorney Docket No. Q94815 :

This is in response to the petition filed November 22, 2006 under 37 CFR 1.47(a).

The petition is **GRANTED**.

The above-identified application was filed on May 2, 2006 however, on May 24, 2006, a "Notice To File Missing Parts of Application" was mailed, requiring *inter alia* a properly executed oath or declaration signed by joint inventor Vladimir Portnykh.

In response, the instant petition under 37 CFR 1.47(a) and a four month extension of time was filed. The petition argues that joint inventor Portnykh refuses to sign the oath or declaration and thus by his actions, to cooperate with the filing of the instant application.

A grantable petition under 37 CFR 1.47(a) requires: (1) proof that the non-signing inventor cannot be reached or refuses to sign the oath or declaration after having been presented with the application papers (specification, claims and drawings); (2) an acceptable oath or declaration in compliance with 35 U.S.C. §§ 115 and 116; (3) the petition fee; and (4) a statement of the last known address of the non-signing inventor.

The petition bears proof that the application papers were presented to Mr. Portnykh and that he has expressly refused to execute the oath or declaration.

The above-identified application and papers have been reviewed and found in compliance with 37 CFR 1.47(a). In view thereof, this application is hereby accorded Rule 1.47(a) status.

Petitioner's deposit account no. 19-4880 has been charged in the amount of $200 for the petition fee and not $130 as indicated on the fee transmittal as effective December 8, 2004 the fee for a petition under 37 CFR 1.47(a) has been set at $200.00.

Thus, as provided in Rule 1.47c, this Office will forward notice of this application's filing to the non-signing inventor at the address given in the petition. Notice of the filing of this application will also be published in the Official Gazette.

This matter will be referred to the Office of Initial Patent Examination for further pre-examination processing.

Telephone inquiries concerning this matter may be directed to the undersigned Petitions Attorney at (571) 272-3212.

Patricia Faison-Ball

Patricia Faison-Ball
Senior Petitions Attorney
Office of Petitions

UNITED STATES PATENT AND TRADEMARK OFFICE

COMMISSIONER FOR PATENTS
UNITED STATES PATENT AND TRADEMARK OFFICE
P.O. BOX 1450
ALEXANDRIA, VA 22313-1450
www.uspto.gov

11 APR 2007

SUGHRUE MION, PLLC
2100 PENNSYLVANIA AVENUE, N.W.
SUITE 800
WASHINGTON, DC 20037

In re Application of PORTNYKH et al :
U.S. Application No.: 11/415,104 :
Filing Date: May 2, 2006 : DECISION
Attorney Docket No.: Q94815 :

This is in response to applicant's "Supplemental Petition Under 37 CFR § 1.47(a)" filed 29 March 2007.

MPEP 602.05(a) states in relevant part,

> A continuation or divisional application of a prior application accorded status under 37 CFR 1.47 will be accorded status under 37 CFR 1.47 if a copy of the decision according 37 CFR 1.47 status in the prior application is filed in the continuation or divisional application, unless an oath or declaration signed by all of the inventors is included upon filing the continuation or divisional application. An oath or declaration in an application accorded status under 37 CFR 1.47 is generally not signed by all of the inventors. Accordingly, if a copy of an oath or declaration of a prior application is submitted in a continuation or divisional application filed under 37 CFR 1.53(b) and the copy of the oath or declaration omits the signature of one or more inventors, the Office of Initial Patent Examination (OIPE) should send a "Notice to File Missing Parts" requiring the signature of the nonsigning inventor, unless a copy of the decision according status under 37 CFR 1.47 is also included at the time of filing of the continuation or divisional application. If OIPE mails such a Notice, a copy of the decision according status under 37 CFR 1.47, together with a surcharge under 37 CFR 1.16(f) for its late filing, will be an acceptable reply to the Notice.

In the present case, applicant has supplied a copy of the declaration of the parent application and a copy of the decision according the parent application status under 37 CFR 1.47(a). Accordingly, the present application is granted status under 37 CFR 1.47(a).

For the reasons above, the petition under 37 CFR 1.47(a) is DISMISSED AS MOOT.

Pursuant to 37 CFR 1.47(a), a notice of the filing of this application has been forwarded to the nonsigning inventor at the last known address of record and will be published in the *Official Gazette*.

This application is being referred to the Office of Initial Patent Examination for continued processing.

Bryan Lin

Bryan Lin
PCT Legal Examiner
PCT Legal Office

Telephone: 571-272-3303
Facsimile: 571-273-0459

UNITED STATES PATENT AND TRADEMARK OFFICE

UNITED STATES DEPARTMENT OF COMMERCE
United States Patent and Trademark Office
Address: COMMISSIONER FOR PATENTS
P.O. Box 1450
Alexandria, Virginia 22313-1450
www.uspto.gov

QISDA CORPORATION
157 SHAN-YING ROAD, GUEISHAN
TAOYUAN, 333
TAIWAN

Mail Date: 04/21/2010

Applicant	: Lung-Ta Lin	: DECISION ON REQUEST FOR
Patent Number	: 7585079	: RECALCULATION of PATENT
Issue Date	: 09/08/2009	: TERM ADJUSTMENT IN VIEW
Appliction No	: 11/415,122	: OF WYETH AND NOTICE OF INTENT TO
Filed	: 05/02/2006	: ISSUE CERTIFICATE OF CORRECTION
		:

The Request for Recalculation is **GRANTED** to the extent indicated.

The patent term adjustment has been determined to be **799** days. The USPTO will *sua sponte* issue a certificate of correction reflecting the amount of PTA days determined by the recalculation.

Prior to the issuance of the certificate of correction, the USPTO will afford patentee an opportunity to be heard and request reconsideration. Accordingly, patentee has **one month or thirty (30) days**, whichever is longer, to file a request for reconsideration of this patent term adjustment calculation. See 35 U.S.C. 154(b)(3)(B)(ii) and 37 CFR 1.322(a)(4). No extensions of time will be granted under 37 CFR 1.136.

Patentee should use document code PET.OP if electronically filing a request for reconsideration of this patent term adjustment calculation. The patentee must also include the information required by 37 CFR 1.705(b)(2) and the fee required by 37 CFR 1.18(e). If patentee does not file a timely request for reconsideration of this patent term adjustment calculation including the information required by 37 CFR 1.705(b)(2) and the fee required by 37 CFR 1.18(e), the USPTO will issue a certificate of correction reflecting the PTA determination noted above.

Patentee should be aware that in order to preserve the right to review in the United States District Court for the District of Columbia of the USPTO patent term adjustment determination, patentee must ensure that he or she also take the steps required under 35 U.S.C. 154(b)(4)(A) in a timely manner. Nothing in the request for recalculation should be construed as providing an alternative time frame for commencing a civil action under 35 U.S.C. 154(b)(4)(A).

Any questions concerning this decision should be directed to the Office of Patent Legal Administration at 571-272-7702.

UNITED STATES PATENT AND TRADEMARK OFFICE

Commissioner for Patents
United States Patent and Trademark Office
P.O. Box 1450
Alexandria, VA 22313-1450
www.uspto.gov

PHILIP S. JOHNSON
JOHNSON & JOHNSON
ONE JOHNSON & JOHNSON PLAZA
NEW BRUNSWICK NJ 08933-7003

COPY MAILED
MAR 02 2010

In re Application of :
Zeling Cai et al. :
Application No. 11/415,135 : DECISION ON PETITION
Filed: May 1, 2006 :
Attorney Docket No. ORT-0989USCNT1 :

This is a decision on the petition under the unintentional provisions of 37 CFR 1.137(b), filed December 3, 2009, to revive the above-identified application.

The petition is **GRANTED**.

The application became abandoned for failure to reply in a timely manner to the non-final Office action mailed October 20, 2008, which set a shortened statutory period for reply of three (3) months. No extensions of time under the provisions of 37 CFR 1.136(a) were obtained. Accordingly, the application became abandoned on January 21, 2009. A Notice of Abandonment was mailed on July 24, 2009.

The petition satisfies the requirements of 37 CFR 1.137(b) in that petitioner has supplied (1) the reply in the form of an amendment, (2) the petition fee of $1,620 and (3) a proper statement of unintentional delay. Accordingly, the amendment is accepted as being unintentionally delayed.

Telephone inquiries concerning this decision should be directed to Kimberly Inabinet at (571) 272-4618.

This application is being referred to Technology Center AU 1644 for appropriate action by the Examiner in the normal course of business on the reply received December 3, 2009.

/Kimberly Inabinet/

Kimberly Inabinet
Petitions Examiner
Office of Petitions

UNITED STATES PATENT AND TRADEMARK OFFICE

Commissioner for Patents
United States Patent and Trademark Office
P.O. Box 1450
Alexandria, VA 22313-1450
www.uspto.gov

SUGHRUE-265550
2100 PENNSYLVANIA AVE. NW
WASHINGTON, DC 20037-3213

COPY MAILED

OCT 2 4 2008

OFFICE OF PETITIONS

In re Application of :
EGAWA, et al. :
Application No. 11/415,141 : DECISION GRANTING PETITION
Filed: May 2, 2006 : UNDER 37 CFR 1.313(c)(2)
Attorney Docket No. **Q94497** :

This is a decision on the petition under 37 CFR 1.313(c)(2), filed October 23, 2008, to withdraw the above-identified application from issue after payment of the issue fee.

The petition is **GRANTED**.

The above-identified application is withdrawn from issue for consideration of a submission under 37 CFR 1.114 (request for continued examination). *See* 37 CFR 1.313(c)(2).

Petitioner is advised that the issue fee paid on October 1, 2008 cannot be refunded. If, however, this application is again allowed, petitioner may request that it be applied towards the issue fee required by the new Notice of Allowance.[1]

Telephone inquiries should be directed to the undersigned at (571) 272-7253.

This application is being referred to Technology Center AU 2833 for processing of the request for continued examination under 37 CFR 1.114 and for consideration of the concurrently filed information disclosure statement.

Monica A. Graves
Petitions Examiner
Office of Petitions

[1] *The request to apply the issue fee to the new Notice may be satisfied by completing and returning the new Part B – Fee(s) Transmittal Form (along with any balance due at the time of submission). Petitioner is advised that the Issue Fee Transmittal Form must be completed and timely submitted to avoid abandonment of the application.*

UNITED STATES PATENT AND TRADEMARK OFFICE

UNITED STATES DEPARTMENT OF COMMERCE
United States Patent and Trademark Office
Address: COMMISSIONER FOR PATENTS
P.O. Box 1450
Alexandria, Virginia 22313-1450
www.uspto.gov

MOFFAT-RIM
427 Laurier Avenue W.
Suite 1200
Ottawa, ON K1R 7Y2
CANADA

Mail Date: 04/21/2010

Applicant	: Michael Shenfield	: DECISION ON REQUEST FOR
Patent Number	: 7644139	: RECALCULATION of PATENT
Issue Date	: 01/05/2010	: TERM ADJUSTMENT IN VIEW
Appliction No	: 11/415,142	: OF WYETH AND NOTICE OF INTENT TO
Filed	: 05/02/2006	: ISSUE CERTIFICATE OF CORRECTION
		:

The Request for Recalculation is **GRANTED** to the extent indicated.

The patent term adjustment has been determined to be **769** days. The USPTO will *sua sponte* issue a certificate of correction reflecting the amount of PTA days determined by the recalculation.

Prior to the issuance of the certificate of correction, the USPTO will afford patentee an opportunity to be heard and request reconsideration. Accordingly, patentee has **one month or thirty (30) days**, whichever is longer, to file a request for reconsideration of this patent term adjustment calculation. See 35 U.S.C. 154(b)(3)(B)(ii) and 37 CFR 1.322(a)(4). No extensions of time will be granted under 37 CFR 1.136.

Patentee should use document code PET.OP if electronically filing a request for reconsideration of this patent term adjustment calculation. The patentee must also include the information required by 37 CFR 1.705(b)(2) and the fee required by 37 CFR 1.18(e). If patentee does not file a timely request for reconsideration of this patent term adjustment calculation including the information required by 37 CFR 1.705(b)(2) and the fee required by 37 CFR 1.18(e), the USPTO will issue a certificate of correction reflecting the PTA determination noted above.

Patentee should be aware that in order to preserve the right to review in the United States District Court for the District of Columbia of the USPTO patent term adjustment determination, patentee must ensure that he or she also take the steps required under 35 U.S.C. 154(b)(4)(A) in a timely manner. Nothing in the request for recalculation should be construed as providing an alternative time frame for commencing a civil action under 35 U.S.C. 154(b)(4)(A).

Any questions concerning this decision should be directed to the Office of Patent Legal Administration at 571-272-7702.

UNITED STATES PATENT AND TRADEMARK OFFICE

UNITED STATES DEPARTMENT OF COMMERCE
United States Patent and Trademark Office
Address: COMMISSIONER FOR PATENTS
P.O. Box 1450
Alexandria, Virginia 22313-1450
www.uspto.gov

MOFFAT-RIM
427 Laurier Avenue W.
Suite 1200
Ottawa, ON K1R 7Y2
CANADA

Mail Date: 05/17/2010

Applicant : Michael Shenfield
Patent Number : 7644139
Issue Date : 01/05/2010
Application No: 11/415,142
Filed : 05/02/2006

: NOTICE CONCERNING IMPROPER
: CALCULATION OF PATENT TERM
: ADJUSTMENT BASED UPON USPTO
: IMPROPERLY MEASURING REDUCTION
: PERIOD UNDER 37 CFR 1.704(c)(10).

The United States Patent and Trademark Office (USPTO) discovered that in processing the recent recalculation decisions mailed in response to patentee's filed Request for Recalculation of Patent Term Adjustment in view of Wyeth, the USPTO improperly measured the reduction period for reductions under 37 CFR 1.704(c)(10). Pursuant to 37 CFR 1.704(c)(10), patentee's reduction begins on the date of filing the amendment under 37 CFR 1.312 ("1.312 amendment") or other related paper and ends on the date that the Office mails a response to the filing of the 1.312 amendment or other paper. It has been discovered that during the recalculation, the calculation failed to the limit the reduction to the mail date of the response to the 1.312 amendment or other paper. Accordingly, patentee's reductions were greater than warranted.

This notice **VACATES** the previous GRANTED request for recalculation and provides patentee with a revised GRANTED recalculation.

The patent term adjustment has been determined to be **841** days. The USPTO will *sua sponte* issue a certificate of correction reflecting the amount of patent term adjustment (PTA) days determined by the recalculation.

Prior to the issuance of the certificate of correction, the USPTO will afford patentee an opportunity to be heard and request reconsideration. Accordingly, patentee has **one month or thirty (30) days** from the mail date of this notice, whichever is longer, to file a request for reconsideration of this PTA calculation. See 35 U.S.C. § 154(b)(3)(B)(ii) and 37 CFR 1.322(a)(4).

Patentee should use document code PET.OP if electronically filing a request for reconsideration of this PTA calculation. The patentee must also include the information required by 37 CFR 1.705(b)(2), and the fee required by 37 CFR 1.18(e). If patentee does not file a timely request for reconsideration of this PTA calculation, including the information required by 37 CFR 1.705(b)(2) and the fee required by 37 CFR 1.18(e), the USPTO will issue a certificate of correction reflecting the PTA determination noted above.

Patentee should be aware that in order to preserve the right of review of the USPTO's PTA determination in the United States District Court for the District of Columbia, patentee must ensure that the steps required under 35 U.S.C. § 154 (b)(4) are taken in a timely manner. Nothing in the request for recalculation should be construed as providing an alternative time frame for commencing a civil action under 35 U.S.C. § 154(b)(4).

UNITED STATES PATENT AND TRADEMARK OFFICE

UNITED STATES DEPARTMENT OF COMMERCE
United States Patent and Trademark Office
Address: COMMISSIONER FOR PATENTS
P.O. Box 1450
Alexandria, Virginia 22313-1450
www.uspto.gov

RABIN & Berdo, PC
1101 14TH STREET, NW
SUITE 500
WASHINGTON, DC 20005

Mail Date: 04/21/2010

Applicant	: Chun Chieh Yang	: DECISION ON REQUEST FOR
Patent Number	: 7598533	: RECALCULATION of PATENT
Issue Date	: 10/06/2009	: TERM ADJUSTMENT IN VIEW
Appliction No	: 11/415,150	: OF WYETH AND NOTICE OF INTENT TO
Filed	: 05/02/2006	: ISSUE CERTIFICATE OF CORRECTION
		:

The Request for Recalculation is **GRANTED** to the extent indicated.

The patent term adjustment has been determined to be **0** days. The USPTO will *sua sponte* issue a certificate of correction reflecting the amount of PTA days determined by the recalculation.

Prior to the issuance of the certificate of correction, the USPTO will afford patentee an opportunity to be heard and request reconsideration. Accordingly, patentee has **one month or thirty (30) days**, whichever is longer, to file a request for reconsideration of this patent term adjustment calculation. See 35 U.S.C. 154(b)(3)(B)(ii) and 37 CFR 1.322(a)(4). No extensions of time will be granted under 37 CFR 1.136.

Patentee should use document code PET.OP if electronically filing a request for reconsideration of this patent term adjustment calculation. The patentee must also include the information required by 37 CFR 1.705(b)(2) and the fee required by 37 CFR 1.18(e). If patentee does not file a timely request for reconsideration of this patent term adjustment calculation including the information required by 37 CFR 1.705(b)(2) and the fee required by 37 CFR 1.18(e), the USPTO will issue a certificate of correction reflecting the PTA determination noted above.

Patentee should be aware that in order to preserve the right to review in the United States District Court for the District of Columbia of the USPTO patent term adjustment determination, patentee must ensure that he or she also take the steps required under 35 U.S.C. 154(b)(4)(A) in a timely manner. Nothing in the request for recalculation should be construed as providing an alternative time frame for commencing a civil action under 35 U.S.C. 154(b)(4)(A).

Any questions concerning this decision should be directed to the Office of Patent Legal Administration at 571-272-7702.

UNITED STATES PATENT AND TRADEMARK OFFICE

Commissioner for Patents
United States Patent and Trademark Office
P.O. Box 1450
Alexandria, VA 22313-1450
www.uspto.gov

FOLEY AND LARDNER LLP
SUITE 500
3000 K STREET NW
WASHINGTON, DC 20007

COPY MAILED

JUN 19 2008

OFFICE OF PETITIONS

In re Application of :
Gary Allan Kemp, II :
Application No. 11/415,161 : DECISION ON PETITION
Filed: May 2, 2006 : TO WITHDRAW
Attorney Docket No. 024051-0226 : FROM RECORD

This is a decision on the Request to Withdraw as attorney or agent of record under 37 C.F.R. § 1.36(b), filed November 28, 2007.

The request is **DISMISSED** as moot.

A review of the file record indicates that the power of attorney to Foley & Lardner, LLP has been revoked by the assignee of the patent application on November 6, 2007. Accordingly, the request to withdraw under 37 C.F.R. § 1.36(b) is moot.

All future communications from the Office will continue to be directed to the below-listed address until otherwise notified by applicant.

Telephone inquires concerning this decision should be directed to undersigned at 571-272- 1642.

April M. Wise
Petitions Examiner
Office of Petitions

cc: JOE HERNDON
MCDONNELL, BOEHNEN, HULBERT & BERGHOFF, LLP
300 SOUTH WACKER DRIVE
CHICAGO, IL 60606-6709

UNITED STATES PATENT AND TRADEMARK OFFICE

Commissioner for Patents
United States Patent and Trademark Office
P.O. Box 1450
Alexandria, VA 22313-1450
www.uspto.gov

MAILED

APR 2 3 2010

OFFICE OF PETITIONS

MBHB/TRADING TECHNOLOGIES
300 SOUTH WACKER DRIVE
SUITE 3200
CHICAGO IL 60606

In re Patent of Kemp et al.	: DECISION ON REQUEST
Patent No. 7,567,929	: FOR
Issue Date: July 28, 2009	: RECONSIDERATION OF
Application No. 11/415,161	: PATENT TERM ADJUSTMENT
Filed: May 2, 2006	: and
Atty Docket No. 07-1022-US-CON	: NOTICE OF INTENT TO ISSUE
	: CERTIFICATE OF CORRECTION

This is a decision on the petition filed on September 25, 2009, which is being treated as a petition under 37 CFR 1.705(d) requesting that the patent term adjustment indicated on the above-identified patent be corrected to indicate that the term of the above-identified patent is extended or adjusted by one hundred forty-two (142) days.

The petition to correct the patent term adjustment indicated on the above-identified patent to indicate that the term of the above-identified patent is extended or adjusted by one hundred forty-two (142) days is **GRANTED**.

The Office acknowledges submission of the $200.00 fee set forth in 37 CFR 1.18(e). No additional fees are required.

The application is being forwarded to the Certificates of Correction Branch for issuance of a certificate of correction. The Office will issue a certificate of correction indicating that the term of the above-identified patent is extended or adjusted by **one hundred forty-two (142)** days.

Telephone inquiries specific to this matter should be directed to the undersigned at (571) 272-3230

Shirene Willis Brantley
Senior Petitions Attorney
Office of Petitions

Enclosure: Copy of DRAFT Certificate of Correction

UNITED STATES PATENT AND TRADEMARK OFFICE

CERTIFICATE OF CORRECTION

PATENT : 7,567,929 B2

DATED : **July 28, 2009** **DRAFT**

INVENTOR(S) : Kemp et al.

It is certified that error appears in the above-identified patent and that said Letters Patent is hereby corrected as shown below:

On the cover page,

[*] Notice: Subject to any disclaimer, the term of this patent is extended or adjusted under 35 U.S.C. 154(b) by 55 days

Delete the phrase "by 55 days" and insert – by 142 days--

UNITED STATES PATENT AND TRADEMARK OFFICE

Commissioner for Patents
United States Patent and Trademark Office
P.O. Box 1450
Alexandria, VA 22313-1450
www.uspto.gov

Foley and Lardner LLP
Suite 500
3000 K Street NW
Washington DC 20007

COPY MAILED

MAR 17 2008

OFFICE OF PETITIONS

In re Application of	:	
Gary Allan Kemp II et al.	:	
Application No. 11/415,163	:	DECISION ON PETITION
Filed: May 2, 2006	:	TO WITHDRAW
Attorney Docket No. 024051-0223	:	FROM RECORD
	:	

This is a decision on the Request to Withdraw as attorney or agent of record under 37 C.F.R. § 1.36(b), filed November 28, 2007.

The request is **NOT APPROVED** because it is moot.

A review of the file record indicates that the power of attorney to Foley and Lardner LLP has been revoked by the assignee of the patent application on November 1, 2007. Accordingly, the request to withdraw under 37 C.F.R. § 1.36(b) is moot.

All future communications from the Office will continue to be directed to the below-listed address until otherwise notified by applicant.

Telephone inquires concerning this decision should be directed to Terri Williams at 571-272-2991.

T. Williams

Terri Williams
Petitions Examiner
Office of Petitions

cc: **MBHB/Trading Technologies**
300 South Wacker Drive
Suite 3200
Chicago, IL 60606

UNITED STATES PATENT AND TRADEMARK OFFICE

Commissioner for Patents
United States Patent and Trademark Office
P.O. Box 1450
Alexandria, VA 22313-1450
www.uspto.gov

FOLEY AND LARDNER LLP
SUITE 500
3000 K STREET NW
WASHINGTON, DC 20007

COPY MAILED

JAN 2 2 2008

OFFICE OF PETITIONS

In re Application of
Mike BURNS II, et al
Application No. 11/415,177
Filed: May 2, 2006
Attorney Docket No. 024051-0224

DECISION ON PETITION
TO WITHDRAW
FROM RECORD

This is a decision on the Request to Withdraw as attorney or agent of record under 37 C.F.R. § 1.36(b), filed November 28, 2007.

The request is **DISMISSED** as moot.

A review of the file record indicates that the power of attorney to Foley and Lardner, LLP, has been revoked by the assignee of the patent application on November 6, 2007. Accordingly, the request to withdraw under 37 C.F.R. § 1.36(b) is moot.

The correspondence address of record has been changed and the new correspondence address is the address indicated below.

Telephone inquires concerning this decision should be directed to undersigned at 571-272- 6735.

Diane Goodwyn
Petitions Examiner
Office of Petitions

cc: JOE HERNDON
MCDONNELL, BOEHNEN,
HULBERT & BERGHOFF LLP
300 SOUTH WACKER DRIVE
CHICAGO, IL 60606-6709

UNITED STATES PATENT AND TRADEMARK OFFICE

UNITED STATES DEPARTMENT OF COMMERCE
United States Patent and Trademark Office
Address: COMMISSIONER FOR PATENTS
P.O. Box 1450
Alexandria, Virginia 22313-1450
www.uspto.gov

VENABLE LLP
P.O. BOX 34385
WASHINGTON, DC 20043-9998

Mail Date: 04/21/2010

Applicant	: Gerd Pferdmenges	: DECISION ON REQUEST FOR
Patent Number	: 7614122	: RECALCULATION of PATENT
Issue Date	: 11/10/2009	: TERM ADJUSTMENT IN VIEW
Appliction No	: 11/415,187	: OF WYETH AND NOTICE OF INTENT TO
Filed	: 05/02/2006	: ISSUE CERTIFICATE OF CORRECTION
		:

The Request for Recalculation is **GRANTED** to the extent indicated.

The patent term adjustment has been determined to be **774** days. The USPTO will *sua sponte* issue a certificate of correction reflecting the amount of PTA days determined by the recalculation.

Prior to the issuance of the certificate of correction, the USPTO will afford patentee an opportunity to be heard and request reconsideration. Accordingly, patentee has **one month or thirty (30) days**, whichever is longer, to file a request for reconsideration of this patent term adjustment calculation. See 35 U.S.C. 154(b)(3)(B)(ii) and 37 CFR 1.322(a)(4). No extensions of time will be granted under 37 CFR 1.136.

Patentee should use document code PET.OP if electronically filing a request for reconsideration of this patent term adjustment calculation. The patentee must also include the information required by 37 CFR 1.705(b)(2) and the fee required by 37 CFR 1.18(e). If patentee does not file a timely request for reconsideration of this patent term adjustment calculation including the information required by 37 CFR 1.705(b)(2) and the fee required by 37 CFR 1.18(e), the USPTO will issue a certificate of correction reflecting the PTA determination noted above.

Patentee should be aware that in order to preserve the right to review in the United States District Court for the District of Columbia of the USPTO patent term adjustment determination, patentee must ensure that he or she also take the steps required under 35 U.S.C. 154(b)(4)(A) in a timely manner. Nothing in the request for recalculation should be construed as providing an alternative time frame for commencing a civil action under 35 U.S.C. 154(b)(4)(A).

Any questions concerning this decision should be directed to the Office of Patent Legal Administration at 571-272-7702.

UNITED STATES PATENT AND TRADEMARK OFFICE

UNITED STATES DEPARTMENT OF COMMERCE
United States Patent and Trademark Office
Address: COMMISSIONER FOR PATENTS
P.O. Box 1450
Alexandria, Virginia 22313-1450
www.uspto.gov

BLANK ROME LLP
WATERGATE
600 NEW HAMPSHIRE AVENUE, N.W.
WASHINGTON, DC 20037

Mail Date: 04/21/2010

Applicant	: Michel J. Berg	: DECISION ON REQUEST FOR
Patent Number	: 7587259	: RECALCULATION of PATENT
Issue Date	: 09/08/2009	: TERM ADJUSTMENT IN VIEW
Appliction No	: 11/415,192	: OF WYETH AND NOTICE OF INTENT TO
Filed	: 05/02/2006	: ISSUE CERTIFICATE OF CORRECTION
		:

The Request for Recalculation is **GRANTED** to the extent indicated.

The patent term adjustment has been determined to be **527** days. The USPTO will *sua sponte* issue a certificate of correction reflecting the amount of PTA days determined by the recalculation.

Prior to the issuance of the certificate of correction, the USPTO will afford patentee an opportunity to be heard and request reconsideration. Accordingly, patentee has **one month or thirty (30) days**, whichever is longer, to file a request for reconsideration of this patent term adjustment calculation. See 35 U.S.C. 154(b)(3)(B)(ii) and 37 CFR 1.322(a)(4). No extensions of time will be granted under 37 CFR 1.136.

Patentee should use document code PET.OP if electronically filing a request for reconsideration of this patent term adjustment calculation. The patentee must also include the information required by 37 CFR 1.705(b)(2) and the fee required by 37 CFR 1.18(e). If patentee does not file a timely request for reconsideration of this patent term adjustment calculation including the information required by 37 CFR 1.705(b)(2) and the fee required by 37 CFR 1.18(e), the USPTO will issue a certificate of correction reflecting the PTA determination noted above.

Patentee should be aware that in order to preserve the right to review in the United States District Court for the District of Columbia of the USPTO patent term adjustment determination, patentee must ensure that he or she also take the steps required under 35 U.S.C. 154(b)(4)(A) in a timely manner. Nothing in the request for recalculation should be construed as providing an alternative time frame for commencing a civil action under 35 U.S.C. 154(b)(4)(A).

Any questions concerning this decision should be directed to the Office of Patent Legal Administration at 571-272-7702.

UNITED STATES PATENT AND TRADEMARK OFFICE

Commissioner for Patents
United States Patent and Trademark Office
P.O. Box 1450
Alexandria, VA 22313-1450
www.uspto.gov

APPLICATION NUMBER	FILING/RECEIPT DATE	FIRST NAMED APPLICANT	ATTORNEY DOCKET NUMBER
11/415,221	05/02/2006	Young-jin Park	102-1265

STANZIONE & KIM, LLP
919 18TH STREET, N.W.
SUITE 440
WASHINGTON DC 20006

DATE MAILED: May 10, 2007

DECISION GRANTING PETITION UNDER 37 CFR 1.138(d)
The declaration of express abandonment is recognized

This is in response to the petition under 37 CFR 1.138(d) filed April 17, 2007, requesting for a refund of any previously paid search fee and excess claims fee in the above-identified application.

The petition is granted.

The express abandonment is recognized. Any previously paid search fee and excess claims fee are hereby refunded.

Any inquiries concerning this decision should be directed to the Pre-Grant Publication Division at (703) 605-4283.

Barbara J. Debnam
Pre-Grant Publication Division

UNITED STATES PATENT AND TRADEMARK OFFICE

Commissioner for Patents
United States Patent and Trademark Office
P.O. Box 1450
Alexandria, VA 22313-1450
www.uspto.gov

SMART & BIGGAR
1000 DE LA GAUCHETIERE ST. W., SUITE 3300
MONTREAL QC H3B 4W5 CA CANADA

MAILED

JUL 20 2009

OFFICE OF PETITIONS

In re Application of :

Guy DUFOUR :
Application No. 11/415,232 : DECISION ON PETITION TO
Filed: May 2, 2006 : WITHDRAW FROM RECORD
Attorney Docket No. **89020-5** :

This is a decision on the Request to Withdraw as attorney or agent of record under 37 C.F.R. § 1.36(b), filed May 6, 2009.

The request is **APPROVED**.

A grantable request to withdraw as attorney/agent of record must be signed by every attorney/agent seeking to withdraw or contain a clear indication that one attorney is signing on behalf of another/others.

The request was signed by Bridgide Matter on behalf of all attorneys of record. All attorneys/agents associated have been withdrawn. Applicant is reminded that there is no attorney of record at this time.

The request to change the correspondence of record is not acceptable as the requested correspondence address is not that of: (1) the first named signing inventor; or (2) an intervening assignee of the entire interest under 37 C.F.R 3.71. All future communications from the Office will be directed to the assignee of the entire interest at the first copied address below until otherwise properly notified by the applicant.

There is an outstanding Office action mailed June 22, 2009 that requires a reply from the applicant.

Telephone inquiries concerning this decision should be directed to the undersigned at 571-272-7253.

/Monica A. Graves/
Petitions Examiner, Office of Petitions

cc: **LABCAL TECHNOLOGIES, INC.**
400 BOUL, JEAN-LESAGE, HALL QUEST, SUITE 30
QUEBEC, CANADA G1K 8W1

cc: **KATHRYN HUTTON**
CROSS MATCH TECHNOLOGIES, INC.
3950 RCA BLVD, SUITE 5001
PALM BEACH GARDENS, FL 33410

UNITED STATES PATENT AND TRADEMARK OFFICE

UNITED STATES DEPARTMENT OF COMMERCE
United States Patent and Trademark Office
Address: COMMISSIONER FOR PATENTS
P.O. Box 1450
Alexandria, Virginia 22313-1450
www.uspto.gov

PROSKAUER ROSE LLP
ONE INTERNATIONAL PLACE
BOSTON, MA 02110

Mail Date: 04/21/2010

Applicant	: Zheng Duan	: DECISION ON REQUEST FOR
Patent Number	: 7605340	: RECALCULATION of PATENT
Issue Date	: 10/20/2009	: TERM ADJUSTMENT IN VIEW
Appliction No	: 11/415,234	: OF WYETH AND NOTICE OF INTENT TO
Filed	: 05/01/2006	: ISSUE CERTIFICATE OF CORRECTION
		:

The Request for Recalculation is **GRANTED** to the extent indicated.

The patent term adjustment has been determined to be **484** days. The USPTO will *sua sponte* issue a certificate of correction reflecting the amount of PTA days determined by the recalculation.

Prior to the issuance of the certificate of correction, the USPTO will afford patentee an opportunity to be heard and request reconsideration. Accordingly, patentee has **one month or thirty (30) days**, whichever is longer, to file a request for reconsideration of this patent term adjustment calculation. See 35 U.S.C. 154(b)(3)(B)(ii) and 37 CFR 1.322(a)(4). No extensions of time will be granted under 37 CFR 1.136.

Patentee should use document code PET.OP if electronically filing a request for reconsideration of this patent term adjustment calculation. The patentee must also include the information required by 37 CFR 1.705(b)(2) and the fee required by 37 CFR 1.18(e). If patentee does not file a timely request for reconsideration of this patent term adjustment calculation including the information required by 37 CFR 1.705(b)(2) and the fee required by 37 CFR 1.18(e), the USPTO will issue a certificate of correction reflecting the PTA determination noted above.

Patentee should be aware that in order to preserve the right to review in the United States District Court for the District of Columbia of the USPTO patent term adjustment determination, patentee must ensure that he or she also take the steps required under 35 U.S.C. 154(b)(4)(A) in a timely manner. Nothing in the request for recalculation should be construed as providing an alternative time frame for commencing a civil action under 35 U.S.C. 154(b)(4)(A).

Any questions concerning this decision should be directed to the Office of Patent Legal Administration at 571-272-7702.

UNITED STATES PATENT AND TRADEMARK OFFICE

Commissioner for Patents
United States Patent and Trademark Office
P.O. Box 1450
Alexandria, VA 22313-1450
www.uspto.gov

FASKEN MARTINEAU DUMOULIN LLP
2100-1075 WEST GEORGIA STREET
VANCOUVER BC V6E 3G2 CA CANADA

COPY MAILED

SEP 20 2007

OFFICE OF PETITIONS

In re Application of	:	
Zahedi	:	
Application No. 11/415,242	:	DECISION GRANTING PETITION
Filed: May 2, 2006	:	UNDER 37 CFR 1.137(b)
Attorney Docket No. 261048.00006	:	

This is a decision on the petition under 37 CFR 1.137(b), filed April 24, 2007, to revive the above-identified application.

The petition is **GRANTED**.

The petition satisfies the conditions for revival pursuant to the provisions of 37 CFR 1.137(b) in that (1) the reply in the form of an abstract and required fee; (2) the petition fee; and (3) the required statement of unintentional delay have been received. Accordingly, the reply to the Notice To File Missing Parts Of Nonprovisional Application of May 30, 2006, is accepted as having been unintentionally delayed.

Telephone inquiries concerning this decision should be directed to the undersigned at (571) 272-3208.

This matter is being referred to the Office of Initial Patent Examination.

Karen Creasy

Karen Creasy
Petitions Examiner
Office of Petitions

18 SEP 2006

UNITED STATES PATENT AND TRADEMARK OFFICE

Commissioner for Patents
United States Patent and Trademark Office
P.O. Box 1450
Alexandria, VA 22313-1450
www.uspto.gov

Maria M. Eliseeva
HOUSTON ELISEEVA LLP
4 Militia Drive, Ste. 4
Lexington, MA 02421

In re Application of :
ULRICH *et al* :
U.S. Application No.: 11/415,254 :
Filing Date: May 1, 2006 :
Attorney Docket No.: 21295.0130US : **DECISION**
For: MICROSCOPE WITH EVANESCENT :
WAVE ILLUMINATION :

This decision is in response to the papers purportedly filed on May 1, 2006 which are treated as a petition under 37 CFR 1.181. No fee is required.

Papers Originally Filed May 01, 2006

The papers purportedly filed May 1, 2006 as a continuation of PCT/EP2004/052293 were not located in the file. At the request of the undersigned, applicants submitted a copy of these papers along with a date-stamped postcard receipt.

MPEP § 503 lists procedures to ensure receipt of any paper filed in the USPTO. A postcard receipt which itemizes and properly identifies the papers which are being filed serves as *prima facie* evidence of receipt in the USPTO of all the items listed thereon on the date stamped thereon by the USPTO.

In this case, applicants provided a copy of the date-stamped postcard receipt for the documents submitted on May 1, 2006. The attorney docket number, title and inventor were listed on the postcard receipt. The postcard receipt records that the following papers were filed: Request for Filing a Continuation of an International Application Transmittal; 2 Sheets of Drawings; Application Data Sheet (3 pages); Specification - Total pages 21; Petition to Revive Continuation Application; Fee Sheet; and a Continuation of International Application" were received in the USPTO. The postcard receipt is stamped by the USPTO as received on "050106" across its face. Applicants included copies of the documents listed on the postcard receipt.

As such, applicants' have provided *prima facie* evidence that the aforementioned papers were originally received by the USPTO on May 1, 2006.

Applicants' petition under 37 CFR 1.181 is **GRANTED**.

Petition to Revive Under 37 CFR 1.137(b)

Applicants' included a petition to revive under 37 CFR 1.137(b) of a Continuation of PCT/EP2004/052293 with the papers filed May 1, 2006.

Applicants' petition under 37 CFR 1.137(b) is hereby **GRANTED** as to the present U.S. national application as follows:

International application PCT/EP2004/052293 became abandoned as to the United States of America for failure to pay the basic national fee by March 27, 2006 (March 25, 2006 was a Saturday). The filing of the above-captioned continuing application under 35 U.S.C. 111(a) on May 1, 2006 is accepted as an appropriate response under 37 CFR 1.137(b). The $1500.00 petition fee has been paid. Applicants' statement regarding the delay satisfies the requirement of 37 CFR 1.137(b)(3). Thus, all requirements of 37 CFR 1.137(b) are satisfied.

International application PCT/EP2004/052293 is being revived for purposes of continuity only and since continuity has been established by this decision reviving the international application, the international application is again abandoned in favor of the present continuing application number 11/415,254.

This application is being forwarded to the Office of Initial Patent Examination for further processing under 35 U.S.C. 111(a) with a filing date of May 1, 2006.

James Thomson

James Thomson
Attorney Advisor
Office of PCT Legal Administration

Tel.: (571) 272-3302

UNITED STATES PATENT AND TRADEMARK OFFICE

UNITED STATES DEPARTMENT OF COMMERCE
United States Patent and Trademark Office
Address: COMMISSIONER FOR PATENTS
P.O. Box 1450
Alexandria, Virginia 22313-1450
www.uspto.gov

APPLICATION NO.	FILING DATE	FIRST NAMED INVENTOR	ATTORNEY DOCKET NO.	CONFIRMATION NO.
11/415,259	04/30/2006	Chee Keat Fong	200506116-1	3245

7590 04/18/2008

HEWLETT-PACKARD COMPANY
Intellectual Property Administration
P.O. Box 272400
Fort Collins, CO 80527-2400

EXAMINER	
WEISKOPF, MARIE	

ART UNIT	PAPER NUMBER
3664	

MAIL DATE	DELIVERY MODE
04/18/2008	PAPER

DECISION GRANTING PETITION UNDER 37 CFR 1.138(d)

The declaration of express abandonment is recognized

This is in response to the petition under 37 CFR 1.138(d), requesting for a refund of any previously paid search fee and excess claims fee in the above-identified application.

The petition is granted.

The express abandonment is recognized. Any previously paid search fee and excess claims fee are hereby refunded.

Telephone inquiries should be directed to the Office of Data Management at (571) 272-4200.

Patent Publication Branch
Office of Data Management

Adjustment date: 04/21/2008 DTERRY
05/04/2006 HMARZI1 00000045 08202511415259
02 FC:1111 -500.00 CR

UNITED STATES PATENT AND TRADEMARK OFFICE

Commissioner for Patents
United States Patent and Trademark Office
P.O. Box 1450
Alexandria, VA 22313-1450
www.uspto.gov

BUTZEL LONG
IP DOCKETING DEPT
350 SOUTH MAIN STREET, SUITE 300
ANN ARBOR, MI 48104

COPY MAILED

AUG 07 2008

In re Application of :
Russell J. Wakeman et al :
Application No. 11/415,260 : ON PETITION
Filed: May 1, 2006 :
Attorney Docket No. 73874-28CP :

This is a decision on the petition filed May 1, 2008 under 37 CFR 1.137(b), to revive the above-identified application.

The petition is **GRANTED.**

The above-identified application became abandoned for failure to submit the Issue fee and Publication fee in a timely manner in reply to the Notice of Allowance mailed December 17, 2007, which set a statutory period for reply of three (3) months. Accordingly, the above-identified application became abandoned on March 18, 2008.

The petition satisfies the conditions for revival pursuant to the provisions of 37 CFR 1.137(b) in that (1) the reply in the form of payment of the Issue fee and Publication fee; (2) the petition fee; and (3) the required statement of unintentional delay have been received. Accordingly, the issue fee is accepted as having been unintentionally delayed.

The file does not indicate a change of address has been submitted, although the address given on the petition differs from the address of record. If appropriate, a change of address should be filed in accordance with MPEP 601.03. A courtesy copy of this decision is being mailed to the address given on the petition; however, the Office will mail all future correspondence solely to the address of record.

Telephone inquiries concerning this decision should be directed to the undersigned at (571) 272-3210. This matter is being referred to the Office of Data Management for further processing.

Irvin Dingle
Petitions Examiner
Office of Petitions

cc: Thomas T. Moga
Butze Long PC, Stoneridge West
41000 Woodward Avenue
Bloomfield Hills, MI 48304

UNITED STATES PATENT AND TRADEMARK OFFICE

Commissioner for Patents
United States Patent and Trademark Office
P.O. Box 1450
Alexandria, VA 22313-1450
www.uspto.gov

MCKENNA LONG & ALDRIDGE LLP
1900 K STREET, NW
WASHINGTON DC 20006

MAILED

JUN 18 2010

OFFICE OF PETITIONS

In re Patent No. 7,671,002	:	
Issue Date: March 2, 2010	:	
Application No. 11/415,266	:	ON PETITION
Filed: May 2, 2006	:	
Attorney Docket No. 8733.875.20	:	

This is a decision on the petition filed May 5, 2010, which is being treated as a request under 37 CFR 3.81(b)[1] to correct the name of the assignee on the front page of the above-identified patent by way of a Certificate of Correction.

The request is **GRANTED**.

Telephone inquiries concerning this decision may be directed to the undersigned at (571) 272-2991. Inquiries regarding the issuance of a certificate of correction should be directed to the Certificate of Correction Branch at (571) 272-4200.

The Certificates of Correction Branch will be notified of this decision granting the petition under 37 CFR 3.81(b) and directing issuance of the requested Certificate of Correction.

Terri Johnson
Petitions Examiner
Office of Petitions

[1] *See* MPEP 1309, subsection II; and Official Gazette of June 22, 2004.

UNITED STATES PATENT AND TRADEMARK OFFICE

Commissioner for Patents
United States Patent and Trademark Office
P.O. Box 1450
Alexandria, VA 22313-1450
www.uspto.gov

HUNTON & WILLIAMS LLP
INTELLECTUAL PROPERTY DEPARTMENT
1900 K STREET, N.W.
SUITE 1200
WASHINGTON DC 20006-1109

COPY MAILED

NOV 17 2008

OFFICE OF PETITIONS

In re Application of :
Weaver, Rose, Wood, Goodwin, Du, Phillips, Braddock, Patton, :
Lagaly, Barry, Jones, Harr :
Application No.:11/415,268 : DECISION ACCORDING
Filed: May 2, 2006 : RULE 47(a) STATUS
Attorney Docket No:54525.000118
Invention: **PNEUMATIC COMPESSOR**

This is in response to the petition under 37 CFR 1.47(a), filed November 22, 2006.

The petition is **GRANTED**.

The above-identified application and papers have been reviewed and found in compliance with 37 CFR 1.47(a). This application is hereby accorded Rule 1.47(a) status.

The above-cited application was filed on May 2, 2006, without a properly executed declaration. A Notice to File Missing Parts of Nonprovisional Application was mailed on May 24, 2006, allowing a shortened period for reply of two months from its mailing date. Extensions of the time set for reply were available pursuant to 37 CFR 1.136(a). The notice required a proper oath or declaration to be filed and payment of a surcharge. The instant petition was filed on November 22, 2006, with request for an extension of time within the fourth month.

Petitioner has shown that inventor Harr cannot be located and inventor Lagaly has refused to join the prosecution of the application. The above-identified application and papers have been reviewed and found in compliance with 37 CFR 1.47(a). This application is hereby accorded Rule 1.47(a) status.

As provided in Rule 1.47(c), this Office will forward notice of this application's filing to the non-signing inventor at the address given in the petition. Notice of the filing of this application will also be published in the Official Gazette.

This application will be forwarded to the Office of Data Management for further processing.

Telephone inquiries concerning this decision should be directed to the undersigned at (571) 272-3222.

Kenya A. McLaughlin
Petitions Attorney
Office of Petitions

UNITED STATES PATENT AND TRADEMARK OFFICE

UNITED STATES DEPARTMENT OF COMMERCE
United States Patent and Trademark Office
Address: COMMISSIONER FOR PATENTS
P.O. Box 1450
Alexandria, Virginia 22313-1450
www.uspto.gov

ANTONELLI, TERRY, STOUT & KRAUS, LLP
1300 NORTH SEVENTEENTH STREET
SUITE 1800
ARLINGTON, VA 22209-3873

Mail Date: 04/21/2010

Applicant	: Munenori Fukunishi	: DECISION ON REQUEST FOR
Patent Number	: 7598491	: RECALCULATION of PATENT
Issue Date	: 10/06/2009	: TERM ADJUSTMENT IN VIEW
Appliction No	: 11/415,286	: OF WYETH AND NOTICE OF INTENT TO
Filed	: 05/02/2006	: ISSUE CERTIFICATE OF CORRECTION
		:

The Request for Recalculation is **GRANTED** to the extent indicated.

The patent term adjustment has been determined to be **523** days. The USPTO will *sua sponte* issue a certificate of correction reflecting the amount of PTA days determined by the recalculation.

Prior to the issuance of the certificate of correction, the USPTO will afford patentee an opportunity to be heard and request reconsideration. Accordingly, patentee has **one month or thirty (30) days**, whichever is longer, to file a request for reconsideration of this patent term adjustment calculation. See 35 U.S.C. 154(b)(3)(B)(ii) and 37 CFR 1.322(a)(4). No extensions of time will be granted under 37 CFR 1.136.

Patentee should use document code PET.OP if electronically filing a request for reconsideration of this patent term adjustment calculation. The patentee must also include the information required by 37 CFR 1.705(b)(2) and the fee required by 37 CFR 1.18(e). If patentee does not file a timely request for reconsideration of this patent term adjustment calculation including the information required by 37 CFR 1.705(b)(2) and the fee required by 37 CFR 1.18(e), the USPTO will issue a certificate of correction reflecting the PTA determination noted above.

Patentee should be aware that in order to preserve the right to review in the United States District Court for the District of Columbia of the USPTO patent term adjustment determination, patentee must ensure that he or she also take the steps required under 35 U.S.C. 154(b)(4)(A) in a timely manner. Nothing in the request for recalculation should be construed as providing an alternative time frame for commencing a civil action under 35 U.S.C. 154(b)(4)(A).

Any questions concerning this decision should be directed to the Office of Patent Legal Administration at 571-272-7702.

UNITED STATES PATENT AND TRADEMARK OFFICE

UNITED STATES DEPARTMENT OF COMMERCE
United States Patent and Trademark Office
Address: COMMISSIONER FOR PATENTS
P.O. Box 1450
Alexandria, Virginia 22313-1450
www.uspto.gov

APPLICATION NO.	FILING DATE	FIRST NAMED INVENTOR	ATTORNEY DOCKET NO.	CONFIRMATION NO.
11/415,310	05/02/2006	Masakuni Osoegawa	290487US2SCONT	3945

7590 03/03/2008

OBLON, SPIVAK, MCCLELLAND MAIER & NEUSTADT, P.C.
1940 DUKE STREET
ALEXANDRIA, VA 22314

EXAMINER	
HINES, ANNE M	

ART UNIT	PAPER NUMBER
2879	

NOTIFICATION DATE	DELIVERY MODE
03/03/2008	ELECTRONIC

DECISION GRANTING PETITION UNDER 37 CFR 1.138(d)

The declaration of express abandonment is recognized

This is in response to the petition under 37 CFR 1.138(d), requesting for a refund of any previously paid search fee and excess claims fee in the above-identified application.

The petition is granted.

The express abandonment is recognized. Any previously paid search fee and excess claims fee are hereby refunded.

Telephone inquiries should be directed to the Office of Data Management at (571) 272-4200.

Patent Publication Branch
Office of Data Management

UNITED STATES PATENT AND TRADEMARK OFFICE

UNITED STATES DEPARTMENT OF COMMERCE
United States Patent and Trademark Office
Address: COMMISSIONER FOR PATENTS
P.O. Box 1450
Alexandria, Virginia 22313-1450
www.uspto.gov

APPLICATION NO.	FILING DATE	FIRST NAMED INVENTOR	ATTORNEY DOCKET NO.	CONFIRMATION NO.
11/415,310	05/02/2006	Masakuni Osoegawa	290487US2SCONT	3945

7590 03/03/2008

OBLON, SPIVAK, MCCLELLAND MAIER & NEUSTADT, P.C.
1940 DUKE STREET
ALEXANDRIA, VA 22314

EXAMINER	
HINES, ANNE M	

ART UNIT	PAPER NUMBER
2879	

NOTIFICATION DATE	DELIVERY MODE
03/03/2008	ELECTRONIC

DECISION GRANTING PETITION UNDER 37 CFR 1.138(d)

The declaration of express abandonment is recognized

This is in response to the petition under 37 CFR 1.138(d), requesting for a refund of any previously paid search fee and excess claims fee in the above-identified application.

The petition is granted.

The express abandonment is recognized. Any previously paid search fee and excess claims fee are hereby refunded.

Telephone inquiries should be directed to the Office of Data Management at (571) 272-4200.

Patent Publication Branch
Office of Data Management

```
Adjustment date: 03/04/2008  KKING1
05/04/2006 MBERHE   00000031 11415310
02 FC:1111                    -500.00 DP
04 FC:1202                     -50.00 DP
05 FC:1201                    -600.00 DP
06 FC:1203                    -360.00 DP


Refund Ref:
03/04/2008          0030051445
---------------------------------------

Credit Card Refund Total:     $1510.00

Am Exp..: XXXXXXXXXXX1006
```

UNITED STATES PATENT AND TRADEMARK OFFICE

UNITED STATES DEPARTMENT OF COMMERCE
United States Patent and Trademark Office
Address: COMMISSIONER FOR PATENTS
P.O. Box 1450
Alexandria, Virginia 22313-1450
www.uspto.gov

SPRINT
6391 SPRINT PARKWAY
KSOPHT0101-Z2100
OVERLAND PARK, KS 66251-2100

Mail Date: 04/21/2010

Applicant	: Jeremy R. Breau	: DECISION ON REQUEST FOR
Patent Number	: 7606191	: RECALCULATION of PATENT
Issue Date	: 10/20/2009	: TERM ADJUSTMENT IN VIEW
Appliction No	: 11/415,317	: OF WYETH AND NOTICE OF INTENT TO
Filed	: 05/01/2006	: ISSUE CERTIFICATE OF CORRECTION
		:

The Request for Recalculation is **GRANTED** to the extent indicated.

The patent term adjustment has been determined to be **709** days. The USPTO will *sua sponte* issue a certificate of correction reflecting the amount of PTA days determined by the recalculation.

Prior to the issuance of the certificate of correction, the USPTO will afford patentee an opportunity to be heard and request reconsideration. Accordingly, patentee has **one month or thirty (30) days**, whichever is longer, to file a request for reconsideration of this patent term adjustment calculation. See 35 U.S.C. 154(b)(3)(B)(ii) and 37 CFR 1.322(a)(4). No extensions of time will be granted under 37 CFR 1.136.

Patentee should use document code PET.OP if electronically filing a request for reconsideration of this patent term adjustment calculation. The patentee must also include the information required by 37 CFR 1.705(b)(2) and the fee required by 37 CFR 1.18(e). If patentee does not file a timely request for reconsideration of this patent term adjustment calculation including the information required by 37 CFR 1.705(b)(2) and the fee required by 37 CFR 1.18(e), the USPTO will issue a certificate of correction reflecting the PTA determination noted above.

Patentee should be aware that in order to preserve the right to review in the United States District Court for the District of Columbia of the USPTO patent term adjustment determination, patentee must ensure that he or she also take the steps required under 35 U.S.C. 154(b)(4)(A) in a timely manner. Nothing in the request for recalculation should be construed as providing an alternative time frame for commencing a civil action under 35 U.S.C. 154(b)(4)(A).

Any questions concerning this decision should be directed to the Office of Patent Legal Administration at 571-272-7702.

UNITED STATES PATENT AND TRADEMARK OFFICE

UNITED STATES DEPARTMENT OF COMMERCE
United States Patent and Trademark Office
Address: COMMISSIONER FOR PATENTS
P.O. Box 1450
Alexandria, Virginia 22313-1450
www.uspto.gov

DAVIS WRIGHT TREMAINE, LLP/Seattle
1201 Third Avenue, Suite 2200
SEATTLE, WA 98101-3045

Mail Date: 04/27/2010

Applicant	: Mark L. Gonzalgo	: DECISION ON REQUEST FOR
Patent Number	: 7662563	: RECALCULATION of PATENT
Issue Date	: 02/16/2010	: TERM ADJUSTMENT IN VIEW
Application No	: 11/415,322	: OF WYETH AND NOTICE OF INTENT TO
Filed	: 05/01/2006	: ISSUE CERTIFICATE OF CORRECTION
		:

The Request for Recalculation is **GRANTED** to the extent indicated.

The patent term adjustment has been determined to be **240** days. The USPTO will *sua sponte* issue a certificate of correction reflecting the amount of PTA days determined by the recalculation.

Prior to the issuance of the certificate of correction, the USPTO will afford patentee an opportunity to be heard and request reconsideration. Accordingly, patentee has **one month or thirty (30) days**, whichever is longer, to file a request for reconsideration of this patent term adjustment calculation. See 35 U.S.C. 154(b)(3)(B)(ii) and 37 CFR 1.322(a)(4). No extensions of time will be granted under 37 CFR 1.136.

Patentee should use document code PET.OP if electronically filing a request for reconsideration of this patent term adjustment calculation. The patentee must also include the information required by 37 CFR 1.705(b)(2) and the fee required by 37 CFR 1.18(e). If patentee does not file a timely request for reconsideration of this patent term adjustment calculation including the information required by 37 CFR 1.705(b)(2) and the fee required by 37 CFR 1.18(e), the USPTO will issue a certificate of correction reflecting the PTA determination noted above.

Patentee should be aware that in order to preserve the right to review in the United States District Court for the District of Columbia of the USPTO patent term adjustment determination, patentee must ensure that he or she also take the steps required under 35 U.S.C. 154(b)(4)(A) in a timely manner. Nothing in the request for recalculation should be construed as providing an alternative time frame for commencing a civil action under 35 U.S.C. 154(b)(4)(A).

Any questions concerning this decision should be directed to the Office of Patent Legal Administration at 571-272-7702.

UNITED STATES PATENT AND TRADEMARK OFFICE

UNITED STATES DEPARTMENT OF COMMERCE
United States Patent and Trademark Office
Address: COMMISSIONER FOR PATENTS
P.O. Box 1450
Alexandria, Virginia 22313-1450
www.uspto.gov

MEDTRONIC
Attn: Noreen Johnson - IP Legal Department
2600 Sofamor Danek Drive
MEMPHIS, TN 38132

Mail Date: 04/27/2010

Applicant	: Anthony J. Melkent	: DECISION ON REQUEST FOR
Patent Number	: 7658766	: RECALCULATION of PATENT
Issue Date	: 02/09/2010	: TERM ADJUSTMENT IN VIEW
Application No	: 11/415,325	: OF WYETH AND NOTICE OF INTENT TO
Filed	: 05/01/2006	: ISSUE CERTIFICATE OF CORRECTION
		:

The Request for Recalculation is **GRANTED** to the extent indicated.

The patent term adjustment has been determined to be **126** days. The USPTO will *sua sponte* issue a certificate of correction reflecting the amount of PTA days determined by the recalculation.

Prior to the issuance of the certificate of correction, the USPTO will afford patentee an opportunity to be heard and request reconsideration. Accordingly, patentee has **one month or thirty (30) days**, whichever is longer, to file a request for reconsideration of this patent term adjustment calculation. See 35 U.S.C. 154(b)(3)(B)(ii) and 37 CFR 1.322(a)(4). No extensions of time will be granted under 37 CFR 1.136.

Patentee should use document code PET.OP if electronically filing a request for reconsideration of this patent term adjustment calculation. The patentee must also include the information required by 37 CFR 1.705(b)(2) and the fee required by 37 CFR 1.18(e). If patentee does not file a timely request for reconsideration of this patent term adjustment calculation including the information required by 37 CFR 1.705(b)(2) and the fee required by 37 CFR 1.18(e), the USPTO will issue a certificate of correction reflecting the PTA determination noted above.

Patentee should be aware that in order to preserve the right to review in the United States District Court for the District of Columbia of the USPTO patent term adjustment determination, patentee must ensure that he or she also take the steps required under 35 U.S.C. 154(b)(4)(A) in a timely manner. Nothing in the request for recalculation should be construed as providing an alternative time frame for commencing a civil action under 35 U.S.C. 154(b)(4)(A).

Any questions concerning this decision should be directed to the Office of Patent Legal Administration at 571-272-7702.

UNITED STATES PATENT AND TRADEMARK OFFICE

UNITED STATES DEPARTMENT OF COMMERCE
United States Patent and Trademark Office
Address: COMMISSIONER FOR PATENTS
P.O. Box 1450
Alexandria, Virginia 22313-1450
www.uspto.gov

REISING ETHINGTON P.C.
P O BOX 4390
TROY, MI 48099-4390

Mail Date: 04/21/2010

Applicant	: Marc Savoie	: DECISION ON REQUEST FOR
Patent Number	: 7597033	: RECALCULATION of PATENT
Issue Date	: 10/06/2009	: TERM ADJUSTMENT IN VIEW
Appliction No	: 11/415,330	: OF WYETH AND NOTICE OF INTENT TO
Filed	: 05/01/2006	: ISSUE CERTIFICATE OF CORRECTION
		:

The Request for Recalculation is **GRANTED** to the extent indicated.

The patent term adjustment has been determined to be **548** days. The USPTO will *sua sponte* issue a certificate of correction reflecting the amount of PTA days determined by the recalculation.

Prior to the issuance of the certificate of correction, the USPTO will afford patentee an opportunity to be heard and request reconsideration. Accordingly, patentee has **one month or thirty (30) days**, whichever is longer, to file a request for reconsideration of this patent term adjustment calculation. See 35 U.S.C. 154(b)(3)(B)(ii) and 37 CFR 1.322(a)(4). No extensions of time will be granted under 37 CFR 1.136.

Patentee should use document code PET.OP if electronically filing a request for reconsideration of this patent term adjustment calculation. The patentee must also include the information required by 37 CFR 1.705(b)(2) and the fee required by 37 CFR 1.18(e). If patentee does not file a timely request for reconsideration of this patent term adjustment calculation including the information required by 37 CFR 1.705(b)(2) and the fee required by 37 CFR 1.18(e), the USPTO will issue a certificate of correction reflecting the PTA determination noted above.

Patentee should be aware that in order to preserve the right to review in the United States District Court for the District of Columbia of the USPTO patent term adjustment determination, patentee must ensure that he or she also take the steps required under 35 U.S.C. 154(b)(4)(A) in a timely manner. Nothing in the request for recalculation should be construed as providing an alternative time frame for commencing a civil action under 35 U.S.C. 154(b)(4)(A).

Any questions concerning this decision should be directed to the Office of Patent Legal Administration at 571-272-7702.

UNITED STATES PATENT AND TRADEMARK OFFICE

Commissioner for Patents
United States Patent and Trademark Office
P.O. Box 1450
Alexandria, VA 22313-1450
www.uspto.gov

COPY MAILED

NOV 1 2 2009

OFFICE OF PETITIONS

JES LYSGAARD PEDERSEN
HEDEBOVEJ 9
KOGE DK-46-00 DK DENMARK

In re Application of
Jes Lysgaard Pedersen
Application No. 11/415,353
Filed: April 29, 2006
Attorney Docket No.

ON PETITION

This is a decision on the paper filed March 20, 2009 which is being treated as a petition under 37 CFR 1.137(b) to revive the above-identified application.

The petition is **DISMISSED.**

Any request for reconsideration of this decision must be submitted within TWO (2) MONTHS from the mail date of this decision. Extensions of time under 37 CFR 1.136(a) are permitted. The reconsideration request should include a cover letter entitled "**Renewed Petition under 37 CFR 1.137(b)**." This is **not** final agency action within the meaning of 5 U.S.C. § 704.

The application became abandoned for failure to timely file a reply within the meaning of 37 CFR 1.113 to the final Office action of January 9, 2008. Applicant was given three (3) months to properly reply. Accordingly, this application became abandoned on April 10, 2008.

A grantable petition under 37 CFR 1.137(b) must be accompanied by: (1) the required reply, unless previously filed; (2) the petition fee as set forth in 37 CFR 1.17(m); (3) a statement that the entire delay in filing the required reply from the due date for the reply until the filing of a grantable petition pursuant to 37 CFR 1.137(b) was unintentional; and (4) any terminal disclaimer (and fee as set forth in 37 CFR 1.20(d)) required by 37 CFR 1.137(c). Where there is a question as to whether either the abandonment or the delay in filing a petition under 37 CFR 1.137 was unintentional, the Commissioner may require additional information. See MPEP 711.03(c)(III)(C) and (D). The instant petition lack(s) item(s) (1), (2) and (3).

As to item (1), the proposed reply required for consideration of a petition to revive must be a Notice of Appeal (and appeal fee required by 37 CFR 41.20(b)(2)), an amendment that *prima facie* places the application in condition for allowance, a Request for Continued Examination (RCE) and submission (37 CFR 1.114), or the filing of a continuing application under 37 CFR 1.53(b). *See* MPEP 711.03(c)(III)(A)(2). Since the paper submitted January 28, 2008 is not one of the above listed requirements, this petition can not be treated.

As to item (2), the petition to revive unintentionally abandoned application under 37 CFR 1.137(b) fee (Small Entity) is $810. This petition can not be treated until the $810 petition fee is received.

As to item (3), a statement that the entire delay in filing the required reply from the due date for the reply until the filing of a grantable petition pursuant to 37 CFR 1.137(b) was unintentional is required.

Further correspondence with respect to this matter should be addressed as follows:

By mail: Mail Stop PETITIONS
Commissioner for Patents
Post Office Box 1450
Alexandria, VA 22313-1450

By hand: Customer Service Window
Randolph Building
401 Dulany Street
Alexandria, VA 22314

By facsimile: (571) 273-8300
ATTN: Office of Petitions

Telephone inquiries concerning this decision should be directed to the undersigned at (571) 272-3210.

Irvin Dingle
Petitions Examiner
Office of Petitions

Attachment: petition to revive unintentionally abandoned application under 37 CFR 1.137(b) form.

UNITED STATES PATENT AND TRADEMARK OFFICE

UNITED STATES DEPARTMENT OF COMMERCE
United States Patent and Trademark Office
Address: COMMISSIONER FOR PATENTS
P.O. Box 1450
Alexandria, Virginia 22313-1450
www.uspto.gov

MBHB/TRADING TECHNOLOGIES
300 SOUTH WACKER DRIVE
SUITE 3200
CHICAGO, IL 60606

Mail Date: 04/20/2010

Applicant	: Alvin F. Tanpoco	: DECISION ON REQUEST FOR
Patent Number	: 7599868	: RECALCULATION of PATENT
Issue Date	: 10/06/2009	: TERM ADJUSTMENT IN VIEW
Appliction No	: 11/415,356	: OF WYETH AND NOTICE OF INTENT TO
Filed	: 05/01/2006	: ISSUE CERTIFICATE OF CORRECTION
		:

The Request for Recalculation is **GRANTED** to the extent indicated.

The patent term adjustment has been determined to be **56** days. The USPTO will *sua sponte* issue a certificate of correction reflecting the amount of PTA days determined by the recalculation.

Prior to the issuance of the certificate of correction, the USPTO will afford patentee an opportunity to be heard and request reconsideration. Accordingly, patentee has **one month or thirty (30) days,** whichever is longer, to file a request for reconsideration of this patent term adjustment calculation. See 35 U.S.C. 154(b)(3)(B)(ii) and 37 CFR 1.322(a)(4). No extensions of time will be granted under 37 CFR 1.136.

Patentee should use document code PET.OP if electronically filing a request for reconsideration of this patent term adjustment calculation. The patentee must also include the information required by 37 CFR 1.705(b)(2) and the fee required by 37 CFR 1.18(e). If patentee does not file a timely request for reconsideration of this patent term adjustment calculation including the information required by 37 CFR 1.705(b)(2) and the fee required by 37 CFR 1.18(e), the USPTO will issue a certificate of correction reflecting the PTA determination noted above.

Patentee should be aware that in order to preserve the right to review in the United States District Court for the District of Columbia of the USPTO patent term adjustment determination, patentee must ensure that he or she also take the steps required under 35 U.S.C. 154(b)(4)(A) in a timely manner. Nothing in the request for recalculation should be construed as providing an alternative time frame for commencing a civil action under 35 U.S.C. 154(b)(4)(A).

Any questions concerning this decision should be directed to the Office of Patent Legal Administration at 571-272-7702.

UNITED STATES PATENT AND TRADEMARK OFFICE

Commissioner for Patents
United States Patent and Trademark Office
P.O. Box 1450
Alexandria, VA 22313-1450
www.uspto.gov

SCHWEGMAN, LUNDBERG
& WOESSNER, P.A.
P.O. BOX 2938
MINNEAPOLIS, MN 55402

COPY MAILED

OCT 01 2007

OFFICE OF PETITIONS

In re Application of :
J. Thomas VAUGHAN, et al :
Application No. 11/415,366 : DECISION ON PETITION
Filed: May 1, 2006 : TO WITHDRAW
Attorney Docket No. 600.499US4 : FROM RECORD
:

This is a decision on the Request to Withdraw as attorney or agent of record under 37 C.F.R. § 1.36(b), filed May 9, 2007.

The request is **APPROVED**.

A grantable request to withdraw as attorney/agent of record must be signed by every attorney/agent seeking to withdraw or contain a clear indication that one attorney is signing on behalf of another/others. A request to withdraw will not be approved unless at least 30 (thirty) days would remain between the date of approval and the later of the expiration date of a time to file a response or the expiration date of the maximum time period which can be extended under 37 C.F.R. § 1.136(a).

The request was signed by David W. Black on behalf of all attorneys of record who are associated with customer No. 21186.

All attorneys/agents of record have been withdrawn.

Applicant is reminded that there is no attorney of record at this time.

The request to change the correspondence of record is not acceptable as the requested correspondence address is not that of: (1) the first named signing inventor; or (2) an intervening assignee of the entire interest under 37 C.F.R 3.71. All future communications from the Office will be directed to the first named signing inventor at the first copied address below until otherwise properly notified by the applicant.

There is an outstanding Office action mailed July 11, 2007 that requires a response by the applicant.

Telephone inquiries concerning this decision should be directed to Diane Goodwyn at 571-272-6735.

April Wise
Petitions Examiner
Office of Petitions

cc: J. THOMAS VAUGHAN
504 SOUTH FIFTH STREET
STILLWATER, MN 55082

cc: GLENN M. SEAGER
CROMPTON SEAGER TUFTE LLC
1221 NICOLLET AVENUE,
SUITE 800
MINNEAPOLIS, MN 55403-2420

UNITED STATES PATENT AND TRADEMARK OFFICE

UNITED STATES DEPARTMENT OF COMMERCE
United States Patent and Trademark Office
Address: COMMISSIONER FOR PATENTS
P.O. Box 1450
Alexandria, Virginia 22313-1450
www.uspto.gov

APPLICATION NUMBER	FILING OR 371 (c) DATE	FIRST NAMED APPLICANT	ATTY. DOCKET NO./TITLE
11/415,366	05/01/2006	J. Thomas Vaughan	600.499US4

CONFIRMATION NO. 2905

21186
SCHWEGMAN, LUNDBERG & WOESSNER, P.A.
P.O. BOX 2938
MINNEAPOLIS, MN 55402

OC000000025533744

Date Mailed: 08/23/2007

NOTICE REGARDING CHANGE OF POWER OF ATTORNEY

This is in response to the Power of Attorney filed 05/09/2007.

- The withdrawal as attorney in this application has been accepted. Future correspondence will be mailed to the new address of record. 37 CFR 1.33.

Diane Goodwyn

Office of Initial Patent Examination (571) 272-4000, or 1-800-PTO-9199
FORMER ATTORNEY/AGENT COPY

UNITED STATES PATENT AND TRADEMARK OFFICE

Commissioner for Patents
United States Patent and Trademark Office
P.O. Box 1450
Alexandria, VA 22313-1450
www.uspto.gov

FOLEY & LARDNER LLP
777 EAST WISCONSIN AVENUE
MILWAUKEE WI 53202-5306

MAILED

JAN 30 2009

OFFICE OF PETITIONS

In re Application of	:	
RICHARD P. WELTY	:	LETTER REGARDING PATENT
Application No. 11/415,369	:	TERM ADJUSTMENT
Filed: May 1, 2006	:	
Attorney Docket No. 081149-0125	:	

This letter is in response to the "COMMUNICATION REGARDING PATENT TERM ADJUSTMENT," filed November 17, 2008. Pursuant to applicant's duty of good faith and candor to the Office, applicant requests that the determination of patent term adjustment under 35 U.S.C. 154(b) be reviewed for accuracy. Applicants state that the patent term adjustment should be corrected from 421 days to 417 days.

The request for review of the determination of patent term adjustment is **granted**.

The Office has updated the PAIR screen to reflect that the correct Patent Term Adjustment (PTA) determination at the time of the mailing of the notice of allowance is **417 days**. A copy of the updated PAIR screen, showing the correct determination, is enclosed.

On August 21, 2008, the Office mailed the Determination of Patent Term Adjustment under 35 U.S.C. 154(b) in the above-identified application. The Notice stated that the patent term adjustment to date is 417 days. However, the Patent Application Information Retrieval (PAIR) showed the patent term adjustment to date as 421 days. On November 17, 2008, applicant submitted the instant comment.

Applicant states that the patent term adjustment of 417 days, as indicated in the notice of allowance, agrees with applicant's own PTA calculation, but disagrees with the patent term adjustment of 421 days as indicated in PAIR. Therefore, applicant requests a review of the calculation of patent term adjustment for the above-identified application.

The application history has been reviewed and it has been concluded that the determination of patent term adjustment under 35 U.S.C. 154(b) of 421 days is incorrect.

A review of record reveals that the PTA Calculations viewable on PAIR incorrectly reflects the date of mailing of the notice of allowance as August 25, 2008, instead of August 21, 2008. Thus, the date of August 21, 2008, instead of August 25, 2008, should have been used for calculating PTA.

In accordance with 37 CFR 1.703(a)(1), the period of adjustment of the term of the patent should be reduced by 417 days, the number of days in the period beginning on the day after the date that is fourteen months after the date on which the application was filed under 35 U.S.C. 111(a), July 2, 2007, and ending on the date of mailing of either an action under 35 U.S.C. 132, or a notice of allowance under 35 U.S.C. 151, whichever occurs first, August 21, 2008. Accordingly, the period of adjustment of 421 days will be removed and a period of adjustment of 417 days will be entered.

In view thereof, the correct patent term adjustment at the time of the mailing of the notice of allowance is **417 days** (417 days of Office delay - 0 days of applicant delay).

As this letter was submitted as an advisement to the Office of an error in applicant's favor, the Office will not assess the $200.00 fee as set forth in 37 CFR 1.18(e). The Office thanks applicant for applicant's good faith and candor in bringing this to the attention of the Office.

Applicant is reminded that any delays by the Office pursuant to 37 CFR 1.702(a)(4) and 1.702(b) and any applicant delays under 37 CFR 1.704(c)(10) will be calculated at the time of the issuance of the patent and applicant will be notified in the Issue Notification letter that is mailed to applicant approximately three weeks prior to issuance.

The Office of Data Management has been advised of this decision. This matter is being referred to the Office of Data Management for issuance of the patent.

Telephone inquiries regarding this matter should be directed to Christina Tartera Donnell, Senior Petitions Attorney, at (571) 272-3211.

Kery A. Fries

Kery A. Fries
Senior Legal Advisor
Office of Legal Administration

Enclosure: Copy of updated PAIR screen

UNITED STATES PATENT AND TRADEMARK OFFICE

Commissioner for Patents
United States Patent and Trademark Office
P.O. Box 1450
Alexandria, VA 22313-1450
www.uspto.gov

COPY MAILED

JUN 1 8 2008

LOTT & FRIEDLAND, P.A.
ONE EAST BROWARD BLVD.
SUITE 1609
FORT LAUDERDALE FL 33301

In re Application of

MUNDSCHENK, David D.
Application No. 11/415,377
Filed: May 01, 2006
Attorney Docket No. **02120-1-002010**

DECISION ON PETITION
TO WITHDRAW
FROM RECORD

This is a decision on the Request to Withdraw as attorney or agent of record under 37 C.F.R. § 1.36(b), filed May 05, 2008.

The request is **NOT APPROVED**.

A grantable request to withdraw as attorney/agent of record must be signed by every attorney/agent seeking to withdraw or contain a clear indication that one attorney is signing on behalf of another/others. A request to withdraw will not be approved unless at least 30 (thirty) days would remain between the date of approval and the later of the expiration date of a time to file a response or the expiration date of the maximum time period which can be extended under 37 C.F.R. § 1.136(a).

The Office cannot approve the request at this time since the reasons provided do not meet any of the conditions under the mandatory or permissive categories enumerated in 37 CFR 10.40. Section 10.40 of Title 37 of the Code of Federal Regulation states, "[a] practitioner shall not withdraw from employment in a proceeding before the Office without permission from the Office[.]" More specifically, 37 CFR 10.40 states, "[i]f paragraph (b) of this section is not applicable, a practitioner may not request permission to withdraw in matter pending before the Office unless such request or such withdrawal is" for one the permissive reasons listed in 37 CFR 10.40(c). The reasons set forth in the request, applicants have retained new counsel, does not meet any of the conditions set forth in 37 CFR 10.40.

All future communications from the Office will continue to be directed to the above-listed address until otherwise notified by applicant.

Telephone inquiries concerning this decision should be directed to Tredelle Jackson at 571-272- 2783.

Tredelle D. Jackson
Petitions Examiner
Office of Petitions

cc: **MCDONNELL, BOEHNEN, HULBERT & BERGHOFF, LLP**
ATTN: ANITA TERPSTRA, ESQ.
300 SOUTH WACKER DRIVE
CHICAGO, IL 60606

UNITED STATES PATENT AND TRADEMARK OFFICE

Commissioner for Patents
United States Patent and Trademark Office
P.O. Box 1450
Alexandria, VA 22313-1450
www.uspto.gov

LOTT & FRIEDLAND, P.A.
ONE EAST BROWARD BLVD.
SUITE 1609
FORT LAUDERDALE, FL 33301

COPY MAILED

JUL 16 2008

In re Application of
MUNDSCHENK, David D.
Application No. 11/415,377
Filed: May 01, 2006
Attorney Docket No. **08-559-CON**

DECISION ON PETITION
TO WITHDRAW
FROM RECORD

This is a decision on the Request to Withdraw as attorney or agent of record under 37 C.F.R. § 1.36(b), filed June 23, 2008.

The request is **NOT APPROVED** as moot.

A review of the file record indicates that the power of attorney to LOTT & FRIEDLAND, P.A. has been revoked by the assignee of the patent application on June 26, 2008. Accordingly, the request to withdraw under 37 C.F.R. § 1.36(b) is moot.

All future communications from the Office will continue to be directed to the below-listed address until otherwise notified by applicant.

Telephone inquires concerning this decision should be directed to Tredelle Jackson at 571-272-2783.

Tredelle D. Jackson
Paralegal Specialist
Office of Petitions

cc: **MCDONNELL BOEHNEN HULBERT & BERGHOFF LLP**
300 S. WACKER DRIVE
32ND FLOOR
CHICAGO IL 60606

UNITED STATES PATENT AND TRADEMARK OFFICE

Commissioner for Patents
United States Patent and Trademark Office
P.O. Box 1450
Alexandria, VA 22313-1450
www.uspto.gov

MBHB/TRADING TECHNOLOGIES
300 SOUTH WACKER DRIVE
SUITE 3200
CHICAGO IL 60606

COPY MAILED

DEC 1 1 2009

OFFICE OF PETITIONS

In re Application of :
Gerald J. O'Connor et al. :
Application No. 11/415,380 : DECISION ON PETITION
Filed: May 1, 2006 : UNDER 37 CFR 1.137(b)
Attorney Docket No. 05-516-Z :

This is a decision on the petition, filed October 1, 2009, which is being treated as a petition under 37 CFR 1.137(b) to revive the instant nonprovisional application for failure to timely notify the U.S. Patent and Trademark (USPTO) of the filing of an application in a foreign country, or under a multinational treaty that requires publication of applications eighteen months after filing. *See* 37 CFR 1.137(f).

The petition is **GRANTED**.

Petitioner states that the instant nonprovisional application is the subject of an application filed in an eighteen-month publication country on June 2, 2006. However, the USPTO was unintentionally not notified of this filing within 45 days subsequent to the filing of the subject application in an eighteen-month publication country.

In view of the above, this application became abandoned pursuant to 35 U.S.C. § 122(b)(2)(B)(iii) and 37 CFR 1.213(c) for failure to timely notify the Office of the filing of an application in a foreign country or under a multilateral international agreement that requires publication of applications 18 months after filing.

A petition to revive an application abandoned pursuant to 35 U.S.C. 122(b)(2)(B)(iii) for failure to notify the USPTO of a foreign filing must be accompanied by:

(1) the required reply which is met by the notification of such filing in a foreign country or under a multinational treaty;
(2) the petition fee as set forth in 37 CFR 1.17(m); and
(3) a statement that the entire delay in filing the required reply from the due date of the reply until the filing of a grantable petition was unintentional.

The instant petition has been found to be in compliance with 37 CFR 1.137(b). Accordingly, the failure to timely notify the USPTO of a foreign or international filing within 45 days after the date of filing of such foreign or international application as provided by 35 U.S.C. § 122(b)(2)(B)(iii) and 37 CFR 1.213(c) is accepted as having been unintentionally delayed.

The previous Request and Certification under 35 U.S.C. § 122(b)(2)(B)(i) has been rescinded. A Notice Regarding Rescission of Nonpublication Request which sets forth the projected publication date of March 18, 2010, accompanies this decision on petition.

Telephone inquiries concerning this decision should be directed to JoAnne Burke at (571) 272-4584.

This application is being forward to Technology Center Art Unit 3693 for examination in due course.

Ramesh Krishnamurthy
Petitions Examiner
Office of Petitions

ATTACHMENT: Notice Regarding Rescission of Nonpublication Request

UNITED STATES PATENT AND TRADEMARK OFFICE

UNITED STATES DEPARTMENT OF COMMERCE
United States Patent and Trademark Office
Address: COMMISSIONER FOR PATENTS
P.O. Box 1450
Alexandria, Virginia 22313-1450
www.uspto.gov

APPLICATION NUMBER	FILING OR 371(C) DATE	FIRST NAMED APPLICANT	ATTY. DOCKET NO./TITLE
11/415,380	05/01/2006	Gerald J. O'Connor	05-516-Z

CONFIRMATION NO. 2933

39310
MBHB/TRADING TECHNOLOGIES
300 SOUTH WACKER DRIVE
SUITE 3200
CHICAGO, IL 60606

NONPUBLICATION RESCISSION LETTER

OC000000039170411

Date Mailed: 12/10/2009

Communication Regarding Rescission Of Nonpublication Request and/or Notice of Foreign Filing

Applicant's rescission of the previously-filed nonpublication request and/or notice of foreign filing is acknowledged. The paper has been reflected in the Patent and Trademark Office's (USPTO's) computer records so that the earliest possible projected publication date can be assigned.

The projected publication date is 03/18/2010.

If applicant rescinded the nonpublication request before or on the date of "foreign filing,"[1] then no notice of foreign filing is required.

If applicant foreign filed the application after filing the above application and before filing the rescission, and the rescission did not also include a notice of foreign filing, then a notice of foreign filing (not merely a rescission) is required to be filed within 45 days of the date of foreign filing. See 35 U.S.C. § 122(b)(2)(B)(iii), and Clarification of the United States Patent and Trademark Office's Interpretation of the Provisions of 35 U.S.C. § 122(b)(2)(B)(ii)-(iv), 1272 Off. Gaz. Pat. Office 22 (July 1, 2003).

If a notice of foreign filing is required and is not filed within 45 days of the date of foreign filing, then the application becomes abandoned pursuant to 35 U.S.C. § 122(b)(2)(B)(iii). In this situation, applicant should either file a petition to revive or notify the Office that the application is abandoned. See 37 CFR 1.137(f). Any such petition to revive will be forwarded to the Office of Petitions for a decision. Note that the filing of the petition will not operate to stay any period of reply that may be running against the application.

Questions regarding petitions to revive should be directed to the Office of Petitions at (571) 272-3282.

[1] Note, for purpose of this notice, that "foreign filing" means "filing an application directed to the same invention in another country, or under a multilateral international agreement, that requires publication of applications 18 months after filing".

/jlburke/

Office of Data Management, Application Assistance Unit (571) 272-4000, or (571) 272-4200, or 1-888-786-0101

UNITED STATES PATENT AND TRADEMARK OFFICE

UNITED STATES DEPARTMENT OF COMMERCE
United States Patent and Trademark Office
Address: COMMISSIONER FOR PATENTS
P.O. Box 1450
Alexandria, Virginia 22313-1450
www.uspto.gov

GARDERE WYNNE SEWELL LLP
INTELLECTUAL PROPERTY SECTION
3000 THANKSGIVING TOWER
1601 ELM ST
DALLAS, TX 75201-4761

Mail Date: 04/21/2010

Applicant	: Jean-Christophe Giraudin	: DECISION ON REQUEST FOR
Patent Number	: 7667292	: RECALCULATION of PATENT
Issue Date	: 02/23/2010	: TERM ADJUSTMENT IN VIEW
Appliction No	: 11/415,393	: OF WYETH AND NOTICE OF INTENT TO
Filed	: 05/01/2006	: ISSUE CERTIFICATE OF CORRECTION
		:

The Request for Recalculation is **GRANTED** to the extent indicated.

The patent term adjustment has been determined to be **85** days. The USPTO will *sua sponte* issue a certificate of correction reflecting the amount of PTA days determined by the recalculation.

Prior to the issuance of the certificate of correction, the USPTO will afford patentee an opportunity to be heard and request reconsideration. Accordingly, patentee has **one month or thirty (30) days**, whichever is longer, to file a request for reconsideration of this patent term adjustment calculation. See 35 U.S.C. 154(b)(3)(B)(ii) and 37 CFR 1.322(a)(4). No extensions of time will be granted under 37 CFR 1.136.

Patentee should use document code PET.OP if electronically filing a request for reconsideration of this patent term adjustment calculation. The patentee must also include the information required by 37 CFR 1.705(b)(2) and the fee required by 37 CFR 1.18(e). If patentee does not file a timely request for reconsideration of this patent term adjustment calculation including the information required by 37 CFR 1.705(b)(2) and the fee required by 37 CFR 1.18(e), the USPTO will issue a certificate of correction reflecting the PTA determination noted above.

Patentee should be aware that in order to preserve the right to review in the United States District Court for the District of Columbia of the USPTO patent term adjustment determination, patentee must ensure that he or she also take the steps required under 35 U.S.C. 154(b)(4)(A) in a timely manner. Nothing in the request for recalculation should be construed as providing an alternative time frame for commencing a civil action under 35 U.S.C. 154(b)(4)(A).

Any questions concerning this decision should be directed to the Office of Patent Legal Administration at 571-272-7702.

UNITED STATES PATENT AND TRADEMARK OFFICE

Commissioner for Patents
United States Patent and Trademark Office
P.O. Box 1450
Alexandria, VA 22313-1450
www.uspto.gov

MEYERTONS HOOD KIVLIN
KOWERT & GOETZEL, P.C.
P.O. BOX 398
AUSTIN, TX 78767-0398

COPY MAILED

AUG 29 2007

OFFICE OF PETITIONS

In re Application of :
Keshav Narayanan et al :
Application No. 11/415,394 : DECISION REFUSING STATUS
Filed: May 1, 2006 : UNDER 37 CFR 1.47(a)
Attorney Docket No. 5460-01301 :

This is in response to the petition under 37 CFR 1.47(a), filed December 13, 2006.

The petition is dismissed.

Rule 47 applicant is given TWO MONTHS from the mailing date of this decision to reply, correcting the below-noted deficiencies. Any reply should be entitled "Request for Reconsideration of Petition Under 37 CFR 1.47(a)," and should only address the deficiencies noted below, except that the reply may include an oath or declaration executed by the non-signing inventor. **FAILURE TO RESPOND WILL RESULT IN ABANDONMENT OF THE APPLICATION.** Any extensions of time will be governed by 37 CFR 1.136(a).

A grantable petition under 37 CFR 1.47(a) requires: (1) proof that the non-signing inventor cannot be reached or refuses to sign the oath or declaration after having been presented with the application papers (specification, claims and drawings); (2) an acceptable oath or declaration in compliance with 35 U.S.C. §§ 115 and 116; (3) the petition fee; and (4) a statement of the last known address of the non-signing inventor. Applicant lacks item (1) set forth above.

As to item (1), rule 47 applicant must demonstrate with documented evidence that an inventor refuses to join in the application after having been presented with the application papers (specification, claims, drawings and oath or declaration). There is no indication in the present case whether joint inventor Keshav Narayanan was ever presented with a copy of the complete application papers for the instant nonprovisional application. The fact that an application may contain proprietary information does not relieve the 37 CFR 1.47 applicant of the responsibility to present the application papers to the inventor if the inventor is willing to receive the papers. If joint inventor Narayanan was not presented with a copy of the application papers for the instant nonprovisional application, then Mr. Narayanan could not attest that he has "reviewed and understands the application papers" and could not execute the declaration he was requested to

sign. While the statement of facts states "In a telephone conversation in the summer of 2006, Mr. Narayanan expressed to me that he was not willing to sign the declaration of the above-named application unless Landmark Graphics Corporation reimbursed him for other unrelated expenses that he incurred while still employed with Landmark Graphics Corporation," it is unclear whether Mr. Narayanan was presented with a copy of the complete application papers. Did inventor Narayanan receive a copy of the application papers? Before a refusal can be alleged, it must be demonstrated that a *bona fide* attempt was made to present a copy of the application papers to the nonsigning inventor for signature. Unless petitioner can show that a copy of the application papers was presented to inventor Narayanan or that the inventor refused to accept delivery of the papers or expressly stated that the application papers should not be sent, then petitioner will have to mail a copy of the complete application papers (specification, claims and drawings) to inventor Narayanan's last known address, return receipt requested. A cover letter of instructions should accompany the mailing of the application papers setting a deadline or a statement that no response will constitute a refusal. This sort of ultimatum lends support to a finding of refusal by conduct. **The proof of the pertinent events should be made by a statement of someone with firsthand knowledge of the events and should include documentary evidence, such as certified mail return receipt, cover letter of instructions, telegram, etc.** See MPEP 409.03(d).

The statements of facts must be signed, where at all possible, by a person having firsthand knowledge of the facts recited therein. If the inventor orally refuses to join in the application, that fact along with the time and place of the refusal must be stated in the affidavit or declaration. If, on the other hand, petitioner receives an express written refusal, a copy of the document evidencing that refusal must be made part of the affidavit or declaration.

When it is concluded by the rule 47 petitioner that an omitted inventor's conduct constitutes a refusal, all facts upon which that conclusion is based should be stated in an affidavit or declaration. If there is documentary evidence to support facts alleged in the affidavit or declaration, such evidence must be submitted.

Whenever an omitted inventor gives a reason for refusing to sign the application oath or declaration, that reason should be stated in the affidavit or declaration.

Further correspondence with respect to this matter should be addressed as follows:

By mail:
Mail Stop PETITION
Commissioner for Patents
Post Office Box 1450
Alexandria, VA 22313-1450

By hand:
Customer Service Window
Randolph Building
401 Dulany Street
Alexandria, VA 22314

By facsimile: (571) 273-8300
ATTN: Office of Petitions

Telephone inquiries concerning this decision should be directed to Irvin Dingle at (571) 272-3210.

Frances Hicks
Petitions Examiner
Office of Petitions

UNITED STATES PATENT AND TRADEMARK OFFICE

Commissioner for Patents
United States Patent and Trademark Office
P. O. Box 1450
Alexandria, VA 22313-1450
www. uspto. gov

MEYERTONS HOOD KIVLIN KOWERT & GOETZEL, P.C.
P.O. BOX 398
AUSTIN, TX 78767-0398

COPY MAILED

JAN 28 2008

OFFICE OF PETITIONS

In re Application of	:	
Keshav Narayanan et al	:	
Application No. 11/415,394	:	ON PETITION
Filed: May 1, 2006	:	
Attorney Docket No. 5460-01301	:	

This is a decision on the petition under 37 CFR 1.137(b), filed December 13, 2006, to revive the above-identified application.

The petition is **GRANTED**.

The above-identified application became abandoned for failure to reply in a timely manner to the Notice of Missing Requirements (Notice) mailed May 24, 2006. The Notice set a period for reply of two (2) months from the mail date of the Notice. No extension of time under the provisions of 37 CFR 1.136(a) were obtained. Accordingly, the above-identified application became abandoned on July 25, 2006.

Telephone inquiries concerning this decision should be directed to Irvin Dingle at (571) 272-3210.

This matter is being referred to the Initial Patent Examination Unit.

Irvin Dingle
Petitions Examiner
Office of Petitions

UNITED STATES PATENT AND TRADEMARK OFFICE

Commissioner for Patents
United States Patent and Trademark Office
P.O. Box 1450
Alexandria, VA 22313-1450
www.uspto.gov

COPY MAILED

FEB 23 2007

OFFICE OF PETITIONS

WOODARD, EMHARDT, MORIARTY, MCNETT & HENRY LLP
111 MONUMENT CIRCLE, SUITE 3700
INDIANAPOLIS IN 46204-5137

In re Application of :
F. Joseph Obermiller et al. :
Application No. 11/415,403 : DECISION ACCORDING STATUS
Filed: May 1, 2006 : UNDER 37 CFR 1.47(a)
Attorney Docket No. 3006-1850 :

This is in response to the petition filed January 8, 2007 under 37 CFR 1.47(a).

The petition under 37 CFR 1.47(a) is **GRANTED**.

The above-identified application was filed on May 1, 2006, with an unsigned oath or declaration. Accordingly, on June 2, 2006, a "Notice To File Missing Parts of Application" was mailed, requiring *inter alia* a properly executed oath or declaration.

In response, the instant petition under 37 CFR 1.47(a) filed with a certificate of mail dated January 3, 2007, an oath or declaration executed by all joint inventors except Clay D. Fette, and a request for a five month extension of time were filed. The petition argues that joint inventor Fette refuses to cooperate with the filing of the instant application.

A grantable petition under 37 CFR 1.47(a) requires: (1) proof that the non-signing inventor cannot be reached or refuses to sign the oath or declaration after having been presented with the application papers (specification, claims and drawings); (2) an acceptable oath or declaration in compliance with 35 U.S.C. §§ 115 and 116; (3) the petition fee; and (4) a statement of the last known address of the non-signing inventor.

The petition bears proof that the application papers were forwarded to and received by Mr. Fette and that to date, he has not returned an executed copy of the oath or declaration.

The above-identified application and papers have been reviewed and found in compliance with 37 CFR 1.47(a). In view thereof, this application is hereby accorded Rule 1.47(a) status.

Thus, as provided in Rule 1.47c, this Office will forward notice of this application's filing to the non-signing inventor at the address given in the petition. Notice of the filing of this application will also be published in the Official Gazette.

This matter is being referred to the Office of Initial Patent Examination for further pre-examination processing.

Telephone inquiries concerning this matter may be directed to the undersigned Petitions Attorney at (571) 272-3212.

Patricia Faison-Ball
Senior Petitions Attorney
Office of Petitions

UNITED STATES PATENT AND TRADEMARK OFFICE

UNITED STATES DEPARTMENT OF COMMERCE
United States Patent and Trademark Office
Address: COMMISSIONER FOR PATENTS
P.O. Box 1450
Alexandria, Virginia 22313-1450
www.uspto.gov

MBHB/TRADING TECHNOLOGIES
300 SOUTH WACKER DRIVE
SUITE 3200
CHICAGO, IL 60606

Mail Date: 04/20/2010

Applicant	: Brian J. Buck	: DECISION ON REQUEST FOR
Patent Number	: 7613651	: RECALCULATION of PATENT
Issue Date	: 11/03/2009	: TERM ADJUSTMENT IN VIEW
Appliction No	: 11/415,407	: OF WYETH AND NOTICE OF INTENT TO
Filed	: 05/01/2006	: ISSUE CERTIFICATE OF CORRECTION
		:

The Request for Recalculation is **GRANTED** to the extent indicated.

The patent term adjustment has been determined to be **395** days. The USPTO will *sua sponte* issue a certificate of correction reflecting the amount of PTA days determined by the recalculation.

Prior to the issuance of the certificate of correction, the USPTO will afford patentee an opportunity to be heard and request reconsideration. Accordingly, patentee has **one month or thirty (30) days**, whichever is longer, to file a request for reconsideration of this patent term adjustment calculation. See 35 U.S.C. 154(b)(3)(B)(ii) and 37 CFR 1.322(a)(4). No extensions of time will be granted under 37 CFR 1.136.

Patentee should use document code PET.OP if electronically filing a request for reconsideration of this patent term adjustment calculation. The patentee must also include the information required by 37 CFR 1.705(b)(2) and the fee required by 37 CFR 1.18(e). If patentee does not file a timely request for reconsideration of this patent term adjustment calculation including the information required by 37 CFR 1.705(b)(2) and the fee required by 37 CFR 1.18(e), the USPTO will issue a certificate of correction reflecting the PTA determination noted above.

Patentee should be aware that in order to preserve the right to review in the United States District Court for the District of Columbia of the USPTO patent term adjustment determination, patentee must ensure that he or she also take the steps required under 35 U.S.C. 154(b)(4)(A) in a timely manner. Nothing in the request for recalculation should be construed as providing an alternative time frame for commencing a civil action under 35 U.S.C. 154(b)(4)(A).

Any questions concerning this decision should be directed to the Office of Patent Legal Administration at 571-272-7702.

UNITED STATES PATENT AND TRADEMARK OFFICE

Commissioner for Patents
United States Patent and Trademark Office
P.O. Box 1450
Alexandria, VA 22313-1450
www.uspto.gov

13 SEP 2006

Maria M. Eliseeva
Houston Eliseeva LLP
4 Militia Drive, Suite 4
Lexington, MA 02421

In re Application of :
ULRICH et al. :
U.S. Application No.: 11/415,412 : DECISION ON PETITION
Filing Date: May 1, 2006 : UNDER 37 CFR 1.137(b)
Attorney Docket No.: 21295.0127US1 (E0736US) :
For: OBJECTIVE FOR EVANESCENT :
ILLUMINATION AND MICROSCOPE :

This decision is issued in response to applicant's "Petition to Revive under 37 CFR 1.37(b)" filed 01 May 2006 in the United States Patent and Trademark Office (USPTO).

BACKGROUND

On 23 September 2004, applicant filed international application PCT/EP04/52287 which claimed a priority date of 25 September 2003. Pursuant to 37 CFR 1.495, the deadline for payment of the basic national fee in the United States was to expire 30 months from the priority date, 25 March 2006.

On 01 May 2006, applicant filed the present petition to revive pursuant to 37 CFR 1.137(b) accompanied by a continuation application.

DISCUSSION

A petition under 37 CFR 1.137(b) requesting that the application be revived on the grounds of unintentional abandonment must be accompanied by (1) the required reply, (2) the petition fee required by law, (3) a statement that the "entire delay in filing the required reply from the due date for the reply until the filing of a grantable petition pursuant to this paragraph was unintentional" and (4) any terminal disclaimer and fee pursuant to 37 CFR 1.137(c) (where required).

Regarding item (1), applicant has supplied the proper reply in the form of the filing of a continuation application.

As to item (2), applicant has submitted the requisite petition fee and thus satisfying item (2).

Regarding item (3), applicant's statement that "entire delay in filing the required reply from the due date for the reply until the filing of a grantable petition pursuant to this paragraph was unintentional" satisfies this element.

As to Item (4), the terminal disclaimer is not required since this application was filed after 08 June 1995.

CONCLUSION

Applicant's petition to revive for the purposes of continuity only is **GRANTED**.

International application PCT/EP04/52287 is being revived for purposes of continuity only and since continuity has been established by this decision reviving the international application, the international application is again abandoned.

The application will be forwarded to Office of Initial Patent Examination for continued processing as an application under 35 U.S.C. 111(a).

Anthony Smith
Attorney-Advisor
Office of PCT Legal Administration
Tel: (571) 272-3298
Fax: (571) 273-0459

OIPE IAP15
MAY 01 2006
PATENT & TRADEMARK OFFICE

AP20 Rec'd PCT/PTO 01 MAY 2006

PTO/SB/17 (01-06)
Approved for use through 07/31/2006. OMB 0651-0032
U.S. Patent and Trademark Office; U.S. DEPARTMENT OF COMMERCE
Under the Paperwork Reduction Act of 1995 no persons are required to respond to a collection of information unless it displays a valid OMB control number.

Fees pursuant to the Consolidated Appropriations Act, 2005 (H.R. 4818).

FEE TRANSMITTAL
For FY 2006

☐ Applicant claims small entity status. See 37 CFR 1.27

TOTAL AMOUNT OF PAYMENT	($)	1500.00

Complete if Known	
Application Number	Not Yet Assigned
Filing Date	Not Yet Assigned
First Named Inventor	Heinrich Ulrich et al.
Examiner Name	Not Yet Assigned
Art Unit	Not Yet Assigned
Attorney Docket No.	21295.0127US1 (E0736US)

METHOD OF PAYMENT (check all that apply)

☐ Check ☐ Credit Card ☐ Money Order ☐ None ☐ Other (please identify): _____

☑ Deposit Account Deposit Account Number: 502233 Deposit Account Name: Houston Eliseeva LLP

For the above-identified deposit account, the Director is hereby authorized to: (check all that apply)

☑ Charge fee(s) indicated below ☐ Charge fee(s) indicated below, **except for the filing fee**

☑ Charge any additional fee(s) or underpayments of fee(s) under 37 CFR 1.16 and 1.17 ☑ Credit any overpayments

WARNING: Information on this form may become public. Credit card information should not be included on this form. Provide credit card information and authorization on PTO-2038.

FEE CALCULATION (All the fees below are due upon filing or may be subject to a surcharge.)

1. BASIC FILING, SEARCH, AND EXAMINATION FEES

	FILING FEES		SEARCH FEES		EXAMINATION FEES		
		Small Entity		Small Entity		Small Entity	
Application Type	Fee ($)	Fee ($)	Fee ($)	Fee ($)	Fee ($)	Fee ($)	Fees Paid ($)
Utility	300	150	500	250	200	100	
Design	200	100	100	50	130	65	
Plant	200	100	300	150	160	80	
Reissue	300	150	500	250	600	300	
Provisional	200	100	0	0	0	0	

2. EXCESS CLAIM FEES

Fee Description	Fee ($)	Small Entity Fee ($)
Each claim over 20 (including Reissues)	50	25
Each independent claim over 3 (including Reissues)	200	100
Multiple dependent claims	360	180

Total Claims	Extra Claims	Fee ($)	Fee Paid ($)
_____ - 20 or HP =	_____	x _____	= _____

HP = highest number of total claims paid for, if greater than 20.

Indep. Claims	Extra Claims	Fee ($)	Fee Paid ($)
_____ - 3 or HP =	_____	x _____	= _____

HP = highest number of independent claims paid for, if greater than 3.

Multiple Dependent Claims	
Fee ($)	Fee Paid ($)
_____	_____

3. APPLICATION SIZE FEE

If the specification and drawings exceed 100 sheets of paper (excluding electronically filed sequence or computer listings under 37 CFR 1.52(e)), the application size fee due is $250 ($125 for small entity) for each additional 50 sheets or fraction thereof. See 35 U.S.C. 41(a)(1)(G) and 37 CFR 1.16(s).

Total Sheets	Extra Sheets	Number of each additional 50 or fraction thereof	Fee ($)	Fee Paid ($)
_____ - 100 =	_____	/ 50 = _____ (round up to a whole number)	x _____	= _____

4. OTHER FEE(S)

	Fees Paid ($)
Non-English Specification, $130 fee (no small entity discount)	
Other (e.g., late filing surcharge): petition to revive fee	1500.00

Adjustment date: 09/13/2006 SHASHETI
05/05/2006 HKAYPAGH 00000146 502233
2287 1500.00
01 FC:1453

PCT/EP04/5

SUBMITTED BY			
Signature	Maria Eliseeva	Registration No. (Attorney/Agent) 43,328	Telephone 791-863-9991
Name (Print/Type)	Maria Eliseeva		Date May 1, 2006

This collection of information is required by 37 CFR 1.136. The information is required to obtain or retain a benefit by the public which is to file (and by the USPTO to process) an application. Confidentiality is governed by 35 U.S.C. 122 and 37 CFR 1.14. This collection is estimated to take 30 minutes to complete, including gathering, preparing, and submitting the completed application form to the USPTO. Time will vary depending upon the individual case. Any comments on the amount of time you require to complete this form and/or suggestions for reducing this burden, should be sent to the Chief Information Officer, U.S. Patent and Trademark Office, U.S. Department of Commerce, P.O. Box 1450, Alexandria, VA 22313-1450. DO NOT SEND FEES OR COMPLETED FORMS TO THIS ADDRESS. **SEND TO: Commissioner for Patents, P.O. Box 1450, Alexandria, VA 22313-1450.**

If you need assistance in completing the form, call 1-800-PTO-9199 and select option 2.

OIPE IAP15 MAY 0 1 2006 PATENT & TRADEMARK OFFICE

IAP20 Rec'd PCT/PTO 01 MAY 2006

PTO/SB/17 (01-06)
Approved for use through 07/31/2006. OMB 0651-0032
U.S. Patent and Trademark Office; U.S. DEPARTMENT OF COMMERCE

Under the Paperwork Reduction Act of 1995 no persons are required to respond to a collection of information unless it displays a valid OMB control number

Fees pursuant to the Consolidated Appropriations Act, 2005 (H.R. 4818).

FEE TRANSMITTAL
For FY 2006

☐ Applicant claims small entity status. See 37 CFR 1.27

TOTAL AMOUNT OF PAYMENT	($)	1500.00

Complete if Known	
Application Number	Not Yet Assigned
Filing Date	Not Yet Assigned
First Named Inventor	Heinrich Ulrich et al.
Examiner Name	Not Yet Assigned
Art Unit	Not Yet Assigned
Attorney Docket No.	21295.0127US1 (E0736US)

METHOD OF PAYMENT (check all that apply)

☐ Check ☐ Credit Card ☐ Money Order ☐ None ☐ Other (please identify): _____

☑ Deposit Account Deposit Account Number: 502233 Deposit Account Name: Houston Eliseeva LLP

For the above-identified deposit account, the Director is hereby authorized to: (check all that apply)

☑ Charge fee(s) indicated below ☐ Charge fee(s) indicated below, **except for the filing fee**

☑ Charge any additional fee(s) or underpayments of fee(s) under 37 CFR 1.16 and 1.17 ☑ Credit any overpayments

WARNING: Information on this form may become public. Credit card information should not be included on this form. Provide credit card information and authorization on PTO-2038.

FEE CALCULATION (All the fees below are due upon filing or may be subject to a surcharge.)

1. BASIC FILING, SEARCH, AND EXAMINATION FEES

	FILING FEES		SEARCH FEES		EXAMINATION FEES		
		Small Entity		Small Entity		Small Entity	
Application Type	Fee ($)	Fee ($)	Fee ($)	Fee ($)	Fee ($)	Fee ($)	Fees Paid ($)
Utility	300	150	500	250	200	100	
Design	200	100	100	50	130	65	
Plant	200	100	300	150	160	80	
Reissue	300	150	500	250	600	300	
Provisional	200	100	0	0	0	0	

2. EXCESS CLAIM FEES

Fee Description	Fee ($)	Small Entity Fee ($)
Each claim over 20 (including Reissues)	50	25
Each independent claim over 3 (including Reissues)	200	100
Multiple dependent claims	360	180

Total Claims	Extra Claims	Fee ($)	Fee Paid ($)
_____ - 20 or HP =	_____	x _____	= _____

HP = highest number of total claims paid for, if greater than 20.

Indep. Claims	Extra Claims	Fee ($)	Fee Paid ($)
_____ - 3 or HP =	_____	x _____	= _____

HP = highest number of independent claims paid for, if greater than 3.

Multiple Dependent Claims	
Fee ($)	Fee Paid ($)
_____	_____

3. APPLICATION SIZE FEE

If the specification and drawings exceed 100 sheets of paper (excluding electronically filed sequence or computer listings under 37 CFR 1.52(e)), the application size fee due is $250 ($125 for small entity) for each additional 50 sheets or fraction thereof. See 35 U.S.C. 41(a)(1)(G) and 37 CFR 1.16(s).

Total Sheets	Extra Sheets	Number of each additional 50 or fraction thereof	Fee ($)	Fee Paid ($)
_____ - 100 =	_____ / 50 =	_____ (round up to a whole number)	x _____	= _____

4. OTHER FEE(S)

	Fees Paid ($)
Non-English Specification, $130 fee (no small entity discount)	
Other (e.g., late filing surcharge): petition to revive fee	1500.00

SUBMITTED BY

Signature	Maria Eliseeva	Registration No. (Attorney/Agent) 43,328	Telephone 791-863-9991
Name (Print/Type)	Maria Eliseeva		Date May 1, 2006

This collection of information is required by 37 CFR 1.136. The information is required to obtain or retain a benefit by the public which is to file (and by the USPTO to process) an application. Confidentiality is governed by 35 U.S.C. 122 and 37 CFR 1.14. This collection is estimated to take 30 minutes to complete, including gathering, preparing, and submitting the completed application form to the USPTO. Time will vary depending upon the individual case. Any comments on the amount of time you require to complete this form and/or suggestions for reducing this burden, should be sent to the Chief Information Officer, U.S. Patent and Trademark Office, U.S. Department of Commerce, P.O. Box 1450, Alexandria, VA 22313-1450. DO NOT SEND FEES OR COMPLETED FORMS TO THIS ADDRESS. **SEND TO: Commissioner for Patents, P.O. Box 1450, Alexandria, VA 22313-1450.**

If you need assistance in completing the form, call 1-800-PTO-9199 and select option 2.

05-02-06

~~DAC~~

OIPE IAP15 MAY 01 2006 PATENT & TRADEMARK OFFICE

IAP7 Rec'd PCT/PTO 01 MAY 2006

$ PCT

PTO/SB/64 (09-04)
Approved for use through 07/31/2006. OMB 0651-0031
U.S. Patent and Trademark Office; U.S. DEPARTMENT OF COMMERCE
Under the Paperwork Reduction Act of 1995, no persons are required to respond to a collection of information unless it displays a valid OMB control number.

PETITION FOR REVIVAL OF AN APPLICATION FOR PATENT ABANDONED UNINTENTIONALLY UNDER 37 CFR 1.137(b)

Docket Number (Optional)
21295.0127US1 (E0736US)

First named inventor: HEINRICH ULRICH, et al.

Application No.: Not Yet Assigned

Art Unit: Not Yet Assigned

Filed: Herewith

Examiner: Not Yet Assigned

Title: OBJECTIVE FOR EVANESCENT ILLUMINATION AND MICROSCOPE

05/05/2006 BKAYPAGH 00000146 502233 PCT/EP04/52287

01 FC:1453 1500.00 DA

RECEIVED
16 MAY 2006
Legal Staff
International Division

Attention: Office of Petitions
Mail Stop Petition
Commissioner for Patents
P.O. Box 1450
Alexandria, VA 22313-1450
FAX (703) 872-9306

NOTE: If information or assistance is needed in completing this form, please contact Petitions Information at (703) 305-9282.

The above-identified application became abandoned for failure to file a timely and proper reply to a notice or action by the United States Patent and Trademark Office. The date of abandonment is the day after the expiration date of the period set for reply in the office notice or action plus an extensions of time actually obtained.

APPLICANT HEREBY PETITIONS FOR REVIVAL OF THIS APPLICATION

NOTE: A grantable petition requires the following items:
(1) Petition fee;
(2) Reply and/or issue fee;
(3) Terminal disclaimer with disclaimer fee - required for all utility and plant applications filed before June 8, 1995; and for all design applications; and
(4) Statement that the entire delay was unintentional.

1. Petition fee

☐ Small entity-fee $ _____ (37 CFR 1.17(m)). Applicant claims small entity status. See 37 CFR 1.27.

☑ Other than small entity – fee $ 1,500.00 (37 CFR 1.17(m))

2. Reply and/or fee

A. The reply and/or fee to the above-noted Office action in the form of Continuation Application of PCT/EP2004/052287 (identify type of reply):

☐ has been filed previously on _____.
☑ is enclosed herewith.

09/13/2006 SBASHEIR 00000003 502233 11415412
01 FC:1453 1500.00 DA

B. The issue fee and publication fee (if applicable) of $ _____.
☐ has been paid previously on _____.
☐ is enclosed herewith.

This collection of information is required by 37 CFR 1.137(b). The information is required to obtain or retain a benefit by the public which is to file (and by the USPTO to process) an application. Confidentiality is governed by 35 U.S.C. 122 and 37 CFR 1.11 and 1.14. This collection is estimated to take 1.0 hour to complete, including gathering, preparing, and submitting the completed application form to the USPTO. Time will vary depending upon the individual case. Any comments on the amount of time you require to complete this form and/or suggestions for reducing this burden, should be sent to the Chief Information Officer, U.S. Patent and Trademark Office, U.S. Department of Commerce, P.O. Box 1450, Alexandria, VA 22313-1450. DO NOT SEND FEES OR COMPLETED FORMS TO THIS ADDRESS. **SEND TO: Mail Stop Petition, Commissioner for Patents, P.O. Box 1450, Alexandria, VA 22313-1450.**

If you need assistance in completing the form, call 1-800-PTO-9199 and select option 2.

3. Terminal disclaimer with disclaimer fee

☐ Since this utility/plant application was filed on or after June 8, 1995, no terminal disclaimer is required.

☐ A terminal disclaimer (and disclaimer fee (37 CFR 1.20(d)) of $ _____ for a small entity or $ _____ for other than a small entity) disclaiming the required period of time is enclosed herewith (see PTO/SB/63).

4. STATEMENT: The entire delay in filing the required reply from the due date for the required reply until the filing of a grantable petition under 37 CFR 1.137(b) was unintentional. [NOTE: The United States Patent and Trademark Office may require additional information if there is a question as to whether either the abandonment or the delay in filing a petition under 37 CFR 1.137(b) was unintentional (MPEP 711.03(c), subsections (III)(C) and (D)).]

WARNING: Information on this form may become public. Credit card information should not be included on this form. Provide credit card information and authorization on PTO-2038.

Maria Eliseeva — Signature

May 1, 2006 — Date

Maria M. Eliseeva — Typed or printed name

43,328 — Registration Number, if applicable

Houston Eliseeva LLP — Address

781-863-9991 — Telephone Number

4 Militia Drive, Ste. 4, Lexington, MA 02421 — Address

Enclosures:
☑ Fee Payment
☐ Reply
☐ Terminal Disclaimer Form
☐ Additional sheets containing statements establishing unintentional delay
☑ Other: Continuation Application

CERTIFICATE OF MAILING OR TRANSMISSION [37 CFR 1.8(a)]

I hereby certify that this correspondence is being: sent by Express Mail Service along with the application on the date shown below

☑ Deposited with the United States Postal Service on the date shown below with sufficient postage as first class mail in an envelope addressed to: Mail Stop Petition, Commissioner for Patents, P. O. Box 1450, Alexandria, VA 22313-1450.

☐ Transmitted by facsimile on the date shown below to the United States Patent and Trademark Office as (703) 872-9306.

May 1, 2006 — Date

Inna Golovach — Signature

Express Mail Service Label No: EV 318945239 US

Inna Golovach — Typed or printed name of person signing certificate

UNITED STATES PATENT AND TRADEMARK OFFICE

Commissioner for Patents
United States Patent and Trademark Office
P.O. Box 1450
Alexandria, VA 22313-1450
www.uspto.gov

HOUSTON ELISEEVA
4 MILITIA DRIVE, SUITE 4
LEXINGTON MA 02421

COPY MAILED

JAN 24 2008

OFFICE OF PETITIONS

In re Application of Heinrich ULRICH et al. :
Application No. 11/415,412 :
Filed: May 1, 2006 : ON PETITION
Attorney Docket No. :
2195.0127US1(E0736US) :

This is a decision on the petition under the unintentional provisions of 37 CFR 1.137(b), filed November 17, 2007, to revive the above-identified application.

The petition is **GRANTED**.

The application became abandoned for failure to timely file a reply within the meaning of 37 CFR 1.113 to the final Office action of April 30, 2007. The proposed reply required for consideration of a petition to revive must be a Notice of Appeal (and appeal fee required by 37 CFR 41.20(b)(2), an amendment that *prima facie* places the application in condition for allowance, a Request for Continued Examination and submission (37 CFR 1.114), or the filing of a continuing application under 37 CFR 1.53(b). See MPEP 711.03(c)(III)(A)(2). A one-month extension of time pursuant to the provisions of 37 CFR 1.136(a) was obtained. Accordingly, the date of abandonment of this application is August 31, 2007.

The petition satisfies the requirements of 37 CFR 1.137(b) in that petitioner has supplied (1) the reply in the form of a Request for Continued Examination (RCE) and fee of $810, and the submission required by 37 CFR 1.114; (2) the petition fee of $1540; and (3) a proper statement of unintentional delay.

Telephone inquiries concerning this decision should be directed to the undersigned at (571) 272-3687.

This application is being referred to Technology Center AU 2872 for processing of the RCE and for appropriate action by the Examiner in the normal course of business on the amendment submitted in accordance with 37 CFR 1.114.

Anthony Knight
Supervisor
Office of Petitions

UNITED STATES PATENT AND TRADEMARK OFFICE

Commissioner for Patents
United States Patent and Trademark Office
P.O. Box 1450
Alexandria, VA 22313-1450
www.uspto.gov

15 SEP 2006

09/15/2006 SBASHEIR 00000004 502233 11415413
01 FC:1453 1500.00 DA

HOUSTON ELISEEVA
4 MILITIA DRIVE, SUITE 4
LEXINGTON MA 02421

In re Application of
HECKER et al.
Application No.: 11/415,413
PCT No.: PCT/EP04/052285
Filing Date: 01 May 2006
Attorney Docket No.: 21295.0131US1
For: MICROSCOPE WITH EVANESCENT SAMPLE ILLUMINATION

DECISION ON

PETITION

UNDER 37 CFR 1.137(b)

This application is before the PCT Legal Office for consideration of applicant's petition to revive under 37 CFR 1.137(b) filed on 01 May 2006.

BACKGROUND

On 23 September 2004, applicant filed international application PCT/EP04/52285, which claimed priority of an earlier German application filed 25 September 2003. The deadline for entry into national stage expired thirty months after the priority date or by midnight on 27 March 2006 (25 March 2006 was a Saturday and 26 March 2006 was a Sunday). Thereafter, the application went abandoned for failure to enter national stage in the U.S. before the expiration of the thirty month period.

On 01 May 2006, applicant filed transmittal letter requesting that the international application be treated as a continuation application. The transmittal letter indicated that the filing was a "Request for Filing a Continuation or Division of An International Application" under 37 CFR 1.53(b). An Application Data Sheet accompanied the transmittal letter with the required reference to the international application and international filing date. Applicants also filed the instant petition to revive. The application was assigned serial no. 11/415,413.

DISCUSSION

International application PCT/EP04/52285 became abandoned as to the United States of America after midnight on 27 March 2006 for failure to pay the basic national fee.

The transmittal letter filed on 01 May 2006 did not identify the application as a national stage application being filed under 35 U.S.C. 371 but requested filing under 37 CFR 1.53(b) as a continuation application of international application PCT/EP04/52285. The application is considered filed under 35 U.S.C. 111(a). Accordingly, the original papers deposited on 01 May 2006 are properly accepted as a filing under 35 U.S.C. 111(a).

On 01 May 2006, applicant also filed a petition under 37 CFR 1.137(b) to revive international application PCT/EP04/52285 as to the United States abandoned under 35 U.S.C. 371(d). The filing of the present continuing application under 35 U.S.C. 111(a) is accepted as the

appropriate response under 37 CFR 1.137(b). See MPEP § 711.03(c).

All of the requirements of 37 CFR 1.137(b) for revival have been submitted. Applicants' statement that "the entire delay in filing the required reply from the due date for the required reply until the filing of a grantable petition under 37 CFR 1.137(b) was unintentional" meets the requirements of 37 CFR 1.137(b)(3).

International application PCT/EP04/52285 is being revived for purposes of continuity only and since continuity has been established by this decision reviving the international application, the international application is again abandoned in favor of the present continuing application 11/415,413.

The specification and claims filed on 01 May 2006 complete the requirements for a filing date under 35 U.S.C. 111(a). Accordingly, these applications will be accorded a filing date of 01 May 2006.

CONCLUSION

Applicant's petition to revive under 37 CFR 1.137(b) is **GRANTED**.

This application is being forwarded to Office of Initial Patent Examination for further processing as an application filed under 35 U.S.C. 111(a), having a filing date of 01 May 2006. The application will then be examined in due course.

Cynthia M. Kratz
Attorney Advisor
PCT Legal Office
Office of PCT Legal Administration

Telephone: (571)272-3286

UNITED STATES PATENT AND TRADEMARK OFFICE

Commissioner for Patents
United States Patent and Trademark Office
P.O. Box 1450
Alexandria, VA 22313-1450
www.uspto.gov

SHLESINGER, ARKWRIGHT & GARVEY LLP
1420 KING STREET
SUITE 600
ALEXANDRIA VA 22314

COPY MAILED

OCT 31 2006

OFFICE OF PETITIONS

In re Application of :
J. Frank Kroenig, et al. :
Application No. 11/415,420 : DECISION ON PETITION
Filed: May 2, 2006 : TO MAKE SPECIAL UNDER
Attorney Docket No. 7233-1 : 37 CFR 1.102(c)(1)
:

This is a decision on the petition under 37 CFR 1.102(c)(1), filed September 20, 2006, to make the above-identified application special based on applicant's age as set forth in M.P.E.P. § 708.02, Section IV.

The petition is **GRANTED**.

A grantable petition to make an application special under 37 CFR 1.102(c)(1) and MPEP § 708.02, Section IV: Applicant's Age, must be accompanied by evidence showing that at least one of the applicants is 65 years of age, or more, such as a birth certificate or a statement by applicant. No fee is required.

The instant petition includes copy of applicant' drivers license. Accordingly, the above-identified application has been accorded "special" status.

Telephone inquiries concerning this decision should be directed to April Wise at 571-272-1642.

All other inquiries concerning either the examination or status of the application should be directed to the Technology Center.

The application is being forwarded to the Technology Center Art Unit 3735 for action on the merits commensurate with this decision.

April M. Wise
Petitions Examiner
Office of Petitions