UNITED STATES PATENT AND TRADEMARK OFFICE

Commissioner for Patents
United States Patent and Trademark Office
P.O. Box 1450
Alexandria, VA 22313-1450
www.uspto.gov

SMITH, GAMBRELL & RUSSELL, LLP
SUITE 800
1850 M STREET, N.W.
WASHINGTON, DC 20036

COPY MAILED

FEB 2 5 2009

OFFICE OF PETITIONS

In re Application of	:	
Bruce Ingrid	:	
Application No. 11/415,431	:	DECISION ON PETITION
Filed: May 2, 2006	:	UNDER 37 CFR 1.55(c)
Attorney Docket No. 034142R006CIP	:	

This is a decision on the petition under 37 CFR 1.55(c), filed September 25, 2008, to accept an unintentionally delayed claim under 35 U.S.C. § 119(a)-(d) for the benefit of priority to foreign Sweden Application No. 9901523-2, filed 28 April 1999.

The petition is **GRANTED**.

This pending nonprovisional application was filed after November 29, 2000, and did not include a reference to the foreign application in accordance with 37 CFR 1.76(b)(6). Since the claim for priority is being submitted after the period specified in 37 CFR 1.55(a)(1)(i), this is an appropriate petition under the provisions of 37 CFR 1.55(c). The petition fee of $1,410 is being charged to counsel's deposit account as authorized.

A petition under 37 CFR 1.55(c) to accept an unintentionally delayed claim for priority requires:

(1) The nonprovisional application claiming the benefit of an earlier filing date must be filed on or after November 29, 2000;

(2) the claim submitted with the petition must identify the prior foreign application for which priority is claimed, as well as any foreign application for the same subject matter and having a filing date before that of the application for which priority is claimed, by the application number, country, and the filing date and be included either in an oath or declaration (37 CFR 1.63(c)(2)) or in an Application Data Sheet (37 CFR 1.76(b)(6);

(3) the surcharge as set forth in 37 CFR 1.17(t);

(4) a statement that the entire delay between the date the claim was due under 37 CFR 1.55(a)(1) and the date the claim was filed was unintentional (the Director may require additional information where there is a question whether the delay was unintentional); and

(5) the above-identified nonprovisional application must be filed within 12 months of the filing date of the foreign application.

This application was filed on May 2, 2006, which is after November 29, 2000 and intermediate Application No. PCT/SE00/00802 was filed within 12 months of April 28, 1999 (the filing date of the foreign application to which benefit is now being claimed). On September 4, 2008, an executed Application Data Sheet (ADS) was received which identifies the foreign application for which priority is claimed by application number, country and filing date. The required petition fee of $1,410 was received with the petition. Lastly, petitioner has provided an adequate statement of unintentional delay.

All of the above requirements having been satisfied, the late claim for priority under 35 U.S.C. § 119(a)-(d) is accepted as being unintentionally delayed.

The granting of the petition to accept the delayed benefit claim to the prior-filed application under 37 CFR 1.55(c) should not be construed as meaning that this application is entitled to the benefit of the prior-filed application. In order for this application to be entitled to the benefit of the prior-filed application, all other requirements under 35 U.S.C. § 119(a)-(d) and 37 CFR 1.55(a)(1) must be met. Similarly, the fact that the corrected Filing Receipt accompanying this decision on petition includes the prior-filed application should not be construed as meaning that applicant is entitled to the claim for benefit of priority to the prior-filed application noted thereon. Accordingly, the examiner will, in due course, consider this benefit claim and determine whether this application is entitled to the benefit of the earlier filing date.

The file does not indicate a change of address has been submitted, although the address given on the petition differs from the address of record. If appropriate, a change of address should be filed in accordance with MPEP 601.03. A courtesy copy of this decision is being mailed to the address given on the petition; however, the Office will mail all future correspondence solely to the address of record.

A corrected Filing Receipt, which includes the priority claim to the prior-filed foreign application, accompanies this decision on petition.

This application is being referred to Technology Center AU 1794 for consideration by the examiner of record of the foreign priority claim under 35 U.S.C. § 119(a)-(d).

Any inquiries directly pertaining to this matter may be directed to the undersigned at (571) 272-3204.

Sherry D. Brinkley
Petitions Examiner
Office of Petitions

ATTACHMENT: Corrected Filing Receipt

UNITED STATES PATENT AND TRADEMARK OFFICE

UNITED STATES DEPARTMENT OF COMMERCE
United States Patent and Trademark Office
Address: COMMISSIONER FOR PATENTS
P.O. Box 1450
Alexandria, Virginia 22313-1450
www.uspto.gov

APPLICATION NUMBER	FILING or 371(c) DATE	GRP ART UNIT	FIL FEE REC'D	ATTY.DOCKET.NO	TOT CLAIMS	IND CLAIMS
11/415,431	05/02/2006	1794	4490	034142R006CIP	60	7

CONFIRMATION NO. 2677

CORRECTED FILING RECEIPT

SMITH, GAMBRELL & RUSSELL, LLP
Suite 800
1850 M Street, N.W.
Washington, DC 20036

OC000000034622974

Date Mailed: 02/19/2009

Receipt is acknowledged of this non-provisional patent application. The application will be taken up for examination in due course. Applicant will be notified as to the results of the examination. Any correspondence concerning the application must include the following identification information: the U.S. APPLICATION NUMBER, FILING DATE, NAME OF APPLICANT, and TITLE OF INVENTION. Fees transmitted by check or draft are subject to collection. Please verify the accuracy of the data presented on this receipt. **If an error is noted on this Filing Receipt, please submit a written request for a Filing Receipt Correction. Please provide a copy of this Filing Receipt with the changes noted thereon. If you received a "Notice to File Missing Parts" for this application, please submit any corrections to this Filing Receipt with your reply to the Notice. When the USPTO processes the reply to the Notice, the USPTO will generate another Filing Receipt incorporating the requested corrections**

Applicant(s)

Ingrid Bruce, Viken, SWEDEN;
Lars Bruce, Viken, SWEDEN;
Adam Bruce, Viken, SWEDEN;

Power of Attorney: The patent practitioners associated with Customer Number 00441

Domestic Priority data as claimed by applicant

This application is a CIP of 09/959,439 12/03/2001 PAT 7,056,577
which is a 371 of PCT/SE00/00802 04/28/2000

Foreign Applications

SWEDEN 9901523-2 04/28/1999

If Required, Foreign Filing License Granted: 07/12/2006

The country code and number of your priority application, to be used for filing abroad under the Paris Convention, is **US 11/415,431**

Projected Publication Date: Not Applicable

Non-Publication Request: No

Early Publication Request: No

Title

Grain for providing cell growth

Preliminary Class

428

PROTECTING YOUR INVENTION OUTSIDE THE UNITED STATES

Since the rights granted by a U.S. patent extend only throughout the territory of the United States and have no effect in a foreign country, an inventor who wishes patent protection in another country must apply for a patent in a specific country or in regional patent offices. Applicants may wish to consider the filing of an international application under the Patent Cooperation Treaty (PCT). An international (PCT) application generally has the same effect as a regular national patent application in each PCT-member country. The PCT process **simplifies** the filing of patent applications on the same invention in member countries, but **does not result** in a grant of "an international patent" and does not eliminate the need of applicants to file additional documents and fees in countries where patent protection is desired.

Almost every country has its own patent law, and a person desiring a patent in a particular country must make an application for patent in that country in accordance with its particular laws. Since the laws of many countries differ in various respects from the patent law of the United States, applicants are advised to seek guidance from specific foreign countries to ensure that patent rights are not lost prematurely.

Applicants also are advised that in the case of inventions made in the United States, the Director of the USPTO must issue a license before applicants can apply for a patent in a foreign country. The filing of a U.S. patent application serves as a request for a foreign filing license. The application's filing receipt contains further information and guidance as to the status of applicant's license for foreign filing.

Applicants may wish to consult the USPTO booklet, "General Information Concerning Patents" (specifically, the section entitled "Treaties and Foreign Patents") for more information on timeframes and deadlines for filing foreign patent applications. The guide is available either by contacting the USPTO Contact Center at 800-786-9199, or it can be viewed on the USPTO website at http://www.uspto.gov/web/offices/pac/doc/general/index.html.

For information on preventing theft of your intellectual property (patents, trademarks and copyrights), you may wish to consult the U.S. Government website, http://www.stopfakes.gov. Part of a Department of Commerce initiative, this website includes self-help "toolkits" giving innovators guidance on how to protect intellectual property in specific countries such as China, Korea and Mexico. For questions regarding patent enforcement issues, applicants may call the U.S. Government hotline at 1-866-999-HALT (1-866-999-4158).

LICENSE FOR FOREIGN FILING UNDER

Title 35, United States Code, Section 184

Title 37, Code of Federal Regulations, 5.11 & 5.15

GRANTED

The applicant has been granted a license under 35 U.S.C. 184, if the phrase "IF REQUIRED, FOREIGN FILING LICENSE GRANTED" followed by a date appears on this form. Such licenses are issued in all applications where the conditions for issuance of a license have been met, regardless of whether or not a license may be required as

set forth in 37 CFR 5.15. The scope and limitations of this license are set forth in 37 CFR 5.15(a) unless an earlier license has been issued under 37 CFR 5.15(b). The license is subject to revocation upon written notification. The date indicated is the effective date of the license, unless an earlier license of similar scope has been granted under 37 CFR 5.13 or 5.14.

This license is to be retained by the licensee and may be used at any time on or after the effective date thereof unless it is revoked. This license is automatically transferred to any related applications(s) filed under 37 CFR 1.53(d). This license is not retroactive.

The grant of a license does not in any way lessen the responsibility of a licensee for the security of the subject matter as imposed by any Government contract or the provisions of existing laws relating to espionage and the national security or the export of technical data. Licensees should apprise themselves of current regulations especially with respect to certain countries, of other agencies, particularly the Office of Defense Trade Controls, Department of State (with respect to Arms, Munitions and Implements of War (22 CFR 121-128)); the Bureau of Industry and Security, Department of Commerce (15 CFR parts 730-774); the Office of Foreign AssetsControl, Department of Treasury (31 CFR Parts 500+) and the Department of Energy.

NOT GRANTED

No license under 35 U.S.C. 184 has been granted at this time, if the phrase "IF REQUIRED, FOREIGN FILING LICENSE GRANTED" DOES NOT appear on this form. Applicant may still petition for a license under 37 CFR 5.12, if a license is desired before the expiration of 6 months from the filing date of the application. If 6 months has lapsed from the filing date of this application and the licensee has not received any indication of a secrecy order under 35 U.S.C. 181, the licensee may foreign file the application pursuant to 37 CFR 5.15(b).

UNITED STATES PATENT AND TRADEMARK OFFICE

UNITED STATES DEPARTMENT OF COMMERCE
United States Patent and Trademark Office
Address: COMMISSIONER FOR PATENTS
P.O. Box 1450
Alexandria, Virginia 22313-1450
www.uspto.gov

INTEL/BSTZ
BLAKELY SOKOLOFF TAYLOR & ZAFMAN LLP
1279 OAKMEAD PARKWAY
SUNNYVALE, CA 94085-4040

Mail Date: 06/02/2010

Applicant	: Ben Hertzberg	: DECISION ON REQUEST FOR
Patent Number	: 7636829	: RECALCULATION of PATENT
Issue Date	: 12/22/2009	: TERM ADJUSTMENT IN VIEW
Application No	: 11/415,523	: OF WYETH AND NOTICE OF INTENT TO
Filed	: 05/02/2006	: ISSUE CERTIFICATE OF CORRECTION
		:

The Request for Recalculation is **GRANTED** to the extent indicated.

The patent term adjustment has been determined to be **839** days. The USPTO will *sua sponte* issue a certificate of correction reflecting the amount of PTA days determined by the recalculation.

Prior to the issuance of the certificate of correction, the USPTO will afford patentee an opportunity to be heard and request reconsideration. Accordingly, patentee has **one month or thirty (30) days**, whichever is longer, to file a request for reconsideration of this patent term adjustment calculation. See 35 U.S.C. 154(b)(3)(B)(ii) and 37 CFR 1.322(a)(4). No extensions of time will be granted under 37 CFR 1.136.

Patentee should use document code PET.OP if electronically filing a request for reconsideration of this patent term adjustment calculation. The patentee must also include the information required by 37 CFR 1.705(b)(2) and the fee required by 37 CFR 1.18(e). If patentee does not file a timely request for reconsideration of this patent term adjustment calculation including the information required by 37 CFR 1.705(b)(2) and the fee required by 37 CFR 1.18(e), the USPTO will issue a certificate of correction reflecting the PTA determination noted above.

Patentee should be aware that in order to preserve the right to review in the United States District Court for the District of Columbia of the USPTO patent term adjustment determination, patentee must ensure that he or she also take the steps required under 35 U.S.C. 154(b)(4)(A) in a timely manner. Nothing in the request for recalculation should be construed as providing an alternative time frame for commencing a civil action under 35 U.S.C. 154(b)(4)(A).

Any questions concerning this decision should be directed to the Office of Patent Legal Administration at 571-272-7702.

UNITED STATES PATENT AND TRADEMARK OFFICE

UNITED STATES DEPARTMENT OF COMMERCE
United States Patent and Trademark Office
Address: COMMISSIONER FOR PATENTS
P.O. Box 1450
Alexandria, Virginia 22313-1450
www.uspto.gov

APPL NO.	FILING OR 371 (c) DATE	ART UNIT	FIL FEE REC'D	ATTY.DOCKET NO	DRAWINGS	TOT CLMS	IND CLMS
11/415,551	05/01/2006	1755	1000	06311/HG		9	1

CONFIRMATION NO. 6615

CORRECTED FILING RECEIPT

OC000000020534988

01933
FRISHAUF, HOLTZ, GOODMAN & CHICK, PC
220 Fifth Avenue
16TH Floor
NEW YORK, NY 10001-7708

Date Mailed: 09/21/2006

Receipt is acknowledged of this regular Patent Application. It will be considered in its order and you will be notified as to the results of the examination. Be sure to provide the U.S. APPLICATION NUMBER, FILING DATE, NAME OF APPLICANT, and TITLE OF INVENTION when inquiring about this application. Fees transmitted by check or draft are subject to collection. Please verify the accuracy of the data presented on this receipt. **If an error is noted on this Filing Receipt, please mail to the Commissioner for Patents P.O. Box 1450 Alexandria Va 22313-1450. Please provide a copy of this Filing Receipt with the changes noted thereon. If you received a "Notice to File Missing Parts" for this application, please submit any corrections to this Filing Receipt with your reply to the Notice. When the USPTO processes the reply to the Notice, the USPTO will generate another Filing Receipt incorporating the requested corrections (if appropriate).**

Applicant(s)

Hisashi Mori, Tokyo, JAPAN;
Hirotaka Iijima, Tokyo, JAPAN;

Assignment For Published Patent Application

KONICA MINOLTA HOLDINGS, INC., Tokyo, JAPAN

Power of Attorney:

Herbert Goodman--17081
Leonard Holtz--22974
Marshall Chick--26853
Richard Barth--28180
Douglas Holtz--33902
Robert Michal--35614

Domestic Priority data as claimed by applicant

Foreign Applications

JAPAN JP2005-142380 05/16/2005
If Required, Foreign Filing License Granted: 06/06/2006

The country code and number of your priority application, to be used for filing abroad under the Paris Convention, is US11/415,551

Projected Publication Date: 11/16/2006

Non-Publication Request: No

Early Publication Request: No

Title

Ink-jet ink

Preliminary Class

106

PROTECTING YOUR INVENTION OUTSIDE THE UNITED STATES

Since the rights granted by a U.S. patent extend only throughout the territory of the United States and have no effect in a foreign country, an inventor who wishes patent protection in another country must apply for a patent in a specific country or in regional patent offices. Applicants may wish to consider the filing of an international application under the Patent Cooperation Treaty (PCT). An international (PCT) application generally has the same effect as a regular national patent application in each PCT-member country. The PCT process **simplifies** the filing of patent applications on the same invention in member countries, but **does not result** in a grant of "an international patent" and does not eliminate the need of applicants to file additional documents and fees in countries where patent protection is desired.

Almost every country has its own patent law, and a person desiring a patent in a particular country must make an application for patent in that country in accordance with its particular laws. Since the laws of many countries differ in various respects from the patent law of the United States, applicants are advised to seek guidance from specific foreign countries to ensure that patent rights are not lost prematurely.

Applicants also are advised that in the case of inventions made in the United States, the Director of the USPTO must issue a license before applicants can apply for a patent in a foreign country. The filing of a U.S. patent application serves as a request for a foreign filing license. The application's filing receipt contains further information and guidance as to the status of applicant's license for foreign filing.

Applicants may wish to consult the USPTO booklet, "General Information Concerning Patents" (specifically, the section entitled "Treaties and Foreign Patents") for more information on timeframes and deadlines for filing foreign patent applications. The guide is available either by contacting the USPTO Contact Center at 800-786-9199, or it can be viewed on the USPTO website at http://www.uspto.gov/web/offices/pac/doc/general/index.html.

For information on preventing theft of your intellectual property (patents, trademarks and copyrights), you may wish to consult the U.S. Government website, http://www.stopfakes.gov. Part of a Department of Commerce initiative, this website includes self-help "toolkits" giving innovators guidance on how to protect intellectual property in specific countries such as China, Korea and Mexico. For questions regarding patent enforcement issues, applicants may call the U.S. Government hotline at 1-866-999-HALT (1-866-999-4158).

LICENSE FOR FOREIGN FILING UNDER
Title 35, United States Code, Section 184
Title 37, Code of Federal Regulations, 5.11 & 5.15

GRANTED

The applicant has been granted a license under 35 U.S.C. 184, if the phrase "IF REQUIRED, FOREIGN FILING LICENSE GRANTED" followed by a date appears on this form. Such licenses are issued in all applications where

the conditions for issuance of a license have been met, regardless of whether or not a license may be required as set forth in 37 CFR 5.15. The scope and limitations of this license are set forth in 37 CFR 5.15(a) unless an earlier license has been issued under 37 CFR 5.15(b). The license is subject to revocation upon written notification. The date indicated is the effective date of the license, unless an earlier license of similar scope has been granted under 37 CFR 5.13 or 5.14.

This license is to be retained by the licensee and may be used at any time on or after the effective date thereof unless it is revoked. This license is automatically transferred to any related applications(s) filed under 37 CFR 1.53(d). This license is not retroactive.

The grant of a license does not in any way lessen the responsibility of a licensee for the security of the subject matter as imposed by any Government contract or the provisions of existing laws relating to espionage and the national security or the export of technical data. Licensees should apprise themselves of current regulations especially with respect to certain countries, of other agencies, particularly the Office of Defense Trade Controls, Department of State (with respect to Arms, Munitions and Implements of War (22 CFR 121-128)); the Bureau of Industry and Security, Department of Commerce (15 CFR parts 730-774); the Office of Foreign Assets Control, Department of Treasury (31 CFR Parts 500+) and the Department of Energy.

NOT GRANTED

No license under 35 U.S.C. 184 has been granted at this time, if the phrase "IF REQUIRED, FOREIGN FILING LICENSE GRANTED" DOES NOT appear on this form. Applicant may still petition for a license under 37 CFR 5.12, if a license is desired before the expiration of 6 months from the filing date of the application. If 6 months has lapsed from the filing date of this application and the licensee has not received any indication of a secrecy order under 35 U.S.C. 181, the licensee may foreign file the application pursuant to 37 CFR 5.15(b).

UNITED STATES PATENT AND TRADEMARK OFFICE

MAILED
FROM DIRECTOR'S OFFICE

FEB 1 0 2009

TECHNOLOGY CENTER 3600

Commissioner for Patents
United States Patent and Trademark Office
P.O. Box 1450
Alexandria, VA 22313-1450
www.uspto.gov

King & Schickli, PLLC
247 North Broadway
Lexington, KY 40507

In re Application of
John M. Stencel, et al.
Application No. 11/415,555
Filed: May 2, 2006
For: PARTICLE SEPARATION/ PURIFICATION SYSTEM, DIFFUSER AND RELATED METHODS

DECISION ON PETITION UNDER 37 CFR §1.144

This is a decision on the petition under 37 CFR 1.144 filed August 20, 2008, for review of a Restriction Requirement mailed April 3, 2008.

The petition is **GRANTED**.

This application was filed on May 2, 2006 and included claims 1-15 directed toward "A separator for intended use in at least partially separating at least one species of selectively charged particles from a particle mixture carried by a fluid flow", and claims 16-20 directed toward "A separator for facilitating the separation of heavier particles from a particle mixture carried by a fluid flow". On December 4, 2007 the Examiner mailed a Restriction Requirement stating that the application contains claims directed toward patentably distinct species. The Examiner identified two species: Species I. Claims 1-11; and Species II. Claims 12-20. In a response filed January 4, 2008, the Petitioner traversed the Requirement stating that the Examiner had not demonstrated that the species are "independent and distinct," and that the Examiner had not shown a serious burden necessitating restriction. On April 3, 2008, the Examiner mailed a new Restriction Requirement in which the Examiner sought "to clarify the previous restriction requirement". That Requirement again states that the application contains claims directed toward patentably distinct species. The Examiner identified two species: Species I. Claims 1-11; and Species II. Claims 12-20. In a response filed April 14, 2008, the Petitioner elected Species I, but the Petitioner traversed the Requirement stating that the Examiner had not demonstrated that the species are "independent and distinct," and that the Examiner had not shown a serious burden necessitating restriction. On July 24, 2008, the Examiner mailed a Nonfinal Office Action withdrawing claims 12-20 and making the

Restriction Requirement Final. On August 20, 2008, the Petitioner filed a Petition pursuant to 37 C.F.R. § 1.144 for review of the Restriction Requirement.

The Petitioner states that the Restriction Requirement Mailed April 3, 2008 is improper. According to the Petitioner, the Examiner has not demonstrated that the species are independent or distinct. Additionally, the Petitioner states that the Examiner has not demonstrated that there would be a serious burden to examine all the species.

M.P.E.P. § 803.01 provides the criteria for a proper requirement for restriction between patentably distinct inventions. First, the inventions must be independent or distinct as claimed. Second, there would be a serious burden on the examiner if restriction is not required.

M.P.E.P. § 806.04 provides guidance for determining if claims directed toward different species of an invention are independent or distinct. M.P.E.P. § 806.04 states, "where an application includes claims directed to different embodiments or species that could fall within the scope of a generic claim, restriction between the species may be proper if the species are independent or distinct." Furthermore M.P.E.P. § 806.04(b) states, "where species under a claimed genus are not connected in any of design, operation, or effect under the disclosure, the species are independent inventions." Finally, M.P.E.P. § 806.04(f) states, "Where two or more species are claimed, a requirement for restriction to a single species may be proper if the species are mutually exclusive. Claims to different species are mutually exclusive if one claim recites limitations disclosed for a first species but not a second, while a second claim recites limitations disclosed only for the second species and not the first." However, M.P.E.P. § 806.04(e) cautions, "Claims are definitions or descriptions of inventions. Claims themselves are never species." In summary, claims directed toward different species of an invention are independent or distinct if they are not connected in any of design, operation, or effect under the disclosure, or if one claim recites limitations disclosed for a first species but not a second, while a second claim recites limitations disclosed only for the second species and not the first.

The Restriction Requirement mailed April 3, 2008 is not proper. The examiner has not demonstrated that the identified species are independent or distinct. In the Requirement, the Examiner asserts that claims 1-11 are directed toward a different species than claims 12-20, the Examiner states that the species are independent or distinct because the claims recite mutually exclusive characteristics of the species. However, in support of the assertion, the Examiner compares an element (claim 3) only present in one of the claims of Species I with an element present in all the claims of Species II. Even if the Examiner's assertion were correct, it would only apply to the claim with that element (claim 3) and Species II. Therefore, the Examiner has not demonstrated that all the claims of Species I and all the claims of Species II are mutually exclusive. Moreover, the Examiner has not properly identified any species in the

application. Species should refer to different embodiments of an invention. Claims themselves are never species. The Restriction Requirement is improper.

The Restriction Requirement mailed April 3, 2008 is hereby vacated. The withdrawal of claims 12-20 was improper and said claims are hereby reinstated to pending status. This application is being forwarded to the Examiner for continued prosecution in accordance with this decision.

Any questions regarding this decision should be directed to Patrick Mackey at (571) 272-6916.

David Bagnell, Acting Director
Technology Center 3600
(571) 272-6999

Pm/snm: 2/6/09
SM

UNITED STATES PATENT AND TRADEMARK OFFICE

UNITED STATES DEPARTMENT OF COMMERCE
United States Patent and Trademark Office
Address: COMMISSIONER FOR PATENTS
P.O. Box 1450
Alexandria, Virginia 22313-1450
www.uspto.gov

APPL NO.	FILING OR 371 (c) DATE	ART UNIT	FIL FEE REC'D	ATTY.DOCKET NO	DRAWINGS	TOT CLMS	IND CLMS
11/415,577	05/01/2006	1772	1130	06307/HG	1	11	1

CONFIRMATION NO. 5352

UPDATED FILING RECEIPT

OC000000019674738

01933
FRISHAUF, HOLTZ, GOODMAN & CHICK, PC
220 Fifth Avenue
16TH Floor
NEW YORK, NY 10001-7708

Date Mailed: 07/19/2006

Receipt is acknowledged of this regular Patent Application. It will be considered in its order and you will be notified as to the results of the examination. Be sure to provide the U.S. APPLICATION NUMBER, FILING DATE, NAME OF APPLICANT, and TITLE OF INVENTION when inquiring about this application. Fees transmitted by check or draft are subject to collection. Please verify the accuracy of the data presented on this receipt. **If an error is noted on this Filing Receipt, please mail to the Commissioner for Patents P.O. Box 1450 Alexandria Va 22313-1450. Please provide a copy of this Filing Receipt with the changes noted thereon. If you received a "Notice to File Missing Parts" for this application, please submit any corrections to this Filing Receipt with your reply to the Notice. When the USPTO processes the reply to the Notice, the USPTO will generate another Filing Receipt incorporating the requested corrections (if appropriate).**

Applicant(s)

Takahiro Takagi, Sagamihara-shi, JAPAN;
Isamu Michihata, Tokyo, JAPAN;
Noriyasu Kuzuhara, Tokyo, JAPAN;
Koichi Saito, Kawagoe-shi, JAPAN;
Koji Tasaka, Tokyo, JAPAN;
Hiroki Umeda, Tokyo, JAPAN;
Minori Tamagawa, Tokyo, JAPAN;
Shinji Inagaki, Tokyo, JAPAN;

Assignment For Published Patent Application

KONICA MINOLTA OPTO, INC., Tokyo, JAPAN

Power of Attorney:

Herbert Goodman--17081
Leonard Holtz--22974
Marshall Chick--26853
Richard Barth--28180
Douglas Holtz--33902
Robert Michal--35614

Domestic Priority data as claimed by applicant

Foreign Applications

JAPAN JP2005-137144 05/10/2005
JAPAN JP2005-181836 06/22/2005

Projected Publication Date: To Be Determined - pending completion of Security Review

Non-Publication Request: No

Early Publication Request: No

Title

Cellulose ester film, polarizing plate and liquid crystal display

Preliminary Class

428

PROTECTING YOUR INVENTION OUTSIDE THE UNITED STATES

Since the rights granted by a U.S. patent extend only throughout the territory of the United States and have no effect in a foreign country, an inventor who wishes patent protection in another country must apply for a patent in a specific country or in regional patent offices. Applicants may wish to consider the filing of an international application under the Patent Cooperation Treaty (PCT). An international (PCT) application generally has the same effect as a regular national patent application in each PCT-member country. The PCT process **simplifies** the filing of patent applications on the same invention in member countries, but **does not result** in a grant of "an international patent" and does not eliminate the need of applicants to file additional documents and fees in countries where patent protection is desired.

Almost every country has its own patent law, and a person desiring a patent in a particular country must make an application for patent in that country in accordance with its particular laws. Since the laws of many countries differ in various respects from the patent law of the United States, applicants are advised to seek guidance from specific foreign countries to ensure that patent rights are not lost prematurely.

Applicants also are advised that in the case of inventions made in the United States, the Director of the USPTO must issue a license before applicants can apply for a patent in a foreign country. The filing of a U.S. patent application serves as a request for a foreign filing license. The application's filing receipt contains further information and guidance as to the status of applicant's license for foreign filing.

Applicants may wish to consult the USPTO booklet, "General Information Concerning Patents" (specifically, the section entitled "Treaties and Foreign Patents") for more information on timeframes and deadlines for filing foreign patent applications. The guide is available either by contacting the USPTO Contact Center at 800-786-9199, or it can be viewed on the USPTO website at http://www.uspto.gov/web/offices/pac/doc/general/index.html.

For information on preventing theft of your intellectual property (patents, trademarks and copyrights), you may wish to consult the U.S. Government website, http://www.stopfakes.gov. Part of a Department of Commerce initiative, this website includes self-help "toolkits" giving innovators guidance on how to protect intellectual property in specific countries such as China, Korea and Mexico. For questions regarding patent enforcement issues, applicants may call the U.S. Government hotline at 1-866-999-HALT (1-866-999-4158).

LICENSE FOR FOREIGN FILING UNDER
Title 35, United States Code, Section 184
Title 37, Code of Federal Regulations, 5.11 & 5.15

GRANTED

The applicant has been granted a license under 35 U.S.C. 184, if the phrase "IF REQUIRED, FOREIGN FILING LICENSE GRANTED" followed by a date appears on this form. Such licenses are issued in all applications where the conditions for issuance of a license have been met, regardless of whether or not a license may be required as set forth in 37 CFR 5.15. The scope and limitations of this license are set forth in 37 CFR 5.15(a) unless an earlier license has been issued under 37 CFR 5.15(b). The license is subject to revocation upon written notification. The date indicated is the effective date of the license, unless an earlier license of similar scope has been granted under 37 CFR 5.13 or 5.14.

This license is to be retained by the licensee and may be used at any time on or after the effective date thereof unless it is revoked. This license is automatically transferred to any related applications(s) filed under 37 CFR 1.53(d). This license is not retroactive.

The grant of a license does not in any way lessen the responsibility of a licensee for the security of the subject matter as imposed by any Government contract or the provisions of existing laws relating to espionage and the national security or the export of technical data. Licensees should apprise themselves of current regulations especially with respect to certain countries, of other agencies, particularly the Office of Defense Trade Controls, Department of State (with respect to Arms, Munitions and Implements of War (22 CFR 121-128)); the Bureau of Industry and Security, Department of Commerce (15 CFR parts 730-774); the Office of Foreign Assets Control, Department of Treasury (31 CFR Parts 500+) and the Department of Energy.

NOT GRANTED

No license under 35 U.S.C. 184 has been granted at this time, if the phrase "IF REQUIRED, FOREIGN FILING LICENSE GRANTED" DOES NOT appear on this form. Applicant may still petition for a license under 37 CFR 5.12, if a license is desired before the expiration of 6 months from the filing date of the application. If 6 months has lapsed from the filing date of this application and the licensee has not received any indication of a secrecy order under 35 U.S.C. 181, the licensee may foreign file the application pursuant to 37 CFR 5.15(b).

UNITED STATES PATENT AND TRADEMARK OFFICE

Commissioner for Patents
United States Patent and Trademark Office
P.O. Box 1450
Alexandria, VA 22313-1450
www.uspto.gov

BEYER WEAVER LLP
P.O. BOX 70250
OAKLAND, CA 94612-0250

COPY MAILED

SEP 22 2008

OFFICE OF PETITIONS

In re Application of	:	
Kyosuke Ozaki	:	
Application No. 11/415,580	:	DECISION ON PETITION
Filed: May 1, 2006	:	TO WITHDRAW
Attorney Docket No. ALPSP252	:	FROM RECORD
	:	

This is a decision on the Request to Withdraw as attorney or agent of record under 37 C.F.R. § 1.36(b), filed February 14, 2008.

The request is **DISMISSED** as moot.

A review of the file record indicates that the power of attorney to Beyer Weaver, LLP has been revoked by the assignee of the patent application on June 18, 2008. Accordingly, the request to withdraw under 37 C.F.R. § 1.36(b) is moot.

All future communications from the Office will continue to be directed to the below-listed address until otherwise notified by applicant.

Telephone inquires concerning this decision should be directed to undersigned at 571-272- 1642.

April M. Wise
Petitions Examiner
Office of Petitions

cc: BEYER WEAVER, LLP
PO BOX 1687
CUPERTINO, CA 95015-1687

UNITED STATES PATENT AND TRADEMARK OFFICE

COMMISSIONER FOR PATENTS
UNITED STATES PATENT AND TRADEMARK OFFICE
P.O. BOX 1450
ALEXANDRIA, VA 22313-1450
WWW.USPTO.GOV

Paper No. None

Manny Laveria
2256 Hamlet Dr.
Melbourne FL 32934

COPY MAILED

MAR 12 2007

OFFICE OF PETITIONS

In re Application of Manny Laveria Application No. 11/415,585 Filed: May 2, 2006 Title: FLUID WAVE ELECTRIC GENERATOR SYSTEM	: : : : : :	DECISION ON PETITION UNDER 37 C.F.R. §1.181
In re Application of Manny Laveria Application No. 10/307,569 Filed: December 2, 2002 Title: FLUID WAVE ELECTRIC GENERATOR SYSTEM	: : : : : :	DECISION ON PETITION UNDER 37 C.F.R. §1.181

This is a decision on the petition filed on August 16, 2006, pursuant to 37 C.F.R. §1.181, in Application No. 11/415,858, requesting that the papers that were submitted on May 2, 2006, be associated with Application No. 10/307,569.

Application No. 10/307,569 became abandoned for failure to reply in a timely manner to the non-final Office action, mailed March 2, 2005, which set a shortened statutory period for reply of three months. On January 23, 2006, a petition to withdraw the holding of abandonment was filed, pursuant to Rule §1.181. On January 24, 2006, a response to the non-final Office action was received. The petition was granted via the mailing of a decision on March 16, 2006.

On April 10, 2006, an Office communication was mailed in Application No. 10/307,569, indicating that the response of January 24, 2006 was not fully responsive. The communication set a one-month period for response. Applicant provided a response on May 2, 2006. However, the response did not identify the application number on the top page in a conspicuous location

- instead, the application number was placed at the bottom of the second page.

Consequently, the Office of Initial Patent Examination (OIPE) mistook the response of May 2, 2006 for a new application, assigned this new application serial number 11/415,585, and issued a Notice to File Missing Parts of Nonprovisional Application on June 22, 2006, indicating that the basic filing fee, an oath or declaration, and the accompanying surcharge would be required.

The petition is **GRANTED**.

The papers that were submitted on May 2, 2006 have been copied from the electronic file associated with Application No. 11/415,585 and placed into the electronic file associated with Application No. 10/307,569.

So as to prevent this type of incident from reoccurring in the future, Applicant may wish to consider complying with 37 C.F.R. §1.5, which sets forth, *in pertinent part*:

> When a letter directed to the Patent and Trademark Office concerns a previously filed application for a patent, it must identify on the top page in a conspicuous location (emphasis included), the application number (consisting of the series code and the serial number; e.g., 07/123,456), or the serial number and filing date assigned to that application by the Patent and Trademark Office…

OIPE will be notified of this decision, so that the document received on May 2, 2006 in conjunction with Application No. 11/415,858 will not be processed as a new application.

OIPE will then notify the Technology Center of this decision. The Technology Center's support staff will notify the Examiner of this decision, so that the amendment which was received on May 2, 2006 and associated with Application No. 11/415,585 can be processed in Application No. 10/307,569.

Telephone inquiries regarding *this decision* should be directed to the undersigned at (571) 272-3225. All other inquiries concerning examination procedures should be directed to the Technology Center.

Paul Shanoski
Senior Attorney
Office of Petitions
United States Patent and Trademark Office

UNITED STATES PATENT AND TRADEMARK OFFICE

COMMISSIONER FOR PATENTS
UNITED STATES PATENT AND TRADEMARK OFFICE
P.O. BOX 1450
ALEXANDRIA, VA 22313-1450
WWW.USPTO.GOV

Paper No. None

Manny Laveria
2256 Hamlet Dr.
Melbourne FL 32934

COPY MAILED

MAR 12 2007

OFFICE OF PETITIONS

In re Application of Manny Laveria Application No. 11/415,585 Filed: May 2, 2006 Title: FLUID WAVE ELECTRIC GENERATOR SYSTEM	:	DECISION ON PETITION UNDER 37 C.F.R. §1.181
In re Application of Manny Laveria Application No. 10/307,569 Filed: December 2, 2002 Title: FLUID WAVE ELECTRIC GENERATOR SYSTEM	:	DECISION ON PETITION UNDER 37 C.F.R. §1.181

This is a decision on the petition filed on August 16, 2006, pursuant to 37 C.F.R. §1.181, in Application No. 11/415,858, requesting that the papers that were submitted on May 2, 2006, be associated with Application No. 10/307,569.

Application No. 10/307,569 became abandoned for failure to reply in a timely manner to the non-final Office action, mailed March 2, 2005, which set a shortened statutory period for reply of three months. On January 23, 2006, a petition to withdraw the holding of abandonment was filed, pursuant to Rule §1.181. On January 24, 2006, a response to the non-final Office action was received. The petition was granted via the mailing of a decision on March 16, 2006.

On April 10, 2006, an Office communication was mailed in Application No. 10/307,569, indicating that the response of January 24, 2006 was not fully responsive. The communication set a one-month period for response. Applicant provided a response on May 2, 2006. However, the response did not identify the application number on the top page in a conspicuous location

– instead, the application number was placed at the bottom of the second page.

Consequently, the Office of Initial Patent Examination (OIPE) mistook the response of May 2, 2006 for a new application, assigned this new application serial number 11/415,585, and issued a Notice to File Missing Parts of Nonprovisional Application on June 22, 2006, indicating that the basic filing fee, an oath or declaration, and the accompanying surcharge would be required.

The petition is **GRANTED**.

The papers that were submitted on May 2, 2006 have been copied from the electronic file associated with Application No. 11/415,585 and placed into the electronic file associated with Application No. 10/307,569.

So as to prevent this type of incident from reoccurring in the future, Applicant may wish to consider complying with 37 C.F.R. §1.5, which sets forth, *in pertinent part*:

> When a letter directed to the Patent and Trademark Office concerns a previously filed application for a patent, it must identify on the top page in a conspicuous location (emphasis included), the application number (consisting of the series code and the serial number; e.g., 07/123,456), or the serial number and filing date assigned to that application by the Patent and Trademark Office…

OIPE will be notified of this decision, so that the document received on May 2, 2006 in conjunction with Application No. 11/415,858 will not be processed as a new application.

OIPE will then notify the Technology Center of this decision. The Technology Center's support staff will notify the Examiner of this decision, so that the amendment which was received on May 2, 2006 and associated with Application No. 11/415,585 can be processed in Application No. 10/307,569.

Telephone inquiries regarding *this decision* should be directed to the undersigned at (571) 272-3225. All other inquiries concerning examination procedures should be directed to the Technology Center.

Paul Shanoski
Senior Attorney
Office of Petitions
United States Patent and Trademark Office

UNITED STATES PATENT AND TRADEMARK OFFICE

Commissioner for Patents
United States Patent and Trademark Office
P.O. Box 1450
Alexandria, VA 22313-1450
www.uspto.gov

BEYER WEAVER LLP
P.O. BOX 70250
OAKLAND CA 94612-0250

COPY MAILED

MAR 2 4 2008

OFFICE OF PETITIONS

In re Application of	:	
SAITO, Kyozo	:	
Application No. 11/415,586	:	DECISION ON PETITION
Filed: May 01, 2006	:	TO WITHDRAW
Attorney Docket No. **ALPSP253**	:	FROM RECORD

This is a decision on the Request to Withdraw as attorney or agent of record under 37 C.F.R. § 1.36(b), filed February 14, 2008.

The request is **APPROVED**.

A grantable request to withdraw as attorney/agent of record must be signed by every attorney/agent seeking to withdraw or contain a clear indication that one attorney is signing on behalf of another/others. A request to withdraw will not be approved unless at least 30 (thirty) days would remain between the date of approval and the later of the expiration date of a time to file a response or the expiration date of the maximum time period which can be extended under 37 C.F.R. § 1.136(a).

The request was signed by James Austin. Haruo Yawata has been withdrawn as attorney or agent of record; all other attorneys remain of record. The correspondence address of record remains unchanged.

Telephone inquiries concerning this decision should be directed to Tredelle Jackson at 571-272-2783.

Tredelle D. Jackson
Petitions Examiner
Office of Petitions

UNITED STATES PATENT AND TRADEMARK OFFICE

UNITED STATES DEPARTMENT OF COMMERCE
United States Patent and Trademark Office
Address: COMMISSIONER FOR PATENTS
P.O. Box 1450
Alexandria, Virginia 22313-1450
www.uspto.gov

APPLICATION NO.	FILING DATE	FIRST NAMED INVENTOR	ATTORNEY DOCKET NO.	CONFIRMATION NO.
11/415,593	05/02/2006	Mark Brister	DEXCOM.051C1	4833

7590 10/25/2007
KNOBBE MARTENS OLSON & BEAR LLP
2040 MAIN STREET
FOURTEENTH FLOOR
IRVINE, CA 92614

EXAMINER
KOONTZ, TAMMY J

ART UNIT	PAPER NUMBER
3974	

NOTIFICATION DATE	DELIVERY MODE
10/25/2007	ELECTRONIC

DECISION GRANTING PETITION UNDER 37 CFR 1.138(d)

The declaration of express abandonment is recognized

This is in response to the petition under 37 CFR 1.138(d), requesting for a refund of any previously paid search fee and excess claims fee in the above-identified application.

The petition is granted.

The express abandonment is recognized. Any previously paid search fee and excess claims fee are hereby refunded.

Telephone inquiries should be directed to the Office of Data Management at (571) 272-4200.

Tammy J. Koontz

Patent Publication Branch
Office of Data Management

```
Adjustment date: 10/24/2007  KKING1
05/04/2006 HVUONG1  00000015 11415593
02 FC:2111                    -250.00 OP
04 FC:2202                     -50.00 OP

Repln. Ref: 10/24/2007 KKING1   0010482600
DA#:111410   Name/Number:11415593
FC: 9204                    $300.00 CR
```


FORM PET651G (Rev. 08/07)

UNITED STATES PATENT AND TRADEMARK OFFICE

2 5 NOV 2009

Commissioner for Patents
United States Patent and Trademark Office
P.O. Box 1450
Alexandria, VA 22313-1450
www.uspto.gov

Morrison & Foerster LLP
755 Page Mill Rd.
Palo Alto CA 94304-1018

In re Application of
BROWN et al.
Application No.: 11/415,612
Filed: May 01, 2006
Attorney Docket No.: 229752005803
For: HYALURONAN AS A CYTOTOXIC AGENT, DRUG PRE-SENSITIZER AND CHEMO-SENSITIZER IN THE TREATMENT OF DISEASE

DECISION ON PETITION

This is a decision on the "Petition to accept benefit claim under 35 U.S.C. 120," filed June 29, 2009, to accept an unintentionally delayed claim under 35 U.S.C. §120 for the benefit of the prior-filed Australian provisional application set forth in the concurrently filed a supplemental Application Data Sheet (ADS). Because the petition seeks to add a delayed foreign priority claim, the petition is being treated as a petition under 37 CFR 1.55 to accept an unintentionally delayed claim under 35 U.S.C. §119 (a)-(d).

The petition is **DISMISSED**.

A petition under 37 CFR 1.55(c) to accept an unintentionally delayed claim for priority requires:

(1) The nonprovisional application claiming the benefit of an earlier filing date must be filed on or after November 29, 2000;

(2) the claim submitted with the petition must identify the prior foreign application for which priority is claimed, as well as any foreign application for the same subject matter and having a filing date before that of the application for which priority is claimed, by the application number, country, and the filing date, and be included either in an oath or declaration (37 CFR 1.63(c)(2)) or in an Application Data Sheet (37 CFR 1.76(b)(6);

(3) the surcharge as set forth in 37 CFR 1.17(t);

(4) a statement that the entire delay between the date the claim was due under 37 CFR 1.55(a)(1) and the date the claim was filed was unintentional. (The Director may require additional information where there is a question whether the delay was unintentional.); and

(5) the above-identified nonprovisional application must be filed within 12 months of the filing date of the foreign application.

The above-identified pending nonprovisional application was filed on May 01, 2006, which is after November 29, 2000. With regard to item (2), although the supplemental ADS filed with the instant petition is unsigned, the signed supplemental ADS filed on November 13, 2009 also identifies the foreign application for which priority is claimed by application number, country and filing date. The surcharge as set forth in 37 CFR 1.17(t) has been paid. Lastly, applicant's statement that "the omission of the benefit claim by Applicants is believed to be unintentional for the entire period from the date the claim of benefit was doue for this application to the date of submission of this petition" is construed as meaning that "the entire delay between the date the claim was due under 37 CFR 1.55(a)(1) and the date the claim was filed was unintentional." If this is incorrect, petitioner must immediately notify the Office of PCT Legal Administration. As construed, petitioner's statement satisfied item (4) above.

With regard to Item (5), the filing date of the Australian provisional application identified on the ADS, i.e. "7/14/01" does not fall within a period of 12 months preceding the filing date of the international application or present application.[1]

Any questions concerning this matter may be directed to Anthony Smith at (571) 272-3298.

Any further correspondence with respect to this matter may be filed electronically via EFS-Web selecting the document description "Petition for review and processing by the PCT Legal Office" or by mail addressed to Mail Stop PCT, Commissioner for Patents, Office of

---

[1]It is noted that while a reference under 35 U.S.C. 120 and 37 CFR 1.78(a) to the prior-filed National Stage application was not included in an ADS or in the first sentence of the specification following the title as required under 37 CFR 1.78(a), reference nevertheless was made in the transmittal letter filed with the above-identified application. The current procedure where a claim for priority under 37 CFR § 1.78(a)(3) is not included in the first sentence of the specification or in an ADS but does appear either in the oath or declaration or a transmittal letter filed with the application and the Office notes the claim for priority, no petition will be required to accept a late claim for priority. This is because the application would have been scheduled for publication on the basis of the information concerning the claim submitted elsewhere in the application within the time period set forth in 37 CFR § 1.78(a)(2)(ii). However, on the other hand, if the USPTO does not note the claim for priority to the prior-filed application(s) set forth in the oath or declaration or transmittal letter submitted with the application, a petition will be required to accept a late claim for priority under 37 CFR § 1.78(a)(3). In the instant case, the Office noted the claim for priority of the prior-filed application in the transmittal letter filed with the application, as shown by its inclusion on the filing receipt. Applicants have since submitted an ADS, filed November 13, 2009 in compliance with 37 CFR 1.78 claiming benefit under 35 U.S.C. 120 and 365(c) to U.S. application no. 10086,744, which is a U.S. National Stage application of PCT/AU01/00849 having an international filing date of 13 July 2001.

PCT Legal Administration, P.O. Box 1450, Alexandria, Virginia 22313-1450, with the contents of the letter marked to the attention of the Office of PCT Legal Administration

Boris Milef
Legal Examiner
Office of PCT Legal Administration

UNITED STATES PATENT AND TRADEMARK OFFICE

Commissioner for Patents
United States Patent and Trademark Office
P.O. Box 1450
Alexandria, VA 22313-1450
www.uspto.gov

0 2 MAR 2010

Morrison & Foerster LLP
755 Page Mill Rd.
Palo Alto CA 94304-1018

In re Application of
BROWN et al.
Application No.: 11/415,612
Filed: May 01, 2006
Attorney Docket No.: 229752005803
For: HYALURONAN AS A CYTOTOXIC AGENT, DRUG PRE-SENSITIZER AND CHEMO-SENSITIZER IN THE TREATMENT OF DISEASE

DECISION ON PETITION

This is a decision on the "Petition to Accept Benefit Claim under 35 U.S.C. 119(a)-(d) Where Benefit Claim Is Untimely and Amendment of Specification," filed December 11, 2009.

The petition is **GRANTED**.

A petition under 37 CFR 1.55(c) to accept an unintentionally delayed claim for priority requires:

(1) The nonprovisional application claiming the benefit of an earlier filing date must be filed on or after November 29, 2000;

(2) the claim submitted with the petition must identify the prior foreign application for which priority is claimed, as well as any foreign application for the same subject matter and having a filing date before that of the application for which priority is claimed, by the application number, country, and the filing date, and be included either in an oath or declaration (37 CFR 1.63(c)(2)) or in an Application Data Sheet (37 CFR 1.76(b)(6);

(3) the surcharge as set forth in 37 CFR 1.17(t);

(4) a statement that the entire delay between the date the claim was due under 37 CFR 1.55(a)(1) and the date the claim was filed was unintentional. (The Director may require additional information where there is a question

whether the delay was unintentional.); and

(5) the above-identified nonprovisional application must be filed within 12 months of the filing date of the foreign application.

The above-identified pending nonprovisional application was filed on May 01, 2006, which is after November 29, 2000, and the parent national stage application was filed within 12 months of July 14, 2000, which is the earliest filing date of the foreign application to which benefit is claimed. An Application Data Sheet filed on December 11, 2009 also identifies the foreign applications for which priority is claimed by application number, country and filing date. The surcharge as set forth in 37 CFR 1.17(t) has been paid. Lastly, petitioner has provided an adequate statement of unintentional delay.

All requirements being met, the petition under 37 CFR 1.55(c) to accept an unintentionally delayed claim for priority under 35 U.S.C. § 119(a)-(d) is **granted**.

A Corrected Filing Receipt which reflects the above-noted foreign application accompanies this decision on petition.

This matter is being referred to Technology Center AU 1618 for examination in due course and for consideration by the examiner of record of the foreign priority claim under 35 U.S.C. § 119(a)-(d).

Any questions concerning this matter may be directed to Anthony Smith at (571) 272-3298.

B Milef

Boris Milef
Senior PCT Legal Examiner
Office of PCT Legal Administration

UNITED STATES PATENT AND TRADEMARK OFFICE

Commissioner for Patents
United States Patent and Trademark Office
P.O. Box 1450
Alexandria, VA 22313-1450
www.uspto.gov

CHERNOFF, VILHAUER, MCCLUNG & STENZEL, LLP
601 SW SECOND AVENUE
SUITE 1600
PORTLAND, OR 97204-3157

MAILED

JAN 06 2010

OFFICE OF PETITIONS

In re Application of Michael P. Wagner Application No. 11/415,615 Filed: May 1, 2006 Attorney Docket No. 8772.0001	:	DECISION ON PETITION TO WITHDRAW FROM RECORD

This is a decision on the Request to Withdraw as attorney or agent of record under 37 C.F.R. § 1.36(b), filed October 20, 2009 and resubmitted November 5, 2009.

The request is **DISMISSED** as moot.

A review of the file record indicates that the power of attorney to Chernoff, Vilha;uer, Mcclung & Stenzel, LLP has been revoked by the applicant of the patent application on November 12, 2009. Accordingly, the request to withdraw under 37 C.F.R. § 1.36(b) is moot.

All future communications from the Office will continue to be directed to the below-listed address until otherwise notified by applicant.

Telephone inquires concerning this decision should be directed to undersigned at 571-272-1642. All other inquires concerning the examination or status of this application should be directed to the Technology Center.

/AMW/
April M. Wise
Petitions Examiner
Office of Petitions

cc: MICHAEL P. WAGNER
PO BOX 1482
SHERWOOD, OR 97140

UNITED STATES PATENT AND TRADEMARK OFFICE

Commissioner for Patents
United States Patent and Trademark Office
P.O. Box 1450
Alexandria, VA 22313-1450
www.uspto.gov

COPY MAILED

AUG 0 7 2007

OFFICE OF PETITIONS

MORRISON & FOERSTER LLP
12531 HIGH BLUFF DRIV, SUITE 100
SAN DIEGO CA 92130-2040

In re Application of	:	
MICKELSON, Brad	:	
Application No. 11/415,634	:	DECISION ON PETITION
Filed: May 2, 2006	:	TO WITHDRAW
Attorney Docket No. **563312000300**	:	FROM RECORD
	:	

This is a decision on the Request to Withdraw as attorney or agent of record under 37 C.F.R. § 1.36(b), filed March 30, 2007.

The request is **NOT APPROVED** as moot.

A review of the file record indicates that the power of attorney to **MORRISON & FOERSTER LLP** has been revoked by the assignee of the patent application on July 20, 2007. Accordingly, the request to withdraw under 37 C.F.R. § 1.36(b) is moot.

All future communications from the Office will continue to be directed to the below-listed address until otherwise notified by applicant.

Telephone inquires concerning this decision should be directed to the undersigned at 571-272-7253.

Monica A. Graves
Petitions Examiner
Office of Petitions

cc: **GORDON & REES LLP**
101 WEST BROADWAY, SUITE 1600
SAN DIEGO, CA 92101

UNITED STATES PATENT AND TRADEMARK OFFICE

Commissioner for Patents
United States Patent and Trademark Office
P.O. Box 1450
Alexandria, VA 22313-1450
www.uspto.gov

EHUD MENDELSON
GAMBA GROUP LLC
11190 HERON BAY BLVD.
SUITE 916
CORAL SPRINGS FL 33076

COPY MAILED

MAR 0 9 2007

OFFICE OF PETITIONS

In re Application of	:	
Mendelson	:	
Application No. 11/415,665	:	DECISION ON PETITION
Filed: May 2, 2006	:	TO MAKE SPECIAL UNDER
Attorney Docket No. PD102	:	37 CFR 1.102(c)(2)
	:	

This is a decision on the petition under 37 CFR 1.102(c)(2)(i) & (ii), filed May 2, 2006, to make the above-identified application special based on the invention (a) materially enhancing the quality of the environment as set forth in M.P.E.P. § 708.02, Section V and (b) materially contributing to certain categories related to energy resource as set forth in M.P.E.P. § 708.02, Section VI.

The petitions are **DISMISSED**.

A grantable petition to make an application special under 37 CFR 1.102(c)(2)(i) and MPEP § 708.02, Section V: Environmental Quality, must state that special status is sought because the invention materially enhances the quality of the environment by contributing to the restoration or maintenance of basic life-sustaining natural elements. If the disclosure is not clear on its face that the claimed invention materially enhances the quality of the environment by contributing to the restoration or maintenance of one of the basic life-sustaining natural elements, the petition must be accompanied by a statement by the applicant, assignee, or an attorney/agent registered to practice before the Office explaining how the materiality standard is met. No fee is required.

The instant petition fails to show the invention meets the materiality standard. The instant invention is directed to a system and method for using cellular phone or other location based navigation systems. The navigation systems are used for detecting and navigating to empty parking spaces; thereby reducing the consumption of fuel does not in itself satisfy the materiality standard. The materiality standard does not permit the applicant to speculate as to how a hypothetical end-user might specially apply the invention in a manner that could materially enhance the quality of the environment by contributing to the restoration or maintenance of basic life-sustaining natural elements.

A grantable petition to make an application special under 37 CFR 1.102(c)(2)(ii) and MPEP § 708.02, Section VI: Energy, must state that special status is sought because the invention materially contributes to (A) the discovery or development of energy resources, or (B) the more efficient utilization and conservation of energy resources. Examples of inventions in category (A) would be developments in

fossil fuels (natural gas, coal, and petroleum), hydrogen fuel technologies, nuclear energy, solar energy, etc. Category (B) would include inventions relating to the reduction of energy consumption in combustion systems, industrial equipment, household appliances, etc. If the application disclosure is not clear on its face that the claimed invention materially contributes to category (A) or (B), the petition must be accompanied by a statement under 37 CFR 1.102 by the applicant, assignee, or an attorney/agent registered to practice before the Office explaining how the materiality standard is met. No fee is required.

The instant petition, fails to meet the materiality standard of 37 CFR 102(c)(2)(ii). Although the disclosure may be generally directed to a system and method for using cellular phone or other location based navigation systems, the materiality standard of the rule has not been met, i.e., petitioner has failed to state how the claimed invention contributes in a significant, substantial, or noticeable manner to inventions relating to the reduction of energy consumption. The materiality standard does not permit the applicant to speculate as to how a hypothetical end-user might specially apply the invention in a manner that could materially contribute to category (A) or (B) as set forth above. Accordingly, it is unclear as to how the claimed invention would contribute in a significant manner to category (A) or (B).

This lack of meeting the materiality standards of 37 CFR 102(c)(2) (i) and (ii) does not permit the applicant to enjoy the benefit of advanced examination.

Further correspondence with respect to this matter should be addressed as follows:

By Mail: Mail Stop PETITION
Commissioner for Patents
P. O. Box 1450
Alexandria, VA 22313-1450

By hand: U. S. Patent and Trademark Office
Customer Service Window, Mail Stop Petitions
Randolph Building
401 Dulany Street
Alexandria, VA 22314

By FAX: (571) 273-8300

Telephone inquiries concerning this decision should be directed to Jefferey Harold at 571-272-7519, or to the undersigned at 571-272-7099.

All other inquiries concerning either the examination or status of the application should be directed to the Technology Center.

The application is being forwarded to the Technology Center Art Unit 2612 for action in its regular turn.

David Bucci
Petitions Examiner
Office of Petitions

UNITED STATES PATENT AND TRADEMARK OFFICE

UNITED STATES DEPARTMENT OF COMMERCE
United States Patent and Trademark Office
Address: COMMISSIONER FOR PATENTS
P.O. Box 1450
Alexandria, Virginia 22313-1450
www.uspto.gov

PEARNE & GORDON LLP
1801 EAST 9TH STREET
SUITE 1200
CLEVELAND, OH 44114-3108

Mail Date: 04/21/2010

Applicant	: Kazuhiko Matsumoto	: DECISION ON REQUEST FOR
Patent Number	: 7653231	: RECALCULATION of PATENT
Issue Date	: 01/26/2010	: TERM ADJUSTMENT IN VIEW
Appliction No	: 11/415,680	: OF WYETH AND NOTICE OF INTENT TO
Filed	: 05/02/2006	: ISSUE CERTIFICATE OF CORRECTION
		:

The Request for Recalculation is **GRANTED** to the extent indicated.

The patent term adjustment has been determined to be **923** days. The USPTO will *sua sponte* issue a certificate of correction reflecting the amount of PTA days determined by the recalculation.

Prior to the issuance of the certificate of correction, the USPTO will afford patentee an opportunity to be heard and request reconsideration. Accordingly, patentee has **one month or thirty (30) days**, whichever is longer, to file a request for reconsideration of this patent term adjustment calculation. See 35 U.S.C. 154(b)(3)(B)(ii) and 37 CFR 1.322(a)(4). No extensions of time will be granted under 37 CFR 1.136.

Patentee should use document code PET.OP if electronically filing a request for reconsideration of this patent term adjustment calculation. The patentee must also include the information required by 37 CFR 1.705(b)(2) and the fee required by 37 CFR 1.18(e). If patentee does not file a timely request for reconsideration of this patent term adjustment calculation including the information required by 37 CFR 1.705(b)(2) and the fee required by 37 CFR 1.18(e), the USPTO will issue a certificate of correction reflecting the PTA determination noted above.

Patentee should be aware that in order to preserve the right to review in the United States District Court for the District of Columbia of the USPTO patent term adjustment determination, patentee must ensure that he or she also take the steps required under 35 U.S.C. 154(b)(4)(A) in a timely manner. Nothing in the request for recalculation should be construed as providing an alternative time frame for commencing a civil action under 35 U.S.C. 154(b)(4)(A).

Any questions concerning this decision should be directed to the Office of Patent Legal Administration at 571-272-7702.

UNITED STATES PATENT AND TRADEMARK OFFICE

Commissioner for Patents
United States Patent and Trademark Office
P.O. Box 1450
Alexandria, VA 22313-1450
www.uspto.gov

WILLIAMS G. SYKES
3669 SEAGULL BLUFF DRIVE
VIRGINIA BEACH, VA 23455

COPY MAILED

NOV 20 2007

OFFICE OF PETITIONS

In re Application of	:	
Gloria L. Holland	:	
Application No. 11/415,686	:	ON PETITION
Filed: May 2, 2006	:	
Attorney Docket No. 50704	:	

This is a decision on the petition under 37 CFR 1.137(b), filed on June 22, 2007, 2006, to revive the above-identified application. The delay in responding is regretted.

The petition is **DISMISSED**.

The application became abandoned for failure to reply in a timely manner to the Notice of Allowance and Fee(s) Due mailed October 17, 2006. A Notice of Abandonment was mailed on June 19, 2007.

A grantable petition under 37 CFR 1.137(b) must be accompanied by: (1) the required reply, unless previously filed; (2) the petition fee as set forth in 37 CFR 1.17(m); (3) a statement that the entire delay in filing the required reply from the due date for the reply until the filing of a grantable petition pursuant to 37 CFR 1.137(b) was unintentional; and (4) any terminal disclaimer (and fee as set forth in 37 CFR 1.20(d)) required by 37 CFR 1.137(d). Where there is a question as to whether either the abandonment or the delay in filing a petition under 37 CFR 1.137 was unintentional, the Commissioner may require additional information. See MPEP 711.03(c)(III)(C) and (D). The instant petition lacks item(s) (1).

The Office acknowledges receipt of $750 for treatment of the instant petition. However, Office records fail to show that petitioner submitted the required issue fee and publication fee. Effective September 30, 2007, the issue fee was increased to $720 and the required publication fee is $300. Therefore, this application cannot be revived until fees totaling $1,020 has been submitted.

Since petitioner asserts that he has never received any correspondence from the USPTO, because he mistakenly used his registration number instead of his customer number, a copy of the Notice

of Allowance and Fee(s) Due/Notice of Allowability mailed October 17, 2006 is enclosed for completion of petitioner's records.

If petitioner desires to have the information normally found thereon printed on the patent, the attached blank Fee(s) Transmittal form should be completed and returned with the renewed petition.

Any request for reconsideration of this decision must be submitted within **TWO (2) MONTHS** from the mail date of this decision. Extensions of time under 37 CFR 1.136(a) are permitted. The reconsideration request should include a cover letter entitled "Renewed Petition under 37 CFR 1.137(b)." This is **not** a final agency action within the meaning of 5 U.S.C. § 704.

Further correspondence with respect to this matter should be addressed as follows:

By mail: Mail Stop PETITION
Commissioner for Patents
P. O. Box 1450
Alexandria, VA 22313-1450

By hand: U. S. Patent and Trademark Office
Customer Service Window, Mail Stop Petitions
Randolph Building
401 Dulany Street
Alexandria, VA 22314

The centralized facsimile number is **(571) 273-8300.**

Telephone inquiries concerning this decision should be directed to the undersigned at (571) 272-3226.

Andrea Smith
Petitions Examiner
Office of Petitions

Enclosures: Privacy Act Statement
Notice of Allowance and Fee(s) Due/Notice of Allowability
Blank Fee(s) Transmittal Form

Privacy Act Statement

The **Privacy Act of 1974 (P.L. 93-579)** requires that you be given certain information in connection with your submission of the attached form related to a patent application or patent. Accordingly, pursuant to the requirements of the Act, please be advised that: (1) the general authority for the collection of this information is 35 U.S.C. 2(b)(2); (2) furnishing of the information solicited is voluntary; and (3) the principal purpose for which the information is used by the U.S. Patent and Trademark Office is to process and/or examine your submission related to a patent application or patent. If you do not furnish the requested information, the U.S. Patent and Trademark Office may not be able to process and/or examine your submission, which may result in termination of proceedings or abandonment of the application or expiration of the patent.

The information provided by you in this form will be subject to the following routine uses:

1. The information on this form will be treated confidentially to the extent allowed under the Freedom of Information Act (5 U.S.C. 552) and the Privacy Act (5 U.S.C 552a). Records from this system of records may be disclosed to the Department of Justice to determine whether disclosure of these records is required by the Freedom of Information Act.
2. A record from this system of records may be disclosed, as a routine use, in the course of presenting evidence to a court, magistrate, or administrative tribunal, including disclosures to opposing counsel in the course of settlement negotiations.
3. A record in this system of records may be disclosed, as a routine use, to a Member of Congress submitting a request involving an individual, to whom the record pertains, when the individual has requested assistance from the Member with respect to the subject matter of the record.
4. A record in this system of records may be disclosed, as a routine use, to a contractor of the Agency having need for the information in order to perform a contract. Recipients of information shall be required to comply with the requirements of the Privacy Act of 1974, as amended, pursuant to 5 U.S.C. 552a(m).
5. A record related to an International Application filed under the Patent Cooperation Treaty in this system of records may be disclosed, as a routine use, to the International Bureau of the World Intellectual Property Organization, pursuant to the Patent Cooperation Treaty.
6. A record in this system of records may be disclosed, as a routine use, to another federal agency for purposes of National Security review (35 U.S.C. 181) and for review pursuant to the Atomic Energy Act (42 U.S.C. 218(c)).
7. A record from this system of records may be disclosed, as a routine use, to the Administrator, General Services, or his/her designee, during an inspection of records conducted by GSA as part of that agency's responsibility to recommend improvements in records management practices and programs, under authority of 44 U.S.C. 2904 and 2906. Such disclosure shall be made in accordance with the GSA regulations governing inspection of records for this purpose, and any other relevant (*i.e.*, GSA or Commerce) directive. Such disclosure shall not be used to make determinations about individuals.
8. A record from this system of records may be disclosed, as a routine use, to the public after either publication of the application pursuant to 35 U.S.C. 122(b) or issuance of a patent pursuant to 35 U.S.C. 151. Further, a record may be disclosed, subject to the limitations of 37 CFR 1.14, as a routine use, to the public if the record was filed in an application which became abandoned or in which the proceedings were terminated and which application is referenced by either a published application, an application open to public inspection or an issued patent.
9. A record from this system of records may be disclosed, as a routine use, to a Federal, State, or local law enforcement agency, if the USPTO becomes aware of a violation or potential violation of law or regulation.

UNITED STATES PATENT AND TRADEMARK OFFICE

COPY

UNITED STATES DEPARTMENT OF COMMERCE
United States Patent and Trademark Office
Address: COMMISSIONER FOR PATENTS
P.O. Box 1450
Alexandria, Virginia 22313-1450
www.uspto.gov

NOTICE OF ALLOWANCE AND FEE(S) DUE

50704 7590 10/17/2006

MICHAEL DANY
87 HIGH VIEW DRIVE
WADING RIVER, NY 11792

EXAMINER	
LE, HUYEN D	
ART UNIT	PAPER NUMBER
3751	

DATE MAILED: 10/17/2006

APPLICATION NO.	FILING DATE	FIRST NAMED INVENTOR	ATTORNEY DOCKET NO.	CONFIRMATION NO.
11/415,686	05/02/2006	Gloria L. Holland	50704	5151

TITLE OF INVENTION: TARGET BUILT INTO A TOILET OR URINAL

APPLN. TYPE	SMALL ENTITY	ISSUE FEE DUE	PUBLICATION FEE DUE	PREV. PAID ISSUE FEE	TOTAL FEE(S) DUE	DATE DUE
nonprovisional	YES	$700	$300	$0	$1000	01/17/2007

THE APPLICATION IDENTIFIED ABOVE HAS BEEN EXAMINED AND IS ALLOWED FOR ISSUANCE AS A PATENT. PROSECUTION ON THE MERITS IS CLOSED. THIS NOTICE OF ALLOWANCE IS NOT A GRANT OF PATENT RIGHTS. THIS APPLICATION IS SUBJECT TO WITHDRAWAL FROM ISSUE AT THE INITIATIVE OF THE OFFICE OR UPON PETITION BY THE APPLICANT. SEE 37 CFR 1.313 AND MPEP 1308.

THE ISSUE FEE AND PUBLICATION FEE (IF REQUIRED) MUST BE PAID WITHIN THREE MONTHS FROM THE MAILING DATE OF THIS NOTICE OR THIS APPLICATION SHALL BE REGARDED AS ABANDONED. THIS STATUTORY PERIOD CANNOT BE EXTENDED. SEE 35 U.S.C. 151. THE ISSUE FEE DUE INDICATED ABOVE DOES NOT REFLECT A CREDIT FOR ANY PREVIOUSLY PAID ISSUE FEE IN THIS APPLICATION. IF AN ISSUE FEE HAS PREVIOUSLY BEEN PAID IN THIS APPLICATION (AS SHOWN ABOVE), THE RETURN OF PART B OF THIS FORM WILL BE CONSIDERED A REQUEST TO REAPPLY THE PREVIOUSLY PAID ISSUE FEE TOWARD THE ISSUE FEE NOW DUE.

HOW TO REPLY TO THIS NOTICE:

I. Review the SMALL ENTITY status shown above.

If the SMALL ENTITY is shown as YES, verify your current SMALL ENTITY status:

A. If the status is the same, pay the TOTAL FEE(S) DUE shown above.

B. If the status above is to be removed, check box 5b on Part B - Fee(s) Transmittal and pay the PUBLICATION FEE (if required) and twice the amount of the ISSUE FEE shown above, or

If the SMALL ENTITY is shown as NO:

A. Pay TOTAL FEE(S) DUE shown above, or

B. If applicant claimed SMALL ENTITY status before, or is now claiming SMALL ENTITY status, check box 5a on Part B - Fee(s) Transmittal and pay the PUBLICATION FEE (if required) and 1/2 the ISSUE FEE shown above.

II. PART B - FEE(S) TRANSMITTAL, or its equivalent, must be completed and returned to the United States Patent and Trademark Office (USPTO) with your ISSUE FEE and PUBLICATION FEE (if required). If you are charging the fee(s) to your deposit account, section "4b" of Part B - Fee(s) Transmittal should be completed and an extra copy of the form should be submitted. If an equivalent of Part B is filed, a request to reapply a previously paid issue fee must be clearly made, and delays in processing may occur due to the difficulty in recognizing the paper as an equivalent of Part B.

III. All communications regarding this application must give the application number. Please direct all communications prior to issuance to Mail Stop ISSUE FEE unless advised to the contrary.

IMPORTANT REMINDER: Utility patents issuing on applications filed on or after Dec. 12, 1980 may require payment of maintenance fees. It is patentee's responsibility to ensure timely payment of maintenance fees when due.

PTOL-85 (Rev. 07/06) Approved for use through 04/30/2007.

PART B - FEE(S) TRANSMITTAL

Complete and send this form, together with applicable fee(s), to: Mail **Mail Stop ISSUE FEE**
Commissioner for Patents
P.O. Box 1450
Alexandria, Virginia 22313-1450
or Fax (571)-273-2885

INSTRUCTIONS: This form should be used for transmitting the ISSUE FEE and PUBLICATION FEE (if required). Blocks 1 through 5 should be completed where appropriate. All further correspondence including the Patent, advance orders and notification of maintenance fees will be mailed to the current correspondence address as indicated unless corrected below or directed otherwise in Block 1, by (a) specifying a new correspondence address; and/or (b) indicating a separate "FEE ADDRESS" for maintenance fee notifications.

CURRENT CORRESPONDENCE ADDRESS (Note: Use Block 1 for any change of address)

50704 7590 10/17/2006

MICHAEL DANY
87 HIGH VIEW DRIVE
WADING RIVER, NY 11792

Note: A certificate of mailing can only be used for domestic mailings of the Fee(s) Transmittal. This certificate cannot be used for any other accompanying papers. Each additional paper, such as an assignment or formal drawing, must have its own certificate of mailing or transmission.

Certificate of Mailing or Transmission

I hereby certify that this Fee(s) Transmittal is being deposited with the United States Postal Service with sufficient postage for first class mail in an envelope addressed to the Mail Stop ISSUE FEE address above, or being facsimile transmitted to the USPTO (571) 273-2885, on the date indicated below.

(Depositor's name)
(Signature)
(Date)

APPLICATION NO.	FILING DATE	FIRST NAMED INVENTOR	ATTORNEY DOCKET NO.	CONFIRMATION NO.
11/415,686	05/02/2006	Gloria L. Holland	50704	5151

TITLE OF INVENTION: TARGET BUILT INTO A TOILET OR URINAL

APPLN. TYPE	SMALL ENTITY	ISSUE FEE DUE	PUBLICATION FEE DUE	PREV. PAID ISSUE FEE	TOTAL FEE(S) DUE	DATE DUE
nonprovisional	YES	$700	$300	$0	$1000	01/17/2007

EXAMINER	ART UNIT	CLASS-SUBCLASS
LE, HUYEN D	3751	004-661000

1. Change of correspondence address or indication of "Fee Address" (37 CFR 1.363).
- ☐ Change of correspondence address (or Change of Correspondence Address form PTO/SB/122) attached.
- ☐ "Fee Address" indication (or "Fee Address" Indication form PTO/SB/47; Rev 03-02 or more recent) attached. **Use of a Customer Number is required.**

2. For printing on the patent front page, list
(1) the names of up to 3 registered patent attorneys or agents OR, alternatively,
(2) the name of a single firm (having as a member a registered attorney or agent) and the names of up to 2 registered patent attorneys or agents. If no name is listed, no name will be printed.

1 _____
2 _____
3 _____

3. ASSIGNEE NAME AND RESIDENCE DATA TO BE PRINTED ON THE PATENT (print or type)

PLEASE NOTE: Unless an assignee is identified below, no assignee data will appear on the patent. If an assignee is identified below, the document has been filed for recordation as set forth in 37 CFR 3.11. Completion of this form is NOT a substitute for filing an assignment.

(A) NAME OF ASSIGNEE (B) RESIDENCE: (CITY and STATE OR COUNTRY)

Please check the appropriate assignee category or categories (will not be printed on the patent): ☐ Individual ☐ Corporation or other private group entity ☐ Government

4a. The following fee(s) are submitted:
- ☐ Issue Fee
- ☐ Publication Fee (No small entity discount permitted)
- ☐ Advance Order - # of Copies _____

4b. Payment of Fee(s): **(Please first reapply any previously paid issue fee shown above)**
- ☐ A check is enclosed.
- ☐ Payment by credit card. Form PTO-2038 is attached.
- ☐ The Director is hereby authorized to charge the required fee(s), any deficiency, or credit any overpayment, to Deposit Account Number _____ (enclose an extra copy of this form).

5. **Change in Entity Status** (from status indicated above)
- ☐ a. Applicant claims SMALL ENTITY status. See 37 CFR 1.27.
- ☐ b. Applicant is no longer claiming SMALL ENTITY status. See 37 CFR 1.27(g)(2).

NOTE: The Issue Fee and Publication Fee (if required) will not be accepted from anyone other than the applicant; a registered attorney or agent; or the assignee or other party in interest as shown by the records of the United States Patent and Trademark Office.

Authorized Signature _____ Date _____

Typed or printed name _____ Registration No. _____

This collection of information is required by 37 CFR 1.311. The information is required to obtain or retain a benefit by the public which is to file (and by the USPTO to process) an application. Confidentiality is governed by 35 U.S.C. 122 and 37 CFR 1.14. This collection is estimated to take 12 minutes to complete, including gathering, preparing, and submitting the completed application form to the USPTO. Time will vary depending upon the individual case. Any comments on the amount of time you require to complete this form and/or suggestions for reducing this burden, should be sent to the Chief Information Officer, U.S. Patent and Trademark Office, U.S. Department of Commerce, P.O. Box 1450, Alexandria, Virginia 22313-1450. DO NOT SEND FEES OR COMPLETED FORMS TO THIS ADDRESS. SEND TO: Commissioner for Patents, P.O. Box 1450, Alexandria, Virginia 22313-1450.

Under the Paperwork Reduction Act of 1995, no persons are required to respond to a collection of information unless it displays a valid OMB control number.

UNITED STATES PATENT AND TRADEMARK OFFICE

UNITED STATES DEPARTMENT OF COMMERCE
United States Patent and Trademark Office
Address: COMMISSIONER FOR PATENTS
P.O. Box 1450
Alexandria, Virginia 22313-1450
www.uspto.gov

APPLICATION NO.	FILING DATE	FIRST NAMED INVENTOR	ATTORNEY DOCKET NO.	CONFIRMATION NO.
11/415,686	05/02/2006	Gloria L. Holland	50704	5151

50704 7590 10/17/2006

MICHAEL DANY
87 HIGH VIEW DRIVE
WADING RIVER, NY 11792

EXAMINER
LE, HUYEN D

ART UNIT	PAPER NUMBER
3751	

DATE MAILED: 10/17/2006

Determination of Patent Term Adjustment under 35 U.S.C. 154 (b)
(application filed on or after May 29, 2000)

The Patent Term Adjustment to date is 0 day(s). If the issue fee is paid on the date that is three months after the mailing date of this notice and the patent issues on the Tuesday before the date that is 28 weeks (six and a half months) after the mailing date of this notice, the Patent Term Adjustment will be 0 day(s).

If a Continued Prosecution Application (CPA) was filed in the above-identified application, the filing date that determines Patent Term Adjustment is the filing date of the most recent CPA.

Applicant will be able to obtain more detailed information by accessing the Patent Application Information Retrieval (PAIR) WEB site (http://pair.uspto.gov).

Any questions regarding the Patent Term Extension or Adjustment determination should be directed to the Office of Patent Legal Administration at (571)-272-7702. Questions relating to issue and publication fee payments should be directed to the Customer Service Center of the Office of Patent Publication at 1-(888)-786-0101 or (571)-272-4200.

PTOL-85 (Rev. 07/06) Approved for use through 04/30/2007.

Notice of Allowability	Application No.	Applicant(s)
	11/415,686	HOLLAND, GLORIA L.
	Examiner	Art Unit
	Huyen Le	3751

-- The MAILING DATE of this communication appears on the cover sheet with the correspondence address--

All claims being allowable, PROSECUTION ON THE MERITS IS (OR REMAINS) CLOSED in this application. If not included herewith (or previously mailed), a Notice of Allowance (PTOL-85) or other appropriate communication will be mailed in due course. **THIS NOTICE OF ALLOWABILITY IS NOT A GRANT OF PATENT RIGHTS.** This application is subject to withdrawal from issue at the initiative of the Office or upon petition by the applicant. See 37 CFR 1.313 and MPEP 1308.

1. ☒ This communication is responsive to *05/02/2006*.

2. ☒ The allowed claim(s) is/are *1 and 2*.

3. ☐ Acknowledgment is made of a claim for foreign priority under 35 U.S.C. § 119(a)-(d) or (f).
   a) ☐ All b) ☐ Some* c) ☐ None of the:
      1. ☐ Certified copies of the priority documents have been received.
      2. ☐ Certified copies of the priority documents have been received in Application No. _____ .
      3. ☐ Copies of the certified copies of the priority documents have been received in this national stage application from the International Bureau (PCT Rule 17.2(a)).

   * Certified copies not received: _____.

Applicant has THREE MONTHS FROM THE "MAILING DATE" of this communication to file a reply complying with the requirements noted below. Failure to timely comply will result in ABANDONMENT of this application.
THIS THREE-MONTH PERIOD IS NOT EXTENDABLE.

4. ☐ A SUBSTITUTE OATH OR DECLARATION must be submitted. Note the attached EXAMINER'S AMENDMENT or NOTICE OF INFORMAL PATENT APPLICATION (PTO-152) which gives reason(s) why the oath or declaration is deficient.

5. ☐ CORRECTED DRAWINGS (as "replacement sheets") must be submitted.
   (a) ☐ including changes required by the Notice of Draftsperson's Patent Drawing Review (PTO-948) attached
      1) ☐ hereto or 2) ☐ to Paper No./Mail Date _____.
   (b) ☐ including changes required by the attached Examiner's Amendment / Comment or in the Office action of Paper No./Mail Date _____.

   Identifying indicia such as the application number (see 37 CFR 1.84(c)) should be written on the drawings in the front (not the back) of each sheet. Replacement sheet(s) should be labeled as such in the header according to 37 CFR 1.121(d).

6. ☐ DEPOSIT OF and/or INFORMATION about the deposit of BIOLOGICAL MATERIAL must be submitted. Note the attached Examiner's comment regarding REQUIREMENT FOR THE DEPOSIT OF BIOLOGICAL MATERIAL.

Attachment(s)

1. ☒ Notice of References Cited (PTO-892)
2. ☐ Notice of Draftperson's Patent Drawing Review (PTO-948)
3. ☐ Information Disclosure Statements (PTO/SB/08), Paper No./Mail Date _____
4. ☐ Examiner's Comment Regarding Requirement for Deposit of Biological Material
5. ☐ Notice of Informal Patent Application
6. ☐ Interview Summary (PTO-413), Paper No./Mail Date _____ .
7. ☐ Examiner's Amendment/Comment
8. ☒ Examiner's Statement of Reasons for Allowance
9. ☐ Other _____.

REASONS FOR ALLOWANCE

1. The following is an examiner's statement of reasons for allowance: none of the prior art of record alone or in combination teaches a toilet bowl or urinal in the combination comprising: a target means to attract the attention of urinating human males to be permanently manufactured into the toilet or urinal; the target means being sprayed onto the porcelain during manufacturing after the clay is fired and prior to the final firing; and the target not being exposed to the outside of the toilet or urinal finished glazing.

Any comments considered necessary by applicant must be submitted no later than the payment of the issue fee and, to avoid processing delays, should preferably accompany the issue fee. Such submissions should be clearly labeled "Comments on Statement of Reasons for Allowance."

2. Any inquiry concerning this communication or earlier communications from the examiner should be directed to Huyen Le whose telephone number is 571-272-4890. The examiner can normally be reached on Monday-Friday from 9:00 am to 5:00 pm.

If attempts to reach the examiner by telephone are unsuccessful, the examiner's supervisor, Justine Yu can be reached on 571-272-4835. The fax phone number for the organization where this application or proceeding is assigned is 571-273-8300.

Information regarding the status of an application may be obtained from the Patent Application Information Retrieval (PAIR) system. Status information for published applications may be obtained from either Private PAIR or Public PAIR. Status information for unpublished applications is available through Private PAIR only. For more information about the PAIR system, see http://pair-direct.uspto.gov. Should you have questions on access to the Private PAIR system, contact the Electronic Business Center (EBC) at 866-217-9197 (toll-free). If you would like assistance from a USPTO Customer Service Representative or access to the automated information system, call 800-786-9199 (IN USA OR CANADA) or 571-272-1000.

Huyen Le
Huyen Le
Examiner
Art Unit 3751

HL

PART B - FEE(S) TRANSMITTAL

Complete and send this form, together with applicable fee(s), to: Mail **Mail Stop ISSUE FEE**
Commissioner for Patents
P.O. Box 1450
Alexandria, Virginia 22313-1450
or Fax (571) 273-2885

INSTRUCTIONS: This form should be used for transmitting the ISSUE FEE and PUBLICATION FEE (if required). Blocks 1 through 5 should be completed where appropriate. All further correspondence including the Patent, advance orders and notification of maintenance fees will be mailed to the current correspondence address as indicated unless corrected below or directed otherwise in Block 1, by (a) specifying a new correspondence address; and/or (b) indicating a separate "FEE ADDRESS" for maintenance fee notifications.

CURRENT CORRESPONDENCE ADDRESS (Note: Use Block 1 for any change of address)

Note: A certificate of mailing can only be used for domestic mailings of the Fee(s) Transmittal. This certificate cannot be used for any other accompanying papers. Each additional paper, such as an assignment or formal drawing, must have its own certificate of mailing or transmission.

Certificate of Mailing or Transmission

I hereby certify that this Fee(s) Transmittal is being deposited with the United States Postal Service with sufficient postage for first class mail in an envelope addressed to the Mail Stop ISSUE FEE address above, or being facsimile transmitted to the USPTO (571) 273-2885, on the date indicated below.

(Depositor's name)

(Signature)

(Date)

APPLICATION NO.	FILING DATE	FIRST NAMED INVENTOR	ATTORNEY DOCKET NO.	CONFIRMATION NO.

TITLE OF INVENTION:

APPLN. TYPE	SMALL ENTITY	ISSUE FEE	PUBLICATION FEE	TOTAL FEE(S) DUE	DATE DUE

EXAMINER	ART UNIT	CLASS-SUBCLASS

1. Change of correspondence address or indication of "Fee Address" (37 CFR 1.363).

☐ Change of correspondence address (or Change of Correspondence Address form PTO/SB/122) attached.

☐ "Fee Address" indication (or "Fee Address" Indication form PTO/SB/47; Rev 03-02 or more recent) attached. **Use of a Customer Number is required.**

2. For printing on the patent front page, list

(1) the names of up to 3 registered patent attorneys or agents OR, alternatively,

(2) the name of a single firm (having as a member a registered attorney or agent) and the names of up to 2 registered patent attorneys or agents. If no name is listed, no name will be printed.

1 _____

2 _____

3 _____

3. ASSIGNEE NAME AND RESIDENCE DATA TO BE PRINTED ON THE PATENT (print or type)

PLEASE NOTE: Unless an assignee is identified below, no assignee data will appear on the patent. If an assignee is identified below, the document has been filed for recordation as set forth in 37 CFR 3.11. Completion of this form is NOT a substitute for filing an assignment.

(A) NAME OF ASSIGNEE

(B) RESIDENCE: (CITY and STATE OR COUNTRY)

Please check the appropriate assignee category or categories (will not be printed on the patent) : ☐ Individual ☐ Corporation or other private group entity ☐ Government

4a. The following fee(s) are enclosed:

☐ Issue Fee

☐ Publication Fee (No small entity discount permitted)

☐ Advance Order - # of Copies _____

4b. Payment of Fee(s):

☐ A check in the amount of the fee(s) is enclosed.

☐ Payment by credit card. Form PTO-2038 is attached.

☐ The Director is hereby authorized by charge the required fee(s), or credit any overpayment, to Deposit Account Number _____ (enclose an extra copy of this form).

5. **Change in Entity Status** (from status indicated above)

☐ a. Applicant claims SMALL ENTITY status. See 37 CFR 1.27.

☐ b. Applicant is no longer claiming SMALL ENTITY status. See 37 CFR 1.27(g)(2).

The Director of the USPTO is requested to apply the Issue Fee and Publication Fee (if any) or to re-apply any previously paid issue fee to the application identified above.
NOTE: The Issue Fee and Publication Fee (if required) will not be accepted from anyone other than the applicant; a registered attorney or agent; or the assignee or other party in interest as shown by the records of the United States Patent and Trademark Office.

Authorized Signature _____ Date _____

Typed or printed name _____ Registration No. _____

This collection of information is required by 37 CFR 1.311. The information is required to obtain or retain a benefit by the public which is to file (and by the USPTO to process) an application. Confidentiality is governed by 35 U.S.C. 122 and 37 CFR 1.14. This collection is estimated to take 12 minutes to complete, including gathering, preparing, and submitting the completed application form to the USPTO. Time will vary depending upon the individual case. Any comments on the amount of time you require to complete this form and/or suggestions for reducing this burden, should be sent to the Chief Information Officer, U.S. Patent and Trademark Office, U.S. Department of Commerce, P.O. Box 1450, Alexandria, Virginia 22313-1450. DO NOT SEND FEES OR COMPLETED FORMS TO THIS ADDRESS. SEND TO: Commissioner for Patents, P.O. Box 1450, Alexandria, Virginia 22313-1450.

Under the Paperwork Reduction Act of 1995, no persons are required to respond to a collection of information unless it displays a valid OMB control number.

UNITED STATES PATENT AND TRADEMARK OFFICE

Commissioner for Patents
United States Patent and Trademark Office
P.O. Box 1450
Alexandria, VA 22313-1450
www.uspto.gov

WILLIAMS G. SYKES
3669 SEAGULL BLUFF DRIVE
VIRGINIA BEACH, VA 23455

COPY MAILED

APR 1 8 2008

OFFICE OF PETITIONS

In re Application of :
Gloria L. Holland :
Application No. 11/415,686 :
Filed: May 2, 2006 :
Attorney Docket No. 50704 :

ON PETITION

This is a decision on the renewed petition under 37 CFR 1.137(b), filed on January 18, 2008, to revive the above-identified application.

The petition satisfies the requirements of 37 CFR 1.137(b), in that, petitioner has supplied (1) the reply in the form of $720 for payment of the issue fee and $300 for payment of the publication fee; (2) the petition fee of $750; and (3) a proper statement of unintentional delay. Therefore, the petition is **GRANTED**.

This application file is being referred to the Office of Data Management to be processed into a patent.

Telephone inquiries concerning this decision should be directed to the undersigned at (571) 272-3226.

Andrea Smith
Petitions Examiner
Office of Petitions

UNITED STATES PATENT AND TRADEMARK OFFICE

UNITED STATES DEPARTMENT OF COMMERCE
United States Patent and Trademark Office
Address: COMMISSIONER FOR PATENTS
P.O. Box 1450
Alexandria, Virginia 22313-1450
www.uspto.gov

HONEYWELL/UOP
PATENT SERVICES
101 COLUMBIA DRIVE
P O BOX 2245 MAIL STOP AB/2B
MORRISTOWN, NJ 07962

Mail Date: 04/20/2010

Applicant	: Robert J. Schmidt	: DECISION ON REQUEST FOR
Patent Number	: 7652181	: RECALCULATION of PATENT
Issue Date	: 01/26/2010	: TERM ADJUSTMENT IN VIEW
Appliction No	: 11/415,700	: OF WYETH AND NOTICE OF INTENT TO
Filed	: 05/02/2006	: ISSUE CERTIFICATE OF CORRECTION
		:

The Request for Recalculation is **GRANTED** to the extent indicated.

The patent term adjustment has been determined to be **134** days. The USPTO will *sua sponte* issue a certificate of correction reflecting the amount of PTA days determined by the recalculation.

Prior to the issuance of the certificate of correction, the USPTO will afford patentee an opportunity to be heard and request reconsideration. Accordingly, patentee has **one month or thirty (30) days**, whichever is longer, to file a request for reconsideration of this patent term adjustment calculation. See 35 U.S.C. 154(b)(3)(B)(ii) and 37 CFR 1.322(a)(4). No extensions of time will be granted under 37 CFR 1.136.

Patentee should use document code PET.OP if electronically filing a request for reconsideration of this patent term adjustment calculation. The patentee must also include the information required by 37 CFR 1.705(b)(2) and the fee required by 37 CFR 1.18(e). If patentee does not file a timely request for reconsideration of this patent term adjustment calculation including the information required by 37 CFR 1.705(b)(2) and the fee required by 37 CFR 1.18(e), the USPTO will issue a certificate of correction reflecting the PTA determination noted above.

Patentee should be aware that in order to preserve the right to review in the United States District Court for the District of Columbia of the USPTO patent term adjustment determination, patentee must ensure that he or she also take the steps required under 35 U.S.C. 154(b)(4)(A) in a timely manner. Nothing in the request for recalculation should be construed as providing an alternative time frame for commencing a civil action under 35 U.S.C. 154(b)(4)(A).

Any questions concerning this decision should be directed to the Office of Patent Legal Administration at 571-272-7702.

UNITED STATES PATENT AND TRADEMARK OFFICE

Commissioner for Patents
United States Patent and Trademark Office
P.O. Box 1450
Alexandria, VA 22313-1450
www.uspto.gov

THE PROCTER & GAMBLE COMPANY
GLOBAL LEGAL DEPARTMENT - IP
SYCAMORE BUILDING - 4TH FLOOR
299 EAST SIXTH STREET
CINCINNATI, OH 45202

MAILED

MAR 19 2010

OFFICE OF PETITIONS

In re Application of :
Adam Matthew Warren, et al. :
Application No.: 11/415,709 : ON PETITION
Filed: May 1, 2006 :
Attorney Docket No.: 10393Q :

This is a decision on the petition, filed March 18, 2010, under 37 CFR 1.313(c)(2) to withdraw the above-identified application from issue after payment of the issue fee.

The petition is **GRANTED**.

The above-identified application is withdrawn from issue for consideration of a submission under 37 CFR 1.114 (request for continued examination). See 37 CFR 1.313(c)(2).

Petitioner is advised that the issue fee paid on March 5, 2010, cannot be refunded. If, however, this application is again allowed, petitioner may request that it be applied towards the issue fee required by the new Notice of Allowance.[1]

Telephone inquiries relating to this decision should be directed to the undersigned at (571) 272-3204.

The application is being referred to Technology Center AU 3728 for further processing of the request for continued examination under 37 CFR 1.114 and for consideration of the concurrently filed Information Disclosure Statement (IDS).

/SDB/

Sherry D. Brinkley
Petitions Examiner
Office of Petitions

[1] *The request to apply the issue fee to the new Notice may be satisfied by completing and returning the new Part B – Fee(s) Transmittal Form (along with any balance due at the time of submission). Petitioner is advised that the Issue Fee Transmittal Form must be completed and timely submitted to avoid abandonment of the application.*

UNITED STATES PATENT AND TRADEMARK OFFICE

UNITED STATES DEPARTMENT OF COMMERCE
United States Patent and Trademark Office
Address: COMMISSIONER FOR PATENTS
P.O. Box 1450
Alexandria, Virginia 22313-1450
www.uspto.gov

MILLS & ONELLO LLP
ELEVEN BEACON STREET
SUITE 605
BOSTON, MA 02108

Mail Date: 04/21/2010

Applicant	: Young-Jin Chung	: DECISION ON REQUEST FOR
Patent Number	: 7580042	: RECALCULATION of PATENT
Issue Date	: 08/25/2009	: TERM ADJUSTMENT IN VIEW
Appliction No	: 11/415,721	: OF WYETH AND NOTICE OF INTENT TO
Filed	: 05/02/2006	: ISSUE CERTIFICATE OF CORRECTION
		:

The Request for Recalculation is **GRANTED** to the extent indicated.

The patent term adjustment has been determined to be **593** days. The USPTO will *sua sponte* issue a certificate of correction reflecting the amount of PTA days determined by the recalculation.

Prior to the issuance of the certificate of correction, the USPTO will afford patentee an opportunity to be heard and request reconsideration. Accordingly, patentee has **one month or thirty (30) days**, whichever is longer, to file a request for reconsideration of this patent term adjustment calculation. See 35 U.S.C. 154(b)(3)(B)(ii) and 37 CFR 1.322(a)(4). No extensions of time will be granted under 37 CFR 1.136.

Patentee should use document code PET.OP if electronically filing a request for reconsideration of this patent term adjustment calculation. The patentee must also include the information required by 37 CFR 1.705(b)(2) and the fee required by 37 CFR 1.18(e). If patentee does not file a timely request for reconsideration of this patent term adjustment calculation including the information required by 37 CFR 1.705(b)(2) and the fee required by 37 CFR 1.18(e), the USPTO will issue a certificate of correction reflecting the PTA determination noted above.

Patentee should be aware that in order to preserve the right to review in the United States District Court for the District of Columbia of the USPTO patent term adjustment determination, patentee must ensure that he or she also take the steps required under 35 U.S.C. 154(b)(4)(A) in a timely manner. Nothing in the request for recalculation should be construed as providing an alternative time frame for commencing a civil action under 35 U.S.C. 154(b)(4)(A).

Any questions concerning this decision should be directed to the Office of Patent Legal Administration at 571-272-7702.

UNITED STATES PATENT AND TRADEMARK OFFICE

Commissioner for Patents
United States Patent and Trademark Office
P.O. Box 1450
Alexandria, VA 22313-1450
www.uspto.gov

ALFRED M. WALKER
225 OLD COUNTRY ROAD
MELVILLE, NY 11747-2712

COPY MAILED

AUG 3 1 2006

OFFICE OF PETITIONS

In re Application of	:	
Thomas J. Cataldo	:	
Application No. 11/415,735	:	DECISION ON PETITION
Filed: May 1, 2006	:	TO MAKE SPECIAL UNDER
Attorney Docket No. 250318-Cataldo-STAP	:	37 CFR 1.102(c)(1)
	:	

This is a decision on the petition under 37 CFR 1.102(c)(1), filed May 1, 2006, to make the above-identified application special based on applicant's age as set forth in M.P.E.P. § 708.02, Section IV.

The petition is **GRANTED**.

A grantable petition to make an application special under 37 CFR 1.102(c)(1) and MPEP § 708.02, Section IV: Applicant's Age must be accompanied by evidence showing that at least one of the applicants is 65 years of age, or more, such as a birth certificate or a statement by applicant. No fee is required

The instant petition includes a statement from Inventor Thomas J. Cataldo, also known as Ottovio Cataldo stating that he is over 65 years of age. Accordingly, the above-identified application has been accorded "special" status.

Telephone inquiries concerning this decision should be directed to Irvin Dingle at 571-272-3210.

All other inquiries concerning either the examination or status of the application should be directed to the Technology Center.

The application is being forwarded to the Technology Center Art Unit 3662 for action on the merits commensurate with this decision.

Irvin Dingle
Petitions Examiner
Office of Petitions

UNITED STATES PATENT AND TRADEMARK OFFICE

UNITED STATES DEPARTMENT OF COMMERCE
United States Patent and Trademark Office
Address: COMMISSIONER FOR PATENTS
P.O. Box 1450
Alexandria, Virginia 22313-1450
www.uspto.gov

BRINKS HOFER GILSON & LIONE
P.O. BOX 10395
CHICAGO, IL 60610

Mail Date: 04/21/2010

Applicant	: Seong Gyun Kim	: DECISION ON REQUEST FOR
Patent Number	: 7609244	: RECALCULATION of PATENT
Issue Date	: 10/27/2009	: TERM ADJUSTMENT IN VIEW
Appliction No	: 11/415,747	: OF WYETH AND NOTICE OF INTENT TO
Filed	: 05/02/2006	: ISSUE CERTIFICATE OF CORRECTION
		:

The Request for Recalculation is **GRANTED** to the extent indicated.

The patent term adjustment has been determined to be **682** days. The USPTO will *sua sponte* issue a certificate of correction reflecting the amount of PTA days determined by the recalculation.

Prior to the issuance of the certificate of correction, the USPTO will afford patentee an opportunity to be heard and request reconsideration. Accordingly, patentee has **one month or thirty (30) days**, whichever is longer, to file a request for reconsideration of this patent term adjustment calculation. See 35 U.S.C. 154(b)(3)(B)(ii) and 37 CFR 1.322(a)(4). No extensions of time will be granted under 37 CFR 1.136.

Patentee should use document code PET.OP if electronically filing a request for reconsideration of this patent term adjustment calculation. The patentee must also include the information required by 37 CFR 1.705(b)(2) and the fee required by 37 CFR 1.18(e). If patentee does not file a timely request for reconsideration of this patent term adjustment calculation including the information required by 37 CFR 1.705(b)(2) and the fee required by 37 CFR 1.18(e), the USPTO will issue a certificate of correction reflecting the PTA determination noted above.

Patentee should be aware that in order to preserve the right to review in the United States District Court for the District of Columbia of the USPTO patent term adjustment determination, patentee must ensure that he or she also take the steps required under 35 U.S.C. 154(b)(4)(A) in a timely manner. Nothing in the request for recalculation should be construed as providing an alternative time frame for commencing a civil action under 35 U.S.C. 154(b)(4)(A).

Any questions concerning this decision should be directed to the Office of Patent Legal Administration at 571-272-7702.

UNITED STATES PATENT AND TRADEMARK OFFICE

Commissioner for Patents
United States Patent and Trademark Office
P.O. Box 1450
Alexandria, VA 22313-1450
www.uspto.gov

LEVINE BAGADE HAN LLP
2483 EAST BAYSHORE ROAD
SUITE 100
PALO ALTO, CA 94303

COPY MAILED

APR 0 2 2007

OFFICE OF PETITIONS

In re Application of :
KRISHNAMOORTHY, Jayaprakash :
Application No. 11/415,759 : DECISION ON PETITION
Filed: May 01, 2006 : TO WITHDRAW
Attorney Docket No. **PORTNZ00500** : FROM RECORD

This is a decision on the Request to Withdraw as attorney or agent of record under 37 C.F.R. § 1.36(b), filed October 05, 2006.

The request is **NOT APPROVED** as moot.

A review of the file record indicates that the power of attorney to Levine Bagade Han LLP has been revoked by the assignee of the patent application on January 05, 2007. Accordingly, the request to withdraw under 37 C.F.R. § 1.36(b) is moot.

All future communications from the Office will be directed to the below-listed address until otherwise notified by applicant.

Telephone inquires concerning this decision should be directed to Tredelle Jackson at 571-272- 2783.

Monica A. Graves
Petitions Examiner
Office of Petitions

cc: **TOWNSEND AND TOWNSEND AND CREW LLP**
TWO EMBARCADERO CENTER
8TH FLOOR
SAN FRANCISCO CA 94111-3834

UNITED STATES PATENT AND TRADEMARK OFFICE

Commissioner for Patents
United States Patent and Trademark Office
P.O. Box 1450
Alexandria, VA 22313-1450
www.uspto.gov

MCCARTER & ENGLISH, LLP STAMFORD OFFICE
FINANCIAL CENTRE, SUITE 304A
695 EAST MAIN STREET
STAMFORD CT 06901-2138

COPY MAILED

NOV 27 2007

OFFICE OF PETITIONS

In re Application of
Michele Ferrari et al
Application No. 11/415,761
Filed: May 2, 2006
Attorney Docket No. 99759.00015

DECISION ON PETITION

This is a decision on the petition under the unintentional provisions of 37 CFR 1.137(b), filed October 5, 2007, to revive the above-identified application.

The petition is **DISMISSED**.

Any request for reconsideration of this decision must be submitted within TWO (2) MONTHS from the mail date of this decision. Extensions of time under 37 CFR 1.136(a) are permitted. The reconsideration request should include a cover letter entitled "Renewed Petition under 37 CFR 1.137(b)." This is **not** a final agency action within the meaning of 5 U.S.C. § 704.

This application became abandoned for failure to timely pay the issue and publication fees on or before August 15, 2007, as required by the Notice of Allowance and Fee(s) Due mailed May 15, 2007. A Notice of Abandonment was mailed on September 14, 2007.

A grantable petition under 37 CFR 1.137(b) must be accompanied by: (1) the required reply, unless previously filed; (2) the petition fee as set forth in 37 CFR 1.17(m); (3) a statement that the entire delay in filing the required reply from the due date for the reply until the filing of a grantable petition pursuant to 37 CFR 1.137(b) was unintentional; and (4) any terminal disclaimer (and fee as set forth in 37 CFR 1.20(d)) required by 37 CFR 1.137(d). Where there is a question as to whether either the abandonment or the delay in filing a petition under 37 CFR 1.137 was unintentional, the Director may require additional information. *See* MPEP 711.03(c)(II)(C) and (D).

The instant petition lacks item (3) above. In this regard, the statement of unintentional delay is not signed. Accordingly, before revival of this application can be effected, a properly executed statement of unintentional delay must be submitted, which should be made by way of a renewed petition under 37 CFR 1.137(b). No additional petition fee is required.

Further correspondence with respect to this matter should be addressed as follows:

By Mail: Mail Stop PETITION
Commissioner for Patents
P. O. Box 1450
Alexandria, VA 22313-1450

By hand: U. S. Patent and Trademark Office
Customer Service Window, Mail Stop Petitions
Randolph Building
401 Dulany Street
Alexandria, VA 22314

The centralized facsimile number is **(571) 273-8300.**

Correspondence regarding this decision may also be filed through the electronic filing system of the USPTO.

To expedite consideration, petitioner may wish to contact the undersigned regarding the filing of the renewed petition under 37 CFR 1.137(b).

Telephone inquiries concerning this decision should be directed to the undersigned at (571) 272-3218.

Frances Hicks
Petitions Examiner
Office of Petitions

UNITED STATES PATENT AND TRADEMARK OFFICE

Commissioner for Patents
United States Patent and Trademark Office
P.O. Box 1450
Alexandria, VA 22313-1450
www.uspto.gov

MCCARTER & ENGLISH , LLP STAMFORD OFFICE
FINANCIAL CENTRE , SUITE 304A
695 EAST MAIN STREET
STAMFORD CT 06901-2138

COPY MAILED

JAN 1 1 2008

OFFICE OF PETITIONS

In re Application of	:	
Michele Ferrari et al.	:	
Application No. 11/415,761	:	ON PETITION
Filed: May 2, 2006	:	
Attorney Docket No. 99759.00015	:	

This is a decision on the renewed petition under 37 CFR 1.137(b), filed December 5, 2007, to revive the above-identified application.

The petition is **GRANTED**.

The above-identified application became abandoned for failure to timely pay the issue fee in response to the Notice of Allowance mailed May 15, 2007, which set a statutory period for reply of three (3) months. Accordingly, by operation of law, the above-identified application became abandoned on August 16, 2007.

The petition decision mailed August 28, 2007 indicates the petition under 37 CFR 1.137(b) filed October 5, 2007 was dismissed as failing to provide the required proper statement that the abandonment was unintentional. The petition was unsigned, therefore the statement was not acceptable.

The renewed petition satisfies the conditions for revival pursuant to the provisions of 37 CFR 1.137(b) in that (3) a signed statement of unintentional delay has been received. Accordingly, the issue fee is accepted as having been unintentionally delayed.

Telephone inquiries concerning this decision should be directed to Carl Friedman at (571) 272-6842.

The application file is being referred to the Office of Patent Publication..

David Bucci
Petitions Examiner
Office of Petitions

UNITED STATES PATENT AND TRADEMARK OFFICE

Commissioner for Patents
United States Patent and Trademark Office
P.O. Box 1450
Alexandria, VA 22313-1450
www.uspto.gov

KNOBBE MARTENS OLSON & BEAR LLP
2040 MAIN STREET
FOURTEENTH FLOOR
IRVINE CA 92614

COPY MAILED

NOV 0 1 2006

OFFICE OF PETITIONS

In re Application of

KATES
Application No. 11/415,767
Filed: May 02, 2006
Attorney Docket No. KATES.018DV1

DECISION ON PETITION
TO MAKE SPECIAL UNDER
37 CFR 1.102(c)(1)

This is a decision on the petition under 37 CFR 1.102(c)(1), filed September 29, 2006, to make the above-identified application special based on applicant's age as set forth in M.P.E.P. § 708.02, Section IV.

The petition is **GRANTED**.

A grantable petition to make an application special under 37 CFR 1.102(c)(1) and MPEP § 708.02, Section IV: Applicant's Age, must be accompanied by evidence showing that at least one of the applicants is 65 years of age, or more, such as a birth certificate or a statement by applicant. No fee is required.

The evidence submitted with the instant petition is a declaration signed by Mr. Kates indicating that he is at least 65 years of age. Accordingly, the above-identified application has been accorded "special" status.

Telephone inquiries concerning this decision should be directed to Patricia Volpe at 571-272-6825.

All other inquiries concerning either the examination or status of the application should be directed to the Technology Center.

The application is being forwarded to the Technology Center Art Unit 2612 for action on the merits commensurate with this decision.

PAVolpe for

David Bucci
Petitions Examiner
Office of Petitions

UNITED STATES PATENT AND TRADEMARK OFFICE

Commissioner for Patents
United States Patent and Trademark Office
P.O. Box 1450
Alexandria, VA 22313-1450
www.uspto.gov

KNOBBE MARTENS OLSON & BEAR LLP
2040 MAIN STREET
FOURTEENTH FLOOR
IRVINE CA 92614

COPY MAILED
DEC 21 2006
OFFICE OF PETITIONS

In re Application of	:	
Bloom et al.	:	DECISION ON PETITION
Application No. 11/415,798	:	TO MAKE SPECIAL
Filed: May 1, 2006	:	37 CFR 1.102(D)
Attorney Docket No. WESTERN.006C6	:	

This is a decision on the petition under 37 CFR 1.102(c) (2)(ii), filed May 1, 2006, to make the above-identified application special based on the invention materially contributing to the development or conservation of energy resources as set forth in M.P.E.P. § 708.02, Section VI.

The petition is **DISMISSED**.

A grantable petition to make an application special under 37 CFR 1.102(c)(ii) and MPEP § 708.02, Section VI: Energy, must state how the invention materially contributes to (A) the discovery or development of energy resources, or (b) the more efficient utilization and conservation of energy resources. If the disclosure is not clear on its face that the claimed invention materially contributes category (A) or (B), the petition must be accompanied by a statement by the applicant, assignee, or an attorney/agent registered to practice before the Office explaining how the materiality standard is met. Examples of inventions in category (A) would be developments in fossil fuels (natural gas, coal, and petroleum), hydrogen fuel technologies, nuclear energy, solar energy, etc. Category (B) would include inventions relating to the reduction of energy consumption in combustion systems, industrial equipment, household appliances, etc. No fee is required.

The petition states, "The claimed embodiments include gripper assemblies that provide significant advantages over grippers of prior art tractors." This statement lacks any specifics about how the claimed invention materially contributes to item (A), above, and fails to establish for the record that the invention "materially contributes to the discovery and development of energy resources."

Further correspondence with respect to this matter should be addressed as follows:

By Mail: Mail Stop PETITION
Commissioner for Patents
P. O. Box 1450
Alexandria, VA 22313-1450

By hand: U. S. Patent and Trademark Office
Customer Service Window, Mail Stop Petitions
Randolph Building
401 Dulany Street
Alexandria, VA 22314

By FAX: (571) 273-8300

Telephone inquiries concerning this decision should be directed to Petitions Examiner Liana Walsh at 571-272-3206. All other inquiries concerning either the examination or status of the application should be directed to the Technology Center.

This matter is being referred to Technology Center Art Unit 3672 for action in its regular turn.

David Bucci
Petitions Examiner
Office of Petitions

UNITED STATES PATENT AND TRADEMARK OFFICE

COMMISSIONER FOR PATENTS
UNITED STATES PATENT AND TRADEMARK OFFICE
P.O. BOX 1450
ALEXANDRIA, VA 22313-1450
www.uspto.gov

THOMAS F. LENIHAN
TEKTRONIX, INC.
14150 S. W. KARL BRAUN DRIVE
P.O. BOX 500 (50-LAW)
BEAVERTON OR 97077-0001

MAILED

JUN 21 2010

OFFICE OF PETITIONS

In re Application of :
John CALVIN et al. :
Application No. 11/415,800 :
Filed: May 1, 2006 :
Attorney Docket No. 8006-US1 :

ON PETITION

This is a decision on the petition under 37 CFR 1.137(b), filed March 9, 2010, to revive the above-identified application.

The petition is **GRANTED**.

The above-identified application became abandoned for failure to reply in a timely manner to the final Office action mailed September 3, 2009, which set a shortened statutory period for reply of three (3) months. No extensions of time under the provisions of 37 CFR 1.136(a) were obtained. Accordingly, the above-identified application became abandoned on December 4, 2009.

The petition satisfies the conditions for revival pursuant to the provisions of 37 CFR 1.137(b) in that (1) the reply in the form of a Request for Continued Examination (with RCE filing fee and submission under 37 CFR 1.114); (2) the petition fee of $1620; and (3) the required statement of unintentional delay have been received. Accordingly, the reply to the final Office Action of September 3, 2009 is accepted as having been unintentionally delayed.

Telephone inquiries concerning this decision should be directed to David A. Bucci at (571) 272-7099 or in his absence, the undersigned at (571) 272-3219.

The application file is being referred to Technology Center AU 2611 for appropriate action on the concurrently filed Request for Continued Examination and amendment.

Nancy Johnson
Senior Petitions Attorney
Office of Petitions

UNITED STATES DEPARTMENT OF COMMERCE
Patent and Trademark Office
ASSISTANT SECRETARY OF COMMERCE AND
COMMISSIONER OF PATENTS AND TRADEMARKS
Washington, DC 20231

12/14/06

Patent No. :7449960
Inventor(s) :Bunch et al.
Issued : 11/11/2008
Title : FREQUENCY MODULATION LINEARIZATION SYSTEM FOR A FRACTIONAL-N OFFSET PLL
Atty.doc./File No.

Request for Certificates of Correction

Consideration has been given to your request for the issuance of a Certificate of Correction, for the above – identified patent under the provisions of CFR 1.322.

Inspection of the application for the patent reveals col. 9 col. 10 line 56 & 11 is printed in accordance with the record and please show evidence of an amendment or supporting document. Therefore being no fault on the Patent and Trademark Office, It has no authority to issue a certificate of correction under the provision of 1.322.

Future written correspondence concerning this matter should be filed and directed to Decisions & Certificates of Correction Branch.

Henry Randall
Cecelia Newman
Decisions & Certificates
of Correction Branch
(703) 308-9390 Ext. 108

WITHROW & TERRANOVA P.L.L.C.
100 Regency Forest Drive
Suite 160
Cary, NC 27518

HR/MD

SPE RESPONSE FOR CERTIFICATE OF CORRECTION

Paper No.: _____

DATE : 2/9/09

TO SPE OF : ART UNIT 2817 Robert Pascal

SUBJECT : Request for Certificate of Correction for Appl. No.: 11/415808 Patent No.: 7449960

Please respond to this request for a certificate of correction within 7 days.

FOR IFW FILES:

Please review the requested changes/corrections as shown in the **COCIN** document(s) in the IFW application image. No new matter should be introduced, nor should the scope or meaning of the claims be changed.

Please complete the response (see below) and forward the completed response to scanning using document code **COCX**.

FOR PAPER FILES:

Please review the requested changes/corrections as shown in the attached certificate of correction. Please complete this form (see below) and forward it with the file to:

Certificates of Correction Branch (CofC)
South Tower - 9A22
Palm Location 7580

Certificates of Correction Branch
703-308-9390 ext. _____

Thank You For Your Assistance

The request for issuing the above-identified correction(s) is hereby:
Note your decision on the appropriate box.

- ☒ **Approved** — **All** changes apply.
- ☐ **Approved in Part** — Specify below which changes **do not** apply.
- ☐ **Denied** — State the reasons for denial below.

Comments: _____

SPE

2817
Art Unit

SPE RESPONSE FOR CERTIFICATE OF CORRECTION

Paper No.: _____

DATE : 2/9/09

TO SPE OF : ART UNIT 2817 Robert Pascal

SUBJECT : Request for Certificate of Correction for Appl. No.: 11/415808 Patent No.: 7449960

Please respond to this request for a certificate of correction within 7 days.

FOR IFW FILES:

Please review the requested changes/corrections as shown in the **COCIN** document(s) in the IFW application image. No new matter should be introduced, nor should the scope or meaning of the claims be changed.

Please complete the response (see below) and forward the completed response to scanning using document code **COCX**.

FOR PAPER FILES:

Please review the requested changes/corrections as shown in the attached certificate of correction. Please complete this form (see below) and forward it with the file to:

Certificates of Correction Branch (CofC)
South Tower - 9A22
Palm Location 7580

Certificates of Correction Branch
703-308-9390 ext. _____

Thank You For Your Assistance

The request for issuing the above-identified correction(s) is hereby:
Note your decision on the appropriate box.

- ☒ **Approved** — **All** changes apply.
- ☐ **Approved in Part** — Specify below which changes **do not** apply.
- ☐ **Denied** — State the reasons for denial below.

Comments: _____

SPE

2817
Art Unit

PAGE 2/2 * RCVD AT 3/31/2009 2:01:17 PM [Eastern Daylight Time] * SVR:USPTO-EFXRF-5/43 * DNIS:2709892 * CSID: * DURATION (mm-ss):00-56

UNITED STATES PATENT AND TRADEMARK OFFICE

Commissioner for Patents
United States Patent and Trademark Office
P.O. Box 1450
Alexandria, VA 22313-1450
www.uspto.gov

COPY MAILED

JUN 0 9 2008

SCHWEGMAN, LUNDBERG & WOESSNER, PA
P.O. BOX 2938
MINNEAPOLIS, MN 55402

In re Application of	:	
Robert J. Cipolle, et al.	:	
Application No. 11/415,820	:	DECISION ON PETITION
Filed: May 2, 2006	:	TO WITHDRAW
Attorney Docket No. 600.645US1	:	FROM RECORD
	:	

This is a decision on the Request to Withdraw as attorney or agent of record under 37 C.F.R. § 1.36(b), filed November 14, 2007.

The request is **DISMISSED** as moot.

A review of the file record indicates that the power of attorney to Schwegman, Lundberg & Woessner. PA has been revoked by the assignee of the patent application on March 20, 2008. Accordingly, the request to withdraw under 37 C.F.R. § 1.36(b) is moot.

All future communications from the Office will continue to be directed to the below-listed address until otherwise notified by applicant.

Telephone inquires concerning this decision should be directed to undersigned at 571-272- 1642.

April M. Wise
Petitions Examiner
Office of Petitions

cc: WALTER G. HANCHUK
CHADBOURNE & PARKE, LLP
30 ROCKEFELLER PLAZA
NEW YORK, NY 10112

UNITED STATES PATENT AND TRADEMARK OFFICE

Commissioner for Patents
United States Patent and Trademark Office
P.O. Box 1450
Alexandria, VA 22313-1450
www.uspto.gov

TRASK BRITT
P.O. BOX 2550
SALT LAKE CITY UT 84110

COPY MAILED

MAY 10 2007

OFFICE OF PETITIONS

In re Application of	:	
McCausland, Vaughan, Lisonbee and Hennen	:	DECISION ACCORDING STATUS
Application No. 11/415,837	:	UNDER 37 CFR 1.47(a)
Filed: 05/02/2006	:	
Attorney Docket No. 2820-7174.1US	:	
Title: TRANSFER FACTOR	:	
PREPARATIONS AND ASSOCIATED	:	
METHODS	:	

This decision is in response to the petition under 37 CFR 1.47(a), filed October 24, 2006. The petition was recently forwarded to the Office of Petitions for a decision on the merits. The Office apologizes for any inconvenience.

Petitioners have shown that the non-signing inventor, William J. Hennen, expressly refused to join in the application after being presented with the application papers. Petitioners have filed an acceptable declaration executed by the available joint inventors.

The application and papers have been reviewed and found in compliance with 37 CFR 1.47(a). This application is hereby accorded Rule 1.47(a) status. Accordingly, the petition is GRANTED. As provided in 37 CFR 1.47(c), this Office will forward notice of this application's filing to the non-signing inventor at the address given in the petition. Notice of the filing of this application will also be published in the Official Gazette.

The current fee for filing a petition under 37 CFR 1.47(a) is $200.00; however, petitioners paid only $130.00. Therefore, the Office will charge the Deposit Account in the amount of $70.00.

The matter is being referred to Technology Center Art Unit 1655 for examination in due course.

Telephone inquiries regarding this decision should be directed to the undersigned at (571) 272-3211.

C. T. Donnell

Christina Tartera Donnell
Senior Petitions Attorney
Office of Petitions

UNITED STATES PATENT AND TRADEMARK OFFICE

Commissioner for Patents
United States Patent and Trademark Office
P.O. Box 1450
Alexandria, VA 22313-1450
www.uspto.gov

WILLIAM J. HENNEN
3453 KENNEKUK LANE
EAGLE MOUNTAIN, UT 84043

COPY MAILED

MAY 10 2007

OFFICE OF PETITIONS

In re Application of :
McCausland, Vaughan, Lisonbee and Hennen :
Application No. 11/415,837 : LETTER
Filed: 05/02/2006 :
Attorney Docket No. 2820-7174.1US :
Title: TRANSFER FACTOR :
PREPARATIONS AND ASSOCIATED :
METHODS :

Dear Dr. Hennen:

You are named as a joint inventor in the above-identified United States patent application, filed under the provisions of 35 U.S.C. 116 (United States Code), and 37 CFR 1.47(a), Rules of Practice in Patent Cases. Should a patent be granted on the application you will be designated therein as a joint inventor.

As a named inventor you are entitled to inspect any paper in the file wrapper of the application, order copies of all or any part thereof (at a prepaid cost per 37 CFR 1.19) or make your position of record in the application. Alternatively, you may arrange to do any of the preceding through a registered patent attorney or agent presenting written authorization from you. If you care to join the application, counsel of record (see below) would presumably assist you. Joining the application would entail the filing of an appropriate oath or declaration by you pursuant to 37 CFR 1.63.

Requests for information regarding your application should be directed to the File Information Unit at (703) 308-2733. Information regarding how to pay for and order a copy of the application, or a specific paper in the application, should be directed to the Certification Division at (571) 272-3150 or 1 (800) 972-6382 (outside the Washington, DC area).

C. T. Donnell

Christina Tartera Donnell
Senior Petitions Attorney
Office of Petitions

Cc: TRASK BRITT
P.O. BOX 2550
SALT LAKE CITY UT 84110

UNITED STATES PATENT AND TRADEMARK OFFICE

UNITED STATES DEPARTMENT OF COMMERCE
United States Patent and Trademark Office
Address: COMMISSIONER FOR PATENTS
P.O. Box 1450
Alexandria, Virginia 22313-1450
www.uspto.gov

MBHB/TRADING TECHNOLOGIES
300 SOUTH WACKER DRIVE
SUITE 3200
CHICAGO, IL 60606

Mail Date: 04/20/2010

Applicant	: Ryan N. Andrews	: DECISION ON REQUEST FOR
Patent Number	: 7584141	: RECALCULATION of PATENT
Issue Date	: 09/01/2009	: TERM ADJUSTMENT IN VIEW
Appliction No	: 11/415,845	: OF WYETH AND NOTICE OF INTENT TO
Filed	: 05/02/2006	: ISSUE CERTIFICATE OF CORRECTION
		:

The Request for Recalculation is **GRANTED** to the extent indicated.

The patent term adjustment has been determined to be **0** days. The USPTO will *sua sponte* issue a certificate of correction reflecting the amount of PTA days determined by the recalculation.

Prior to the issuance of the certificate of correction, the USPTO will afford patentee an opportunity to be heard and request reconsideration. Accordingly, patentee has **one month or thirty (30) days**, whichever is longer, to file a request for reconsideration of this patent term adjustment calculation. See 35 U.S.C. 154(b)(3)(B)(ii) and 37 CFR 1.322(a)(4). No extensions of time will be granted under 37 CFR 1.136.

Patentee should use document code PET.OP if electronically filing a request for reconsideration of this patent term adjustment calculation. The patentee must also include the information required by 37 CFR 1.705(b)(2) and the fee required by 37 CFR 1.18(e). If patentee does not file a timely request for reconsideration of this patent term adjustment calculation including the information required by 37 CFR 1.705(b)(2) and the fee required by 37 CFR 1.18(e), the USPTO will issue a certificate of correction reflecting the PTA determination noted above.

Patentee should be aware that in order to preserve the right to review in the United States District Court for the District of Columbia of the USPTO patent term adjustment determination, patentee must ensure that he or she also take the steps required under 35 U.S.C. 154(b)(4)(A) in a timely manner. Nothing in the request for recalculation should be construed as providing an alternative time frame for commencing a civil action under 35 U.S.C. 154(b)(4)(A).

Any questions concerning this decision should be directed to the Office of Patent Legal Administration at 571-272-7702.

UNITED STATES PATENT AND TRADEMARK OFFICE

UNITED STATES DEPARTMENT OF COMMERCE
United States Patent and Trademark Office
Address: COMMISSIONER FOR PATENTS
P.O. Box 1450
Alexandria, Virginia 22313-1450
www.uspto.gov

MBHB/TRADING TECHNOLOGIES
300 SOUTH WACKER DRIVE
SUITE 3200
CHICAGO, IL 60606

Mail Date: 04/20/2010

Applicant	: Robert A. West	: DECISION ON REQUEST FOR
Patent Number	: 7620579	: RECALCULATION of PATENT
Issue Date	: 11/17/2009	: TERM ADJUSTMENT IN VIEW
Appliction No	: 11/415,846	: OF WYETH AND NOTICE OF INTENT TO
Filed	: 05/02/2006	: ISSUE CERTIFICATE OF CORRECTION
		:

The Request for Recalculation is **GRANTED** to the extent indicated.

The patent term adjustment has been determined to be **67** days. The USPTO will *sua sponte* issue a certificate of correction reflecting the amount of PTA days determined by the recalculation.

Prior to the issuance of the certificate of correction, the USPTO will afford patentee an opportunity to be heard and request reconsideration. Accordingly, patentee has **one month or thirty (30) days**, whichever is longer, to file a request for reconsideration of this patent term adjustment calculation. See 35 U.S.C. 154(b)(3)(B)(ii) and 37 CFR 1.322(a)(4). No extensions of time will be granted under 37 CFR 1.136.

Patentee should use document code PET.OP if electronically filing a request for reconsideration of this patent term adjustment calculation. The patentee must also include the information required by 37 CFR 1.705(b)(2) and the fee required by 37 CFR 1.18(e). If patentee does not file a timely request for reconsideration of this patent term adjustment calculation including the information required by 37 CFR 1.705(b)(2) and the fee required by 37 CFR 1.18(e), the USPTO will issue a certificate of correction reflecting the PTA determination noted above.

Patentee should be aware that in order to preserve the right to review in the United States District Court for the District of Columbia of the USPTO patent term adjustment determination, patentee must ensure that he or she also take the steps required under 35 U.S.C. 154(b)(4)(A) in a timely manner. Nothing in the request for recalculation should be construed as providing an alternative time frame for commencing a civil action under 35 U.S.C. 154(b)(4)(A).

Any questions concerning this decision should be directed to the Office of Patent Legal Administration at 571-272-7702.

UNITED STATES PATENT AND TRADEMARK OFFICE

UNITED STATES DEPARTMENT OF COMMERCE
United States Patent and Trademark Office
Address: COMMISSIONER FOR PATENTS
P.O. Box 1450
Alexandria, Virginia 22313-1450
www.uspto.gov

KNOBBE MARTENS OLSON & BEAR LLP
2040 MAIN STREET
FOURTEENTH FLOOR
IRVINE, CA 92614

Mail Date: 04/20/2010

Applicant	: Byong-Ho Park	: DECISION ON REQUEST FOR
Patent Number	: 7658715	: RECALCULATION of PATENT
Issue Date	: 02/09/2010	: TERM ADJUSTMENT IN VIEW
Appliction No	: 11/415,855	: OF WYETH AND NOTICE OF INTENT TO
Filed	: 05/02/2006	: ISSUE CERTIFICATE OF CORRECTION
		:

The Request for Recalculation is **GRANTED** to the extent indicated.

The patent term adjustment has been determined to be **756** days. The USPTO will *sua sponte* issue a certificate of correction reflecting the amount of PTA days determined by the recalculation.

Prior to the issuance of the certificate of correction, the USPTO will afford patentee an opportunity to be heard and request reconsideration. Accordingly, patentee has **one month or thirty (30) days**, whichever is longer, to file a request for reconsideration of this patent term adjustment calculation. See 35 U.S.C. 154(b)(3)(B)(ii) and 37 CFR 1.322(a)(4). No extensions of time will be granted under 37 CFR 1.136.

Patentee should use document code PET.OP if electronically filing a request for reconsideration of this patent term adjustment calculation. The patentee must also include the information required by 37 CFR 1.705(b)(2) and the fee required by 37 CFR 1.18(e). If patentee does not file a timely request for reconsideration of this patent term adjustment calculation including the information required by 37 CFR 1.705(b)(2) and the fee required by 37 CFR 1.18(e), the USPTO will issue a certificate of correction reflecting the PTA determination noted above.

Patentee should be aware that in order to preserve the right to review in the United States District Court for the District of Columbia of the USPTO patent term adjustment determination, patentee must ensure that he or she also take the steps required under 35 U.S.C. 154(b)(4)(A) in a timely manner. Nothing in the request for recalculation should be construed as providing an alternative time frame for commencing a civil action under 35 U.S.C. 154(b)(4)(A).

Any questions concerning this decision should be directed to the Office of Patent Legal Administration at 571-272-7702.

UNITED STATES PATENT AND TRADEMARK OFFICE

UNITED STATES DEPARTMENT OF COMMERCE
United States Patent and Trademark Office
Address: COMMISSIONER FOR PATENTS
P.O. Box 1450
Alexandria, Virginia 22313-1450
www.uspto.gov

KNOBBE MARTENS OLSON & BEAR LLP
2040 MAIN STREET
FOURTEENTH FLOOR
IRVINE, CA 92614

Mail Date: 05/17/2010

Applicant	: Thomas F. Fangrow	: DECISION ON REQUEST FOR
Patent Number	: 7658733	: RECALCULATION of PATENT
Issue Date	: 02/09/2010	: TERM ADJUSTMENT IN VIEW
Application No	: 11/415,865	: OF WYETH AND NOTICE OF INTENT TO
Filed	: 05/02/2006	: ISSUE CERTIFICATE OF CORRECTION
		:

The Request for Recalculation is **GRANTED** to the extent indicated.

The patent term adjustment has been determined to be **0** days. The USPTO will *sua sponte* issue a certificate of correction reflecting the amount of PTA days determined by the recalculation.

Prior to the issuance of the certificate of correction, the USPTO will afford patentee an opportunity to be heard and request reconsideration. Accordingly, patentee has **one month or thirty (30) days**, whichever is longer, to file a request for reconsideration of this patent term adjustment calculation. See 35 U.S.C. 154(b)(3)(B)(ii) and 37 CFR 1.322(a)(4). No extensions of time will be granted under 37 CFR 1.136.

Patentee should use document code PET.OP if electronically filing a request for reconsideration of this patent term adjustment calculation. The patentee must also include the information required by 37 CFR 1.705(b)(2) and the fee required by 37 CFR 1.18(e). If patentee does not file a timely request for reconsideration of this patent term adjustment calculation including the information required by 37 CFR 1.705(b)(2) and the fee required by 37 CFR 1.18(e), the USPTO will issue a certificate of correction reflecting the PTA determination noted above.

Patentee should be aware that in order to preserve the right to review in the United States District Court for the District of Columbia of the USPTO patent term adjustment determination, patentee must ensure that he or she also take the steps required under 35 U.S.C. 154(b)(4)(A) in a timely manner. Nothing in the request for recalculation should be construed as providing an alternative time frame for commencing a civil action under 35 U.S.C. 154(b)(4)(A).

Any questions concerning this decision should be directed to the Office of Patent Legal Administration at 571-272-7702.

UNITED STATES PATENT AND TRADEMARK OFFICE

Commissioner for Patents
United States Patent and Trademark Office
P.O. Box 1450
Alexandria, VA 22313-1450
www.uspto.gov

SONNENSCHEIN NATH & ROSENTHAL LLP
P.O. BOX 061080
SOUTH WACKER DRIVE STATION, WILLIS TOWER
CHICAGO IL 60606

COPY MAILED
DEC 18 2009
OFFICE OF PETITIONS

In re Patent No. 7,572,926	:
Thompson et al.	:
Issue Date: August 11, 2009	:
Application No. 11/415,867	: DECISION ON REQUEST FOR
Filed: May 2, 2006	: RECONSIDERATION OF
Attorney Dkt. No.MONS:006USD1	: PATENT TERM ADJUSTMENT
Title: PLANT DESATURASES -	:
COMPOSITIONS AND USES	:

This is in response to the "REQUEST FOR RECONSIDERATION OF PATENT TERM ADJUSTMENT UNDER 37 C.F.R. §1.705(d)" filed October 8, 2009. Patentees request that the patent term be adjusted from 290 days to 391 days.

The request for reconsideration of patent term adjustment is **DISMISSED**.

On August 11, 2009, the above-identified application matured into US Patent No. 7,572,926 with a patent term adjustment of 290 days. This request for reconsideration of patent term adjustment (including the submitted fee) was timely filed within two months of the issue date of the patent. See 37 CFR 1.705(d).

Patentees request recalculation of the patent term adjustment based on the decision in Wyeth v. Dudas, 580 F. Supp. 2d 138, 88 U.S.P.Q. 2d 1538 (D.D.C. 2008). Patentees maintain that the patent is entitled to an additional 101 days of patent term adjustment due to the Three Year Delay by the Office, pursuant to 37 CFR § 1.703(b). Patentees maintain that the 101 days of patent term adjustment under 37 C.F.R. § 1.703(b) does not overlap with the 319 day period of adjustment due to examination delay, pursuant to 37 CFR §1.702(a), as these periods do not occur on the same day. Thus, patentees request that the determination of patent term adjustment be increased to a total of three hundred ninety-one (391) days (the sum of the period of three-year delay (101 days) and the period of examination delay

(319 days) minus applicants' delay (29 days). Patentees do not dispute the 29-day reduction for applicants' delay.

The Office finds that as of the issuance of the patent on August 11, 2009, the application was pending three years and 101 days after its filing date (May 3, 2009 to August 11, 2009). A period of adjustment of 319 days was entered for Office delay pursuant to 37 CFR 1.702(a)(1). At issue is whether patentee should accrue an additional 101 days of patent term adjustment for the Office taking in excess of three years to issue the patent as well as 319 days for Office failure to take a certain action within a specified time frame (or examination delay).

The Office contends that the entire 101-day period of delay in issuance of the patent overlaps with the period of 319 days of examination delay. Patentees' calculation of the period of overlap is inconsistent with the Office's interpretation of this provision. 35 U.S.C. 154(b)(2)(A) limits the adjustment of patent term, as follows:

> to the extent that the periods of delay attributable to grounds specified in paragraph (1) overlap, the period of any adjustment granted under this subsection shall not exceed the actual number of days the issuance of the patent was delayed.

Likewise, 37 CFR 1.703(f) provides that:

> To the extent that periods of delay attributable to the grounds specified in §1.702 overlap, the period of adjustment granted under this section shall not exceed the actual number of days the issuance of the patent was delayed.

As explained in *Explanation of 37 CFR 1.703(f) and of the United States Patent and Trademark Office Interpretation of 35 U.S.C. 154(b)(2)(A)*, 69 Fed. Reg. 34283 (June 21, 2004), the Office interprets 35 U.S.C. 154(b)(2)(A) as permitting either patent term adjustment under 35 U.S.C. 154(b)(1)(A)(i)-(iv), or patent term adjustment under 35 U.S.C. 154(b)(1)(B), but not as permitting patent term adjustment under both 35 U.S.C. 154(b)(1)(A)(i)-(iv) and 154(b)(1)(B). Accordingly, the Office implements the overlap provision as follows:

> If an application is entitled to an adjustment under 35 U.S.C. 154(b)(1)(B), the entire period during which the application was pending (except for periods excluded under 35 U.S.C. 154(b)(1)(B)(i)-(iii)), and not just the period beginning three years after the actual filing date of the application, is the period of delay under 35 U.S.C. 154(b)(1)(B) in determining whether periods of delay overlap under 35 U.S.C. 154(b)(2)(A). Thus, any days of delay for Office issuance of the patent more than 3 years after the filing date of the application, which overlap with the days of patent term adjustment accorded prior to the issuance of the patent will not result in any additional patent term adjustment. See 35 U.S.C. 154(b)(1)(B), 35 U.S.C. 154(b)(2)(A), and 37 CFR § 1.703(f). See *Changes to Implement Patent Term Adjustment Under Twenty Year Term; Final Rule*, 65 Fed. Reg. 56366 (Sept. 18, 2000). See also *Revision of Patent Term Extension and Patent Term Adjustment Provisions; Final Rule*, 69 Fed. Reg. 21704 (April 22, 2004), 1282 Off. Gaz. Pat. Office 100 (May 18, 2004). See also *Explanation of 37 CFR 1.703(f) and of the United States Patent and Trademark Office Interpretation of 35 U.S.C. 154(b)(2)(A)*, 69 Fed. Reg. 34283 (June 21, 2004).

As such, the period for over 3 year pendency does not overlap only to the extent that the actual dates in the period beginning three years after the date on which the application was filed overlap with the actual dates in the periods for failure of the Office to take action within specified time frames.

In this instance, the relevant period under 35 U.S.C. 154(b)(1)(B) in determining whether periods of delay "overlap" under 35 U.S.C. 154(b)(2)(A) is the entire period during which the application was pending before the Office, May 2, 2006 until issuance on August 11, 2009. This 101 days of pendency over three years is the relevant period for considering overlap. 319 days of patent term adjustment were accorded for Office delay pursuant to 37 CFR §1.702(a)(1). Entry of both 101 days pursuant to 37 CFR §1.702(b) for the Office taking in excess of three years to issue the patent and 319 days pursuant to 37 CFR §1.702(a) for Office examination delay is neither permitted nor warranted. The Office did not delay 319 days and then another 101 days. The greater period, 319 days, is the actual number of days issuance of the patent was delayed by the Office.

In view thereof, in no adjustment to the patent term will be made.

The Office acknowledges the previous submission of the $200.00 fee set forth in 37 CFR 1.18(e). No additional fees are required.

The file does not indicate a change of address has been submitted, although the address given on the petition differs from the address of record. If appropriate, a change of address should be filed in accordance with MPEP 601.03. A courtesy copy of this decision is being mailed to the address given on the petition; however, the Office will mail all future correspondence solely to the address of record.

Telephone inquiries specific to this matter should be directed to Charlema Grant, Petitions Attorney, at (571) 272-3215.

/ALESIA M. BROWN/

Alesia M. Brown
Petitions Attorney
Office of Petitions

CC: MARSHALL P. BYRD
SONNENSCHEIN NATH & ROSENTHAL LLP
2000 MCKINNEY, SUITE 1900
DALLAS, TX 75201

UNITED STATES PATENT AND TRADEMARK OFFICE

UNITED STATES DEPARTMENT OF COMMERCE
United States Patent and Trademark Office
Address: COMMISSIONER FOR PATENTS
P.O. Box 1450
Alexandria, Virginia 22313-1450
www.uspto.gov

SONNENSCHEIN NATH & ROSENTHAL LLP
P.O. BOX 061080
SOUTH WACKER DRIVE STATION, WILLIS TOWER
CHICAGO, IL 60606

Mail Date: 04/21/2010

Applicant	: Gregory A. Thompson	: DECISION ON REQUEST FOR
Patent Number	: 7572926	: RECALCULATION of PATENT
Issue Date	: 08/11/2009	: TERM ADJUSTMENT IN VIEW
Appliction No	: 11/415,867	: OF WYETH AND NOTICE OF INTENT TO
Filed	: 05/02/2006	: ISSUE CERTIFICATE OF CORRECTION
		:

The Request for Recalculation is **GRANTED** to the extent indicated.

The patent term adjustment has been determined to be **391** days. The USPTO will *sua sponte* issue a certificate of correction reflecting the amount of PTA days determined by the recalculation.

Prior to the issuance of the certificate of correction, the USPTO will afford patentee an opportunity to be heard and request reconsideration. Accordingly, patentee has **one month or thirty (30) days**, whichever is longer, to file a request for reconsideration of this patent term adjustment calculation. See 35 U.S.C. 154(b)(3)(B)(ii) and 37 CFR 1.322(a)(4). No extensions of time will be granted under 37 CFR 1.136.

Patentee should use document code PET.OP if electronically filing a request for reconsideration of this patent term adjustment calculation. The patentee must also include the information required by 37 CFR 1.705(b)(2) and the fee required by 37 CFR 1.18(e). If patentee does not file a timely request for reconsideration of this patent term adjustment calculation including the information required by 37 CFR 1.705(b)(2) and the fee required by 37 CFR 1.18(e), the USPTO will issue a certificate of correction reflecting the PTA determination noted above.

Patentee should be aware that in order to preserve the right to review in the United States District Court for the District of Columbia of the USPTO patent term adjustment determination, patentee must ensure that he or she also take the steps required under 35 U.S.C. 154(b)(4)(A) in a timely manner. Nothing in the request for recalculation should be construed as providing an alternative time frame for commencing a civil action under 35 U.S.C. 154(b)(4)(A).

Any questions concerning this decision should be directed to the Office of Patent Legal Administration at 571-272-7702.

Enter Amendment
/P. A. D'Agostino/
March 9, 2010

IN THE UNITED STATES PATENT AND TRADEMARK OFFICE

APPLICANTS:	Adam P. Harris et al.
APPLICATION NO.:	11/415,881
FILING DATE:	May 1, 2006
TITLE:	Invalidating Network Devices with Illicit Peripherals
EXAMINER:	Paul Anthony D'Agostino
ART UNIT:	3714
CONFIRMATION NO.:	4377
ATTY. DKT. NO.:	PA3572US

MAIL STOP AF
COMMISSIONER FOR PATENTS
P.O. BOX 1450
ALEXANDRIA, VA 22313-1450

RESPONSE D

Examiner D'Agostino:

In response to the final office action mailed December 8, 2009 (*Office Action*), please enter the following amendments and consider the following remarks. The Applicants' amendments to the **claims** begins on page **two**. The Applicants' **remarks** and **conclusions** as to the allowability of this application begin on pages **six** and **eleven**, respectively.

UNITED STATES PATENT AND TRADEMARK OFFICE

Commissioner for Patents
United States Patent and Trademark Office
P.O. Box 1450
Alexandria, VA 22313-1450
www.uspto.gov

Paper No.

MBHB/TRADING TECHNOLOGIES
300 SOUTH WACKER DRIVE
SUITE 3200
CHICAGO IL 60606

COPY MAILED
MAR 02 2010

In re Application of	:	
Buck	:	
Application No. 11/415,886	:	ON APPLICATION FOR
Filed: May 2, 2006	:	PATENT TERM ADJUSTMENT
Atty Docket No. 04-822-Z	:	
Title: SYSTEM AND METHOD FOR	:	
ASSISTED AWARENESS	:	

This is in response to the "REQUEST FOR RECONSIDERTAION OF PATENT TERM ADJUSTMENT," filed December 8, 2009. Applicant submits that the correct patent term adjustment to be indicated on the patent is three hundred and three (303) days, not two hundred and twenty (220) days as calculated by the Office as of the mailing of the initial determination of patent term adjustment. Applicant requests this correction solely on the basis that the Office will take in excess of three years to issue this patent.

As the instant application for patent term adjustment requests reconsideration of the patent term adjustment as it relates to the Office's failure to issue the patent within 3 years of the filing date, the application for patent term adjustment under 37 CFR 1.705(b) is **DISMISSED as PREMATURE**.

Knowledge of the actual date the patent issues is required to calculate the amount, if any, of additional patent term patentee is entitled to for Office failure to issue the patent within 3 years. See § 1.702(b). (This is true even where a request for continued examination (RCE) was filed). The computer will not undertake the § 1.702(b) calculation until the actual date of issuance of the patent has been determined. Likewise, the computer will not calculate any further Office delay under § 1.702(a)(4) or applicant delay under § 1.704(c)(10) until the actual date of issuance of the patent has been determined. As

such, the Office cannot make a determination on the correctness of the patent term adjustment until the patent has issued.

Requesting reconsideration of the patent term adjustment to be indicated on the patent under 37 CFR 1.705(b) based on the initial determination of patent term adjustment and a projected issuance date of the patent (or even the filing date of the request for continued examination) is premature. Accordingly, it is appropriate to dismiss as premature such a request.

Rather than file an application for patent term adjustment under 37 CFR 1.705(b) contesting the 37 CFR 1.702(b) calculation at the time of the mailing of the notice of allowance, applicant is advised that they may wait until the time of the issuance of the patent and file a request for reconsideration of the patent term adjustment pursuant to 37 CFR 1.705(d). As the USPTO does not calculate the amount of time earned pursuant to 37 CFR 1.702(b) until the time of the issuance of the patent, the Office will consider any request for reconsideration of the patent term adjustment due to an error in the calculation of 37 CFR 1.702(b) to be timely if the request for reconsideration is filed within two months of the issuance of the patent. However, as to all other bases for contesting the initial determination of patent term adjustment received with the notice of allowance, applicant must timely file an application for patent term adjustment prior to the payment of the issue fee.[1]

The Office acknowledges submission of the $200.00 fee set forth in 37 CFR 1.18(e). No additional fees are required.

Any request for reconsideration of the patent term adjustment indicated on the patent must be timely filed within 2 months after issuance pursuant to 37 CFR 1.705(d) and must include payment of the required fee under 37 CFR 1.18(e).

---

[1] For example, if applicant disputes both the calculation of patent term adjustment under 37 CFR 1.702(a)(1) for Office failure to mail a first Office action or notice of allowance not later than fourteen months after the date on which the application was filed and under 37 CFR 1.702(b) for Office failure to issue a patent within three years of the actual filing date of the application, then applicant must still timely file an application for patent term adjustment prior to the payment of the issue fee to contest the calculation of Office delay in issuing a first Office action or notice of allowance. See 37 CFR 1.705(b) and 35 U.S.C. 154(b)(3)(B). A dispute as to the calculation of the §1.702(a)(1) period raised on request for reconsideration of patent term adjustment under 37 CFR 1.705(d) will be dismissed as untimely filed.

The Office of Data Management has been advised of this decision. This application is being referred to the Office of Data Management for issuance of the patent.

Telephone inquiries regarding this decision should be directed to Senior Attorney Paul Shanoski at (571) 272-3225.

Nancy Johnson
Senior Petitions Attorney
Office of Petitions

UNITED STATES PATENT AND TRADEMARK OFFICE

Commissioner for Patents
United States Patent and Trademark Office
P.O. Box 1450
Alexandria, VA 22313-1450
www.uspto.gov

KNOBBE MARTENS OLSON & BEAR LLP
2040 MAIN STREET
FOURTEENTH FLOOR
IRVINE, CA 92614

COPY MAILED

APR 12 2007

OFFICE OF PETITIONS

In re Application of	:	
Hemchandra M. Shertukde et al	:	
Application No. 11/415,895	:	DECISION ON PETITION
Filed: May 2, 2006	:	
Attorney Docket No. MEDSS.013A	:	

This is in response to the petition under 37 CFR 1.47(a), filed November 3, 2006.

The petition is **GRANTED**.

The above-identified application was filed on May 2, 2006, without an executed oath or declaration. Accordingly, on June 1, 2006, a "Notice to File Missing Parts of Nonprovisional Application (Notice)," setting a two month period for reply was mailed requiring the submission of a properly executed oath or declaration and surcharge of $130.

In response, the instant petition under 37 CFR 1.47(a), a Declaration naming Hemchandra Shertukde and Peter V. Beckmann as joint inventors but executed only by Peter V. Beckmann, along with a $130 surcharge fee, a $200 petition fee, and a $1,020 three month extension of time fee were received. The petition states that joint inventor Hemchandra Shertukde refuses to join in the filing of the present application.

A grantable petition under 37 CFR 1.47(a) requires: (1) proof that the non-signing inventor cannot be reached or refuses to execute the oath or declaration after having been presented with the application papers (specification, claims and drawings); (2) an acceptable oath or declaration in compliance with 35 U.S.C. §§ 115 and 116 and 37 CFR 1.63; (3) the petition fee of $200; and (4) a statement of the last known address of the non-signing inventor.

Petitioner has shown that the non-signing inventor, Hemchandra M. Shertukde, has refused to join in the filing of the above-identified application.

The application and papers have been reviewed and found in compliance with 37 CFR 1.47(a). This application is hereby accorded Rule 1.47(a) status.

As provided in 37 CFR 1.47(c), this Office will forward notice of this application's filing to the non-signing inventor at the address given in the petition. Notice of the filing of this application will also be published in the Official Gazette.

This application is being referred to the Office of Initial Patent Examination for pre-examination processing.

Telephone inquiries regarding this decision should be directed to the undersigned at (571) 272-3218.

Frances Hicks
Petitions Examiner
Office of Petitions

UNITED STATES PATENT AND TRADEMARK OFFICE

Commissioner for Patents
United States Patent and Trademark Office
P.O. Box 1450
Alexandria, VA 22313-1450
www.uspto.gov

ROBERT HICKLING
8306 HUNTINGTON ROAD
HUNTINGTON WOODS, MI 48070

COPY MAILED
JUL 0 7 2006
OFFICE OF PETITIONS

In re Application of	:	
Robert Hickling	:	
Application No. 11/415,910	:	DECISION ON PETITION
Filed: May 2, 2006	:	TO MAKE SPECIAL UNDER
Attorney Docket No. 7674.2	:	37 CFR 1.102(c)(1)

This is a decision on the petition under 37 CFR 1.102(c)(1), filed May 2, 2006, to make the above-identified application special based on applicant's age as set forth in M.P.E.P. § 708.02, Section IV.

The petition is **GRANTED**.

A grantable petition to make an application special under 37 CFR 1.102(c)(1) and MPEP § 708.02, Section IV: Applicant's Age must be accompanied by evidence showing that at least one of the applicants is 65 years of age, or more, such as a birth certificate or a statement by applicant. No fee is required.

The petition includes a statement by Robert Hickling attesting that he is over 65 years of age. Accordingly, the above-identified application has been accorded "special" status.

Telephone inquiries concerning this decision should be directed to Wan Laymon at 571-272-3220.

All other inquiries concerning either the examination or status of the application should be directed to the Technology Center.

This application is being referred to Technology Center AU 2615 for action on the merits commensurate with this decision.

Wan Laymon
Petitions Examiner
Office of Petitions

UNITED STATES PATENT AND TRADEMARK OFFICE

Commissioner for Patents
United States Patent and Trademark Office
P.O. Box 1450
Alexandria, VA 22313-1450
www.uspto.gov

PFIZER INC.
PATENT DEPARTMENT
Building 114 M/S 114
EASTERN POINT ROAD
GROTON, CT 06340

COPY MAILED
FEB 01 2010

In re Application of Barrett et al.	:	
Application No. 11/415,935	:	On Application For
Filing Date: May 2, 2006	:	Patent Term Adjustment
Attorney Docket No. PC32803A	:	

This is in response to the "Application for Patent Term Adjustment Under 37 CFR § 1.705" filed November 12, 2009. Applicants submit the correct patent term adjustment to be indicated on the patent is eight hundred forty-five (845) days, not five hundred thirty four (534) days as calculated by the Office as of the mailing of the initial determination of patent term adjustment. Applicants request this correction solely on the basis that the Office will take in excess of three years to issue this patent.

As the instant application for patent term adjustment requests reconsideration of the patent term adjustment as it relates to the Office's failure to issue the patent within 3 years of the filing date, the application for patent term adjustment under 37 CFR 1.705(b) is **DISMISSED as PREMATURE**.

Knowledge of the actual date the patent issues is required to calculate the amount, if any, of additional patent term patentee is entitled to for Office failure to issue the patent within 3 years. See 37 CFR 1.702(b). (This is true even where a request for continued examination (RCE) was filed). The computer will not undertake the § 1.702(b) calculation until the actual date of issuance of the patent has been determined. Likewise, the computer will not calculate any further Office delay under § 1.702(a)(4) or applicant delay under § 1.704(c)(10) until the actual date of issuance of the patent has been determined. As such, the Office can not make a determination on the correctness of the patent term adjustment until the patent has issued.

Requesting reconsideration of the patent term adjustment to be indicated on the patent under 37 CFR 1.705(b) based on the initial determination of patent term adjustment and a projected issuance date of the patent (or even the filing date of the request for continued examination) is premature. Accordingly, it is appropriate to dismiss as premature such a request.

Rather than file an application for patent term adjustment under 37 CFR 1.705(b) contesting the 37 CFR 1.702(b) calculation at the time of the mailing of the notice of allowance, an applicant may wait until the time of the issuance of the patent and file a request for reconsideration of the

patent term adjustment pursuant to 37 CFR 1.705(d). As the USPTO does not calculate the amount of time earned pursuant to 37 CFR 1.702(b) until the time of the issuance of the patent, the Office will consider any request for reconsideration of the patent term adjustment due to an error in the calculation of 37 CFR 1.702(b) to be timely if the request for reconsideration is filed within two months of the issuance of the patent. However, as to all other bases for contesting the initial determination of patent term adjustment received with the notice of allowance, applicant must timely file an application for patent term adjustment prior to the payment of the issue fee.[1]

The Office acknowledges submission of the $200.00 fee set forth in 37 CFR 1.18(e) for consideration of the application for patent term adjustment under 37 CFR 1.705(b).

Any request for reconsideration of the patent term adjustment indicated on the patent must be timely filed within 2 months after issuance pursuant to 37 CFR 1.705(d) and must include payment of the required fee under 37 CFR 1.18(e).

The file does not indicate a change of address has been submitted, although the address given on the petition differs from the address of record. If appropriate, a request to change the address of record should be filed. A courtesy copy of this decision is being mailed to the address given on the petition; however, the Office will mail all future correspondence solely to the address of record.

The Office of Data Management has been advised of this decision. This application is being referred to the Office of Data Management for issuance of the patent.

Telephone inquiries regarding this communication should be directed to Petitions Attorney Steven Brantley at (571) 272-3203.

Nancy Johnson

Nancy Johnson
Senior Petitions Attorney
Office of Petitions

cc: Pfizer Inc.
Legal Division/Patent Department
10555 Science Center Drive
San Diego, CA 92121

[1] For example, if applicant disputes both the calculation of patent term adjustment under 37 CFR 1.702(a)(1) for Office failure to mail a first Office action or notice of allowance not later than fourteen months after the date on which the application was filed and under 37 CFR 1.702(b) for Office failure to issue a patent within three years of the actual filing date of the application, then applicant must still timely file an application for patent term adjustment prior to the payment of the issue fee to contest the calculation of Office delay in issuing a first Office action or notice of allowance. See 37 CFR 1.705(b) and 35 U.S.C. 154(b)(3)(B). A dispute as to the calculation of the §1.702(a)(1) period raised on request for reconsideration of patent term adjustment under 37 CFR 1.705(d) will be dismissed as untimely filed.

UNITED STATES PATENT AND TRADEMARK OFFICE

Commissioner for Patents
United States Patent and Trademark Office
P.O. Box 1450
Alexandria, VA 22313-1450
www.uspto.gov

JJGJR.: 02-07

Paper No: __

BRACEWELL & GIULIANI LLP
P.O. BOX 61389
HOUSTON TX 77208-1389

COPY MAILED

MAR 0 1 2007

OFFICE OF PETITIONS

In re Application of	:	
Clements et al.	:	
Application No. 11/415,936	:	ON PETITION
Filed: 2 May, 2006	:	
Attorney Docket No. 0771CG.058	:	

This is a decision on the petition filed on 7 August, 2006, under 37 C.F.R. §1.47(a).

For the reasons set forth below, the petition under 37 C.F.R. §1.47(a) is **GRANTED**.

The Office regrets the delay in addressing this matter, however, the petition was only presented to the attorneys in the Office of Petitions at this writing.

BACKGROUND

The record indicates:

- the instant application was filed on 2 May, 2006, without, *inter alia*, a fully executed oath/declaration;

- on 2 June, 2006, the Office mailed a Notice of Missing Parts indicating, *inter alia*, that a fully executed oath/declaration (signed and dated) was required;

- on 7 August, 2006, Petitioner Jeffrey Whittle (Reg. No. 36,382) filed, *inter alia*, the original petition, an oath/declaration signed by co-inventors Calhoun, Hammack, Boultinghouse, Cloutier, Davis, Whipkey and Black (for themselves and on behalf of non-signing co-inventor Leon M. Clements (Mr. Clements), and while Petitioner makes no documentary showing (i.e., there is no copy of the original transmittal letter) that the entire application (description, claims, abstract and drawings) was sent to non-signing

co-inventor Mr. Clements, there is a statement within the petition executed by Petitioner and an accompanying statement by an attorney alleged to be Petitioner's assistant, Denver S. Bisignano, who apparently is not registered to practice before the Office) to the effect that the entire application was provided to Mr. Clements, and there is an Email exchange between Messrs. Bisignano and Clements discussing the matter, and there is a statement as to Mr. Clements' current/reasonably last-known mailing address.

Out of an abundance of caution, Petitioners always are reminded that those registered to practice *and* all others who make representations before the Office are reminded to inquire into the underlying facts of representations made to the Office and support averments with the appropriate documentation–since all owe to the Office the continuing duty to disclose.[1]

---

[1] See supplement of 17 June, 1999. The Patent and Trademark Office is relying on petitioner's duty of candor and good faith and accepting a statement made by Petitioner. See Changes to Patent Practice and Procedure, 62 Fed. Reg. at 53160 and 53178, 1203 Off. Gaz. Pat. Office at 88 and 103 (responses to comments 64 and 109)(applicant obligated under 37 C.F.R. §10.18 to inquire into the underlying facts and circumstances when providing statements to the Patent and Trademark Office).

Specifically, the regulations at 37 C.F.R. §10.18 provide:

§ 10.18 Signature and certificate for correspondence filed in the Patent and Trademark Office.
(a) For all documents filed in the Office in patent, trademark, and other non-patent matters, except for correspondence that is required to be signed by the applicant or party, each piece of correspondence filed by a practitioner in the Patent and Trademark Office must bear a signature by such practitioner complying with the provisions of §1.4(d), §1.4(e), or § 2.193(c)(1) of this chapter.
(b) By presenting to the Office (whether by signing, filing, submitting, or later advocating) any paper, the party presenting such paper, whether a practitioner or non-practitioner, is certifying that—

(1) All statements made therein of the party's own knowledge are true, all statements made therein on information and belief are believed to be true, and all statements made therein are made with the knowledge that whoever, in any matter within the jurisdiction of the Patent and Trademark Office, knowingly and willfully falsifies, conceals, or covers up by any trick, scheme, or device a material fact, or makes any false, fictitious or fraudulent statements or representations, or makes or uses any false writing or document knowing the same to contain any false, fictitious or fraudulent statement or entry, shall be subject to the penalties set forth under 18 U.S.C. 1001, and that violations of this paragraph may jeopardize the validity of the application or document, or the validity or enforceability of any patent, trademark registration, or certificate resulting therefrom; and

(2) To the best of the party's knowledge, information and belief, formed after an inquiry reasonable under the circumstances, that —

(i) The paper is not being presented for any improper purpose, such as to harass someone or to cause unnecessary delay or needless increase in the cost of prosecution before the Office;

(ii) The claims and other legal contentions therein are warranted by existing law or by a nonfrivolous argument for the extension, modification, or reversal of existing law or the establishment of new law;

(iii) The allegations and other factual contentions have evidentiary support or, if specifically so identified, are likely to have evidentiary support after a reasonable opportunity for further investigation or discovery; and

(iv) The denials of factual contentions are warranted on the evidence, or if specifically so identified, are reasonably based on a lack of information or belief.

(c) Violations of paragraph (b)(1) of this section by a practitioner or non-practitioner may jeopardize the validity of the application or document, or the validity or enforceability of any patent, trademark registration, or certificate resulting therefrom. Violations of any of paragraphs (b)(2)(i) through (iv) of this section are, after notice and reasonable opportunity to respond, subject to such sanctions as deemed appropriate by the Commissioner, or the Commissioner's designee, which may include, but are not limited to, any combination of —

(1) Holding certain facts to have been established;
(2) Returning papers;
(3) Precluding a party from filing a paper, or presenting or contesting an issue;
(4) Imposing a monetary sanction;
(5) Requiring a terminal disclaimer for the period of the delay; or
(6) Terminating the proceedings in the Patent and Trademark Office.

(d) Any practitioner violating the provisions of this section may also be subject to disciplinary action. See § 10.23(c)(15).
[Added 50 FR 5175, Feb. 6, 1985, effective Mar. 8, 1985; para. (a) revised, 58 FR 54494, Oct. 22, 1993, effective Nov. 22, 1993; paras. (a) & (b) revised, paras. (c) & (d) added, 62 FR 53131, Oct. 10, 1997, effective Dec. 1, 1997; para. (a) revised, 69 FR 56481, Sept. 21, 2004, effective Oct. 21, 2004]

This application and its papers have been reviewed and found in compliance with 37 C.F.R. §1.47(a).

This application hereby is **ACCORDED status under 37 C.F.R. §1.47(a)**.

As provided under 37 C.F.R. §1.47(a), the Office will forward notice of this application's filing to the non-signing inventor at the address given in the petition.

Notice of the filing of this application also will be published in the Official Gazette.

This file is being released to OIPE for processing as necessary to reflect the instant decision before being released for examination in due course.

While telephone inquiries regarding this decision may be directed to the undersigned at (571) 272-3214, it is noted that all practice before the Office is in writing (see: 37 C.F.R. §1.2[2]) and the proper authority for action on any matter in this regard are the statutes (35 U.S.C.), regulations (37 C.F.R.) and the commentary on policy (MPEP). Therefore, no telephone discussion may be controlling or considered authority for Petitioner's/Caller's action(s).

John J. Gillon, Jr.
Senior Attorney
Office of Petitions

---

[2] The regulations at 37 C.F.R. §1.2 provide:
§1.2 Business to be transacted in writing.
All business with the Patent and Trademark Office should be transacted in writing.The personal attendance of applicants or their attorneys or agents at the Patent and Trademark Office is unnecessary. The action of the Patent and Trademark Office will be based exclusively on the written record in the Office. No attention will be paid to any alleged oral promise, stipulation,or understanding in relation to which there is disagreement or doubt.

UNITED STATES PATENT AND TRADEMARK OFFICE

Commissioner for Patents
United States Patent and Trademark Office
P.O. Box 1450
Alexandria, VA 22313-1450
www.uspto.gov

JJGJR.: 02-07

Paper No: __

LEON M. CLEMENTS
1625 CORNICHE
LEAGUE CITY, TX 77573

COPY MAILED

MAR 0 1 2007

OFFICE OF PETITIONS

In re Application of :
Clements et al. :
Application No. 11/415,936 :
Filed: 2 May, 2006 :
Attorney Docket No. 0771CG.058 :

COMMUNICATION

Dear Leon M.Clements:

You are named as inventor in the above identified United States patent application, filed under the provisions of 35 U.S.C. §116 (United States Code), and 37 C.F.R. §1.47,[1] ¶a, Rules of Practice in Patent Cases. Should a patent be granted on the application you will be designated therein as inventor.

As a named inventor you are entitled to inspect any paper in the file wrapper of the application, order copies of all or any part thereof (at a prepaid cost per 37 C.F.R. §1.19) or make your position of record in the application. Alternatively, you may arrange to do any of the preceding

---

[1] The regulations at 37 C.F.R. §1.47 provide:

§ 1.47 Filing when an inventor refuses to sign or cannot be reached.

(a) If a joint inventor refuses to join in an application for patent or cannot be found or reached after diligent effort, the application may be made by the other inventor on behalf of himself or herself and the nonsigning inventor. The oath or declaration in such an application must be accompanied by a petition including proof of the pertinent facts, the fee set forth in §1.17(h), and the last known address of the nonsigning inventor. The nonsigning inventor may subsequently join in the application by filing an oath or declaration complying with §1.63.

(b) Whenever all of the inventors refuse to execute an application for patent, or cannot be found or reached after diligent effort, a person to whom an inventor has assigned or agreed in writing to assign the invention, or who otherwise shows sufficient proprietary interest in the matter justifying such action, may make application for patent on behalf of and as agent for all the inventors. The oath or declaration in such an application must be accompanied by a petition including proof of the pertinent facts, a showing that such action is necessary to preserve the rights of the parties or to prevent irreparable damage, the fee set forth in §1.17(h), and the last known address of all of the inventors. An inventor may subsequently join in the application by filing an oath or declaration complying with §1.63.

© The Office will send notice of the filing of the application to all inventors who have not joined in the application at the address(es) provided in the petition under this section, and publish notice of the filing of the application in the *Official Gazette*. The Office may dispense with this notice provision in a continuation or divisional application, if notice regarding the filing of the prior application was given to the nonsigning inventor(s).

[47 Fed. Reg. 41275, Sept. 17, 1982, effective Oct. 1, 1982; 48 Fed. Reg. 2709, Jan. 20, 1983, effective Feb. 27, 1983; revised, 62 Fed. Reg. 53131, Oct. 10, 1997, effective Dec. 1, 1997; revised, 65 Fed. Reg. 54604, Sept. 8, 2000, effective Nov. 7, 2000]

through a registered patent attorney or agent presenting written authorization from you. If you care to join the application, counsel of record (see below) would presumably assist you. Joining in the application would entail the filing of an appropriate oath or declaration by you pursuant to 37 C.F.R. §1.63.

Requests for information regarding your application should be directed to the File Information Unit at (703) 308-2733.

Information regarding how to pay for and order a copy of the application, or a specific paper in the application, should be directed to Certification Division at (703) 308-9726 or toll-free: (800) 972-6382 (outside the Washington D.C. area).

While telephone inquiries regarding this decision may be directed to the undersigned at (571) 272-3214, it is noted that all practice before the Office is in writing (see: 37 C.F.R. §1.2[2]) and the proper authority for action on any matter in this regard are the statutes (35 U.S.C.), regulations (37 C.F.R.) and the commentary on policy (MPEP). Therefore, no telephone discussion may be controlling or considered authority for Petitioner's/Caller's action(s).

John J. Gillon, Jr.
Senior Attorney
Office of Petitions

Counsel of Record:
BRACEWELL & GIULIANI LLP
P.O. BOX 61389
HOUSTON TX 77208-1389

---

[2] The regulations at 37 C.F.R. §1.2 provide:
§1.2 Business to be transacted in writing.
All business with the Patent and Trademark Office should be transacted in writing.The personal attendance of applicants or their attorneys or agents at the Patent and Trademark Office is unnecessary. The action of the Patent and Trademark Office will be based exclusively on the written record in the Office. No attention will be paid to any alleged oral promise, stipulation,or understanding in relation to which there is disagreement or doubt.

UNITED STATES PATENT AND TRADEMARK OFFICE

Commissioner for Patents
United States Patent and Trademark Office
P.O. Box 1450
Alexandria, VA 22313-1450
www.uspto.gov

Wilson Sonsini Goodrich & Rosati
650 Page Mill Road
Palo Alto, CA 94304-1050

COPY MAILED
SEP 0 6 2006
OFFICE OF PETITIONS

In re Application of	:	
Robert I. Henkin	:	
Application No. 11/415,942	:	DECISION ON PETITION
Filed: May 1, 2006	:	TO MAKE SPECIAL UNDER
Attorney Docket No. 28603-701.201	:	37 CFR 1.102(c)(1)
	:	

This is a decision on the petition under 37 CFR 1.102(c)(1), filed July 24, 2006, to make the above-identified application special based on applicant's age as set forth in M.P.E.P. § 708.02, Section IV.

The petition is **GRANTED**.

A grantable petition to make an application special under 37 CFR 1.102(c)(1) and MPEP § 708.02, Section IV: Applicant's Age, must be accompanied by evidence showing that at least one of the applicants is 65 years of age, or more, such as a birth certificate or a statement by applicant. No fee is required.

The instant petition includes a statement from the applicant, Robert L. Henkin, stating that he is 65 years or older. Accordingly, the above-identified application has been accorded "special" status.

Telephone inquiries concerning this decision should be directed to Terri Williams at 571-272-2991.

All other inquiries concerning either the examination or status of the application should be directed to the Technology Center.

The application is being forwarded to the Technology Center Art Unit 1634 for action on the merits commensurate with this decision.

David Bucci
Petitions Examiner
Office of Petitions

UNITED STATES PATENT AND TRADEMARK OFFICE

Commissioner for Patents
United States Patent and Trademark Office
P.O. Box 1450
Alexandria, VA 22313-1450
www.uspto.gov

Beyer Weaver LLP
P.O. Box 70250
Oakland, CA 94612-0250

COPY MAILED

JUL 0 1 2008

OFFICE OF PETITIONS

In re Application of	:	
Kazuharu Aoki	:	
Application No. 11/415,942	:	DECISION ON PETITION
Filed: June 12, 2006	:	TO WITHDRAW
Attorney Docket No. ALPSP259	:	FROM RECORD
	:	

This is a decision on the Request to Withdraw as attorney or agent of record under 37 C.F.R. § 1.36(b), filed February 12, 2008.

The request is **NOT APPROVED** because it is moot.

A review of the file record indicates that the power of attorney to Beyer Weaver LLP has been revoked by the assignee of the patent application on March 30, 2008. Accordingly, the request to withdraw under 37 C.F.R. § 1.36(b) is moot.

All future communications from the Office will continue to be directed to the below-listed address until otherwise notified by applicant.

Telephone inquires concerning this decision should be directed to Terri Williams at 571-272-2991.

Terri Williams
Petitions Examiner
Office of Petitions

cc: **Beyer Law Group LLP**
P.O. Box 1687
Cupertino, CA 95015-1687

UNITED STATES PATENT AND TRADEMARK OFFICE

UNITED STATES DEPARTMENT OF COMMERCE
United States Patent and Trademark Office
Address: COMMISSIONER FOR PATENTS
P.O. Box 1450
Alexandria, Virginia 22313-1450
www.uspto.gov

FISH & RICHARDSON P.C.
PO BOX 1022
MINNEAPOLIS, MN 55440-1022

Mail Date: 04/20/2010

Applicant	: Alan C. Strohm	: DECISION ON REQUEST FOR
Patent Number	: 7653617	: RECALCULATION of PATENT
Issue Date	: 01/26/2010	: TERM ADJUSTMENT IN VIEW
Appliction No	: 11/415,947	: OF WYETH AND NOTICE OF INTENT TO
Filed	: 05/01/2006	: ISSUE CERTIFICATE OF CORRECTION
		:

The Request for Recalculation is **GRANTED** to the extent indicated.

The patent term adjustment has been determined to be **96** days. The USPTO will *sua sponte* issue a certificate of correction reflecting the amount of PTA days determined by the recalculation.

Prior to the issuance of the certificate of correction, the USPTO will afford patentee an opportunity to be heard and request reconsideration. Accordingly, patentee has **one month or thirty (30) days**, whichever is longer, to file a request for reconsideration of this patent term adjustment calculation. See 35 U.S.C. 154(b)(3)(B)(ii) and 37 CFR 1.322(a)(4). No extensions of time will be granted under 37 CFR 1.136.

Patentee should use document code PET.OP if electronically filing a request for reconsideration of this patent term adjustment calculation. The patentee must also include the information required by 37 CFR 1.705(b)(2) and the fee required by 37 CFR 1.18(e). If patentee does not file a timely request for reconsideration of this patent term adjustment calculation including the information required by 37 CFR 1.705(b)(2) and the fee required by 37 CFR 1.18(e), the USPTO will issue a certificate of correction reflecting the PTA determination noted above.

Patentee should be aware that in order to preserve the right to review in the United States District Court for the District of Columbia of the USPTO patent term adjustment determination, patentee must ensure that he or she also take the steps required under 35 U.S.C. 154(b)(4)(A) in a timely manner. Nothing in the request for recalculation should be construed as providing an alternative time frame for commencing a civil action under 35 U.S.C. 154(b)(4)(A).

Any questions concerning this decision should be directed to the Office of Patent Legal Administration at 571-272-7702.

UNITED STATES PATENT AND TRADEMARK OFFICE

UNITED STATES DEPARTMENT OF COMMERCE
United States Patent and Trademark Office
Address: COMMISSIONER FOR PATENTS
P.O. Box 1450
Alexandria, Virginia 22313-1450
www.uspto.gov

FISH & RICHARDSON P.C.
PO BOX 1022
MINNEAPOLIS, MN 55440-1022

Mail Date: 05/17/2010

Applicant : Alan C. Strohm
Patent Number : 7653617
Issue Date : 01/26/2010
Application No: 11/415,947
Filed : 05/01/2006

: NOTICE CONCERNING IMPROPER
: CALCULATION OF PATENT TERM
: ADJUSTMENT BASED UPON USPTO
: IMPROPERLY MEASURING REDUCTION
: PERIOD UNDER 37 CFR 1.704(c)(10).

The United States Patent and Trademark Office (USPTO) discovered that in processing the recent recalculation decisions mailed in response to patentee's filed Request for Recalculation of Patent Term Adjustment in view of Wyeth, the USPTO improperly measured the reduction period for reductions under 37 CFR 1.704(c)(10). Pursuant to 37 CFR 1.704(c)(10), patentee's reduction begins on the date of filing the amendment under 37 CFR 1.312 ("1.312 amendment") or other related paper and ends on the date that the Office mails a response to the filing of the 1.312 amendment or other paper. It has been discovered that during the recalculation, the calculation failed to the limit the reduction to the mail date of the response to the 1.312 amendment or other paper. Accordingly, patentee's reductions were greater than warranted.

This notice **VACATES** the previous GRANTED request for recalculation and provides patentee with a revised GRANTED recalculation.

The patent term adjustment has been determined to be **138** days. The USPTO will *sua sponte* issue a certificate of correction reflecting the amount of patent term adjustment (PTA) days determined by the recalculation.

Prior to the issuance of the certificate of correction, the USPTO will afford patentee an opportunity to be heard and request reconsideration. Accordingly, patentee has **one month or thirty (30) days** from the mail date of this notice, whichever is longer, to file a request for reconsideration of this PTA calculation. See 35 U.S.C. § 154(b)(3)(B)(ii) and 37 CFR 1.322(a)(4).

Patentee should use document code PET.OP if electronically filing a request for reconsideration of this PTA calculation. The patentee must also include the information required by 37 CFR 1.705(b)(2), and the fee required by 37 CFR 1.18(e). If patentee does not file a timely request for reconsideration of this PTA calculation, including the information required by 37 CFR 1.705(b)(2) and the fee required by 37 CFR 1.18(e), the USPTO will issue a certificate of correction reflecting the PTA determination noted above.

Patentee should be aware that in order to preserve the right of review of the USPTO's PTA determination in the United States District Court for the District of Columbia, patentee must ensure that the steps required under 35 U.S.C. § 154 (b)(4) are taken in a timely manner. Nothing in the request for recalculation should be construed as providing an alternative time frame for commencing a civil action under 35 U.S.C. § 154(b)(4).

UNITED STATES PATENT AND TRADEMARK OFFICE

COMMISSIONER FOR PATENTS
UNITED STATES PATENT AND TRADEMARK OFFICE
P.O. BOX 1450
ALEXANDRIA, VA 22313-1450
www.uspto.gov

SUGHRUE MION, PLLC
2100 PENNSYLVANIA AVENUE, N.W.
SUITE 800
WASHINGTON DC 20037

COPY MAILED

MAY 28 2008

OFFICE OF PETITIONS

Applicant: Kelly et al.
Appl. No.: 11/415,950
Filing Date: May 1, 2006
Title: THERAPEUTIC METHODS AND COMPOSITIONS INVOLVING ISOFLAVONES
Attorney Docket No.: Q105391
Pub. No.: US 2006/0286150-A1
Pub. Date: December 21, 2006

This is a decision on the request for a corrected patent application publication under 37 CFR 1.221(b), received on February 21, 2007, for the above-identified application.

The request is DISMISSED.

Applicant requests that the application be republished because typographical errors appear in some of the text and chemical structures on pages 1, 3, 7, 12, 13 and 16 of the specification in the patent application publication.

37 CFR 1.221(b) is applicable "only when the Office makes a material mistake which is apparent from Office records. Any request for a corrected or revised patent application publication other than as provided in paragraph (a) of this section must be filed within two months from the date of the patent application publication. This period is not extendable." A material mistake must affect the public's ability to appreciate the technical disclosure of the patent application publication, to determine the scope of the patent application publication, or to determine the scope of the provisional rights that an applicant may seek to enforce upon issuance of a patent (*e.g.*, error in the claims, serious error in a portion of the written description or drawings that is necessary to support the claims). [1]

The instant request does not identify a material mistake in the publication made by the Office under 37 CFR 1.221(b) with respect to the typographical errors in the specification. The errors do not affect the public's ability to appreciate the technical disclosure of the patent application publication, determine the scope of the patent application publication, or determine the scope of the provisional rights that an applicant may seek to enforce upon issuance of a patent. The instant request does not identify an error with respect to line 1, paragraph [0013] of the publication, as the subscript "E" does not appear on line 14, page 2 of the as-filed specification.

[1] Changes to Implement Eighteen-Month Publication of Patent Applications, 65 FR 57023, 57038 (Sept. 20, 2000), 1239, Off. Gaz. Pat. Office Notices 63, 75 (Oct. 10, 2000) (final rule).

Some of the text may not have been printed correctly due to the quality of the text, some of which (the subscripts) is not clear due to the size and poor printing. Small text, which is also poorly printed is difficult to read and to electronically reproduce by digital imaging and optical character recognition. See 37 CFR 1.52.

To avoid such errors due to poor quality text, Applicant may want to file application papers that are clearer. Applicant has been advised to file applications having cleaner and larger text with sufficient clarity and contrast to permit reproduction, such as electronic reproduction by digital imaging and optical character recognition, which will avoid errors in the patent application publication process. See 37 CFR 1.52.

It would greatly benefit the Office if **applicant did not provide copies of papers**, which were previously submitted, and/or **complete copies of the pre-grant publication**, as it unnecessarily increases the cost to the Office. See 37 CFR 1.4(b). A request for corrected publication need only point out what was printed incorrectly in the application, where the error occurs in the publication and where the correct text or drawing is found in the application papers. Marked up relevant copies of the applications papers and the pre-grant publication may facilitate processing of the request, where it is not readily apparent where the error occurs. If it is not clear why the error is a material error, further explanation may be warranted.

Applicant is advised that a "request for republication of an application previously published" may be filed under 37 CFR 1.221(a). Such a request for republication "must include a copy of the application in compliance with the Office electronic filing system requirements and be accompanied by the publication fee set forth in § 1.18(d) and the processing fee set forth in § 1.17(i)." If the request for republication does not comply with the electronic filing system requirements, the republication will not take place and the publication fee set forth in § 1.18(d) will be refunded. The processing fee will be retained.

Any request for republication under 37 CFR 1.221(a) must be submitted via the EFS system as a "Pre-Grant Publication" and any questions or request for reconsideration of the decision should be addressed as follows:

By mail to: Mail Stop PGPUB
Commissioner for Patents
P.O. Box 1450
Alexandria, Va. 22313-1450

By facsimile: 571-273-8300

Inquiries relating to this matter may be directed to Mark Polutta at (571) 272-7709.

Mark Polutta
Senior Legal Advisor
Office of Patent Legal Administration
Office of the Deputy Commissioner
for Patent Examination Policy

UNITED STATES PATENT AND TRADEMARK OFFICE

COMMISSIONER FOR PATENTS
UNITED STATES PATENT AND TRADEMARK OFFICE
P.O. BOX 1450
ALEXANDRIA, VA 22313-1450
www.uspto.gov

Paper No.

MCDERMOTT WILL & EMERY LLP
600 13TH STREET, N.W.
WASHINGTON DC 20005-3096

MAILED

SEP 30 2009

OFFICE OF PETITIONS

In re Application of	:	
Cioffi et al.	:	DECISION ON PETITION
Application No. 11/415,962	:	
Filed: May 1, 2006	:	
Atty Docket No. 069804-0191	:	

This is in response to the RESPONSE TO NOTICE OF OMITTED ITEMS IN NONPROVISIONAL APPLICATION AND PETITION FOR FILING DATE filed October 14, 2008. Applicant requests that the above-identified application be given its original filing date of May 1, 2006, including missing figure 9.

The petition is **DISMISSED**.

If applicant wishes to rely on § 1.57(a)(1) to enter the drawing figure, the petitioner must submit an amendment in compliance with §§ 1.57 and 1.121 within **TWO (2) MONTHS** of the mailing date of this decision. This period is not extendable. See 37 CFR 1.181(f), 37 CFR 1.57(f) and MPEP 608.01(p). This amendment will be considered by the examiner. No petition is required.

Application papers in the above-identified application were deposited on May 1, 2006. However, on August 14, 2008, the Office mailed applicant a NOTICE OF OMITTED ITEM(S) IN A NONPROVISIONAL APPLICATION[1]. Therein applicant was notified that

[1] This Notice replaced the previous NOTICE TO FILE MISSING PARTS OF NONPROVISIONAL APPLICATION mailed May 31, 2006, notifying applicant *inter alia* that the application papers had been accorded a filing date of May 1, 2006; however, figure 9 described in the specification appeared to be omitted

the application had been accorded a filing date of May 1, 2006; however, figure 9 described in the specification appeared to be omitted from the application.

In response, applicant timely filed the instant petition. Applicant petitions to accept the application as deposited but wishes to add Fig. 9 by relying on incorporation by reference under 37 C.F.R. § 1.57. Applicant states that the drawing figure was not included on filing, but does not state that the figure was inadvertently omitted. Further, applicant states that the above-identified application is a continuation application of USP application No. 11/175,752 (now USP No. 7,038,536) and claims priority to the parent application in accordance with 37 C.F.R. § 1.78. Applicant notes that the claim of priority was set forth in the transmittal sheet provided with the filing of the application and in the preliminary amendment filed concurrently with the application. Applicant further states that as is clear from USP No. 7,038,536, Fig. 9 was provided as part of the parent application.

37 CFR § 1.57 provides that:

> (a) Subject to the conditions and requirements of this paragraph, if all or a portion of the specification or drawing(s) is inadvertently omitted from an application, but the application contains a claim under § 1.55 for priority of a prior-filed foreign application, or a claim under § 1.78 for the benefit of a prior-filed provisional, nonprovisional, or international application, that was present on the filing date of the application, and the inadvertently omitted portion of the specification or drawing(s) is completely contained in the prior-filed application, the claim under § 1.55 or § 1.78 shall also be considered an incorporation by reference of the prior-filed application as to the inadvertently omitted portion of the specification or drawing(s).
>
> (1) The application must be amended to include the inadvertently omitted portion of the specification or

---

from the application. This Notice set a two month time limit for reply, with extensions of time obtainable under 37 CFR 1.136(a). On June 12, 2006, applicant submitted figure 9. No amendment, as required by 37 CFR 1.57(a)(1), was submitted to amend the application to include the figure.

> drawing(s) within any time period set by the Office, but in no case later than the close of prosecution as defined by § 1.114(b), or abandonment of the application, whichever occurs earlier. The applicant is also required to:
>
> (i) Supply a copy of the prior-filed application, except where the prior-filed application is an application filed under 35 U.S.C. 111;
>
> (ii) Supply an English language translation of any prior-filed application that is in a language other than English; and
>
> (iii) Identify where the inadvertently omitted portion of the specification or drawings can be found in the prior-filed application.
>
> …(3) If an application is not otherwise entitled to a filing date under § 1.53(b), the amendment must be by way of a petition pursuant to this paragraph accompanied by the fee set forth in § 1.17(f).

A review of the application as filed confirms that on filing it included a preliminary amendment amending the specification to add the claim under § 1.78 for the benefit of prior-filed nonprovisional application No. 11/175,752.[2] Applicant states that the omitted figure is in this prior application and was not included in this application on filing. Accordingly, this application may be amended to include omitted drawing figure 9 and maintain a filing date of May 1, 2006. However, no petition is necessary for this purpose as this application is entitled to a filing date of May 1, 2006 notwithstanding the incorporation by reference of figure 9 pursuant to 37 CFR 1.57(a).

As stated in the MPEP 201.06(c),

> If a continuation or divisional application as originally filed on or after September 21, 2004 does not include an explicit incorporation by reference statement and is entitled to a filing date despite the inadvertent omission of a portion of the prior application(s), applicant may be

[2] Applicant is reminded that the reference required by this paragraph must be included in an application data sheet (§ 1.76), or the specification must contain or be amended to contain such reference in the first sentence(s) following the title.

permitted to add the omitted material by way of an amendment under 37 CFR 1.57(a).

In sum, when an application is entitled to a filing date, and the omitted material is present in an application incorporated by reference on filing or to which a benefit or priority claim was made on filing, applicant need not file a petition. Rather, within the time period for reply (or within such other time as set by the Office) applicant should submit an amendment (based on the express incorporation by reference or pursuant to 37 CFR 1.57(a)(1)) adding the omitted material.

Unfortunately, applicant has not provided an amendment to enter the drawing figure under 37 CFR 1.57(a) as required by the rules. Applicant also does not state that the omission of the drawing figure was inadvertent. Applicant is reminded that if applicant submits an amendment to add the omitted material pursuant to 37 CFR 1.57(a), it would constitute a certification under 37 CFR 10.18(b) that the omission was inadvertent.

Receipt of the petition fee is acknowledged. The $400 petition fee is required and will not be refunded. Applicant filed this petition due to their filing error in omitting figure 9 described in the specification.

The application will retain a filing date of May 1, 2006, without figure 9.

The application with a filing date of May 1, 2006 is being forwarded to Technology Center AU 2817 for examination in due course.

Telephone inquiries concerning this matter may be directed to Senior Petitions Attorney, Nancy Johnson at (571) 272-3219.

Anthony Knight
Supervisory Petitions Examiner
Office of Petitions

UNITED STATES PATENT AND TRADEMARK OFFICE

Commissioner for Patents
United States Patent and Trademark Office
P.O. Box 1450
Alexandria, VA 22313-1450
www.uspto.gov

MBHB/TRADING TECHNOLOGIES
300 South Wacker Drive
Suite 3200
Chicago, IL 60606

MAILED
JUN 30 2010
OFFICE OF PETITIONS

Applicant: Mark W. Triplett	:	DECISION ON REQUEST FOR
Patent Number: Not Yet Available	:	RECALCULATION of PATENT
Issue Date: Not Yet Available	:	TERM ADJUSTMENT IN VIEW OF
Application No. 11/415,967	:	WYETH
Filed: May 2, 2006	:	

The Applicant's Request for Recalculation is **DISMISSED AS PREMATURE**. Applicant has filed the request based upon the USPTO determination that is provided to applicant in the notice of allowance.

The USPTO does not calculate and inform the applicant of the patent term adjustment based upon the three-year pendency provision of 35 U.S.C. § 154(b)(1)(B) or the overlapping provision in 35 USC § 154(b)(2)(A) in the notice of allowance because the USPTO must know the date the patent will issue to be able to calculate the patent term adjustment based upon these provisions. Accordingly, the USPTO does not determine the amount of "B" delay or the amount of overlap as required by Wyeth until the USPTO establishes a grant date.

Thus, reconsideration of the patent term adjustment indicated in the patent as it relates to the three-year pendency provision of 35 U.S.C. § 154(b)(1)(B) and any overlap pursuant to 35 USC § 154(b)(2)(A) are not considered matters that could have been raised in an application for patent term adjustment under 37 CFR 1.705(b)(provides for reconsideration of the patent term adjustment indicated in the notice of allowance). Therefore, a request for reconsideration of the patent term adjustment calculation based on the three-year pendency provision of 35 U.S.C. § 154(b)(1)(B) and the overlapping provision of 35 USC § 154(b)(2)(A) will be considered timely filed if filed within two months of the issue date of the patent.

Applicant may file a reply to this decision dismissing the Request for Recalculation. Applicant must file such reply within one month or thirty days, whichever is longer, of the mail date of the decision dismissing the Request for Recalculation. No fee is required if patentee is asserting in the reply that the dismissal for ineligibility is improper.

Applicant should use document code PET.OP if electronically filing a reply to this dismissal. If the USPTO finds that the request was improperly deemed ineligible, the USPTO will mail applicant a recalculation determination.

Applicant should be aware that in order to preserve the right to review in the United States District Court for the District of Columbia of the USPTO patent term adjustment determination, patentee must ensure that he or she also take the steps required under 35 U.S.C. § 154(b)(4)(A). Nothing in the request for recalculation should be construed as providing an alternative time frame for commencing a civil action under 35 U.S.C. § 154(b)(4)(A).

Any questions concerning this decision should be directed to the Office of Patent Legal Administration at 571-272-7702.

Ramesh Krishnamurthy

Ramesh Krishnamurthy
Petitions Examiner
Office of Petitions

UNITED STATES PATENT AND TRADEMARK OFFICE

UNITED STATES DEPARTMENT OF COMMERCE
United States Patent and Trademark Office
Address: COMMISSIONER FOR PATENTS
P.O. Box 1450
Alexandria, Virginia 22313-1450
www.uspto.gov

KNOBBE MARTENS OLSON & BEAR LLP
2040 MAIN STREET
FOURTEENTH FLOOR
IRVINE, CA 92614

Mail Date: 04/20/2010

Applicant	: Thomas F. Fangrow	: DECISION ON REQUEST FOR
Patent Number	: 7569043	: RECALCULATION of PATENT
Issue Date	: 08/04/2009	: TERM ADJUSTMENT IN VIEW
Appliction No	: 11/415,969	: OF WYETH AND NOTICE OF INTENT TO
Filed	: 05/02/2006	: ISSUE CERTIFICATE OF CORRECTION
		:

The Request for Recalculation is **GRANTED** to the extent indicated.

The patent term adjustment has been determined to be **0** days. The USPTO will *sua sponte* issue a certificate of correction reflecting the amount of PTA days determined by the recalculation.

Prior to the issuance of the certificate of correction, the USPTO will afford patentee an opportunity to be heard and request reconsideration. Accordingly, patentee has **one month or thirty (30) days**, whichever is longer, to file a request for reconsideration of this patent term adjustment calculation. See 35 U.S.C. 154(b)(3)(B)(ii) and 37 CFR 1.322(a)(4). No extensions of time will be granted under 37 CFR 1.136.

Patentee should use document code PET.OP if electronically filing a request for reconsideration of this patent term adjustment calculation. The patentee must also include the information required by 37 CFR 1.705(b)(2) and the fee required by 37 CFR 1.18(e). If patentee does not file a timely request for reconsideration of this patent term adjustment calculation including the information required by 37 CFR 1.705(b)(2) and the fee required by 37 CFR 1.18(e), the USPTO will issue a certificate of correction reflecting the PTA determination noted above.

Patentee should be aware that in order to preserve the right to review in the United States District Court for the District of Columbia of the USPTO patent term adjustment determination, patentee must ensure that he or she also take the steps required under 35 U.S.C. 154(b)(4)(A) in a timely manner. Nothing in the request for recalculation should be construed as providing an alternative time frame for commencing a civil action under 35 U.S.C. 154(b)(4)(A).

Any questions concerning this decision should be directed to the Office of Patent Legal Administration at 571-272-7702.

UNITED STATES PATENT AND TRADEMARK OFFICE

UNITED STATES DEPARTMENT OF COMMERCE
United States Patent and Trademark Office
Address: COMMISSIONER FOR PATENTS
P.O. Box 1450
Alexandria, Virginia 22313-1450
www.uspto.gov

KNOBBE MARTENS OLSON & BEAR LLP
2040 MAIN STREET
FOURTEENTH FLOOR
IRVINE, CA 92614

Mail Date: 05/17/2010

Applicant	: Dee E. Warren	: DECISION ON REQUEST FOR
Patent Number	: 7654995	: RECALCULATION of PATENT
Issue Date	: 02/02/2010	: TERM ADJUSTMENT IN VIEW
Application No	: 11/415,971	: OF WYETH AND NOTICE OF INTENT TO
Filed	: 05/02/2006	: ISSUE CERTIFICATE OF CORRECTION
		:

The Request for Recalculation is **GRANTED** to the extent indicated.

The patent term adjustment has been determined to be **0** days. The USPTO will *sua sponte* issue a certificate of correction reflecting the amount of PTA days determined by the recalculation.

Prior to the issuance of the certificate of correction, the USPTO will afford patentee an opportunity to be heard and request reconsideration. Accordingly, patentee has **one month or thirty (30) days**, whichever is longer, to file a request for reconsideration of this patent term adjustment calculation. See 35 U.S.C. 154(b)(3)(B)(ii) and 37 CFR 1.322(a)(4). No extensions of time will be granted under 37 CFR 1.136.

Patentee should use document code PET.OP if electronically filing a request for reconsideration of this patent term adjustment calculation. The patentee must also include the information required by 37 CFR 1.705(b)(2) and the fee required by 37 CFR 1.18(e). If patentee does not file a timely request for reconsideration of this patent term adjustment calculation including the information required by 37 CFR 1.705(b)(2) and the fee required by 37 CFR 1.18(e), the USPTO will issue a certificate of correction reflecting the PTA determination noted above.

Patentee should be aware that in order to preserve the right to review in the United States District Court for the District of Columbia of the USPTO patent term adjustment determination, patentee must ensure that he or she also take the steps required under 35 U.S.C. 154(b)(4)(A) in a timely manner. Nothing in the request for recalculation should be construed as providing an alternative time frame for commencing a civil action under 35 U.S.C. 154(b)(4)(A).

Any questions concerning this decision should be directed to the Office of Patent Legal Administration at 571-272-7702.

UNITED STATES PATENT AND TRADEMARK OFFICE

UNITED STATES DEPARTMENT OF COMMERCE
United States Patent and Trademark Office
Address: COMMISSIONER FOR PATENTS
P.O. Box 1450
Alexandria, Virginia 22313-1450
www.uspto.gov

KNOBBE MARTENS OLSON & BEAR LLP
2040 MAIN STREET
FOURTEENTH FLOOR
IRVINE, CA 92614

Mail Date: 05/17/2010

Applicant	: Thomas F. Fangrow	: DECISION ON REQUEST FOR
Patent Number	: 7645271	: RECALCULATION of PATENT
Issue Date	: 01/12/2010	: TERM ADJUSTMENT IN VIEW
Application No	: 11/415,978	: OF WYETH AND NOTICE OF INTENT TO
Filed	: 05/02/2006	: ISSUE CERTIFICATE OF CORRECTION
		:

The Request for Recalculation is **GRANTED** to the extent indicated.

The patent term adjustment has been determined to be **0** days. The USPTO will *sua sponte* issue a certificate of correction reflecting the amount of PTA days determined by the recalculation.

Prior to the issuance of the certificate of correction, the USPTO will afford patentee an opportunity to be heard and request reconsideration. Accordingly, patentee has **one month or thirty (30) days**, whichever is longer, to file a request for reconsideration of this patent term adjustment calculation. See 35 U.S.C. 154(b)(3)(B)(ii) and 37 CFR 1.322(a)(4). No extensions of time will be granted under 37 CFR 1.136.

Patentee should use document code PET.OP if electronically filing a request for reconsideration of this patent term adjustment calculation. The patentee must also include the information required by 37 CFR 1.705(b)(2) and the fee required by 37 CFR 1.18(e). If patentee does not file a timely request for reconsideration of this patent term adjustment calculation including the information required by 37 CFR 1.705(b)(2) and the fee required by 37 CFR 1.18(e), the USPTO will issue a certificate of correction reflecting the PTA determination noted above.

Patentee should be aware that in order to preserve the right to review in the United States District Court for the District of Columbia of the USPTO patent term adjustment determination, patentee must ensure that he or she also take the steps required under 35 U.S.C. 154(b)(4)(A) in a timely manner. Nothing in the request for recalculation should be construed as providing an alternative time frame for commencing a civil action under 35 U.S.C. 154(b)(4)(A).

Any questions concerning this decision should be directed to the Office of Patent Legal Administration at 571-272-7702.

UNITED STATES PATENT AND TRADEMARK OFFICE

UNITED STATES DEPARTMENT OF COMMERCE
United States Patent and Trademark Office
Address: COMMISSIONER FOR PATENTS
P.O. Box 1450
Alexandria, Virginia 22313-1450
www.uspto.gov

LEFFERT JAY & POLGLAZE, P.A.
P.O. BOX 581009
MINNEAPOLIS, MN 55458-1009

Mail Date: 04/20/2010

Applicant	: Girolamo Gallo	: DECISION ON REQUEST FOR
Patent Number	: 7635991	: RECALCULATION of PATENT
Issue Date	: 12/22/2009	: TERM ADJUSTMENT IN VIEW
Appliction No	: 11/415,980	: OF WYETH AND NOTICE OF INTENT TO
Filed	: 05/02/2006	: ISSUE CERTIFICATE OF CORRECTION
		:

The Request for Recalculation is **GRANTED** to the extent indicated.

The patent term adjustment has been determined to be **78** days. The USPTO will *sua sponte* issue a certificate of correction reflecting the amount of PTA days determined by the recalculation.

Prior to the issuance of the certificate of correction, the USPTO will afford patentee an opportunity to be heard and request reconsideration. Accordingly, patentee has **one month or thirty (30) days**, whichever is longer, to file a request for reconsideration of this patent term adjustment calculation. See 35 U.S.C. 154(b)(3)(B)(ii) and 37 CFR 1.322(a)(4). No extensions of time will be granted under 37 CFR 1.136.

Patentee should use document code PET.OP if electronically filing a request for reconsideration of this patent term adjustment calculation. The patentee must also include the information required by 37 CFR 1.705(b)(2) and the fee required by 37 CFR 1.18(e). If patentee does not file a timely request for reconsideration of this patent term adjustment calculation including the information required by 37 CFR 1.705(b)(2) and the fee required by 37 CFR 1.18(e), the USPTO will issue a certificate of correction reflecting the PTA determination noted above.

Patentee should be aware that in order to preserve the right to review in the United States District Court for the District of Columbia of the USPTO patent term adjustment determination, patentee must ensure that he or she also take the steps required under 35 U.S.C. 154(b)(4)(A) in a timely manner. Nothing in the request for recalculation should be construed as providing an alternative time frame for commencing a civil action under 35 U.S.C. 154(b)(4)(A).

Any questions concerning this decision should be directed to the Office of Patent Legal Administration at 571-272-7702.

UNITED STATES PATENT AND TRADEMARK OFFICE

Commissioner for Patents
United States Patent and Trademark Office
P.O. Box 1450
Alexandria, VA 22313-1450
www.uspto.gov

HAMILTON BROOK SMITH & REYNOLDS PC
530 VIRGINIA ROAD
P.O. BOX 9133
CONCORD, MA 01742-9133

COPY MAILED

JUL 0 9 2007

OFFICE OF PETITIONS

In re Application of	:	
KILGORE, Brian	:	
Application No. 11/415,985	:	DECISION ON PETITION
Filed: May 2, 2006	:	TO WITHDRAW
Attorney Docket No. **2479.1091-001**	:	FROM RECORD
	:	

This is a decision on the Request to Withdraw as attorney or agent of record under 37 C.F.R. § 1.36(b), filed December 11, 2006.

The request is **NOT APPROVED** as moot.

A review of the file record indicates that the power of attorney to HAMILTON BROOK SMITH & REYNOLDS PC has been revoked by the assignee of the patent application on March 16, 2007. Accordingly, the request to withdraw under 37 C.F.R. § 1.36(b) is moot.

All future communications from the Office will continue to be directed to the below-listed address until otherwise notified by applicant.

Telephone inquires concerning this decision should be directed to the undersigned at 571-272-7253.

Monica A. Graves
Petitions Examiner
Office of Petitions

cc: **VOLPE AND KOENIG, P.C.**
DEPT. ICC
UNITED PLAZA, SUITE 1600
30 SOUTH 17TH STREET
PHILADELPHIA PA 19103

UNITED STATES PATENT AND TRADEMARK OFFICE

Commissioner for Patents
United States Patent and Trademark Office
P.O. Box 1450
Alexandria, VA 22313-1450
www.uspto.gov

COPY MAILED

JAN 0 5 2007

OFFICE OF PETITIONS

WILLIAMS, MORGAN & AMERSON
10333 RICHMOND, SUITE 1100
HOUSTON TX 77042

In re Application of	:	
Rainer Walter Bachl et al	:	
Application No. 11/415,993	:	DECISION ON PETITION
Filed: May 1, 2006	:	
Attorney Docket No. 2100.031400	:	

This is a decision on the petition, filed August 14, 2006, to accord the above-identified application a filing date of May 1, 2006, with nine(9) sheets of drawings figures 1-9 as part of the original application disclosure. This petition is properly treated under §1.53(e)(2)[1].

The application was filed on May 1, 2006. However, on June 12, 2006, the Office of Initial Patent Examination (OIPE) mailed a "Notice To File Missing Parts of Nonprovisional Application." Applicant was notified that the application papers had been accorded a filing date; however, figure 9 (nine) appeared to have been omitted from the application.

In response, applicant timely filed the petition. Petitioner asserts that figure 9 (nine) was included with the application when filed. In support thereof, petitioner submits a copy of their return postcard receipt.

A postcard receipt which itemizes and properly identifies the items which are being filed serves as *prima facie* evidence of receipt in the Office of all items listed thereon on the date stamped thereon by the Office. See MPEP 503. A review of petitioner's postcard receipt reveals that: 1) it was date stamped as received in OIPE on May 1, 2006; 2) it specifically identifies the items being filed, including "figure 9 (nine)" and 3) it lacks any annotation of non-receipt of any item denoted on the postcard. Thus, petitioner has shown that the item(s) denoted, including figure 9 (nine), were filed on May 1, 2006 and should be included in the original application papers.

Accordingly, the petition is **GRANTED**.

Given the basis for granting the petition, petitioner may request a refund of this fee by writing to the Office of Finance, Refund. A copy of this decision should accompany petitioner's request.

---

[1] §1.53(e) Failure to meet filing date requirements.
... (2) Any request for review of ... a notification that the original application papers lack a portion of the specification or drawing(s), must be by way of a petition pursuant to this paragraph accompanied by the fee set forth in §1.17(h). In the absence of a timely (§1.181(f)) petition pursuant to this paragraph, the filing date of an application in which the applicant was notified of a filing error pursuant to paragraph (e)(1) of this section will be the date the filing error is corrected.

This application file is being referred to the Office of Initial Patent Examination Division for further **processing with a filing date of May 1, 2006, using the sheet of drawing to include figure 9 (nine) supplied with the instant petition.**

Telephone inquiries concerning this matter may be directed to the undersigned at (571) 272-3208.

Karen Creasy
Petitions Examiner
Office of Petitions

UNITED STATES PATENT AND TRADEMARK OFFICE

Commissioner for Patents
United States Patent and Trademark Office
P.O. Box 1450
Alexandria, VA 22313-1450
www.uspto.gov

GIBSON & DERNIER, LLP
900 ROUTE 9 NORTH
SUITE 504
WOODBRIDGE, NJ 07095

COPY MAILED

JAN 26 2009

OFFICE OF PETITIONS

In re Application of	:	
Terry D. White, et al	:	
Application No. 11/415,994	:	DECISION ON PETITION
Filed: May 2, 2006	:	
Attorney Docket No. 348/4/CONX2	:	

This is a decision on the petition under the unintentional provisions of 37 CFR 1.137(b), filed October 17, 2008, to revive the above-identified application.

There is no indication that the person signing the instant petition was ever given a power of attorney or authorization of agent to prosecute the above-identified application. In accordance with 37 CFR 1.34(a), the signature appearing on the petition shall constitute a representation to the United States Patent and Trademark Office that he/she is authorized to represent the particular party in whose behalf he/she acts. However, if petitioner desires to receive future correspondence regarding this application, the appropriate power of attorney or authorization of agent must be submitted.

It is not apparent whether the statement of unintentional delay was signed by a person who would have been in a position of knowing that the entire delay in filing the required reply from the due date for the reply until the filing of a grantable petition pursuant to 37 CFR 1.137(b) was unintentional. Nevertheless, in accordance with 37 CFR 10.18, the statement is accepted as constituting a certification of unintentional delay. However, in the event that petitioner has no knowledge that the delay was unintentional, petitioner must make such an inquiry to ascertain that, in fact, the delay was unintentional. If petitioner discovers that the delay was intentional, petitioner must so notify the Office.

This application became abandoned for failure to timely pay the issue and publication fees on or before October 16, 2008, as required by the Notice of Allowance and Fee(s) Due, mailed July 16, 2008. Accordingly, the date of abandonment of this application is October 17, 2008.

The petition satisfies the requirements of 37 CFR 1.137(b) in that petitioner has supplied (1) the reply in the form of payment of the issue fee of $755 and the publication fee of $300, (2) the petition fee of $810; and (3) a proper statement of unintentional delay.

The petition is **GRANTED**.

The application file does not indicate a change of address has been filed in this case, although the address given on the petition differs from the address of record. A change of address should be filed in this case in accordance with MPEP 601.03. A courtesy copy of this decision is being mailed to the address noted on the petition. However, until otherwise instructed, all future correspondence regarding this application will be mailed solely to the address of record.

Telephone inquiries concerning this decision should be directed to undersigned at (571) 272-1642.

This application is being referred to the Office of Data Management for processing into a patent.

April M. Wise
Petitions Examiner
Office of Petitions

Cc: JEFFREY I. KAPLAN
KAPLAN, FILMAN & PERGAMENT, LLP
1480 ROUTE 9 NORTH
SUITE 204
WOODBRIDGE, NJ 07095

UNITED STATES PATENT AND TRADEMARK OFFICE

UNITED STATES DEPARTMENT OF COMMERCE
United States Patent and Trademark Office
Address: COMMISSIONER FOR PATENTS
P.O. Box 1450
Alexandria, Virginia 22313-1450
www.uspto.gov

APPLICATION NO.	FILING DATE	FIRST NAMED INVENTOR	ATTORNEY DOCKET NO.	CONFIRMATION NO.
11/415,999	05/02/2006	Mark Brister	DEXCOM.051C3	7368

EXAMINER

7590 11/01/2007
KNOBBE MARTENS OLSON & BEAR LLP
2040 MAIN STREET
FOURTEENTH FLOOR
IRVINE, CA 92614

ART UNIT	PAPER NUMBER
3736	

NOTIFICATION DATE	DELIVERY MODE
11/01/2007	ELECTRONIC

DECISION GRANTING PETITION UNDER 37 CFR 1.138(d)

The declaration of express abandonment is recognized

This is in response to the petition under 37 CFR 1.138(d), requesting for a refund of any previously paid search fee and excess claims fee in the above-identified application.

The petition is granted.

The express abandonment is recognized. Any previously paid search fee and excess claims fee are hereby refunded.

Telephone inquiries should be directed to the Office of Data Management at (571) 272-4200.

Kalitus King

Patent Publication Branch
Office of Data Management

FORM PET651G (Rev. 08/07)

UNITED STATES PATENT AND TRADEMARK OFFICE

COMMISSIONER FOR PATENTS
UNITED STATES PATENT AND TRADEMARK OFFICE
P.O. BOX 1450
ALEXANDRIA, VA 22313-1450
www.uspto.gov

STINSON MORRISON HECKER LLP
F/K/A BLUMENFELD, KAPLAN & SANDWEISS, P.C.
168 NORTH MERAMEC
4TH FLOOR
CLAYTON, MO 63105-3763

COPY MAILED

JAN 29 2008

OFFICE OF PETITIONS

In re Application of
Timothy Hamilton
Application No. 11/416,023
Filed: May 2, 2006
Attorney Docket No. 3301-96298

DECISION GRANTING PETITION
UNDER 37 CFR 1.137(b)

This is a decision on the petition, filed September 28, 2007, which is being treated as a petition under 37 CFR 1.137(b) to revive the instant nonprovisional application for failure to timely notify the U.S. Patent and Trademark (USPTO) of the filing of an application in a foreign country, or under a multinational treaty that requires publication of applications eighteen months after filing. *See* 37 CFR 1.137(f).

The petition is **GRANTED**.

Petitioner indicates that the instant nonprovisional application is the subject of an application filed in an eighteen month publication country on May 1, 2007. However, the USPTO was unintentionally not notified of this filing within 45 days subsequent to the filing of the subject application in an eighteen month publication country.

In view of the above, this application became abandoned pursuant to 35 U.S.C. §122(b)(2)(B)(iii) and 37 CFR 1.213(c) for failure to timely notify the Office of the filing of an application in a foreign country or under a multilateral international agreement that requires publication of applications 18 months after filing.

A petition to revive an application abandoned pursuant to 35 U.S.C. § 122(b)(2)(B)(iii) for failure to notify the USPTO of a foreign filing must be accompanied by:

(1) the required reply which is met by the notification of such filing in a foreign country or under a multinational treaty;
(2) the petition fee as set forth in 37 CFR 1.17(m); and
(3) a statement that the entire delay in filing the required reply from the due date of the reply until the filing of a grantable petition was unintentional.

The petition has been found to be in compliance with 37 CFR 1.137(b). Accordingly, the failure to timely notify the USPTO of a foreign or international filing within 45 days after the date of filing of such foreign or international application as provided by 35 U.S.C. § 122(b)(2)(B)(iii) and 37 CFR 1.213(c) is accepted as having been unintentionally delayed.

The previous Request and Certification under 35 U.S.C. § 122(b)(2)(B)(i) has been rescinded. A Notice Regarding Rescission of Nonpublication Request which sets forth the projected publication date of May 8, 2008 accompanies this decision on petition.

It is noted that the address given on the petition differs from the address of record. If appropriate, a change of address should be filed in accordance with MPEP 601.03. A courtesy copy of this decision is being mailed to the address given on the petition; however, the Office will mail all future correspondence solely to the address of record.

Any inquiries concerning this decision may be directed to the undersigned at (571) 272-3204.

This application is being referred to the Technology Center 3754.

Sherry D. Brinkley
Petitions Examiner
Office of Petitions

ATTACHMENT: Notice Regarding Rescission of Nonpublication Request

cc: MARK C. YOUNG
1201 WALNUT STREET, SUITE 2900
KANSAS CITY, MO 64106-2150

UNITED STATES PATENT AND TRADEMARK OFFICE

UNITED STATES DEPARTMENT OF COMMERCE
United States Patent and Trademark Office
Address: COMMISSIONER FOR PATENTS
P.O. Box 1450
Alexandria, Virginia 22313-1450
www.uspto.gov

APPLICATION NUMBER	FILING OR 371(C) DATE	FIRST NAMED APPLICANT	ATTY. DOCKET NO./TITLE
11/416,023	05/02/2006	Timothy Hamilton	3301-96298

CONFIRMATION NO. 6227

25716
STINSON MORRISON HECKER LLP
F/K/A BLUMENFELD, KAPLAN & SANDWEISS, P.C.
168 NORTH MERAMEC
4TH FLOOR
CLAYTON, MO 63105-3763

NONPUBLICATION RESCISSION LETTER

OC000000027965333

Date Mailed: 01/28/2008

Communication Regarding Rescission Of Nonpublication Request and/or Notice of Foreign Filing

Applicant's rescission of the previously-filed nonpublication request and/or notice of foreign filing is acknowledged. The paper has been reflected in the Patent and Trademark Office's (USPTO's) computer records so that the earliest possible projected publication date can be assigned.

The projected publication date is 05/08/2008.

If applicant rescinded the nonpublication request before or on the date of "foreign filing,"[1] then no notice of foreign filing is required.

If applicant foreign filed the application after filing the above application and before filing the rescission, and the rescission did not also include a notice of foreign filing, then a notice of foreign filing (not merely a rescission) is required to be filed within 45 days of the date of foreign filing. See 35 U.S.C. § 122(b)(2)(B)(iii), and Clarification of the United States Patent and Trademark Office's Interpretation of the Provisions of 35 U.S.C. § 122(b)(2)(B)(ii)-(iv), 1272 Off. Gaz. Pat. Office 22 (July 1, 2003).

If a notice of foreign filing is required and is not filed within 45 days of the date of foreign filing, then the application becomes abandoned pursuant to 35 U.S.C. § 122(b)(2)(B)(iii). In this situation, applicant should either file a petition to revive or notify the Office that the application is abandoned. See 37 CFR 1.137(f). Any such petition to revive will be forwarded to the Office of Petitions for a decision. Note that the filing of the petition will not operate to stay any period of reply that may be running against the application.

Questions regarding petitions to revive should be directed to the Office of Petitions at (571) 272-3282. Questions regarding publications of patent applications should be directed to the patent application publication hotline at (703) 605-4283 or by e-mail pgpub@uspto.gov.

[1] Note, for purpose of this notice, that "foreign filing" means "filing an application directed to the same invention in another country, or under a multilateral international agreement, that requires publication of applications 18 months after filing".

UNITED STATES PATENT AND TRADEMARK OFFICE

Commissioner for Patents
United States Patent and Trademark Office
P.O. Box 1450
Alexandria, VA 22313-1450
www.uspto.gov

HANNAH N. SIVAK
1213 W. SEASCAPE DR
GILBERT AZ 85233

COPY MAILED

AUG 15 2008

OFFICE OF PETITIONS

In re Application of :
Hannah Naomi Sivak et al. :
Application No. 11/416,044 : ON PETITION
Filed: May 2, 2006 :
Title of Invention: **METHOD OF SKIN TREATMENT FOR ROSACEA USING EPIDERMAL GROWTH FACTOR** :

This is a decision on the petition filed November 1, 2007 under 37 CFR 1.137(b), to revive the above-identified application.

The petition is **GRANTED**.

The instant application became abandoned on July 26, 2006, for failure to timely reply to the Notice to File Missing Parts, mailed May 25, 2006, which set a two (2) month shortened statutory period for reply. No extensions of the time for reply in accordance with 37 CFR 1.136(a) were obtained. Accordingly, a Notice of Abandonment was mailed September 14, 2007.

The filing of the response to Notice to File Missing Parts mailed May 25, 2006 is acknowledged.

All other requirements having been met ,The application is being forwarded to the Office of Patent Application Processing for further pre-examination processing.

Telephone inquiries concerning this matter may be directed to the undersigned Petitions Attorney at (571) 272-3212.

Patricia Faison-Ball

Patricia Faison-Ball
Senior Petitions Attorney
Office of Petitions

Docket No. MOR-001-CIP

IN THE UNITED STATES PATENT AND TRADEMARK OFFICE

In re Application of	)	
Charles G. Leonhardt et al.	)	
Serial No. 11/916097	)	Group Art Unit: 1761
Filed: herewith 5-3-06	)	Examiner: Unassigned
For: METHOD AND SYSTEM FOR REMOVING HARMFUL GASES FROM WINES AND OTHER BEVERAGES	)	

Assistant Commissioner of Patents
Washington, D.C. 20231

Sir:

PETITION TO MAKE SPECIAL

Applicant hereby petitions under 37 CFR § 1.102 and §§ 708.01 and 708.02 of the M.P.E.P. to make the above application special on the basis that both applicants are over sixty-five (65) years of age.

As set forth in the attached Declarations, applicant Charles G. Leonhardt presently is eighty-two (82) years old and co-applicant James A. Morabito is eighty-six (86) years old.. In view of the applicants' age and the policy set forth in the pertinent regulations and provisions, it is believed that this petition should be automatically granted.

Applicants understand that no fee is required for this Petition.

Respectfully submitted,

Howard N. Flaxman
Registration No. 34,595

WELSH & FLAXMAN LLC
2000 Duke Street, Suite 100
Alexandria, VA 22314
(703) 920-1122

PETITION GRANTED

William Krynski
Special Program Examiner
Technology Center 1700
JUN 2 1 2006

UNITED STATES PATENT AND TRADEMARK OFFICE

Commissioner for Patents
United States Patent and Trademark Office
P.O. Box 1450
Alexandria, VA 22313-1450
www.uspto.gov

DRINKER BIDDLE & REATH
ATTN: INTELLECTUAL PROPERTY GROUP
ONE LOGAN SQUARE
18TH AND CHERRY STREETS
PHILADELPHIA PA 19103-6996

COPY MAILED

NOV 17 2006

OFFICE OF PETITIONS

In re Application of	:	
Kanbar et al.	:	
Application No. 11/416,114	:	ON PETITION
Filed: May 2, 2006	:	
Attorney Docket No. 47178-0005-00-US	:	

This is a decision on the petition under 37 CFR 1.102(c)(1), filed August 29, 2006, to make the above-identified application special based on applicant's age as set forth in M.P.E.P. § 708.02, Section IV.

The petition is **GRANTED**.

A grantable petition to make an application special under 37 CFR 1.102(c)(1) and MPEP § 708.02, Section IV: Applicant's Age must be accompanied by evidence showing that at least one of the applicants is 65 years of age, or more, such as a birth certificate or a statement by applicant. No fee is required.

The instant petition includes a statement from the applicant, Maurice S. Kanbar. Accordingly, the above-identified application has been accorded "special" status.

Telephone inquiries concerning this decision should be directed to the undersigned at 571-272-3206. All other inquiries concerning either the examination or status of the application should be directed to the Technology Center.

This matter is being referred to the Technology Center Art Unit 1734 for action on the merits commensurate with this decision.

Liana Walsh
Petitions Examiner
Office of Petitions

UNITED STATES PATENT AND TRADEMARK OFFICE

UNITED STATES DEPARTMENT OF COMMERCE
United States Patent and Trademark Office
Address: COMMISSIONER FOR PATENTS
P.O. Box 1450
Alexandria, Virginia 22313-1450
www.uspto.gov

DRINKER BIDDLE & REATH
ATTN: INTELLECTUAL PROPERTY GROUP
ONE LOGAN SQUARE, SUITE 2000
PHILADELPHIA, PA 19103-6996

Mail Date: 04/20/2010

Applicant	: Maurice Kanbar	: DECISION ON REQUEST FOR
Patent Number	: 7637452	: RECALCULATION of PATENT
Issue Date	: 12/29/2009	: TERM ADJUSTMENT IN VIEW
Appliction No	: 11/416,114	: OF WYETH AND NOTICE OF INTENT TO
Filed	: 05/02/2006	: ISSUE CERTIFICATE OF CORRECTION
		:

The Request for Recalculation is **GRANTED** to the extent indicated.

The patent term adjustment has been determined to be **703** days. The USPTO will *sua sponte* issue a certificate of correction reflecting the amount of PTA days determined by the recalculation.

Prior to the issuance of the certificate of correction, the USPTO will afford patentee an opportunity to be heard and request reconsideration. Accordingly, patentee has **one month or thirty (30) days**, whichever is longer, to file a request for reconsideration of this patent term adjustment calculation. See 35 U.S.C. 154(b)(3)(B)(ii) and 37 CFR 1.322(a)(4). No extensions of time will be granted under 37 CFR 1.136.

Patentee should use document code PET.OP if electronically filing a request for reconsideration of this patent term adjustment calculation. The patentee must also include the information required by 37 CFR 1.705(b)(2) and the fee required by 37 CFR 1.18(e). If patentee does not file a timely request for reconsideration of this patent term adjustment calculation including the information required by 37 CFR 1.705(b)(2) and the fee required by 37 CFR 1.18(e), the USPTO will issue a certificate of correction reflecting the PTA determination noted above.

Patentee should be aware that in order to preserve the right to review in the United States District Court for the District of Columbia of the USPTO patent term adjustment determination, patentee must ensure that he or she also take the steps required under 35 U.S.C. 154(b)(4)(A) in a timely manner. Nothing in the request for recalculation should be construed as providing an alternative time frame for commencing a civil action under 35 U.S.C. 154(b)(4)(A).

Any questions concerning this decision should be directed to the Office of Patent Legal Administration at 571-272-7702.

UNITED STATES PATENT AND TRADEMARK OFFICE

UNITED STATES DEPARTMENT OF COMMERCE
United States Patent and Trademark Office
Address: COMMISSIONER FOR PATENTS
P.O. Box 1450
Alexandria, Virginia 22313-1450
www.uspto.gov

KNOBLE, YOSHIDA & DUNLEAVY
EIGHT PENN CENTER
SUITE 1350, 1628 JOHN F KENNEDY BLVD
PHILADELPHIA, PA 19103

Mail Date: 04/21/2010

Applicant	: Wesley Spencer Hawk	: DECISION ON REQUEST FOR
Patent Number	: 7611659	: RECALCULATION of PATENT
Issue Date	: 11/03/2009	: TERM ADJUSTMENT IN VIEW
Appliction No	: 11/416,174	: OF WYETH AND NOTICE OF INTENT TO
Filed	: 05/03/2006	: ISSUE CERTIFICATE OF CORRECTION
		:

The Request for Recalculation is **GRANTED** to the extent indicated.

The patent term adjustment has been determined to be **782** days. The USPTO will *sua sponte* issue a certificate of correction reflecting the amount of PTA days determined by the recalculation.

Prior to the issuance of the certificate of correction, the USPTO will afford patentee an opportunity to be heard and request reconsideration. Accordingly, patentee has **one month or thirty (30) days**, whichever is longer, to file a request for reconsideration of this patent term adjustment calculation. See 35 U.S.C. 154(b)(3)(B)(ii) and 37 CFR 1.322(a)(4). No extensions of time will be granted under 37 CFR 1.136.

Patentee should use document code PET.OP if electronically filing a request for reconsideration of this patent term adjustment calculation. The patentee must also include the information required by 37 CFR 1.705(b)(2) and the fee required by 37 CFR 1.18(e). If patentee does not file a timely request for reconsideration of this patent term adjustment calculation including the information required by 37 CFR 1.705(b)(2) and the fee required by 37 CFR 1.18(e), the USPTO will issue a certificate of correction reflecting the PTA determination noted above.

Patentee should be aware that in order to preserve the right to review in the United States District Court for the District of Columbia of the USPTO patent term adjustment determination, patentee must ensure that he or she also take the steps required under 35 U.S.C. 154(b)(4)(A) in a timely manner. Nothing in the request for recalculation should be construed as providing an alternative time frame for commencing a civil action under 35 U.S.C. 154(b)(4)(A).

Any questions concerning this decision should be directed to the Office of Patent Legal Administration at 571-272-7702.

UNITED STATES PATENT AND TRADEMARK OFFICE

Commissioner for Patents
United States Patent and Trademark Office
P.O. Box 1450
Alexandria, VA 22313-1450
www.uspto.gov

MAILED

JUN 30 2006
Director's Office
Group 3700

John S. Hilton
McGuireWoods LLP
1750 Tysons Boulevard
Suite 1800
McLean, VA 22102-4215

In re Application of: G.L. HUFF Serial No.: 11/416,191 Filed: 3 May 2006 Docket: 2005025-5214US Title: HIGHLY CONTROLLABLE GAS GRILL BURNER SYSTEM	DECISION ON REQUEST FOR PETITION TO MAKE SPECIAL FOR NEW APPLICATION UNDER 37 C.F.R. § 1.102 & M.P.E.P. § 708.02 (VIII)

This is a decision on the petition filed on May 3, 2006 to make the above-identified application special under the accelerated examination procedure set forth in MPEP § 708.02(VIII) and in accordance with 37 C.F.R. § 1.102(d).

The petition to make the application special is **DISMISSED**.

In support of the petition, petitioner provides: a) the applicable fee; b) a statement that all claims are directed towards a single invention; c) a statement that a search has been made on the US PTO database in Class 126, subclasses 41R; and Class 431, Subclasses 278, 284, 285; d) a PTO-1449 IDS listing references considered pertinent; and e) a detailed discussion of the references.

For accelerated examination under MPEP § 708.02(VIII) in accordance with 37 C.F.R. § 1.102(d), a showing of the following is required: a) the applicable petition fee; b) all claims are directed to a single invention, or if the Office determines that all the claims presented are not obviously directed to a single invention, applicant will make an election without traverse; c) a statement that a pre-examination search was made, listing the field of search by class and subclass; d) a copy of each of the references deemed most closely related to the claimed subject matter; and e) a detailed discussion of the references pointing out with the particularity required by 37 CFR 1.111 (b) and (c), how the claimed subject matter is distinguishable over the references.

The requirements of MPEP § 708.02(VIII)(a), (c) and (d) are considered to have been met. However, the petition does not meet the requirements of MPEP § 708.02(VIII)(b) and (e).

MPEP § 708.02(VIII)(b) requires petitioner to state that all claims are directed to a single invention, or if the Office determines that all the claims presented are not obviously directed to a single invention, applicant will make an election without traverse. In the petition, applicant states that all claims are directed to a single invention, but does not state "if the office determines that all presented claims are not obviously directed to a single invention, applicant will make an election without traverse." Because the petition does not have this specific statement, it does not meet the requirements of MPEP § 708.02(VIII)(b).

Regarding the requirement of MPEP § 708.02(VIII)(e), 37 CFR § 1.111 (b) states "[a] general allegation that the claims define a patentable invention without specifically pointing out how the language of the claims patentably distinguishes them from the references does not comply with the requirements of this section." 37 CFR § 1.111 (c) states in part "the applicant or patent owner must clearly point out the patentable novelty which he or she thinks the claims present in view of the state of the art disclosed by the references cited or the objections made." Applicant provides a detailed discussion of each reference cited on the PTO-1449 IDS but does not point out the particular language that distinguishes each of the independent claims 1, 12 and 20. Applicant's repeated general allegation that none of the references "disclose or suggest, in combination, at least a grill having a first set of burners and a second set of burners wherein at least one burner of said first set of burners is interdigitally arranged with burners of said second set of burners together with a first valve that controls a flow of fuel to said first set of burners and a second valve that controls a flow of fuel to said second set of burners. Additionally, Applicants respectfully assert that this patent does not disclose or suggest, in combination, at least a method of arranging a first set of burners in the grill and arranging a second set of burners in the grill, wherein at least one burner of the first set of burners is interdigitally arranged with burners of the second set of burners; and together with connecting the first set of burners to a first valve to control a flow of fuel and connecting a second valve to control a flow of fuel to the second set of burners" runs contrary to 37 CFR § 1.111 (b), which does not allow for general allegations. Rather, each independent claim should be compared with each reference, and the differences between the two must be clearly stated. Because the petition does not point out the specific language in each independent claim that distinguishes over each reference, it fails to meet the requirements of MPEP § 708.02(VIII)(e).

While Technology Center Directors may have granted petitions that do not comply with the detailed discussion requirement of the Accelerated Examination procedure, Technology Center Director decisions on petitions are not binding precedent of the Patent Examining Corps, and the application of an improper standard in certain cases does not require the Office to continue to apply the improper standard in all cases. *See In re The Boulevard Entertainment, Inc.*, 334 F.3d 1336, 1343, 67 USPQ2d 1475, 1480 (Fed. Cir. 2003).

For the above-mentioned reasons, the petition is dismissed. The application will, therefore, be taken up by the examiner for action in its regular turn.

Any request for reconsideration of this decision must be submitted within 2 (two) months of the date of this decision in order to be considered timely. Any request for reconsideration must provide: i) a statement that all claims are directed to a single invention, or if the Office determines that all the claims presented are not obviously directed to a single invention,

applicant will make an election without traverse; and ii) a detailed discussion of each reference that clearly points out the specific language in each independent claim that distinguishes over the reference.

Any inquiry regarding this decision should be directed to Allan Shoap, Special Program Examiner, at (571) 272-4514.

Karen M. Young

Karen M. Young, Director
Technology Center 3700

UNITED STATES PATENT AND TRADEMARK OFFICE

Commissioner for Patents
United States Patent and Trademark Office
P.O. Box 1450
Alexandria, VA 22313-1450
www.uspto.gov

MCGUIREWOODS, LLP
1750 TYSONS BLVD
SUITE 1800
MCLEAN VA 22102

mailed 1/8/07

In re Application of: HUFF, G.L.
Appl. No.: 11/416,191
Filed: May 3, 2006
For: HIGHLY CONTROLLABLE GAS GRILL BURNER SYSTEM

DECISION ON PETITION to make SPECIAL under 37 CFR 1.102

This is a decision on the Aug. 24, 2006 request for reconsideration of the petition filed on May 3, 2006 to make the above-identified application special under the accelerated examination procedure set forth in MPEP § 708.02(VIII) and in accordance with 37 C.F.R. § 1.102(d).

The petition to make the application special is Granted.

The petition has been reviewed and is found to be in compliance with the requirements for special status as set forth in Section 708.02 (VIII) of the Manual of Patent Examining Procedures (MPEP).

Applicant is advised that the examiner's search will be restricted to the subject matter encompassed by the claims. In the event that the application receives a first action rejection, Applicant is encouraged to arrange for an interview with the examiner, and to provide the examiner with a working copy of any proposed amendment one working day prior to the interview. Any amendment filed in response to a first action rejection that would require broadening the field of search will be treated as an improper response. See MPEP 708.02 (VIII) for a full explanation of the handling of applications after petition grant.

Any inquiry regarding this decision should be directed to Henry Yuen at 571-272-4856.

Petition GRANTED

Henry C. Yuen, Special Program Examiner
Technology Center 3700 – Mechanical Engineering, Manufacturing and Products

UNITED STATES PATENT AND TRADEMARK OFFICE

UNITED STATES DEPARTMENT OF COMMERCE
United States Patent and Trademark Office
Address: COMMISSIONER FOR PATENTS
P.O. Box 1450
Alexandria, Virginia 22313-1450
www.uspto.gov

Gowling Lafleur Henderson LLP
Suite 1600 1 First Canadian Place 100 King Street West
Toronto, ON M5X1G5
CANADA

Mail Date: 04/21/2010

Applicant	: Gerhard Dietrich Klassen	: DECISION ON REQUEST FOR
Patent Number	: 7646392	: RECALCULATION of PATENT
Issue Date	: 01/12/2010	: TERM ADJUSTMENT IN VIEW
Appliction No	: 11/416,194	: OF WYETH AND NOTICE OF INTENT TO
Filed	: 05/03/2006	: ISSUE CERTIFICATE OF CORRECTION
		:

The Request for Recalculation is **GRANTED** to the extent indicated.

The patent term adjustment has been determined to be **373** days. The USPTO will *sua sponte* issue a certificate of correction reflecting the amount of PTA days determined by the recalculation.

Prior to the issuance of the certificate of correction, the USPTO will afford patentee an opportunity to be heard and request reconsideration. Accordingly, patentee has **one month or thirty (30) days**, whichever is longer, to file a request for reconsideration of this patent term adjustment calculation. See 35 U.S.C. 154(b)(3)(B)(ii) and 37 CFR 1.322(a)(4). No extensions of time will be granted under 37 CFR 1.136.

Patentee should use document code PET.OP if electronically filing a request for reconsideration of this patent term adjustment calculation. The patentee must also include the information required by 37 CFR 1.705(b)(2) and the fee required by 37 CFR 1.18(e). If patentee does not file a timely request for reconsideration of this patent term adjustment calculation including the information required by 37 CFR 1.705(b)(2) and the fee required by 37 CFR 1.18(e), the USPTO will issue a certificate of correction reflecting the PTA determination noted above.

Patentee should be aware that in order to preserve the right to review in the United States District Court for the District of Columbia of the USPTO patent term adjustment determination, patentee must ensure that he or she also take the steps required under 35 U.S.C. 154(b)(4)(A) in a timely manner. Nothing in the request for recalculation should be construed as providing an alternative time frame for commencing a civil action under 35 U.S.C. 154(b)(4)(A).

Any questions concerning this decision should be directed to the Office of Patent Legal Administration at 571-272-7702.

UNITED STATES PATENT AND TRADEMARK OFFICE

Commissioner for Patents
United States Patent and Trademark Office
P.O. Box 1450
Alexandria, VA 22313-1450
www.uspto.gov

ROGER W. BROWN, PH.D.
810 W. VILLA MARIA DR.
PHOENIX, AZ 85023

COPY MAILED

OCT 26 2007

OFFICE OF PETITIONS

In re Application of	:	
Brown, Roger Wayne	:	
Application No. 11/416,232	:	ON PETITION
Filed: May 3, 2006	:	
Title: APPARATUS TO PRODUCE SPECTRUMS	:	

This is a decision on the petition under 37 C.F.R. § 1.137(b), filed September 24, 2007, to revive the above-identified application.

The petition is **GRANTED.**

The petition satisfies the conditions for revival pursuant to the provisions of 37 CFR 1.137(b) in that (1) the reply in the form of payment of the various claims fees; (2) the petition fee; and (3) the required statement of unintentional delay have been received. Accordingly, the response has been accepted as having been unintentionally delayed.

Office actions are sometimes returned to the Office because the United States Postal Service has not been able to deliver them. Upon receipt of the returned Office action, the Technology Center (TC) technical support staff will check the application file record to ensure that the Office action was mailed to the correct correspondence address. If the Office action was *not* mailed to the correct correspondence address, it should be stamped "remailed" with the remailing date and mailed to the correct correspondence address. The period running against the application begins with the date of remailing. However, after reviewing the instant application file, the Notice to File Missing Parts mailed on June 14, 2006 was mailed to the correct address of record and was never returned to the Office as undeliverable.

Further, 35 U.S.C. 41(a) (7) provides that a petition for the revival of an unintentionally abandoned application or for the unintentionally delayed payment of the issue fee must be accompanied by the petition fee set forth in 37 CFR 1.17(m), unless the petition is filed under 35 U.S.C. 133 or 151 (on the basis of unavoidable delay), in which case the fee is set forth in 37 CFR 1.17(l). Thus, unless the payment of a petition fee to obtain the revival of an abandoned application is a statutory prerequisite to revival of the abandoned application, and cannot be waived.

This matter is being referred to the Office of Initial Patent Examination for further processing.

Telephone inquiries regarding this decision should be directed to the undersigned at (571) 272-3206.

Liana Walsh
Petitions Examiner
Office of Petitions

UNITED STATES PATENT AND TRADEMARK OFFICE

Commissioner for Patents
United States Patent and Trademark Office
P.O. Box 1450
Alexandria, VA 22313-1450
www.uspto.gov

ROGER W. BROWN, PH.D.
810 W. VILLA MARIA DR.
PHOENIX, AZ 85023

COPY MAILED

FEB 29 2008

OFFICE OF PETITIONS

ON PETITION

In re Application of	:
Brown, Roger Wayne	:
Application No. 11/416,232	:
Filed: May 3, 2006	:
Title: Apparatus to Produce Spectrums	:

This is a decision on the petition under 37 CFR 1.102(c)(1), filed February 19, 2008, to make the above-identified application special based on applicant's age as set forth in M.P.E.P. § 708.02, Section IV.

The petition is **GRANTED**.

A grantable petition to make an application special under 37 CFR 1.102(c)(1) and MPEP § 708.02, Section IV: Applicant's Age must be accompanied by evidence showing that at least one of the applicants is 65 years of age, or more, such as a birth certificate or a statement by applicant. No fee is required.

The instant petition includes a statement from the applicant, along with a copy of the applicant's US Passport. Accordingly, the above-identified application has been accorded "special" status.

Telephone inquiries concerning this decision should be directed to the undersigned at 571-272-3206. All other inquiries concerning either the examination or status of the application should be directed to the Technology Center.

This matter is being referred to the Technology Center Art Unit 2877 for action on the merits commensurate with this decision.

Liana Walsh
Petitions Examiner
Office of Petitions

UNITED STATES PATENT AND TRADEMARK OFFICE

COMMISSIONER FOR PATENTS
UNITED STATES PATENT AND TRADEMARK OFFICE
WASHINGTON, D.C. 20231
www.uspto.gov

APPLICATION NUMBER	FILING/RECEIPT DATE	FIRST NAMED APPLICANT	ATTORNEY DOCKET NUMBER
11/416,234	05/03/2006	Chia-Chen Wen	BHT-3111-741

CONFIRMATION NO.
6206

BRUCE H. TROXELL
SUITE 1404
5205 LEESBURG PIKE
FALLS CHURCH VA 22041

Date Mailed: September 14, 2007

Decision Dismissing Petition under 37 CFR 1.138(c)
The declaration of express abandonment will not be recognized

This is in response to the petition under 37 CFR 1.138(c), for express abandonment to avoid publication of the above-identified application.

The petition is dismissed.

The express abandonment will **not** be recognized for the reason(s) indicated below:

1. ☑ The petition under 37 CFR 1.138(c) was not filed in sufficient time to permit the appropriate officials to recognize the abandonment and remove the application from the publication process.

2. ☐ The petition was not signed by a party authorized by 37 CFR 1.33(b)(1), (3) or (4).

3. ☐ The Application was published in compliance with 35 U.S.C. 122(b), and it is available on the USPTO web site at http://www.uspto.gov/patft/index.html.

4. ☐ Petition fee was not paid.

The application **has/will be published** as scheduled.

Telephone inquiries should be directed Office of Patent Publication, Pre-Grant Publication Division, 703-605-4283.

Barbara J. Debnam
Office of Patent Publication
Pre-Grant Publication Division

Rev. 10/01

UNITED STATES PATENT AND TRADEMARK OFFICE

Commissioner for Patents
United States Patent and Trademark Office
P.O. Box 1450
Alexandria, VA 22313-1450
www.uspto.gov

BRUCE H. TROXELL
SUITE 1404
5205 LEESBURG PIKE
FALLS CHURCH VA 22041

COPY MAILED

DEC 0 8 2008

OFFICE OF PETITIONS

In re Application of	:	
Mei-Chin Yang et al.	:	
Application No. 11/416,235	:	DECISION ON PETITION
Filed: May 3, 2006	:	
Attorney Docket No. BHT-3088-173	:	

This is a decision on the petition under the unintentional provisions of 37 CFR 1.137(b), filed November 3, 2008, to revive the above-identified application.

The petition is **GRANTED**.

This application became abandoned for failure to timely pay the issue and publication fees on or before April 24, 2008, as required by the Notice of Allowance and Fee(s) Due, mailed January 24, 2008. Accordingly, the date of abandonment of this application is April 25, 2008.

The petition satisfies the requirements of 37 CFR 1.137(b) in that petitioner has supplied (1) the reply in the form of payment of the issue fee of $1510 and the publication fee of $300, (2) the petition fee of $1620; and (3) a proper statement of unintentional delay.

In the petition, the small entity box has been checked. However, the transmittal sheet accompanying the petition clearly indicates that a large entity status is applicable. In view of this, the checking of the small entity box on the petition is being regarded as an inadvertent typographical error.

Telephone inquiries concerning this decision should be directed to JoAnne Burke at (571) 272-4584.

This application is being referred to the Office of Data Management for processing into a patent.

Ramesh Krishnamurthy

Ramesh Krishnamurthy
Petitions Examiner
Office of Petitions

UNITED STATES PATENT AND TRADEMARK OFFICE

UNITED STATES DEPARTMENT OF COMMERCE
United States Patent and Trademark Office
Address: COMMISSIONER FOR PATENTS
P.O. Box 1450
Alexandria, Virginia 22313-1450
www.uspto.gov

FROMMER LAWRENCE & HAUG
745 FIFTH AVENUE- 10TH FL.
NEW YORK, NY 10151

Mail Date: 04/21/2010

Applicant	: Yoshinari Moriya	: DECISION ON REQUEST FOR
Patent Number	: 7586547	: RECALCULATION of PATENT
Issue Date	: 09/08/2009	: TERM ADJUSTMENT IN VIEW
Appliction No	: 11/416,238	: OF WYETH
Filed	: 05/02/2006	:
		:

The Patentee's Request for Recalculation is **DISMISSED.**

This Request is deemed ineligible for consideration for one or more of the following reasons:

(A). The patent for which PTA recalculation is requested is either a design or reissue application or is a reexamination proceeding;

(B). The patent for which PTA recalculation is requested resulted from a utility or plant application filed under 35 USC 111(a) before May 29, 2000 and no CPA filed in the application on/after May 29, 2000;

(C). The patent for which PTA recalculation is requested resulted from an international application in which the international filing date was before May 29, 2000 and no CPA filed in the application on/after May 29, 2000;

(D). The patent for which PTA recalculation is requested issued on/after March 2, 2010;

(E). The Request for Recalculation was filed more than 180 days after the grant date of the patent and the request was not filed within two months of a dismissal of a request for reconsideration of the of the patent term under 37 CFR 1.705(d);

(F). The Request for Recalculation is not solely limited to USPTO pre-Wyeth interpretation of 35 U.S.C. 154(b)(2)(A);

or

(G). A civil action was filed pursuant to 35 U.S.C. 154(b)(4)(A)concerning the same patent at issue in this request.

Patentee may file a reply to this decision dismissing the Request for Recalculation. Patentee must file such reply within one month or thirty days, whichever is longer, of the mail date of the decision dismissing the Request for Recalculation. No fee is required if patentee is asserting in the reply that the dismissal for ineligibility is improper.

Patentee should use document code PET.OP if electronically filing a reply to this dismissal. If the USPTO finds that the request was improperly deemed ineligible, the USPTO will mail applicant a recalculation determination.

Patentee should be aware that in order to preserve the right to review in the United States District Court for the District of Columbia of the USPTO patent term adjustment determination, patentee must ensure that he or she also take the steps required under 35 U.S.C. 154(b)(4)(A). Nothing in the request for recalculation should be construed as providing an alternative time frame for commencing a civil action under 35 U.S.C. 154 (b)(4)(A).

Any questions concerning this decision should be directed to the Office of Patent Legal Administration at 571-272-7702.

UNITED STATES PATENT AND TRADEMARK OFFICE

UNITED STATES DEPARTMENT OF COMMERCE
United States Patent and Trademark Office
Address: COMMISSIONER FOR PATENTS
P.O. Box 1450
Alexandria, Virginia 22313-1450
www.uspto.gov

APPLICATION NO.	FILING DATE	FIRST NAMED INVENTOR	ATTORNEY DOCKET NO.	CONFIRMATION NO.
11/416,247	05/03/2006	Hae-joo Jeong	Q115948	6559

23373 7590 07/22/2010
SUGHRUE MION, PLLC
2100 PENNSYLVANIA AVENUE, N.W.
SUITE 800
WASHINGTON, DC 20037

EXAMINER
RIZK, SAMIR WADIE

ART UNIT	PAPER NUMBER
2112	

NOTIFICATION DATE	DELIVERY MODE
07/22/2010	ELECTRONIC

Please find below and/or attached an Office communication concerning this application or proceeding.

The time period for reply, if any, is set in the attached communication.

Notice of the Office communication was sent electronically on above-indicated "Notification Date" to the following e-mail address(es):

sughrue@sughrue.com
PPROCESSING@SUGHRUE.COM
USPTO@SUGHRUE.COM

UNITED STATES PATENT AND TRADEMARK OFFICE

Commissioner for Patents
United States Patent and Trademark Office
P.O. Box 1450
Alexandria, VA 22313-1450
www.uspto.gov

SUGHRUE MION, PLLC
2100 PENNSYLVANIA AVE., N.W.
SUITE 800
WASHINGTON, DC 20037

In re Application of: Jeong, et al. Appl. No.: 11/416,247 Docket No.: Q115948 Filed: May 03, 2006 For: DIGITAL BROADCASTING TRANSMISSION SYSTEM AND METHOD THEREOF	DECISION ON PETITION UNDER 37 CFR 1.59

The request for withdrawal of Information Disclosure Statement filed on September 25, 2006 (duplicate filed on June 5, 2009) is being treated as a Petition to Expunge material under 37 CFR 1.59(b).

The petition is **GRANTED**.

The instant petition requests that the Information Disclosure Document submitted on September 22, 2006 and its accompanying form PTO-1449 be expunged from the record. Petitioner states that the documents were submitted in error and were intended for a different U.S. Patent application. Authorization to charge the $200.00 petition fee set forth in 37 CFR § 1.17(g) was provided by Fadi Kiblawi on July 20, 2010 to Deposit account No. 19-4880.

The expunged document has been closed from public view and will not be returned to applicant.

It is noted that the instant application has been published on July 19, 2007. Thus, the aforementioned document submitted on September 22, 2006 has already been made available to the public and subject to copying by the public. According, the Office cannot guarantee that the document being closed as a result of this decision was not previously accessed by the public.

Applicant is required to retain the expunged information for the life of any patent, which issues on the above-identified application

Any inquiry concerning this decision should be directed to the undersigned whose telephone number is (571) 272-3595.

Brian L. Johnson, Quality Assurance Specialist
Technology Center 2100
Computer Architecture, Software and Information Security

UNITED STATES PATENT AND TRADEMARK OFFICE

UNITED STATES DEPARTMENT OF COMMERCE
United States Patent and Trademark Office
Address: COMMISSIONER FOR PATENTS
P.O. Box 1450
Alexandria, Virginia 22313-1450
www.uspto.gov

SUGHRUE MION, PLLC
2100 PENNSYLVANIA AVENUE, N.W.
SUITE 800
WASHINGTON, DC 20037

Mail Date: 04/20/2010

Applicant	: Jung-pil Yu	: DECISION ON REQUEST FOR
Patent Number	: 7639751	: RECALCULATION of PATENT
Issue Date	: 12/29/2009	: TERM ADJUSTMENT IN VIEW
Appliction No	: 11/416,254	: OF WYETH AND NOTICE OF INTENT TO
Filed	: 05/03/2006	: ISSUE CERTIFICATE OF CORRECTION
		:

The Request for Recalculation is **GRANTED** to the extent indicated.

The patent term adjustment has been determined to be **824** days. The USPTO will *sua sponte* issue a certificate of correction reflecting the amount of PTA days determined by the recalculation.

Prior to the issuance of the certificate of correction, the USPTO will afford patentee an opportunity to be heard and request reconsideration. Accordingly, patentee has **one month or thirty (30) days**, whichever is longer, to file a request for reconsideration of this patent term adjustment calculation. See 35 U.S.C. 154(b)(3)(B)(ii) and 37 CFR 1.322(a)(4). No extensions of time will be granted under 37 CFR 1.136.

Patentee should use document code PET.OP if electronically filing a request for reconsideration of this patent term adjustment calculation. The patentee must also include the information required by 37 CFR 1.705(b)(2) and the fee required by 37 CFR 1.18(e). If patentee does not file a timely request for reconsideration of this patent term adjustment calculation including the information required by 37 CFR 1.705(b)(2) and the fee required by 37 CFR 1.18(e), the USPTO will issue a certificate of correction reflecting the PTA determination noted above.

Patentee should be aware that in order to preserve the right to review in the United States District Court for the District of Columbia of the USPTO patent term adjustment determination, patentee must ensure that he or she also take the steps required under 35 U.S.C. 154(b)(4)(A) in a timely manner. Nothing in the request for recalculation should be construed as providing an alternative time frame for commencing a civil action under 35 U.S.C. 154(b)(4)(A).

Any questions concerning this decision should be directed to the Office of Patent Legal Administration at 571-272-7702.

UNITED STATES PATENT AND TRADEMARK OFFICE

UNITED STATES DEPARTMENT OF COMMERCE
United States Patent and Trademark Office
Address: COMMISSIONER FOR PATENTS
P.O. Box 1450
Alexandria, Virginia 22313-1450
www.uspto.gov

SUGHRUE MION, PLLC
2100 PENNSYLVANIA AVENUE, N.W.
SUITE 800
WASHINGTON, DC 20037

Mail Date: 04/20/2010

Applicant	: Eui-jun Park	: DECISION ON REQUEST FOR
Patent Number	: 7620102	: RECALCULATION of PATENT
Issue Date	: 11/17/2009	: TERM ADJUSTMENT IN VIEW
Appliction No	: 11/416,256	: OF WYETH AND NOTICE OF INTENT TO
Filed	: 05/03/2006	: ISSUE CERTIFICATE OF CORRECTION
		:

The Request for Recalculation is **GRANTED** to the extent indicated.

The patent term adjustment has been determined to be **737** days. The USPTO will *sua sponte* issue a certificate of correction reflecting the amount of PTA days determined by the recalculation.

Prior to the issuance of the certificate of correction, the USPTO will afford patentee an opportunity to be heard and request reconsideration. Accordingly, patentee has **one month or thirty (30) days**, whichever is longer, to file a request for reconsideration of this patent term adjustment calculation. See 35 U.S.C. 154(b)(3)(B)(ii) and 37 CFR 1.322(a)(4). No extensions of time will be granted under 37 CFR 1.136.

Patentee should use document code PET.OP if electronically filing a request for reconsideration of this patent term adjustment calculation. The patentee must also include the information required by 37 CFR 1.705(b)(2) and the fee required by 37 CFR 1.18(e). If patentee does not file a timely request for reconsideration of this patent term adjustment calculation including the information required by 37 CFR 1.705(b)(2) and the fee required by 37 CFR 1.18(e), the USPTO will issue a certificate of correction reflecting the PTA determination noted above.

Patentee should be aware that in order to preserve the right to review in the United States District Court for the District of Columbia of the USPTO patent term adjustment determination, patentee must ensure that he or she also take the steps required under 35 U.S.C. 154(b)(4)(A) in a timely manner. Nothing in the request for recalculation should be construed as providing an alternative time frame for commencing a civil action under 35 U.S.C. 154(b)(4)(A).

Any questions concerning this decision should be directed to the Office of Patent Legal Administration at 571-272-7702.

UNITED STATES PATENT AND TRADEMARK OFFICE

UNITED STATES DEPARTMENT OF COMMERCE
United States Patent and Trademark Office
Address: COMMISSIONER FOR PATENTS
P.O. Box 1450
Alexandria, Virginia 22313-1450
www.uspto.gov

ALSTON & BIRD LLP
BANK OF AMERICA PLAZA
101 SOUTH TRYON STREET, SUITE 4000
CHARLOTTE, NC 28280-4000

Mail Date: 04/28/2010

Applicant	: Nadine Carozzi	: DECISION ON REQUEST FOR
Patent Number	: 7622572	: RECALCULATION of PATENT
Issue Date	: 11/24/2009	: TERM ADJUSTMENT IN VIEW
Application No	: 11/416,261	: OF WYETH AND NOTICE OF INTENT TO
Filed	: 05/02/2006	: ISSUE CERTIFICATE OF CORRECTION
		:

The Request for Recalculation is **GRANTED** to the extent indicated.

The patent term adjustment has been determined to be **0** days. The USPTO will *sua sponte* issue a certificate of correction reflecting the amount of PTA days determined by the recalculation.

Prior to the issuance of the certificate of correction, the USPTO will afford patentee an opportunity to be heard and request reconsideration. Accordingly, patentee has **one month or thirty (30) days**, whichever is longer, to file a request for reconsideration of this patent term adjustment calculation. See 35 U.S.C. 154(b)(3)(B)(ii) and 37 CFR 1.322(a)(4). No extensions of time will be granted under 37 CFR 1.136.

Patentee should use document code PET.OP if electronically filing a request for reconsideration of this patent term adjustment calculation. The patentee must also include the information required by 37 CFR 1.705(b)(2) and the fee required by 37 CFR 1.18(e). If patentee does not file a timely request for reconsideration of this patent term adjustment calculation including the information required by 37 CFR 1.705(b)(2) and the fee required by 37 CFR 1.18(e), the USPTO will issue a certificate of correction reflecting the PTA determination noted above.

Patentee should be aware that in order to preserve the right to review in the United States District Court for the District of Columbia of the USPTO patent term adjustment determination, patentee must ensure that he or she also take the steps required under 35 U.S.C. 154(b)(4)(A) in a timely manner. Nothing in the request for recalculation should be construed as providing an alternative time frame for commencing a civil action under 35 U.S.C. 154(b)(4)(A).

Any questions concerning this decision should be directed to the Office of Patent Legal Administration at 571-272-7702.

UNITED STATES PATENT AND TRADEMARK OFFICE

UNITED STATES DEPARTMENT OF COMMERCE
United States Patent and Trademark Office
Address: COMMISSIONER FOR PATENTS
P.O. Box 1450
Alexandria, Virginia 22313-1450
www.uspto.gov

HONEYWELL/FOGG
Patent Services
101 Columbia Road
P.O Box 2245
Morristown, NJ 07962-2245

Mail Date: 04/20/2010

Applicant	: Parsa Mirmobin	: DECISION ON REQUEST FOR
Patent Number	: 7636031	: RECALCULATION of PATENT
Issue Date	: 12/22/2009	: TERM ADJUSTMENT IN VIEW
Appliction No	: 11/416,280	: OF WYETH AND NOTICE OF INTENT TO
Filed	: 05/01/2006	: ISSUE CERTIFICATE OF CORRECTION
		:

The Request for Recalculation is **GRANTED** to the extent indicated.

The patent term adjustment has been determined to be **860** days. The USPTO will *sua sponte* issue a certificate of correction reflecting the amount of PTA days determined by the recalculation.

Prior to the issuance of the certificate of correction, the USPTO will afford patentee an opportunity to be heard and request reconsideration. Accordingly, patentee has **one month or thirty (30) days**, whichever is longer, to file a request for reconsideration of this patent term adjustment calculation. See 35 U.S.C. 154(b)(3)(B)(ii) and 37 CFR 1.322(a)(4). No extensions of time will be granted under 37 CFR 1.136.

Patentee should use document code PET.OP if electronically filing a request for reconsideration of this patent term adjustment calculation. The patentee must also include the information required by 37 CFR 1.705(b)(2) and the fee required by 37 CFR 1.18(e). If patentee does not file a timely request for reconsideration of this patent term adjustment calculation including the information required by 37 CFR 1.705(b)(2) and the fee required by 37 CFR 1.18(e), the USPTO will issue a certificate of correction reflecting the PTA determination noted above.

Patentee should be aware that in order to preserve the right to review in the United States District Court for the District of Columbia of the USPTO patent term adjustment determination, patentee must ensure that he or she also take the steps required under 35 U.S.C. 154(b)(4)(A) in a timely manner. Nothing in the request for recalculation should be construed as providing an alternative time frame for commencing a civil action under 35 U.S.C. 154(b)(4)(A).

Any questions concerning this decision should be directed to the Office of Patent Legal Administration at 571-272-7702.

UNITED STATES PATENT AND TRADEMARK OFFICE

UNITED STATES DEPARTMENT OF COMMERCE
United States Patent and Trademark Office
Address: COMMISSIONER FOR PATENTS
P.O. Box 1450
Alexandria, Virginia 22313-1450
www.uspto.gov

CALFEE, HALTER & GRISWOLD LLP
1400 KEYBANK CENTER
800 SUPERIOR AVENUE
CLEVELAND, OH 44114

Mail Date: 04/20/2010

Applicant	: Mike Brojanac	: DECISION ON REQUEST FOR
Patent Number	: 7581423	: RECALCULATION of PATENT
Issue Date	: 09/01/2009	: TERM ADJUSTMENT IN VIEW
Appliction No	: 11/416,290	: OF WYETH AND NOTICE OF INTENT TO
Filed	: 05/02/2006	: ISSUE CERTIFICATE OF CORRECTION
		:

The Request for Recalculation is **GRANTED** to the extent indicated.

The patent term adjustment has been determined to be **467** days. The USPTO will *sua sponte* issue a certificate of correction reflecting the amount of PTA days determined by the recalculation.

Prior to the issuance of the certificate of correction, the USPTO will afford patentee an opportunity to be heard and request reconsideration. Accordingly, patentee has **one month or thirty (30) days**, whichever is longer, to file a request for reconsideration of this patent term adjustment calculation. See 35 U.S.C. 154(b)(3)(B)(ii) and 37 CFR 1.322(a)(4). No extensions of time will be granted under 37 CFR 1.136.

Patentee should use document code PET.OP if electronically filing a request for reconsideration of this patent term adjustment calculation. The patentee must also include the information required by 37 CFR 1.705(b)(2) and the fee required by 37 CFR 1.18(e). If patentee does not file a timely request for reconsideration of this patent term adjustment calculation including the information required by 37 CFR 1.705(b)(2) and the fee required by 37 CFR 1.18(e), the USPTO will issue a certificate of correction reflecting the PTA determination noted above.

Patentee should be aware that in order to preserve the right to review in the United States District Court for the District of Columbia of the USPTO patent term adjustment determination, patentee must ensure that he or she also take the steps required under 35 U.S.C. 154(b)(4)(A) in a timely manner. Nothing in the request for recalculation should be construed as providing an alternative time frame for commencing a civil action under 35 U.S.C. 154(b)(4)(A).

Any questions concerning this decision should be directed to the Office of Patent Legal Administration at 571-272-7702.

UNITED STATES PATENT AND TRADEMARK OFFICE

Commissioner for Patents
United States Patent and Trademark Office
P.O. Box 1450
Alexandria, VA 22313-1450
www.uspto.gov

HUMAN GENOME SCIENCES INC.
INTELLECTUAL PROPERTY DEPT.
14200 SHADY GROVE ROAD
ROCKVILLE MD 20850

COPY MAILED

JUL 27 2009

OFFICE OF PETITIONS

In re Patent No. 7,534,428	:	
Gentz et al.	:	
Issue Date: May 19, 2009	:	DECISION ON REQUEST FOR
Application No. 11/416,310	:	RECONSIDERATION OF
Filed: May 3, 2006	:	PATENT TERM ADJUSTMENT
Attorney Docket No. PF454P2C1	:	

This is in response to the APPLICATION FOR PATENT TERM ADJUSTMENT UNDER 37 C.F.R. § 1.705(d) filed July 1, 2009. Patentees request that the determination of patent term adjustment for the above-identified patent be corrected from three hundred fifty-seven (357) days to three hundred seventy-three (373) days.

The request for reconsideration of patent term adjustment is **DISMISSED** with respect to making any change in the patent term adjustment determination under 35 U.S.C. 154(b) of 357 days.

The above-identified application was filed on May 3, 2006. On May 19, 2009, the above-identified application matured into U.S. Patent No. 7,534,428 with a revised patent term adjustment of 357 days. The Office determined that the 16 days of Office delay, pursuant to 35 U.S.C. 154(b)(1)(B)[1] and 37 CFR 1.702(b),

---

[1] Pursuant to 35 U.S.C. 154(b)(1)(B), 37 CFR 1.702(b) provides, in pertinent part, that:

Failure to issue a patent within three years of the actual filing date of the application. Subject to the provisions of 35 U.S.C. 154(b) and this subpart, the term of an original patent shall be adjusted if the issuance of the patent was delayed due to the failure of the Office to issue a patent

overlap with the 357 days of Office delay,[2] pursuant to 35 U.S.C. 154(b)(1)(A) and 37 CFR 1.702(a)(1).[3] As such, the Office allowed entry of only the period of adjustment of 357 days. No additional days of patent term adjustment were entered at issuance under the three-year pendency provision. Given the zero days of applicant delay, the patent issued with a revised patent term adjustment of 357 days.

On July 1, 2009, patentees timely submitted this request for reconsideration of patent term adjustment within two months of the issue date of the patent. See 37 CFR 1.705(d). Patentees aver that the correct number of days of patent term adjustment is 373 days under the court's interpretation of the overlap provision as set forth in Wyeth v. Dudas, 580 F. Supp. 2d 138, 88 U.S.P.Q. 2d 1538 (D.D.C. 2008). Patentees assert that the PTA calculation by the USPTO did not include the 16 days of Office delay, pursuant to 37 CFR 1.702(b), for failing to issue the patent within three years of the filing date of the application. Further, patentees contend that the 16 days of delay under 37 CFR 1.702(b) ("Three Year Delay") do not overlap with the 357 days of delay under 37 CFR 1.702(a) ("examination delay"). Thus, patentees contend that they are entitled to the periods of adjustment under both 37 CFR 1.703(a) and (b) for a total patent term adjustment of 373 (357 + 16) days.

---

within three years after the date on which the application was filed under 35 U.S.C. 111(a) or the national stage commenced under 35 U.S.C. 371(b) or (f) in an international application[.]

[2] The Office mailed a non-final Office action on June 24, 2008, 14 months and 357 days after the application was filed on May 3, 2006.

[3] 37 CFR 1.702, provides grounds for adjustment of patent term due to examination delay under the Patent Term Guarantee Act of 1999 (original applications, other than designs, filed on or after May 29, 2000).

> (a) Failure to take certain actions within specified time frames. Subject to the provisions of 35 U.S.C. 154(b) and this subpart, the term of an original patent shall be adjusted if the issuance of the patent was delayed due to the failure of the Office to:
>
> (1) Mail at least one of a notification under 35 U.S.C. 132 or a notice of allowance under 35 U.S.C. 151 not later than fourteen months after the date on which the application was filed under 35 U.S.C. 111(a) or fulfilled the requirements of 35 U.S.C. 371 in an international application[.]

The Office has considered patentees' interpretation of the period of overlap, but finds it inconsistent with the Office's interpretation of the overlap provision, 35 U.S.C. 154(b)(2)(A). 35 U.S.C. 154(b)(2)(A) limits the adjustment of patent term, as follows:

> to the extent that the periods of delay attributable to grounds specified in paragraph (1) overlap, the period of any adjustment granted under this subsection shall not exceed the actual number of days the issuance of the patent was delayed.

As explained in *Explanation of 37 CFR 1.703(f)*[4] *and of the United States Patent and Trademark Office Interpretation of 35 U.S.C. 154(b)(2)(A)*, 69 Fed. Reg. 34283 (June 21, 2004), the Office interprets 35 U.S.C. 154(b)(2)(A) as permitting either patent term adjustment under 35 U.S.C. 154(b)(1)(A)(i)-(iv), or patent term adjustment under 35 U.S.C. 154(b)(1)(B), but not as permitting patent term adjustment under both 35 U.S.C. 154(b)(1)(A)(i)-(iv) and 154(b)(1)(B). Accordingly, the Office implements the overlap provision as follows:

> If an application is entitled to an adjustment under 35 U.S.C. 154(b)(1)(B), the entire period during which the application was pending (except for periods excluded under 35 U.S.C. 154(b)(1)(B)(i)-(iii)), and not just the period beginning three years after the actual filing date of the application, is the period of delay under 35 U.S.C. 154(b)(1)(B) in determining whether periods of delay overlap under 35 U.S.C. 154(b)(2)(A). Thus, any days of delay for Office issuance of the patent more than 3 years after the filing date of the application, which overlap with the days of patent term adjustment accorded prior to the issuance of the patent will not result in any additional patent term adjustment. See 35 U.S.C. 154(b)(1)(B), 35 U.S.C. 154(b)(2)(A), and 37 CFR

---

[4] Likewise, 37 CFR 1.703(f) provides that:

> To the extent that periods of delay attributable to the grounds specified in § 1.702 overlap, the period of adjustment granted under this section shall not exceed the actual number of days the issuance of the patent was delayed.

§ 1.703(f). See *Changes to Implement Patent Term Adjustment Under Twenty Year Term; Final Rule*, 65 Fed. Reg. 54366 (Sept. 18, 2000). See also *Revision of Patent Term Extension and Patent Term Adjustment Provisions; Final Rule*, 69 Fed. Reg. 21704 (April 22, 2004), 1282 Off. Gaz. Pat. Office 100 (May 18, 2004). See also *Explanation of 37 CFR 1.703(f) and of the United States Patent and Trademark Office Interpretation of 35 U.S.C. 154(b)(2)(A)*, 69 Fed. Reg. 34283 (June 21, 2004).

Further, as stated in the *Explanation of 37 CFR 1.703(f) and of the United States Patent and Trademark Office Interpretation of 35 U.S.C. 154(b)(2)(A)*, the Office has consistently taken the position that if an application is entitled to an adjustment under the three-year pendency provision of 35 U.S.C. 154(b)(1)(B), the entire period during which the application was pending before the Office (except for periods excluded under 35 U.S.C. 154(b)(1)(B)(i)-(iii)), and not just the period beginning three years after the actual filing date of the application, is the relevant period under 35 U.S.C. 154(b)(1)(B) in determining whether periods of delay "overlap" under 35 U.S.C. 154(b)(2)(A).

This interpretation is consistent with the statute. Taken together the statute and rule provide that to the extent that periods of delay attributable to grounds specified in 35 U.S.C. 154(b)(1) and in corresponding 37 CFR 1.702 overlap, the period of adjustment granted shall not exceed the actual number of days the issuance of the patent was delayed.

In this instance, the relevant period under 35 U.S.C. 154(b)(1)(B) in determining whether periods of delay "overlap" under 35 U.S.C. 154(b)(2)(A) is the period during which the application was pending before the Office beginning on the date of filing of the application under 35 U.S.C. 111(a) on May 3, 2006, and ending on the date of the issuance of the patent on May 19, 2009 (not including any other periods excluded under 35 U.S.C. 154(b)(1)(B)(i)-(iii)).

Pursuant to 35 U.S.C. 154(b)(1)(A) and 37 CFR 1.702(a)(1), 357 days of patent term adjustment were accorded during the pendency of the application for Office delay. Pursuant to 35 U.S.C. 154(b)(1)(B) and 37 CFR 1.702(b), 16 days of patent term adjustment accrued for Office issuance of the patent more than three years after the filing date of the application.

All 16 days of patent term adjustment under 37 CFR 1.702(b) overlap with the 357 days of patent term adjustment under 37 CFR 1.702(a)(1). Entry of both the 16 days and the 357 days is neither permitted nor warranted. 357 days is the actual number of days issuance of the patent was delayed.

Accordingly, at issuance, the Office properly entered no additional days of patent term adjustment, having considered the 16 days of Office delay under the three-year pendency provision.

In view thereof, the Office affirms that the revised determination of patent term adjustment at the time of the issuance of the patent is 357 days.

The Office acknowledges the submission of the $200.00 fee set forth in 37 CFR 1.18(e). No additional fees are required.

Telephone inquiries specific to this matter should be directed to the undersigned at (571) 272-3211.

Christina Tartera Donnell

Christina Tartera Donnell
Senior Petitions Attorney
Office of Petitions

UNITED STATES PATENT AND TRADEMARK OFFICE

COMMISSIONER FOR PATENTS
UNITED STATES PATENT AND TRADEMARK OFFICE
P.O. BOX 1450
ALEXANDRIA, VA 22313-1450
www.uspto.gov

HUMAN GENOME SCIENCES INC.
INTELLECTUAL PROPERTY DEPT.
14200 SHADY GROVE ROAD
ROCKVILLE MD 20850

MAILED

MAR 3 1 2010

OFFICE OF PETITIONS

In re Patent No. 7,534,428	: DECISION ON REQUEST FOR
Gentz et al.	: RECONSIDERATION OF
Issue Date: May 19, 2009	: PATENT TERM ADJUSTMENT
Application No. 11/416,310	: AND
Filed: May 3, 2006	: NOTICE OF INTENT TO ISSUE
Attorney Docket No. PF454P2C1	: CERTIFICATE OF CORRECTION

This is a decision on the petition filed on September 25, 2009,[1] which is being treated as a petition under 37 CFR 1.705(d) requesting that the patent term adjustment indicated on the above-identified patent be corrected to indicate that the term of the above-identified patent is extended or adjusted by three hundred seventy-three (373) days.

The petition to correct the patent term adjustment indicated on the above-identified patent to indicate that the term of the above-identified patent is extended or adjusted by three hundred seventy-three (373) days is **GRANTED**.

The Office acknowledges the previous submission of the $200.00 fee set forth in 37 CFR 1.18(e). No additional fees are required.

The application is being forwarded to the Certificates of Correction Branch for issuance of a certificate of correction. The Office will issue a certificate of correction indicating that the term of the above-identified patent is extended or adjusted by three hundred seventy-three (373) days.

Telephone inquiries specific to this matter should be directed to the undersigned at (571) 272-3211.

Christina Tartera Donnell

Christina Tartera Donnell
Senior Petitions Attorney
Office of Petitions

Enclosure: Copy of DRAFT Certificate of Correction

[1] This petition was timely filed within two months of the decision on the request for reconsideration of patent term adjustment mailed July 27, 2009.

UNITED STATES PATENT AND TRADEMARK OFFICE

CERTIFICATE OF CORRECTION

PATENT : 7,534,428 B2

DATED : May 19, 2009 **DRAFT**

INVENTOR(S) : Gentz et al.

It is certified that error appears in the above-identified patent and that said Letters Patent is hereby corrected as shown below:

On the cover page,

[*] Notice: Subject to any disclaimer, the term of this patent is extended or adjusted under 35 USC 154(b) by 357 days

Delete the phrase "by 357 days" and insert – by 373 days--

UNITED STATES PATENT AND TRADEMARK OFFICE

Commissioner for Patents
United States Patent and Trademark Office
P.O. Box 1450
Alexandria, VA 22313-1450
www.uspto.gov

MAILED

NOV 18 2009

OFFICE OF PETITIONS

FOLEY AND LARDNER LLP
SUITE 500
3000 K STREET NW
WASHINGTON DC 20007

In re Patent No. PP20232	:	
William J. Colfer	:	DECISION DISMISSING
Application No. 11/416,318	:	REQUEST FOR
Issue Date: August 25, 2009	:	RECONSIDERATION OF
Filed: May 3, 2006	:	PATENT TERM ADJUSTMENT
Attorney Docket No.018767-0275	:	

This is in response to the REQUEST FOR RECONSIDERATION OF PATENT TERM ADJUSTMENT UNDER 37 C.F.R. § 1.705, filed September 9, 2009, which is properly treated pursuant to 37 CFR 1.705(d). Patentee requests that the determination of patent term adjustment be corrected from four hundred twenty (420) days to five hundred thirty-four (534) days.

Preliminarily, patentee requests that the Office defer or delay a decision on this request for reconsideration until a final decision has been rendered in Wyeth v. Dudas, 580 F.Supp.2d 138, 88 U.S.P.Q.2d 1538 (D.D.C. 2008), which is now on appeal at the U.S. Court of Appeals for the Federal Circuit, under Federal Circuit Docket No. 2009-1120. However, the Office notes that there is no specific regulatory provision for requesting that a petition under 37 CFR 1.705(d) be held in abeyance.

The request for reconsideration of patent term adjustment is **DISMISSED** with respect to making any change in the patent term adjustment determination under 35 U.S.C. § 154(b) of 420 days.

BACKGROUND

This application was filed on May 3, 2006. On August 25, 2009, the application matured into U.S. Patent No. PP20232, with a revised patent term adjustment of 420 days. The Office determined that the 114 days of Office delay, pursuant to 35 U.S.C. 154(b)(1)(B) and 37 CFR 1.702(b),[1] overlaps with the 451

[1] Pursuant to 35 U.S.C. 154(b)(1)(B), 37 CFR 1.702(b) provides:

days of Office delay,[2] pursuant to 35 U.S.C. 154(b)(1)(A) and 37 CFR 1.702(a)(1),[3] accorded during the pendency of the application. As such, the Office allowed entry of only the period of adjustment of 451 days. No additional days of patent term adjustment were entered at issuance under the three-year pendency provision. The patent issued with a revised patent term adjustment of 420 days (451 days of Office delay - 31 days of applicant delay.)

On September 9, 2009, patentee timely submitted this request for reconsideration of patent term adjustment (with required fee),

---

Failure to issue a patent within three years of the actual filing date of the application. Subject to the provisions of 35 U.S.C. 154(b) and this subpart, the term of an original patent shall be adjusted if the issuance of the patent was delayed due to the failure of the Office to issue a patent within three years after the date on which the application was filed under 35 U.S.C. 111(a) or the national stage commenced under 35 U.S.C. 371(b) or (f) in an international application, but not including:

(1) Any time consumed by continued examination of the application under 35 U.S.C. 132(b);
(2) Any time consumed by an interference proceeding under 35 U.S.C. 135(a);
(3) Any time consumed by the imposition of a secrecy order under 35 U.S.C. 181;
(4) Any time consumed by review by the Board of Patent Appeals and Interferences or a Federal court; or
(5) Any delay in the processing of the application by the Office that was requested by the applicant.

[2] A non-final Office action was mailed on September 26, 2008, 14 months and 451 days after the application was filed on May 3, 2006.

[3] 37 CFR 1.702, provides grounds for adjustment of patent term due to examination delay under the Patent Term Guarantee Act of 1999 (original applications, other than designs, filed on or after May 29, 2000).

(a) Failure to take certain actions within specified time frames. Subject to the provisions of 35 U.S.C. 154(b) and this subpart, the term of an original patent shall be adjusted if the issuance of the patent was delayed due to the failure of the Office to:
(1) Mail at least one of a notification under 35 U.S.C. 132 or a notice of allowance under 35 U.S.C. 151 not later than fourteen months after the date on which the application was filed under 35 U.S.C. 111(a) or fulfilled the requirements of 35 U.S.C. 371 in an international application;

asserting that the correct number of days of Patent Term Adjustment is 534 days under the court's interpretation of the overlap provision as set forth in Wyeth v. Dudas, 580 F. Supp. 2d 138, 88 U.S.P.Q. 2d 1538 (D.D.C. 2008). Patentee asserts that pursuant to Wyeth, a PTO delay under §154(b)(1)(A) overlaps with a delay under §154(b)(1)(B) only if the delays "occur on the same day." Patentee maintains that the total non-overlapping PTO delay under §154(b)(1)(A) & (B) is 565 (451 + 114) days as these periods do not occur on the same day. Patentee asserts entitlement to 534 (Office delay of 451 + 114 days - applicant delay of 31 days) days of patent term adjustment.

OPINION

Patentee's interpretation of the period of overlap has been considered, but found inconsistent with the Office's interpretation of the overlap provision, 35 U.S.C. 154(b)(2)(A). 35 U.S.C. 154(b)(2)(A) limits the adjustment of patent term, as follows:

> to the extent that the periods of delay attributable to grounds specified in paragraph (1) overlap, the period of any adjustment granted under this subsection shall not exceed the actual number of days the issuance of the patent was delayed.

As explained in *Explanation of 37 CFR 1.703(f)*[4] *and of the United States Patent and Trademark Office Interpretation of 35 U.S.C. 154(b)(2)(A)*, 69 Fed. Reg. 34283 (June 21, 2004), the Office interprets 35 U.S.C. 154(b)(2)(A) as permitting either patent term adjustment under 35 U.S.C. 154(b)(1)(A)(i)-(iv), or patent term adjustment under 35 U.S.C. 154(b)(1)(B), but not as permitting patent term adjustment under both 35 U.S.C. 154(b)(1)(A)(i)-(iv) and 154(b)(1)(B). Accordingly, the Office implements the overlap provision as follows:

---

[4] Likewise, 37 CFR 1.703(f) provides that:

> To the extent that periods of delay attributable to the grounds specified in §1.702 overlap, the period of adjustment granted under this section shall not exceed the actual number of days the issuance of the patent was delayed.

> If an application is entitled to an adjustment under 35 U.S.C. 154(b)(1)(B), the entire period during which the application was pending (except for periods excluded under 35 U.S.C. 154(b)(1)(B)(i)-(iii)), and not just the period beginning three years after the actual filing date of the application, is the period of delay under 35 U.S.C. 154(b)(1)(B) in determining whether periods of delay overlap under 35 U.S.C. 154(b)(2)(A). Thus, any days of delay for Office issuance of the patent more than 3 years after the filing date of the application, which overlap with the days of patent term adjustment accorded prior to the issuance of the patent will not result in any additional patent term adjustment. See 35 U.S.C. 154(b)(1)(B), 35 U.S.C. 154(b)(2)(A), and 37 CFR § 1.703(f). See *Changes to Implement Patent Term Adjustment Under Twenty Year Term; Final Rule*, 65 Fed. Reg. 56366 (Sept. 18, 2000). See also *Revision of Patent Term Extension and Patent Term Adjustment Provisions; Final Rule*, 69 Fed. Reg. 21704 (April 22, 2004), 1282 Off. Gaz. Pat. Office 100 (May 18, 2004). See also *Explanation of 37 CFR 1.703(f) and of the United States Patent and Trademark Office Interpretation of 35 U.S.C. 154(b)(2)(A)*, 69 Fed. Reg. 34283 (June 21, 2004).

Further, as stated in the *Explanation of 37 CFR 1.703(f) and of the United States Patent and Trademark Office Interpretation of 35 U.S.C. 154(b)(2)(A)*, the Office has consistently taken the position that if an application is entitled to an adjustment under the three-year pendency provision of 35 U.S.C. 154(b)(1)(B), the entire period during which the application was pending before the Office (except for periods excluded under 35 U.S.C. 154(b)(1)(B)(i)-(iii)), and not just the period beginning three years after the actual filing date of the application, is the relevant period under 35 U.S.C. 154(b)(1)(B) in determining whether periods of delay "overlap" under 35 U.S.C. 154(b)(2)(A).

This interpretation is consistent with the statute. Taken together the statute and rule provide that to the extent that periods of delay attributable to grounds specified in 35 U.S.C. 154(b)(1) and in corresponding §1.702 overlap, the period of adjustment granted shall not exceed the actual number of days the issuance of the patent was delayed.

In this instance, the relevant period under 35 U.S.C. 154(b)(1)(B) in determining whether periods of delay "overlap"

under 35 U.S.C. 154(b)(2)(A) is the period during which the application was pending before the Office beginning on the application filing date under 35 U.S.C. 111(a), May 3, 2006, and ending on the date the patent issued, August 25, 2009,(not including any other periods excluded under 35 U.S.C. 154(b)(1)(B)(i)-(iii)).

Pursuant to 35 U.S.C. 154(b)(1)(A) and 37 CFR 1.702(a)(1), 451 days of patent term adjustment were accorded during the pendency of the application for Office delay prior to the issuance of patent. Pursuant to 35 U.S.C. 154(b)(1)(B) and 37 CFR 1.702(b), 114 days of patent term adjustment accrued for Office issuance of the patent more than 3 years after the filing date of the application.

All of the 114 days of patent term adjustment under 37 CFR 1.702(b) overlap with the 451 days of patent term adjustment under 37 CFR 1.702(a)(1). Entry of both the 451 days and the 114 days is neither permitted nor warranted. 451 days is the actual number of days issuance of the patent was delayed.

Accordingly, at issuance, the Office properly entered 420 days of patent term adjustment (451 days of Office delay - 31 days of applicant delay).

CONCLUSION

In view thereof, the Office affirms that the revised determination of patent term adjustment at the time of the issuance of the patent is 420 days.

The Office acknowledges submission of the $200.00 fee set forth in 37 CFR 1.18(e). No additional fees are required.

Telephone inquiries specific to this matter should be directed to Kenya A. McLaughlin, Petitions Attorney, at (571) 272-3222.

Christina Tartera Donnell

Christina Tartera Donnell
Senior Petitions Attorney
Office of Petitions

UNITED STATES PATENT AND TRADEMARK OFFICE

Commissioner for Patents
United States Patent and Trademark Office
P.O. Box 1450
Alexandria, VA 22313-1450
www.uspto.gov

MAILED

APR 13 2010

OFFICE OF PETITIONS

FOLEY AND LARDNER LLP
SUITE 500
3000 K STREET NW
WASHINGTON DC 20007

In re Patent No. PP20232	: DECISION ON REQUEST
William J. Colfer	: FOR
Issue Date: August 25, 2009	: RECONSIDERATION OF
Application No. 11/416,318	: PATENT TERM ADJUSTMENT
Filed: May 3, 2006	: and
Atty Docket No.018767-0275	: NOTICE OF INTENT TO ISSUE
	: CERTIFICATE OF CORRECTION

This is a decision on the petition filed on December 10, 2009, which is being treated as a petition under 37 CFR 1.705(d) requesting that the patent term adjustment indicated on the above-identified patent be corrected to indicate that the term of the above-identified patent is extended or adjusted by five hundred and thirty-four (534) days.

The petition to correct the patent term adjustment indicated on the above-identified patent to indicate that the term of the above-identified patent is extended or adjusted by five hundred and thirty-four (534) days is **GRANTED**.

Deposit account 19-0741 will be charged $200.00 for the fee set forth in 37 CFR 1.18(e). No additional fees are required.

The application is being forwarded to the Certificates of Corrections Branch for issuance of a certificate of correction. The Office will issue a certificate of correction indicating that the term of the above-identified patent is extended or adjusted by **five hundred and thirty-four (534) days**.

Telephone inquiries specific to this matter should be directed to the undersigned, at (571) 272-3222.

Kenya A. McLaughlin
Petitions Attorney
Office of Petitions

Enclosure: Copy of DRAFT Certificate of Correction

DRAFT COPY

UNITED STATES PATENT AND TRADEMARK OFFICE

CERTIFICATE OF CORRECTION

PATENT : US PP20,232 P3

DATED : Aug. 25, 2009

INVENTOR(S) : Colfer

It is certified that error appears in the above-identified patent and that said Letters Patent is hereby corrected as shown below:

On the cover page,

[*] Notice: Subject to any disclaimer, the term of this patent is extended or adjusted under 35 USC 154(b) by (420) days

Delete the phrase "by 420 days" and insert – by 534 days--

UNITED STATES PATENT AND TRADEMARK OFFICE

Commissioner for Patents
United States Patent and Trademark Office
P.O. Box 1450
Alexandria, VA 22313-1450
www.uspto.gov

COPY MAILED

NOV 2 7 2007

OFFICE OF PETITIONS

MCDERMOTT WILL & EMERY LLP
600 13TH STREET, N.W.
WASHINGTON, DC 20005-3096

In re Application of
Rodney H. MILLER
Application No. 11/416,326
Filed: May 3, 2006
Attorney Docket No. 074741-0011

DECISION ON PETITION TO WITHDRAW FROM RECORD

This is a decision on the Request to Withdraw as attorney or agent of record under 37 C.F.R. § 1.36(b), filed August 8, 2007.

The request is **APPROVED**.

A grantable request to withdraw as attorney/agent of record must be signed by every attorney/agent seeking to withdraw or contain a clear indication that one attorney is signing on behalf of another/others. A request to withdraw will not be approved unless at least 30 (thirty) days would remain between the date of approval and the later of the expiration date of a time to file a response or the expiration date of the maximum time period which can be extended under 37 C.F.R. § 1.136(a).

The request was signed by Brian K. Seidleck on behalf of all attorneys of record who are associated with customer No. 20277.

All attorneys/agents of record associated with Customer Number 20277 have been withdrawn.

Applicant is reminded that there is no attorney of record at this time.

The request to change the correspondence of record is not acceptable as the requested correspondence address is not that of: (1) the first named signing inventor; or (2) an intervening assignee of the entire interest under 37 C.F.R 3.71. All future communications from the Office will be directed to the first named signing inventor at the first copied address below until otherwise properly notified by the applicant.

In order to request or take action in a patent matter, the assignee must establish its ownership of the patent to the satisfaction of the Director. In this regard, a Statement under 37 CFR 3.73(b) must have either: (i) documentary evidence of a chain of title from the original owner to the assignee (*e.g.*, copy of an executed assignment), and a statement affirming that the documentary evidence of the chain of title from the original owner to the assignee was or concurrently is being submitted for recordation pursuant to § 3.11; or (ii) a statement specifying where documentary evidence of a chain of title from the original owner to the assignee is recorded in the assignment records of the Office (*e.g.*, reel and frame number).

There are no outstanding Office actions pending at the present time.

Telephone inquiries concerning this decision should be directed to Diane Goodwyn at 571-272-6735.

April Wise
Petitions Examiner
Office of Petitions

cc: RODNEY H. MILLER
78 SUMMIT CRESCENT,
WESTMOUNT, QUEBEC, CANADA

cc: GUY LAVERGNE, ASSOCIATE GENERAL COUNSEL
QUANTUM LEAP RESEARCH INC.
237 HYMUS BLVD.
MONTREAL (POINTE CLAIRE)
QUEBEC, CANADA H9R 5C7

UNITED STATES PATENT AND TRADEMARK OFFICE

UNITED STATES DEPARTMENT OF COMMERCE
United States Patent and Trademark Office
Address: COMMISSIONER FOR PATENTS
P.O. Box 1450
Alexandria, Virginia 22313-1450
www.uspto.gov

APPLICATION NUMBER	FILING OR 371(C) DATE	FIRST NAMED APPLICANT	ATTY. DOCKET NO./TITLE
11/416,326	05/03/2006	Rodney H. Miller	074741-0011

CONFIRMATION NO. 6597

POWER OF ATTORNEY NOTICE

20277
MCDERMOTT WILL & EMERY LLP
600 13TH STREET, N.W.
WASHINGTON, DC 20005-3096

OC000000026662777

Date Mailed: 11/08/2007

NOTICE REGARDING CHANGE OF POWER OF ATTORNEY

This is in response to the Power of Attorney filed 08/08/2007.

- The withdrawal as attorney in this application has been accepted. Future correspondence will be mailed to the new address of record. 37 CFR 1.33.

/dcgoodwyn/

Office of Initial Patent Examination (571) 272-4000 or 1-800-PTO-9199

UNITED STATES PATENT AND TRADEMARK OFFICE

UNITED STATES DEPARTMENT OF COMMERCE
United States Patent and Trademark Office
Address: COMMISSIONER FOR PATENTS
P.O. Box 1450
Alexandria, Virginia 22313-1450
www.uspto.gov

Qisda Corporation
157 Shan-Ying Road
Gueishan
Taoyuan, 333
TAIWAN

Mail Date: 05/24/2010

Applicant	: Chi-Pao Huang	: DECISION ON REQUEST FOR
Patent Number	: 7626566	: RECALCULATION of PATENT
Issue Date	: 12/01/2009	: TERM ADJUSTMENT IN VIEW
Application No	: 11/416,329	: OF WYETH AND NOTICE OF INTENT TO
Filed	: 05/02/2006	: ISSUE CERTIFICATE OF CORRECTION
		:

The Request for Recalculation is **GRANTED** to the extent indicated.

The patent term adjustment has been determined to be **857** days. The USPTO will *sua sponte* issue a certificate of correction reflecting the amount of PTA days determined by the recalculation.

Prior to the issuance of the certificate of correction, the USPTO will afford patentee an opportunity to be heard and request reconsideration. Accordingly, patentee has **one month or thirty (30) days**, whichever is longer, to file a request for reconsideration of this patent term adjustment calculation. See 35 U.S.C. 154(b)(3)(B)(ii) and 37 CFR 1.322(a)(4). No extensions of time will be granted under 37 CFR 1.136.

Patentee should use document code PET.OP if electronically filing a request for reconsideration of this patent term adjustment calculation. The patentee must also include the information required by 37 CFR 1.705(b)(2) and the fee required by 37 CFR 1.18(e). If patentee does not file a timely request for reconsideration of this patent term adjustment calculation including the information required by 37 CFR 1.705(b)(2) and the fee required by 37 CFR 1.18(e), the USPTO will issue a certificate of correction reflecting the PTA determination noted above.

Patentee should be aware that in order to preserve the right to review in the United States District Court for the District of Columbia of the USPTO patent term adjustment determination, patentee must ensure that he or she also take the steps required under 35 U.S.C. 154(b)(4)(A) in a timely manner. Nothing in the request for recalculation should be construed as providing an alternative time frame for commencing a civil action under 35 U.S.C. 154(b)(4)(A).

Any questions concerning this decision should be directed to the Office of Patent Legal Administration at 571-272-7702.

UNITED STATES PATENT AND TRADEMARK OFFICE

Commissioner for Patents
United States Patent and Trademark Office
P.O. Box 1450
Alexandria, VA 22313-1450
www.uspto.gov

COOK ALEX LTD
SUITE 2850
200 WEST ADAMS STREET
CHICAGO IL 60606

MAILED

AUG 20 2009

OFFICE OF PETITIONS

In re Application of	:	
Satoshi Seo et al	:	
Application No. 11/416,331	:	DECISION ON PETITION
Filed: May 2, 2006	:	UNDER 37 CFR 1.313(c)
Attorney Docket No. 0553-0377.01	:	

This is a decision on the petition under 37 CFR 1.313(c), filed August 18, 2009, to withdraw the above-identified application from issue after payment of the issue fee.

The petition is **GRANTED**.

The above-identified application is withdrawn from issue for consideration of a submission under 37 CFR 1.114 (request for continued examination). *See* 37 CFR 1.313(c)(2).

Petitioner is advised that the issue fee paid on July 15, 2009, cannot be refunded. If, however, this application is again allowed, petitioner may request that it be applied towards the issue fee required by the new Notice of Allowance.[1]

Telephone inquiries should be directed to the undersigned at (571) 272-3208.

This application is being referred to Technology Center AU 2879 for processing of the request for continued examination under 37 CFR 1.114 and for consideration of the concurrently filed IDS.

/Karen Creasy/
Karen Creasy
Petitions Examiner
Office of Petitions

---

[1] *The request to apply the issue fee to the new Notice may be satisfied by completing and returning the new Part B – Fee(s) Transmittal Form (along with any balance due at the time of submission). Petitioner is advised that the Issue Fee Transmittal Form* ***must*** *be completed and timely submitted to avoid abandonment of the application.*

UNITED STATES PATENT AND TRADEMARK OFFICE

Commissioner for Patents
United States Patent and Trademark Office
P.O. Box 1450
Alexandria, VA 22313-1450
www.uspto.gov

COOK ALEX LTD
200 WEST ADAMS STREET SUITE 2850
CHICAGO, IL 60606

COPY MAILED

DEC 3 1 2009

OFFICE OF PETITIONS

In re Application of	:	
Satoshi SEO, et *al.*	:	
Application No. 11/416,331	:	DECISION GRANTING PETITION
Filed: May 2, 2006	:	UNDER 37 CFR 1.313(c)(2)
Attorney Docket No. **0553-0377.01**	:	

This is a decision on the petition under 37 CFR 1.313(c)(2), filed December 30, 2009, to withdraw the above-identified application from issue after payment of the issue fee.

The petition is **GRANTED**.

The above-identified application is withdrawn from issue for consideration of a submission under 37 CFR 1.114 (request for continued examination). *See* 37 CFR 1.313(c)(2).

Petitioner is advised that the issue fee paid on November 25, 2009 cannot be refunded. If, however, this application is again allowed, petitioner may request that it be applied towards the issue fee required by the new Notice of Allowance.[1]

Telephone inquiries should be directed to the undersigned at (571) 272-7253.

This application is being referred to Technology Center AU 2879 for processing of the request for continued examination under 37 CFR 1.114 and for consideration of the concurrently filed information disclosure statement.

/Monica A. Graves/
Petitions Examiner, Office of Petitions

---

[1] *The request to apply the issue fee to the new Notice may be satisfied by completing and returning the new Part B – Fee(s) Transmittal Form (along with any balance due at the time of submission). Petitioner is advised that the Issue Fee Transmittal Form* ***must*** *be completed and timely submitted to avoid abandonment of the application.*

UNITED STATES PATENT AND TRADEMARK OFFICE

UNITED STATES DEPARTMENT OF COMMERCE
United States Patent and Trademark Office
Address: COMMISSIONER FOR PATENTS
P.O. Box 1450
Alexandria, Virginia 22313-1450
www.uspto.gov

APPLICATION NO.	FILING DATE	FIRST NAMED INVENTOR	ATTORNEY DOCKET NO.	CONFIRMATION NO.
11/416,375	05/02/2006	Mark Brister	DEXCOM.051C2	6622

EXAMINER

7590 11/01/2007
KNOBBE MARTENS OLSON & BEAR LLP
2040 MAIN STREET
FOURTEENTH FLOOR
IRVINE, CA 92614

ART UNIT	PAPER NUMBER
3736	

NOTIFICATION DATE	DELIVERY MODE
11/01/2007	ELECTRONIC

DECISION GRANTING PETITION UNDER 37 CFR 1.138(d)

The declaration of express abandonment is recognized

This is in response to the petition under 37 CFR 1.138(d), requesting for a refund of any previously paid search fee and excess claims fee in the above-identified application.

The petition is granted.

The express abandonment is recognized. Any previously paid search fee and excess claims fee are hereby refunded.

Telephone inquiries should be directed to the Office of Data Management at (571) 272-4200.

Kalethia King
Patent Publication Branch
Office of Data Management

FORM PET651G (Rev. 08/07)

UNITED STATES PATENT AND TRADEMARK OFFICE

UNITED STATES DEPARTMENT OF COMMERCE
United States Patent and Trademark Office
Address: COMMISSIONER FOR PATENTS
P.O. Box 1450
Alexandria, Virginia 22313-1450
www.uspto.gov

MBHB/TRADING TECHNOLOGIES
300 SOUTH WACKER DRIVE
SUITE 3200
CHICAGO, IL 60606

Mail Date: 04/20/2010

Applicant	: Sagy Mintz	: DECISION ON REQUEST FOR
Patent Number	: 7610240	: RECALCULATION of PATENT
Issue Date	: 10/27/2009	: TERM ADJUSTMENT IN VIEW
Appliction No	: 11/416,376	: OF WYETH AND NOTICE OF INTENT TO
Filed	: 05/02/2006	: ISSUE CERTIFICATE OF CORRECTION
		:

The Request for Recalculation is **GRANTED** to the extent indicated.

The patent term adjustment has been determined to be **0** days. The USPTO will *sua sponte* issue a certificate of correction reflecting the amount of PTA days determined by the recalculation.

Prior to the issuance of the certificate of correction, the USPTO will afford patentee an opportunity to be heard and request reconsideration. Accordingly, patentee has **one month or thirty (30) days**, whichever is longer, to file a request for reconsideration of this patent term adjustment calculation. See 35 U.S.C. 154(b)(3)(B)(ii) and 37 CFR 1.322(a)(4). No extensions of time will be granted under 37 CFR 1.136.

Patentee should use document code PET.OP if electronically filing a request for reconsideration of this patent term adjustment calculation. The patentee must also include the information required by 37 CFR 1.705(b)(2) and the fee required by 37 CFR 1.18(e). If patentee does not file a timely request for reconsideration of this patent term adjustment calculation including the information required by 37 CFR 1.705(b)(2) and the fee required by 37 CFR 1.18(e), the USPTO will issue a certificate of correction reflecting the PTA determination noted above.

Patentee should be aware that in order to preserve the right to review in the United States District Court for the District of Columbia of the USPTO patent term adjustment determination, patentee must ensure that he or she also take the steps required under 35 U.S.C. 154(b)(4)(A) in a timely manner. Nothing in the request for recalculation should be construed as providing an alternative time frame for commencing a civil action under 35 U.S.C. 154(b)(4)(A).

Any questions concerning this decision should be directed to the Office of Patent Legal Administration at 571-272-7702.

UNITED STATES PATENT AND TRADEMARK OFFICE

COMMISSIONER FOR PATENTS
UNITED STATES PATENT AND TRADEMARK OFFICE
P.O. BOX 1450
ALEXANDRIA, VA 22313-1450
www.uspto.gov

VENABLE LLP
P.O. BOX 34385
WASHINGTON DC 20043-9998

COPY MAILED
DEC 17 2008

In re Application of :
Aulanko, et al. : LETTER REGARDING PTA
Application No. 11/416,384 :
Filed: May 3, 2006 :
Atty. Dkt. No.: 31794-229566 :

This letter is in response to the "Request for Recalculation of Patent Term Adjustment," filed August 20, 2008. The Office thanks applicants for their good faith and candor in bringing this to our attention.

The Determination of Patent Term Adjustment mailed May 21, 2008 indicated that the above-identified application was entitled to a patent term adjustment ("PTA") of 125 days. Applicants suggest that the correction adjustment is 94 days and request verification of the calculation of adjustment.

The correct Patent Term Adjustment ("PTA") at the time of the allowance is 125 days as indicated in the Determination of Patent Term Adjustment.

As reflected in the Determination of Patent Term Adjustment, an adjustment of 156 days in accordance with 37 CFR 1.702(a)(1) and 1.703(a)(1) can be attributed to the Office connection with the non-final Office action mailed December 6, 2007. The adjustment commenced July 4, 2007 and ended December 6, 2007.

As further reflected in the Determination of Patent Term Adjustment, the adjustment is properly reduced 31 days in accordance with 37 CFR 1.704(b) in connection with the reply filed October 2, 2006 in response to the Notice to File Missing Parts mailed June 1, 2006. The reduction commenced September 2, 2006 and ended October 2, 2006.

Accordingly, at the time of allowance, the application is entitled to an adjustment 125 days (adjustment for Office delays totalling 156 days and reductions for applicants' delays totalling 31 days).

If applicants remain of the belief that an error remains in the calculation of adjustment, applicants should notify the Office specifying the exact nature of the error.

As applicants are advising us of a potential error in providing too much patent term adjustment in this application, no fee is due in connection with this matter.

The patent term adjustment indicated in the patent will include any additional patent term accrued pursuant to §§ 1.702(a)(4) and 1.702(b).

This application is being forward to the Office of Patent Publication for issuance of the patent.

Telephone inquiries specific to this matter should be directed to Petitions Attorney Alesia M. Brown at (571) 272-3205.

Kery Fries
Senior Patent Attorney
Office of Patent Legal Administration
Office of Deputy Commissioner
for Patent Examination Policy

Enclosure: Copy of Adjustment PAIR Calculation

Day : Thursday
Date: 12/18/2008

PALM INTRANET

Time: 17:38:06

PTA Calculations for Application: 11/416384			
Application Filing Date:	05/03/2006	PTO Delay (PTO):	156
Issue Date of Patent:		Three Years:	0
Pre-Issue Petitions:	0	Applicant Delay (APPL):	31
Post-Issue Petitions:	0	Total PTA (days):	125
PTO Delay Adjustment:	0		

File Contents History

Number	Date	Contents Description	PTO	APPL	START
31	05/21/2008	MAIL NOTICE OF ALLOWANCE			
30	05/20/2008	ISSUE REVISION COMPLETED			
29	05/20/2008	DOCUMENT VERIFICATION			
28	05/20/2008	NOTICE OF ALLOWANCE DATA VERIFICATION COMPLETED			
27	05/19/2008	NOTICE OF ALLOWABILITY			
26	04/07/2008	DATE FORWARDED TO EXAMINER			
25	02/27/2008	RESPONSE AFTER NON-FINAL ACTION			
24	02/27/2008	NEW OR ADDITIONAL DRAWING FILED			
23	12/06/2007	MAIL NON-FINAL REJECTION	156		-1
22	12/05/2007	NON-FINAL REJECTION			
19	05/03/2006	INFORMATION DISCLOSURE STATEMENT CONSIDERED			
17	07/31/2007	CASE DOCKETED TO EXAMINER IN GAU			
16	05/17/2007	CASE DOCKETED TO EXAMINER IN GAU			
15	01/18/2007	PG-PUB ISSUE NOTIFICATION			
14	10/12/2006	IFW TSS PROCESSING BY TECH CENTER COMPLETE			
13	05/03/2006	REFERENCE CAPTURE ON IDS			
12.7	05/03/2006	INFORMATION DISCLOSURE STATEMENT (IDS) FILED			
12	05/03/2006	INFORMATION DISCLOSURE STATEMENT (IDS) FILED			
11	10/10/2006	APPLICATION RETURN FROM OIPE			
10	10/10/2006	APPLICATION RETURN TO OIPE			
9	10/10/2006	APPLICATION DISPATCHED FROM OIPE			
8	10/10/2006	APPLICATION IS NOW COMPLETE			

7	10/02/2006	PAYMENT OF ADDITIONAL FILING FEE/PREEXAM		31	5
6	10/02/2006	A STATEMENT BY ONE OR MORE INVENTORS SATISFYING THE REQUIREMENT UNDER 35 USC 115, OATH OF THE APPLIC			
5	06/01/2006	NOTICE MAILED--APPLICATION INCOMPLETE--FILING DATE ASSIGNED			
3	05/22/2006	CLEARED BY OIPE CSR			
2	05/13/2006	IFW SCAN & PACR AUTO SECURITY REVIEW			
1	05/03/2006	INITIAL EXAM TEAM NN			

Search Another: Application# Search

EXPLANATION OF PTA CALCULATION

EXPLANATION OF PTE CALCULATION

To go back, right click here and select Back. To go forward, right click here and select Forward. To refresh, right click here and select Refresh.

Back to OASIS | Home page

UNITED STATES PATENT AND TRADEMARK OFFICE

Commissioner for Patents
United States Patent and Trademark Office
P.O. Box 1450
Alexandria, VA 22313-1450
www.uspto.gov

Paper No.

COPY MAILED

JUL 21 2008

OFFICE OF PETITIONS

WOODCOCK WASHBURN LLP
CIRA CENTRE, 12TH FLOOR
2929 ARCH STREET
PHILADELPHIA PA 19104-2891

In re Application of Richard C. Fuisz et al. Application No. 11/416,410 Filed: May 2, 2006 Attorney Docket Number: BB-0006 Title: METHOD AND APPARATUS FOR TRANSLATING WEB ADDRESSES AND USING NUMERICALLY ENTERED WEB ADDRESSES	DECISION ON PETITION PURSUANT TO 37 C.F.R. § 1.137(B)

This is a decision on the petition filed March 7, 2008, pursuant to 37 C.F.R. § 1.137(b), to revive the above-identified application.

The petition under 37 C.F.R. § 1.137(b) is **GRANTED**.

The above-identified application became abandoned for failure to reply in a timely manner to the Notice of Missing Parts (notice), mailed May 26, 2006, which set a shortened statutory period for reply of two months. No response was received, and no extensions of time under the provisions of 37 C.F.R. § 1.136(a) were requested. Accordingly, the above-identified application became abandoned on July 27, 2006. A notice of abandonment was mailed on February 7, 2007.

A grantable petition pursuant to 37 C.F.R. § 1.137(b) must be accompanied by:

(1) The reply required to the outstanding Office action or notice, unless previously filed;
(2) The petition fee as set forth in 37 C.F.R. § 1.17(m);
(3) A statement that the entire delay in filing the required reply from the due date for the reply until the filing of a grantable petition pursuant to this paragraph was unintentional. The Commissioner may require additional information where there is a question whether the delay was unintentional, and;
(4) Any terminal disclaimer (and fee as set forth in 37 C.F.R. § 1.20(d)) required pursuant to paragraph (d) of this section.

With this petition, Petitioner has submitted the petition fee, the proper statement of unintentional delay, replacement drawings, the filing fee along with the fee that is associated with the late submission of the same, the search and examination fees, and the fee that is associated with the filing of excess claims.

Consequently, the first three requirements of Rule 1.137(b) have been met. The fourth requirement is not applicable, as a terminal disclaimer is not required.

The Office of Patent Application Processing (OPAP) will be notified of this decision so that the application may receive further processing.

Petitioner may find it beneficial to view Private PAIR within a fortnight of the present decision to ensure that the revival has been acknowledged by OPAP in response to this decision. It is noted that all inquiries with regard to any failure of that change in status should be directed to OPAP where that change of status must be effected - **the Office of Petitions cannot effectuate a change of status.**

Telephone inquiries regarding *this decision* should be directed to the undersigned at (571) 272-3225[1]. All other inquiries

1 Petitioner will note that all practice before the Office should be in writing, and the action of the Office will be based exclusively on the written record in the Office. See 37 C.F.R. § 1.2. As such, Petitioner is reminded

concerning the status of the application should be directed to the Office of Patent Publication at 571-272-4200.

/Paul Shanoski/
Paul Shanoski
Senior Attorney
Office of Petitions

---

that no telephone discussion may be controlling or considered authority for any further action(s) of Petitioner.

UNITED STATES PATENT AND TRADEMARK OFFICE

Commissioner for Patents
United States Patent and Trademark Office
P.O. Box 1450
Alexandria, VA 22313-1450
www.uspto.gov

ARENT FOX LLP
1050 CONNECTICUT AVENUE, N.W.
SUITE 400
WASHINGTON, DC 20036

COPY MAILED

DEC 18 2009

OFFICE OF PETITIONS

In re Application of	:	
Auricchio et al.	:	
Application No. 11/416,453	:	DECISION ON PETITION
Filed: May 3, 2006	:	
Attorney Docket No. 100506-00026	:	

This is a decision on the petition, filed October 22, 2009, which is being treated as a petition under 37 CFR 1.181 (no fee) requesting withdrawal of the holding of abandonment in the above-identified application.

The petition is **GRANTED**.

This application was held abandoned for failure to file a proper reply to the Office action mailed January 2, 2009. A Notice of Abandonment was mailed on September 29, 2009. In response on October 22, 2009, the present petition was filed.

Petitioner requests, that the abandonment be withdrawn since a response was timely filed. The petitioner asserts that a timely reply was submitted to the Office action mailed January 2, 2009. In support, petitioner has submitted a copy of the response, the Electronic Acknowledgement Receipt and a two (2) month extension of time filed June 2, 2009.

In view of the above, the holding of abandonment is hereby withdrawn and the application is restored to pending status.

This application is being referred to Technology Center 1633 for further examination on the merits.

Chris Bottorff
Petitions Examiner
Office of Petitions

UNITED STATES PATENT AND TRADEMARK OFFICE

UNITED STATES DEPARTMENT OF COMMERCE
United States Patent and Trademark Office
Address: COMMISSIONER FOR PATENTS
P.O. Box 1450
Alexandria, Virginia 22313-1450
www.uspto.gov

JACOBSON HOLMAN PLLC
400 SEVENTH STREET N.W.
SUITE 600
WASHINGTON, DC 20004

Mail Date: 04/21/2010

Applicant	: Ralf Wolleschensky	: DECISION ON REQUEST FOR
Patent Number	: 7605976	: RECALCULATION of PATENT
Issue Date	: 10/20/2009	: TERM ADJUSTMENT IN VIEW
Appliction No	: 11/416,455	: OF WYETH AND NOTICE OF INTENT TO
Filed	: 05/03/2006	: ISSUE CERTIFICATE OF CORRECTION
		:

The Request for Recalculation is **GRANTED** to the extent indicated.

The patent term adjustment has been determined to be **443** days. The USPTO will *sua sponte* issue a certificate of correction reflecting the amount of PTA days determined by the recalculation.

Prior to the issuance of the certificate of correction, the USPTO will afford patentee an opportunity to be heard and request reconsideration. Accordingly, patentee has **one month or thirty (30) days**, whichever is longer, to file a request for reconsideration of this patent term adjustment calculation. See 35 U.S.C. 154(b)(3)(B)(ii) and 37 CFR 1.322(a)(4). No extensions of time will be granted under 37 CFR 1.136.

Patentee should use document code PET.OP if electronically filing a request for reconsideration of this patent term adjustment calculation. The patentee must also include the information required by 37 CFR 1.705(b)(2) and the fee required by 37 CFR 1.18(e). If patentee does not file a timely request for reconsideration of this patent term adjustment calculation including the information required by 37 CFR 1.705(b)(2) and the fee required by 37 CFR 1.18(e), the USPTO will issue a certificate of correction reflecting the PTA determination noted above.

Patentee should be aware that in order to preserve the right to review in the United States District Court for the District of Columbia of the USPTO patent term adjustment determination, patentee must ensure that he or she also take the steps required under 35 U.S.C. 154(b)(4)(A) in a timely manner. Nothing in the request for recalculation should be construed as providing an alternative time frame for commencing a civil action under 35 U.S.C. 154(b)(4)(A).

Any questions concerning this decision should be directed to the Office of Patent Legal Administration at 571-272-7702.

UNITED STATES PATENT AND TRADEMARK OFFICE

Commissioner for Patents
United States Patent and Trademark Office
P.O. Box 1450
Alexandria, VA 22313-1450
www.uspto.gov

HENRICKS SLAVIN AND HOLMES LLP
SUITE 200
840 APOLLO STREET
EL SEGUNDO CA 90245

10/2/07

In re Application of:
HOWARD, DAVID R.
Serial No.: 11/416,463
Filed: May 1, 2006
Docket: 020100-024B

Title: HEIGHT MECHANISM FOR EQUIPMENT, INCLUDING CONCRETE SAWS

DECISION ON PETITION

This is a decision on the petition received on Nov. 29, 2006, seeking to suspend action on the above-identified application for a period of six months. This petition is being considered pursuant to 37 CFR § 1.103(a). The petitioner has authorized a charge of the requisite $200.00 petition fee to the Account No. 50-0655.

The petition is dismissed as moot.

The record shows that:

1) On Nov. 29, 2006, the petitioner filed the instant petition requesting a six-month suspension of examination pending the final decision on the appeal relating to an Appeal Brief in the related parent application, SN 10/357,309.
2) In the petition, petitioner also states that the claims to be pursued in the present application may depend on the outcome of presently pending petitions and the Request for Reconsideration in the parent application, SN 10/357,309.
3) After six months from the date of the petition, no Office action was issued. The application will remain in the examiner's docket for examination in accordance with M.P.E.P. § 708.

In light of the fact that more than eight months have passed from the date of the filing the petition and no action was taken on this application, which is more than the time period what the petitioner had requested, this petition has been rendered moot. Any inquiry regarding this decision should be directed to Henry Yuen, Special Programs Examiner at (571)-272-4856.

PETITION DISMISSED AS MOOT

Karen M. Young

Karen M. Young, Director
Technology Center 3700

UNITED STATES PATENT AND TRADEMARK OFFICE

UNITED STATES DEPARTMENT OF COMMERCE
United States Patent and Trademark Office
Address: COMMISSIONER FOR PATENTS
P.O. Box 1450
Alexandria, Virginia 22313-1450
www.uspto.gov

MBHB/TRADING TECHNOLOGIES
300 SOUTH WACKER DRIVE
SUITE 3200
CHICAGO, IL 60606

Mail Date: 04/20/2010

Applicant	: Robert A. West	: DECISION ON REQUEST FOR
Patent Number	: 7580882	: RECALCULATION of PATENT
Issue Date	: 08/25/2009	: TERM ADJUSTMENT IN VIEW
Appliction No	: 11/416,464	: OF WYETH AND NOTICE OF INTENT TO
Filed	: 05/02/2006	: ISSUE CERTIFICATE OF CORRECTION
		:

The Request for Recalculation is **GRANTED** to the extent indicated.

The patent term adjustment has been determined to be **207** days. The USPTO will *sua sponte* issue a certificate of correction reflecting the amount of PTA days determined by the recalculation.

Prior to the issuance of the certificate of correction, the USPTO will afford patentee an opportunity to be heard and request reconsideration. Accordingly, patentee has **one month or thirty (30) days**, whichever is longer, to file a request for reconsideration of this patent term adjustment calculation. See 35 U.S.C. 154(b)(3)(B)(ii) and 37 CFR 1.322(a)(4). No extensions of time will be granted under 37 CFR 1.136.

Patentee should use document code PET.OP if electronically filing a request for reconsideration of this patent term adjustment calculation. The patentee must also include the information required by 37 CFR 1.705(b)(2) and the fee required by 37 CFR 1.18(e). If patentee does not file a timely request for reconsideration of this patent term adjustment calculation including the information required by 37 CFR 1.705(b)(2) and the fee required by 37 CFR 1.18(e), the USPTO will issue a certificate of correction reflecting the PTA determination noted above.

Patentee should be aware that in order to preserve the right to review in the United States District Court for the District of Columbia of the USPTO patent term adjustment determination, patentee must ensure that he or she also take the steps required under 35 U.S.C. 154(b)(4)(A) in a timely manner. Nothing in the request for recalculation should be construed as providing an alternative time frame for commencing a civil action under 35 U.S.C. 154(b)(4)(A).

Any questions concerning this decision should be directed to the Office of Patent Legal Administration at 571-272-7702.

UNITED STATES PATENT AND TRADEMARK OFFICE

UNITED STATES DEPARTMENT OF COMMERCE
United States Patent and Trademark Office
Address: COMMISSIONER FOR PATENTS
P.O. Box 1450
Alexandria, Virginia 22313-1450
www.uspto.gov

MBHB/TRADING TECHNOLOGIES
300 SOUTH WACKER DRIVE
SUITE 3200
CHICAGO, IL 60606

Mail Date: 04/20/2010

Applicant	: Michael J. Burns	: DECISION ON REQUEST FOR
Patent Number	: 7644030	: RECALCULATION of PATENT
Issue Date	: 01/05/2010	: TERM ADJUSTMENT IN VIEW
Appliction No	: 11/416,471	: OF WYETH AND NOTICE OF INTENT TO
Filed	: 05/02/2006	: ISSUE CERTIFICATE OF CORRECTION
		:

The Request for Recalculation is **GRANTED** to the extent indicated.

The patent term adjustment has been determined to be **192** days. The USPTO will *sua sponte* issue a certificate of correction reflecting the amount of PTA days determined by the recalculation.

Prior to the issuance of the certificate of correction, the USPTO will afford patentee an opportunity to be heard and request reconsideration. Accordingly, patentee has **one month or thirty (30) days**, whichever is longer, to file a request for reconsideration of this patent term adjustment calculation. See 35 U.S.C. 154(b)(3)(B)(ii) and 37 CFR 1.322(a)(4). No extensions of time will be granted under 37 CFR 1.136.

Patentee should use document code PET.OP if electronically filing a request for reconsideration of this patent term adjustment calculation. The patentee must also include the information required by 37 CFR 1.705(b)(2) and the fee required by 37 CFR 1.18(e). If patentee does not file a timely request for reconsideration of this patent term adjustment calculation including the information required by 37 CFR 1.705(b)(2) and the fee required by 37 CFR 1.18(e), the USPTO will issue a certificate of correction reflecting the PTA determination noted above.

Patentee should be aware that in order to preserve the right to review in the United States District Court for the District of Columbia of the USPTO patent term adjustment determination, patentee must ensure that he or she also take the steps required under 35 U.S.C. 154(b)(4)(A) in a timely manner. Nothing in the request for recalculation should be construed as providing an alternative time frame for commencing a civil action under 35 U.S.C. 154(b)(4)(A).

Any questions concerning this decision should be directed to the Office of Patent Legal Administration at 571-272-7702.

UNITED STATES PATENT AND TRADEMARK OFFICE

UNITED STATES DEPARTMENT OF COMMERCE
United States Patent and Trademark Office
Address: COMMISSIONER FOR PATENTS
P.O. Box 1450
Alexandria, Virginia 22313-1450
www.uspto.gov

MBHB/TRADING TECHNOLOGIES
300 SOUTH WACKER DRIVE
SUITE 3200
CHICAGO, IL 60606

Mail Date: 04/20/2010

Applicant	: Robert A. West	: DECISION ON REQUEST FOR
Patent Number	: 7584143	: RECALCULATION of PATENT
Issue Date	: 09/01/2009	: TERM ADJUSTMENT IN VIEW
Appliction No	: 11/416,472	: OF WYETH AND NOTICE OF INTENT TO
Filed	: 05/02/2006	: ISSUE CERTIFICATE OF CORRECTION
		:

The Request for Recalculation is **GRANTED** to the extent indicated.

The patent term adjustment has been determined to be **0** days. The USPTO will *sua sponte* issue a certificate of correction reflecting the amount of PTA days determined by the recalculation.

Prior to the issuance of the certificate of correction, the USPTO will afford patentee an opportunity to be heard and request reconsideration. Accordingly, patentee has **one month or thirty (30) days**, whichever is longer, to file a request for reconsideration of this patent term adjustment calculation. See 35 U.S.C. 154(b)(3)(B)(ii) and 37 CFR 1.322(a)(4). No extensions of time will be granted under 37 CFR 1.136.

Patentee should use document code PET.OP if electronically filing a request for reconsideration of this patent term adjustment calculation. The patentee must also include the information required by 37 CFR 1.705(b)(2) and the fee required by 37 CFR 1.18(e). If patentee does not file a timely request for reconsideration of this patent term adjustment calculation including the information required by 37 CFR 1.705(b)(2) and the fee required by 37 CFR 1.18(e), the USPTO will issue a certificate of correction reflecting the PTA determination noted above.

Patentee should be aware that in order to preserve the right to review in the United States District Court for the District of Columbia of the USPTO patent term adjustment determination, patentee must ensure that he or she also take the steps required under 35 U.S.C. 154(b)(4)(A) in a timely manner. Nothing in the request for recalculation should be construed as providing an alternative time frame for commencing a civil action under 35 U.S.C. 154(b)(4)(A).

Any questions concerning this decision should be directed to the Office of Patent Legal Administration at 571-272-7702.

UNITED STATES PATENT AND TRADEMARK OFFICE

Commissioner for Patents
United States Patent and Trademark Office
P.O. Box 1450
Alexandria, VA 22313-1450
www.uspto.gov

BRIAN ROFFE, ESQ
540-B WILLOW AVENUE
CEDARHURST NY 11516-2211

COPY MAILED

NOV 09 2009

OFFICE OF PETITIONS

In re Reissue Application of David S. Breed Reissue Application No. RE40073 Filed: May 1, 2006 Original Patent No. 6,919,803 Issue Date: July 19, 2005 For: Low Power Remote Asset MONITORING	: : : : : : :	ON PETITION

This is a decision on the petition under 37 CFR 1.378(c), filed September 9, 2009, to accept the unintentionally delayed payment of a maintenance fee for the above-identified patent.

The petition is **GRANTED**.

Petitioner has demonstrated to the satisfaction of the Director that the delay in timely paying the maintenance fee was unintentional.

The maintenance fee is hereby accepted and the above-identified patent is reinstated as of the mail date of this decision.

Telephone inquiries concerning this decision should be directed to JoAnne Burke at (571) 272-4584.

Ramesh Krishnamurthy

Ramesh Krishnamurthy
Petitions Examiner
Office of Petitions

UNITED STATES PATENT AND TRADEMARK OFFICE

UNITED STATES DEPARTMENT OF COMMERCE
United States Patent and Trademark Office
Address: COMMISSIONER FOR PATENTS
P.O. Box 1450
Alexandria, Virginia 22313-1450
www.uspto.gov

SIEMENS CORPORATION
INTELLECTUAL PROPERTY DEPARTMENT
170 WOOD AVENUE SOUTH
ISELIN, NJ 08830

Mail Date: 05/06/2010

Applicant	: Josef Chalupper	: DECISION ON REQUEST FOR
Patent Number	: 7650005	: RECALCULATION of PATENT
Issue Date	: 01/19/2010	: TERM ADJUSTMENT IN VIEW
Application No	: 11/416,494	: OF WYETH AND NOTICE OF INTENT TO
Filed	: 05/02/2006	: ISSUE CERTIFICATE OF CORRECTION
		:

The Request for Recalculation is **GRANTED** to the extent indicated.

The patent term adjustment has been determined to be **932** days. The USPTO will *sua sponte* issue a certificate of correction reflecting the amount of PTA days determined by the recalculation.

Prior to the issuance of the certificate of correction, the USPTO will afford patentee an opportunity to be heard and request reconsideration. Accordingly, patentee has **one month or thirty (30) days**, whichever is longer, to file a request for reconsideration of this patent term adjustment calculation. See 35 U.S.C. 154(b)(3)(B)(ii) and 37 CFR 1.322(a)(4). No extensions of time will be granted under 37 CFR 1.136.

Patentee should use document code PET.OP if electronically filing a request for reconsideration of this patent term adjustment calculation. The patentee must also include the information required by 37 CFR 1.705(b)(2) and the fee required by 37 CFR 1.18(e). If patentee does not file a timely request for reconsideration of this patent term adjustment calculation including the information required by 37 CFR 1.705(b)(2) and the fee required by 37 CFR 1.18(e), the USPTO will issue a certificate of correction reflecting the PTA determination noted above.

Patentee should be aware that in order to preserve the right to review in the United States District Court for the District of Columbia of the USPTO patent term adjustment determination, patentee must ensure that he or she also take the steps required under 35 U.S.C. 154(b)(4)(A) in a timely manner. Nothing in the request for recalculation should be construed as providing an alternative time frame for commencing a civil action under 35 U.S.C. 154(b)(4)(A).

Any questions concerning this decision should be directed to the Office of Patent Legal Administration at 571-272-7702.

UNITED STATES PATENT AND TRADEMARK OFFICE

Commissioner for Patents
United States Patent and Trademark Office
P.O. Box 1450
Alexandria, VA 22313-1450
www.uspto.gov

UNISYS CORPORATION
UNISYS WAY
MAIL STATION: S1-108
BLUE BELL PA 19424

MAILED

JUL 01 2010

OFFICE OF PETITIONS

In re Application of	:	
Glenn C. BECKER	:	
Application No. 11/416,503	:	DECISION ON PETITION
Filed: May 1, 2006	:	
Docket No. VA010	:	

This is a decision on the petition under the unintentional provisions of 37 CFR 1.137(b), filed April 12, 2010, to revive the above-identified application.

The petition is **GRANTED**.

The application became abandoned for failure to timely file a reply within the meaning of 37 CFR 1.113 to the final Office action of August 24, 2009. The proposed reply required for consideration of a petition to revive must be a Notice of Appeal (and appeal fee required by 37 CFR 41.20(b)(2), an amendment that *prima facie* places the application in condition for allowance, a Request for Continued Examination and submission (37 CFR 1.114), or the filing of a continuing application under 37 CFR 1.53(b). See MPEP 711.03(c)(II)(A)(2). No extensions of time pursuant to the provisions of 37 CFR 1.136(a) were obtained. Accordingly, the date of abandonment of this application is November 25, 2009.

The petition satisfies the requirements of 37 CFR 1.137(b) in that petitioner has supplied (1) the reply in the form of an amendment, (2) the petition fee of $1620; and (3) the required statement of unintentional delay.

The examiner assigned to this application has approved entry of the Amendment filed with the petition dated April 12, 2009.

An extension of time under 37 CFR 1.136 must be filed prior to the expiration of the maximum extendable period for reply. *See* In re Application of S., 8 USPQ2d 1630, 1631 (Comm'r Pats. 1988). Since the $1110 extension of time fee submitted with the petition on April 12, 2010, was subsequent to the maximum extendable period for reply, this fee is unnecessary and will be credited to petitioner's Deposit Account No. 19-3790.

Telephone inquiries concerning this decision should be directed to the undersigned at (571) 272-6735.

This application is being referred to Technology Center AU 2624 for appropriate action by the Examiner in the normal course of business.

/dcg/
Diane C. Goodwyn
Petitions Examiner
Office of Petitions

UNITED STATES PATENT AND TRADEMARK OFFICE

Commissioner for Patents
United States Patent and Trademark Office
P.O. Box 1450
Alexandria, VA 22313-1450
www.uspto.gov

FOLEY AND LARDNER LLP
SUITE 500, 3000 K STREET NW
WASHINGTON, DC 20007

COPY MAILED

OCT 3 1 2008

OFFICE OF PETITIONS

In re Application of	:	
Yaoquan LIU, et al	:	
Application No. 11/416,519	:	DECISION ON PETITION
Filed: May 2, 2006	:	TO WITHDRAW
Attorney Docket No. 026579-0157	:	FROM RECORD
	:	

This is a decision on the Request to Withdraw as attorney or agent of record under 37 C.F.R. § 1.36(b), filed September 25, 2008.

The request is **APPROVED**.

A grantable request to withdraw as attorney/agent of record must be signed by every attorney/agent seeking to withdraw or contain a clear indication that one attorney is signing on behalf of another/others. The Office requires the practitioner(s) requesting withdrawal to certify that he, she, or they have: (1) given reasonable notice to the client, prior to the expiration of the response period, that the practitioner(s) intends to withdraw from employment; (2) delivered to the client or a duly authorized representative of the client all papers and property (including funds) to which the client is entitled; and (3) notified the client of any responses that may be due and the time frame within which the client must respond, pursuant 37 CFR 10.40(c).

The request was signed by Michele Simkin on behalf of all attorneys associated with Customer Number 22428.

All attorneys of record associated with Customer Number 22428 have been withdrawn.

All future communications from the Office will be directed to the address indicated below until otherwise properly notified by the applicant.

In order to request or take action in a patent matter, the assignee must establish its ownership of the patent to the satisfaction of the Director. In this regard, a Statement under 37 CFR 3.73(b) must have either: (i) documentary evidence of a chain of title from the original owner to the assignee (*e.g.*, copy of an executed assignment), and a statement affirming that the documentary evidence of the chain of title from the original owner to the assignee was or concurrently is being submitted for recordation pursuant to § 3.11; or (ii) a statement specifying where documentary evidence of a

chain of title from the original owner to the assignee is recorded in the assignment records of the Office (*e.g.*, reel and frame number).

Telephone inquiries concerning this decision should be directed to the undersigned at 571-272-6735.

Diane Goodwyn
Petitions Examiner
Office of Petitions

cc: YAOQUAN LIU
C/O 3832 BAY CENTER PLACE,
HAYWAY, CA 94545

UNITED STATES PATENT AND TRADEMARK OFFICE

Commissioner for Patents
United States Patent and Trademark Office
P.O. Box 1450
Alexandria, VA 22313-1450
www.uspto.gov

FITZPATRICK CELLA HARPER & SCINTO
1290 Avenue of the Americas
NEW YORK NY 10104-3800

COPY MAILED
MAR 09 2010

In re Patent No. 7,582,611	:
Liu et al.	: DECISION ON REQUEST FOR
Issue Date: September 1, 2009	: RECONSIDERATION OF
Application No. 11/416,519	: PATENT TERM ADJUSTMENT
Filed: May 2, 2006	: AND NOTICE OF INTENT
Attorney Docket No.	: TO ISSUE CERTIFICATE OF
00874.100160	: CORRECTION
Title: Motilide Compounds	:

This is a decision on the petition filed on October 16, 2009, which is being treated as a petition under 37 CFR 1.705(d) requesting that the patent term adjustment indicated on the above-identified patent be corrected to indicate that the term of the above-identified patent is extended or adjusted by five hundred thirty-two (532) days.

The petition to correct the patent term adjustment indicated on the above-identified patent to indicate that the term of the above-identified patent is extended or adjusted by five hundred thirty-two (532) days is **GRANTED.**

The application is being forwarded to the Certificates of Branch for issuance of a certificate of correction. The Office will issue a certificate of correction indicating that the term of the above-identified patent is extended or adjusted by five hundred thirty-two (532) days.

The Office acknowledges submission of the $200.00 fee set forth in 37 CFR 1.18(e). No additional fees are required.

Telephone inquiries specific to this matter should be directed to Petitions Attorney, Charlema Grant at (571) 272-3215.

/Kery A. Fries/

Kery Fries
Senior Legal Advisor Attorney
Office of Patent Legal Administration
Office of Associate Commissioner
For Patent Examination Policy

Enclosure: Copy of DRAFT Certificate of Correction

UNITED STATES PATENT AND TRADEMARK OFFICE

CERTIFICATE OF CORRECTION

PATENT : 7,582,611 B2

DATED : **September 1, 2009** **DRAFT**

INVENTOR(S) : Liu et al.

It is certified that error appears in the above-identified patent and that said Letters Patent is hereby corrected as shown below:

On the cover page,

[*] Notice: Subject to any disclaimer, the term of this patent is extended or adjusted under 35 USC 154(b) by 410 days

Delete the phrase "by 410 days" and insert – by 532 days--

UNITED STATES PATENT AND TRADEMARK OFFICE

UNITED STATES DEPARTMENT OF COMMERCE
United States Patent and Trademark Office
Address: COMMISSIONER FOR PATENTS
P.O. Box 1450
Alexandria, Virginia 22313-1450
www.uspto.gov

FITZPATRICK CELLA HARPER & SCINTO
1290 Avenue of the Americas
NEW YORK, NY 10104-3800

Mail Date: 04/21/2010

Applicant	: Yaoquan Liu	: DECISION ON REQUEST FOR
Patent Number	: 7582611	: RECALCULATION of PATENT
Issue Date	: 09/01/2009	: TERM ADJUSTMENT IN VIEW
Appliction No	: 11/416,519	: OF WYETH AND NOTICE OF INTENT TO
Filed	: 05/02/2006	: ISSUE CERTIFICATE OF CORRECTION
		:

The Request for Recalculation is **GRANTED** to the extent indicated.

The patent term adjustment has been determined to be **532** days. The USPTO will *sua sponte* issue a certificate of correction reflecting the amount of PTA days determined by the recalculation.

Prior to the issuance of the certificate of correction, the USPTO will afford patentee an opportunity to be heard and request reconsideration. Accordingly, patentee has **one month or thirty (30) days**, whichever is longer, to file a request for reconsideration of this patent term adjustment calculation. See 35 U.S.C. 154(b)(3)(B)(ii) and 37 CFR 1.322(a)(4). No extensions of time will be granted under 37 CFR 1.136.

Patentee should use document code PET.OP if electronically filing a request for reconsideration of this patent term adjustment calculation. The patentee must also include the information required by 37 CFR 1.705(b)(2) and the fee required by 37 CFR 1.18(e). If patentee does not file a timely request for reconsideration of this patent term adjustment calculation including the information required by 37 CFR 1.705(b)(2) and the fee required by 37 CFR 1.18(e), the USPTO will issue a certificate of correction reflecting the PTA determination noted above.

Patentee should be aware that in order to preserve the right to review in the United States District Court for the District of Columbia of the USPTO patent term adjustment determination, patentee must ensure that he or she also take the steps required under 35 U.S.C. 154(b)(4)(A) in a timely manner. Nothing in the request for recalculation should be construed as providing an alternative time frame for commencing a civil action under 35 U.S.C. 154(b)(4)(A).

Any questions concerning this decision should be directed to the Office of Patent Legal Administration at 571-272-7702.

UNITED STATES PATENT AND TRADEMARK OFFICE

UNITED STATES DEPARTMENT OF COMMERCE
United States Patent and Trademark Office
Address: COMMISSIONER FOR PATENTS
P.O. Box 1450
Alexandria, Virginia 22313-1450
www.uspto.gov

MCANDREWS HELD & MALLOY, LTD
500 WEST MADISON STREET
SUITE 3400
CHICAGO, IL 60661

Mail Date: 04/21/2010

Applicant	: Arthur J. Carlson	: DECISION ON REQUEST FOR
Patent Number	: 7593476	: RECALCULATION of PATENT
Issue Date	: 09/22/2009	: TERM ADJUSTMENT IN VIEW
Appliction No	: 11/416,541	: OF WYETH AND NOTICE OF INTENT TO
Filed	: 05/03/2006	: ISSUE CERTIFICATE OF CORRECTION
		:

The Request for Recalculation is **GRANTED** to the extent indicated.

The patent term adjustment has been determined to be **538** days. The USPTO will *sua sponte* issue a certificate of correction reflecting the amount of PTA days determined by the recalculation.

Prior to the issuance of the certificate of correction, the USPTO will afford patentee an opportunity to be heard and request reconsideration. Accordingly, patentee has **one month or thirty (30) days**, whichever is longer, to file a request for reconsideration of this patent term adjustment calculation. See 35 U.S.C. 154(b)(3)(B)(ii) and 37 CFR 1.322(a)(4). No extensions of time will be granted under 37 CFR 1.136.

Patentee should use document code PET.OP if electronically filing a request for reconsideration of this patent term adjustment calculation. The patentee must also include the information required by 37 CFR 1.705(b)(2) and the fee required by 37 CFR 1.18(e). If patentee does not file a timely request for reconsideration of this patent term adjustment calculation including the information required by 37 CFR 1.705(b)(2) and the fee required by 37 CFR 1.18(e), the USPTO will issue a certificate of correction reflecting the PTA determination noted above.

Patentee should be aware that in order to preserve the right to review in the United States District Court for the District of Columbia of the USPTO patent term adjustment determination, patentee must ensure that he or she also take the steps required under 35 U.S.C. 154(b)(4)(A) in a timely manner. Nothing in the request for recalculation should be construed as providing an alternative time frame for commencing a civil action under 35 U.S.C. 154(b)(4)(A).

Any questions concerning this decision should be directed to the Office of Patent Legal Administration at 571-272-7702.

UNITED STATES PATENT AND TRADEMARK OFFICE

Commissioner for Patents
United States Patent and Trademark Office
P.O. Box 1450
Alexandria, VA 22313-1450
www.uspto.gov

CRAIG W. RODDY
HALLIBURTON ENERGY SERVICES
P.O. BOX 1431
DUNCAN, OK 73536-0440

COPY MAILED
JUL 0 7 2006
OFFICE OF PETITIONS

In re Application of	:	
Craig W. Roddy et al	:	
Application No. 11/416,563	:	DECISION ON PETITION
Filed: May 3, 2006	:	TO MAKE SPECIAL UNDER
Attorney Docket No. 2005-IP-017636U1P1	:	37 CFR 1.102(c)(1)

This is a decision on the petition under 37 CFR 1.102(c)(1), filed May 3, 2006, to make the above-identified application special based on applicant's age as set forth in M.P.E.P. § 708.02, Section IV.

The petition is **GRANTED**.

A grantable petition to make an application special under 37 CFR 1.102(c)(1) and MPEP § 708.02, Section IV: Applicant's Age must be accompanied by evidence showing that at least one of the applicants is 65 years of age, or more, such as a birth certificate or a statement by applicant. No fee is required.

The petition includes a statement by Jiten Chatterji attesting that he is over 65 years of age. Accordingly, the above-identified application has been accorded "special" status.

Telephone inquiries concerning this decision should be directed to Wan Laymon at 571-272-3220.

All other inquiries concerning either the examination or status of the application should be directed to the Technology Center.

This application is being referred to Technology Center AU 3676 for action on the merits commensurate with this decision.

Wan Laymon
Wan Laymon
Petitions Examiner
Office of Petitions

UNITED STATES PATENT AND TRADEMARK OFFICE

Commissioner for Patents
United States Patent and Trademark Office
P.O. Box 1450
Alexandria, VA 22313-1450
www.uspto.gov

BUSKOP LAW GROUP, P.C.
1776 YORKTOWN STREET, SUITE 550
HOUSTON, TX 77056

COPY MAILED
SEP 0 5 2006
OFFICE OF PETITIONS

In re Application of	:	
Donald Frank Tandy Jr. et al	:	
Application No. 11/416,596	:	DECISION ON PETITION
Filed: May 3, 2006	:	TO MAKE SPECIAL UNDER
Attorney Docket No. 1419.01	:	37 CFR 1.102(c)(1)
	:	

This is a decision on the petition under 37 CFR 1.102(c)(1), filed March 3, 2006, to make the above-identified application special based on applicant's age as set forth in M.P.E.P. § 708.02, Section IV.

The petition is **GRANTED**.

A grantable petition to make an application special under 37 CFR 1.102(c)(1) and MPEP § 708.02, Section IV: Applicant's Age must be accompanied by evidence showing that at least one of the applicants is 65 years of age, or more, such as a birth certificate or a statement by applicant. No fee is required

The instant petition includes a copy of Inventor Donald F. Tandy's driver license showing that he is over 65 years of age. Accordingly, the above-identified application has been accorded "special" status.

Telephone inquiries concerning this decision should be directed to Irvin Dingle at 571-272-3210.

All other inquiries concerning either the examination or status of the application should be directed to the Technology Center.

The application is being forwarded to the Technology Center Art Unit 3611 for action on the merits commensurate with this decision.

Irvin Dingle
Petitions Examiner
Office of Petitions

UNITED STATES PATENT AND TRADEMARK OFFICE

Commissioner for Patents
United States Patent and Trademark Office
P.O. Box 1450
Alexandria, VA 22313-1450
www.uspto.gov

JOHN S. PRATT, ESQ
KILPATRICK STOCKTON, LLP
1100 PEACHTREE STREET
SUITE 2800
ATLANTA, GA 30309

COPY MAILED

APR 13 2009

OFFICE OF PETITIONS

In re Application of
MILLER, Toby et al.
Application No. 11/416,599
Filed: May 03, 2006
Attorney Docket No. **W2100/321632**

DECISION ON PETITION
TO WITHDRAW
FROM RECORD

This is a decision on the Request to Withdraw as attorney or agent of record under 37 C.F.R. § 1.36(b), filed March 11, 2009.

The request is not approved because it is **moot**.

A review of the file record indicates that the power of attorney to KILPATRICK STOCKTON, LLP has been revoked by the assignee of the patent application on March 24, 2009. Accordingly, the request to withdraw under 37 C.F.R. § 1.36(b) is moot.

All future communications from the Office will continue to be directed to the below-listed address until otherwise notified by applicant.

Telephone inquires concerning this decision should be directed to Tredelle Jackson at 571-272-2783.

Tredelle D. Jackson
Paralegal Specialist
Office of Petitions

cc: **RICHARD B. NETTLES**
40230 COTTON FIELD AVE.
GONZALES LA 70737-6798

UNITED STATES PATENT AND TRADEMARK OFFICE

Commissioner for Patents
United States Patent and Trademark Office
P.O. Box 1450
Alexandria, VA 22313-1450
www.uspto.gov

MERONI & MERONI, P.C.
P.O. BOX 309
BARRIINGTON, IL 60011

COPY MAILED

DEC 0 4 2006

OFFICE OF PETITIONS

In re Application of	:	
John H. Robson	:	
Application No. 11/416,604	:	DECISION ON PETITION
Filed: May 3, 2006	:	TO MAKE SPECIAL UNDER
Attorney Docket No. 06115	:	37 CFR 1.102(c)(1)
	:	

This is a decision on the petition under 37 CFR 1.102(c)(1), filed May 3, 2006, to make the above-identified application special based on applicant's age as set forth in M.P.E.P. § 708.02, Section IV.

The petition is **GRANTED**.

A grantable petition to make an application special under 37 CFR 1.102(c)(1) and MPEP § 708.02, Section IV: Applicant's Age must be accompanied by evidence showing that at least one of the applicants is 65 years of age, or more, such as a birth certificate or a statement by applicant. No fee is required

The instant petition includes a statement from Inventor John H. Robson stating that he is over 65 years of age. Accordingly, the above-identified application has been accorded "special" status.

Telephone inquiries concerning this decision should be directed to Irvin Dingle at 571-272-3210.

All other inquiries concerning either the examination or status of the application should be directed to the Technology Center.

The application is being forwarded to the Technology Center Art Unit 2834 for action on the merits commensurate with this decision.

Irvin Dingle
Petitions Examiner
Office of Petitions

UNITED STATES PATENT AND TRADEMARK OFFICE

Commissioner for Patents
United States Patent and Trademark Office
P.O. Box 1450
Alexandria, VA 22313-1450
www.uspto.gov

EXXONMOBIL CHEMICAL COMPANY
5200 BAYWAY DRIVE
P.O. BOX 2149
BAYTOWN TX 77522-2149

COPY MAILED

MAY 01 2009

OFFICE OF PETITIONS

In re Application of	:	
Mehta, et al.	:	
Application No. 11/416,605	:	DECISION DISMISSING PETITION
Filed: May 3, 2006	:	UNDER 37 CFR 1.78(a)(3)
Attorney Docket No. 2003B107/2	:	

This is a decision on the petition under 37 CFR 1.78(a)(3), filed March 27, 2009, to accept an unintentionally delayed claim under 35 U.S.C. §120 for the benefit of priority to the prior-filed applications listed in the concurrently filed amendment.

The petition is **DISMISSED**.

A petition for acceptance of a claim for late priority under 37 CFR 1.78(a)(3) is only applicable to those applications filed on or after November 29, 2000 and after the expiration of the period specified in 37 CFR 1.78(a)(2)(ii). In addition, the petition under 37 CFR 1.78(a)(3) must be accompanied by:

(1) the reference required by 35 U.S.C. § 120 and 37 CFR 1.78(a)(2)(i) of the prior-filed application, unless previously submitted;
(2) the surcharge set forth in § 1.17(t); and
(3) a statement that the entire delay between the date the claim was due under 37 CFR 1.78(a)(2)(ii) and the date the claim was filed was unintentional. The Director may require additional information where there is a question whether the delay was unintentional.

The amendment as drafted is unacceptable. It is not possible for the present application to claim direct benefit of Application No. 10/406,036 because Application No. 10/406,036 matured into Patent No. 6,809,168 on October 26, 2004. The present application was filed on May 3, 2006. Thus, appears to be no copendency between the two applications and all applications in the benefit chain following Application No. 10/406,036 cannot be entered.

In addition, petitioners are informed that the Office database does not list Application No. 09/734,479 as a continuation-in-part of PCT/US00/33612.

Further correspondence with respect to this matter should be addressed as follows:

By mail: Mail Stop PETITIONS
Commissioner for Patents
Post Office Box 1450
Alexandria, VA 22313-1450

By hand: Customer Service Window
Mail Stop Petitions
Randolph Building
401 Dulany Street
Alexandria, VA 22314

By fax: (571) 273-8300
ATTN: Office of Petitions

Any questions concerning this matter may be directed to the undersigned at (571) 272-3230.

Shirene Willis Brantley

Shirene Willis Brantley
Senior Petitions Attorney
Office of Petitions

UNITED STATES PATENT AND TRADEMARK OFFICE

Commissioner for Patents
United States Patent and Trademark Office
P.O. Box 1450
Alexandria, VA 22313-1450
www.uspto.gov

EXXONMOBIL CHEMICAL COMPANY
5200 BAYWAY DRIVE
P.O. BOX 2149
BAYTOWN TX 77522-2149

MAILED

JUN 17 2009

OFFICE OF PETITIONS

In re Application of	:	
Mehta, et al.	:	
Application No. 11/416,605	:	DECISION DISMISSING PETITION
Filed: May 3, 2006	:	UNDER 37 CFR 1.78(a)(3)
Attorney Docket No. 2003B107/2	:	

This is a decision on the renewed petition under 37 CFR 1.78(a)(3), filed May 13, 2009, to accept an unintentionally delayed claim under 35 U.S.C. §120 for the benefit of priority to the prior-filed applications listed in the concurrently filed amendment.

The petition is **DISMISSED**.

A petition for acceptance of a claim for late priority under 37 CFR 1.78(a)(3) is only applicable to those applications filed on or after November 29, 2000 and after the expiration of the period specified in 37 CFR 1.78(a)(2)(ii). In addition, the petition under 37 CFR 1.78(a)(3) must be accompanied by:

(1) the reference required by 35 U.S.C. § 120 and 37 CFR 1.78(a)(2)(i) of the prior-filed application, unless previously submitted;
(2) the surcharge set forth in § 1.17(t); and
(3) a statement that the entire delay between the date the claim was due under 37 CFR 1.78(a)(2)(ii) and the date the claim was filed was unintentional. The Director may require additional information where there is a question whether the delay was unintentional.

The amendment is unacceptable. The petition filed on May 13, 2009 in Application No. 10/694,150 is concurrently being dismissed because Application No. 09/734,479 is not a continuation-in-part of PCT/US00/33612. Appropriate benefit claims must be made in each intermediate application in the chain of prior applications. Petitioners are informed that the Office database does not list Application No. 09/734,479 as a continuation-in-part of PCT/US00/33612. A review of Application No. 09/734,479 reveals no reference to PCT/US00/33612, let alone a claim of benefit to it. Until Application No. 09/734,479 contains a proper priority claim to PCT/US00/33612 (via a Rule 78(a)(3) petition) and a renewed Rule

78(a)(3) petition in Application No. 10/694,150 is granted, the priority claim as currently presented in this application will not be accepted.

Further correspondence with respect to this matter should be addressed as follows:

By mail: Mail Stop PETITIONS
Commissioner for Patents
Post Office Box 1450
Alexandria, VA 22313-1450

By hand: Customer Service Window
Mail Stop Petitions
Randolph Building
401 Dulany Street
Alexandria, VA 22314

By fax: (571) 273-8300
ATTN: Office of Petitions

Any questions concerning this matter may be directed to the undersigned at (571) 272-3230.

Shirene Willis Brantley

Shirene Willis Brantley
Senior Petitions Attorney
Office of Petitions

UNITED STATES PATENT AND TRADEMARK OFFICE

UNITED STATES DEPARTMENT OF COMMERCE
United States Patent and Trademark Office
Address: COMMISSIONER FOR PATENTS
P.O. Box 1450
Alexandria, Virginia 22313-1450
www.uspto.gov

PROSKAUER ROSE LLP
ONE INTERNATIONAL PLACE
BOSTON, MA 02110

Mail Date: 04/21/2010

Applicant	: Michael Miller	: DECISION ON REQUEST FOR
Patent Number	: 7611908	: RECALCULATION of PATENT
Issue Date	: 11/03/2009	: TERM ADJUSTMENT IN VIEW
Appliction No	: 11/416,624	: OF WYETH AND NOTICE OF INTENT TO
Filed	: 05/02/2006	: ISSUE CERTIFICATE OF CORRECTION
		:

The Request for Recalculation is **GRANTED** to the extent indicated.

The patent term adjustment has been determined to be **368** days. The USPTO will *sua sponte* issue a certificate of correction reflecting the amount of PTA days determined by the recalculation.

Prior to the issuance of the certificate of correction, the USPTO will afford patentee an opportunity to be heard and request reconsideration. Accordingly, patentee has **one month or thirty (30) days**, whichever is longer, to file a request for reconsideration of this patent term adjustment calculation. See 35 U.S.C. 154(b)(3)(B)(ii) and 37 CFR 1.322(a)(4). No extensions of time will be granted under 37 CFR 1.136.

Patentee should use document code PET.OP if electronically filing a request for reconsideration of this patent term adjustment calculation. The patentee must also include the information required by 37 CFR 1.705(b)(2) and the fee required by 37 CFR 1.18(e). If patentee does not file a timely request for reconsideration of this patent term adjustment calculation including the information required by 37 CFR 1.705(b)(2) and the fee required by 37 CFR 1.18(e), the USPTO will issue a certificate of correction reflecting the PTA determination noted above.

Patentee should be aware that in order to preserve the right to review in the United States District Court for the District of Columbia of the USPTO patent term adjustment determination, patentee must ensure that he or she also take the steps required under 35 U.S.C. 154(b)(4)(A) in a timely manner. Nothing in the request for recalculation should be construed as providing an alternative time frame for commencing a civil action under 35 U.S.C. 154(b)(4)(A).

Any questions concerning this decision should be directed to the Office of Patent Legal Administration at 571-272-7702.

UNITED STATES PATENT AND TRADEMARK OFFICE

UNITED STATES DEPARTMENT OF COMMERCE
United States Patent and Trademark Office
Address: COMMISSIONER FOR PATENTS
P.O. Box 1450
Alexandria, Virginia 22313-1450
www.uspto.gov

SCHWEGMAN, LUNDBERG & WOESSNER / ATMEL
P.O. BOX 2938
MINNEAPOLIS, MN 55402

Mail Date: 05/21/2010

Applicant	: Majid Kaabouch	: DECISION ON REQUEST FOR
Patent Number	: 7647486	: RECALCULATION of PATENT
Issue Date	: 01/12/2010	: TERM ADJUSTMENT IN VIEW
Application No	: 11/416,651	: OF WYETH AND NOTICE OF INTENT TO
Filed	: 05/02/2006	: ISSUE CERTIFICATE OF CORRECTION
		:

The Request for Recalculation is **GRANTED** to the extent indicated.

The patent term adjustment has been determined to be **44** days. The USPTO will *sua sponte* issue a certificate of correction reflecting the amount of PTA days determined by the recalculation.

Prior to the issuance of the certificate of correction, the USPTO will afford patentee an opportunity to be heard and request reconsideration. Accordingly, patentee has **one month or thirty (30) days**, whichever is longer, to file a request for reconsideration of this patent term adjustment calculation. See 35 U.S.C. 154(b)(3)(B)(ii) and 37 CFR 1.322(a)(4). No extensions of time will be granted under 37 CFR 1.136.

Patentee should use document code PET.OP if electronically filing a request for reconsideration of this patent term adjustment calculation. The patentee must also include the information required by 37 CFR 1.705(b)(2) and the fee required by 37 CFR 1.18(e). If patentee does not file a timely request for reconsideration of this patent term adjustment calculation including the information required by 37 CFR 1.705(b)(2) and the fee required by 37 CFR 1.18(e), the USPTO will issue a certificate of correction reflecting the PTA determination noted above.

Patentee should be aware that in order to preserve the right to review in the United States District Court for the District of Columbia of the USPTO patent term adjustment determination, patentee must ensure that he or she also take the steps required under 35 U.S.C. 154(b)(4)(A) in a timely manner. Nothing in the request for recalculation should be construed as providing an alternative time frame for commencing a civil action under 35 U.S.C. 154(b)(4)(A).

Any questions concerning this decision should be directed to the Office of Patent Legal Administration at 571-272-7702.

UNITED STATES PATENT AND TRADEMARK OFFICE

Commissioner for Patents
United States Patent and Trademark Office
P.O. Box 1450
Alexandria, VA 22313-1450
www.uspto.gov

COPY MAILED

AUG 27 2007

OFFICE OF PETITIONS

Dechert LLP
P.O. Box 390460
Mountain View, CA 94039-0460

In re Application of	:	
Brian Wong	:	
Application No. 11/416,652	:	DECISION ON PETITION
Filed: May 2, 2006	:	TO WITHDRAW
Attorney Docket No. 375462-028US (368515)	:	FROM RECORD
	:	

This is a decision on the Request to Withdraw as attorney or agent of record under 37 C.F.R. § 1.36(b), filed February 23, 2007.

The request is **NOT APPROVED** as moot.

A review of the file record indicates that the power of attorney to Dechert LLP has been revoked by the assignee of the patent application on April 11, 2007. Accordingly, the request to withdraw under 37 C.F.R. § 1.36(b) is moot.

All future communications from the Office will continue to be directed to the below-listed address until otherwise notified by applicant.

Telephone inquires concerning this decision should be directed to Terri Williams at 571-272-2991.

T. Williams
Terri Williams
Petitions Examiner
Office of Petitions

cc: **Rigel Pharmaceuticals Inc.**
C/o Foley & Lardner LLP
1530 Page Mill Road
Palo Alto, CA 94304

UNITED STATES PATENT AND TRADEMARK OFFICE

COMMISSIONER FOR PATENTS
UNITED STATES PATENT AND TRADEMARK OFFICE
P.O. BOX 1450
ALEXANDRIA, VA 22313-1450
WWW.USPTO.GOV

Paper No.

JACKSON WALKER, L.L.P.
112 E. PECAN, SUITE 2400
SAN ANTONIO TX 78205

COPY MAILED

MAR 02 2009

OFFICE OF PETITIONS

In re Application of	:	
Tak Ko Wong	:	
Application No. 11/416,670	:	DECISION ON PETITION
Filed: May 3, 2006	:	PURSUANT TO
Attorney Docket No. P-370.305	:	37 C.F.R. § 1.181(A)
Title: DOLL	:	

This is a decision on the petition pursuant to 37 C.F.R. § 1.181(a) to withdraw the holding of abandonment, filed on January 28, 2009.

BACKGROUND

The above-identified application became abandoned for failure to reply in a timely manner to the non-final Office action, mailed June 30, 2008, which set a shortened statutory period for reply of three months. No response was received, and no extensions of time under the provisions of 37 C.F.R. § 1.136(a) were requested. Accordingly, the above-identified application became abandoned on October 1, 2008. A notice of abandonment was mailed on January 8, 2009.

RELEVANT PORTION OF THE C.F.R.

37 C.F.R. § 1.8(b) sets forth, *in toto*:

> (b) In the event that correspondence is considered timely filed by being mailed or transmitted in accordance with paragraph (a)

of this section, but not received in the U.S. Patent and Trademark Office after a reasonable amount of time has elapsed from the time of mailing or transmitting of the correspondence, or after the application is held to be abandoned, or after the proceeding is dismissed, terminated, or decided with prejudice, the correspondence will be considered timely if the party who forwarded such correspondence:

(1) Informs the Office of the previous mailing or transmission of the correspondence promptly after becoming aware that the Office has no evidence of receipt of the correspondence;

(2) Supplies an additional copy of the previously mailed or transmitted correspondence and certificate; and

(3) Includes a statement which attests on a personal knowledge basis or to the satisfaction of the Director to the previous timely mailing or transmission. If the correspondence was sent by facsimile transmission, a copy of the sending unit's report confirming transmission may be used to support this statement.

ANALYSIS

With this petition, Petitioner has alleged that a response was timely filed on December 30, 2008. Petitioner has further included a copy of this response, and it is noted that it contains a certificate of mailing dated December 30, 2008. Petitioner has also included a statement that attests on a personal knowledge basis to the previous timely mailing.

The electronic file has been reviewed, and a copy of this response has been located in the same. It is clear that this submission was received on January 5, 2009. Moreover, Office records reflect the receipt of the fee that is associated with the filing of a petition for a three-month extension of time on January 5, 2009.

Considering the facts and circumstances of the delay at issue, as set forth on petition, it is concluded that Petitioner has met his burden of establishing that a response was timely submitted.

Accordingly, the petition pursuant to 37 C.F.R. § 1.181(a) is **GRANTED**. The holding of abandonment is **WITHDRAWN**.

Petitioner may find it beneficial to view Private PAIR within a fortnight of the present decision to ensure that the withdrawal of the holding of abandonment has been acknowledged by the Technology Center in response to this decision. It is noted that all inquiries with regard to any failure of that change in status should be directed to the Technology Center where that change of status must be effected - **the Office of Petitions cannot effectuate a change of status.**

The Technology Center will be notified of this decision. The Technology Center's support staff will notify the Examiner of this decision, so that the amendment that was received on January 5, 2009 can be processed in due course.

Telephone inquiries regarding this decision should be directed to the undersigned at (571) 272-3225.[1] All other inquiries concerning examination procedures or status of the application should be directed to the Technology Center.

/Paul Shanoski/
Paul Shanoski
Senior Attorney
Office of Petitions

---

1 Petitioner will note that all practice before the Office should be in writing, and the action of the Office will be based exclusively on the written record in the Office. See 37 C.F.R. § 1.2. As such, Petitioner is reminded that no telephone discussion may be controlling or considered authority for Petitioner's further action(s).

UNITED STATES PATENT AND TRADEMARK OFFICE

Commissioner for Patents
United States Patent and Trademark Office
P.O. Box 1450
Alexandria, VA22313-1450
www.uspto.gov

LEONARD TACHNER, A PROFESSIONAL LAW CORPORATION
17961 SKY PARK CIRCLE, SUITE 38-E
IRVINE CA 92614

COPY MAILED
MAR 26 2007
OFFICE OF PETITIONS
ON PETITION

In re Application of :
Phillip L. Lam :
Application No. 11/416,698 :
Filed: May 2, 2006 :
Attorney Docket No. PHIL-3 :

This is a decision on the "Request To Correct Filing Receipt", which is treated as a petition under 37 CFR 1.10 (c), filed August 9, 2006 to correct the filing date to May 2, 2006, rather than the presently accorded filing date of May 3, 2006.

Petitioner alleges that the application was deposited in Express Mail service on May 2, 2006. In support, petitioner supplies a copy of Express Mail Label No. EV830084139US (the same Express Mail number found on the transmittal sheet accompanying the original application papers located in the official file). The "date-in" on the Express Mail Label is May 2, 2006. Additionally, the express mail label bears a USPS postmark of May 2, 2006.

In view of the above, the petition is **GRANTED** and since no fee is due, none will be charged to petitioner's deposit account.

The application is being forwarded to the Office of Initial Patent Examination for correction of the **filing date to May 2, 2006** and for issuance of a corrected filing receipt.

Telephone inquiries related to this matter should be directed to the undersigned Petitions Attorney at (571) 272-3212.

Patricia Faison-Ball

Patricia Faison-Ball
Senior Petitions Attorney
Office of Petitions

UNITED STATES PATENT AND TRADEMARK OFFICE

Commissioner for Patents
United States Patent and Trademark Office
P.O. Box 1450
Alexandria, VA 22313-1450
www.uspto.gov

LEFEVOUR LAW GROUP, LLC
4365 LAWN AVE
SUITE 5
WESTERN SPRINGS, IL 60558

COPY MAILED

APR 07 2008

OFFICE OF PETITIONS

In re Application of	:	
Paul D. Adcock, et al.	:	
Application No. 11/416,710	:	DECISION ON PETITION
Filed: May 3, 2006	:	TO WITHDRAW
Attorney Docket No. 060-019US	:	FROM RECORD
	:	

This is a decision on the Request to Withdraw as attorney or agent of record under 37 C.F.R. § 1.36(b), filed October 15, 2007.

The request is **DISMISSED** as moot.

A review of the file record indicates that the power of attorney to Lefevour Law Group, LLC has been revoked by the assignee of the patent application on January 10, 2008. Accordingly, the request to withdraw under 37 C.F.R. § 1.36(b) is moot.

All future communications from the Office will continue to be directed to the below-listed address until otherwise notified by applicant.

Telephone inquires concerning this decision should be directed to undersigned at 571-272-1642.

April M. Wise
Petitions Examiner
Office of Petitions

cc: CHRIS HOLM, ESQ.
MILBANK, TWEED, HADLEY & MCCLOY, LLP
601 FIGUEROA
LITIGATION/INTELLECTUAL PROPERY
LOIS ANGELES, CA 90017

BEST AVAILABLE COPY

In the United States Patent and Trademark Office

Serial Number: 11/446715

Appn. Filed: 5-3-06

Applicant(s): John Schofield

Appn. Title: Plastic Rock Making Machine And Rocks

Examiner/GAU: 1734

Mailed: _____

At: _____

Petition to Make Special

Commissioner for Patents
P.O. Box 1450
Alexandria, VA 22313-1450

Sir:

Applicant hereby respectfully petitions that the above application be made special under MPEP Sec. 708.02 for the following reason; attached is a declaration in support thereof:

- I. ☐ Manufacturer Available;*
- II. ☐ Infringement Exists;*
- III. ☐ Applicant's Health Is Poor;
- IV. ☒ Applicant's Age Is 65 or Greater;
- V. ☐ Environmental Quality Will Be Enhanced;
- VI. ☐ Energy Savings Will Result;
- VII. ☐ Recombinant DNA Is Involved;*
- VIII. ☐ Special Procedure: Search Was Made;*
- IX. ☐ Superconductivity Is Advanced;
- X. ☐ Relates to HIV/AIDS or Cancer;*
- XI. ☐ Counters Terrorism.*

*☐ Also attached, since reason I, II, VII, VIII, X, or XI has been checked, is the $_____ Petition Fee pursuant to Rules 102 and 17(i).

Very respectfully,

Applicant(s): John Schofield

Attachment(s): Fee if indicated and supporting Declaration

Applicant(s): _____

c/o: _____

Telephone: _____

PETITION GRANTED

William Krynski,
Special Program Examiner
Technology Center 1700
5-23-06

Certificate of Mailing

I certify that this correspondence will be deposited with the United States Postal Service as first class mail with proper postage affixed in an envelope addressed to: "Commissioner for Patents, P.O. Box 1450, Alexandria, VA 22313-1450" on the date below.

Date: 200_____ _____, Applicant

UNITED STATES PATENT AND TRADEMARK OFFICE

Commissioner for Patents
United States Patent and Trademark Office
P.O. Box 1450
Alexandria, VA 22313-1450
www.uspto.gov

YOUNG & BASILE, P.C.
3001 WEST BIG BEAVER ROAD
SUITE 624
TROY, MI 48084

COPY MAILED

NOV 30 2007

OFFICE OF PETITIONS

In re Application of

ULLRICH, Michael E.
Application No. 11/416,716
Filed: May 03, 2006
Attorney Docket No. **YME-101-B**

DECISION ON PETITION
TO WITHDRAW
FROM RECORD

This is a decision on the Request to Withdraw as attorney or agent of record under 37 C.F.R. § 1.36(b), filed October 24, 2007.

The request is **APPROVED**.

A grantable request to withdraw as attorney/agent of record must be signed by every attorney/agent seeking to withdraw or contain a clear indication that one attorney is signing on behalf of another/others. A request to withdraw will not be approved unless at least 30 (thirty) days would remain between the date of approval and the later of the expiration date of a time to file a response or the expiration date of the maximum time period which can be extended under 37 C.F.R. § 1.136(a).

The request was signed by Andrew R. Basile on behalf of all attorneys of record. All attorneys/agents associated have been withdrawn. Applicant is reminded that there is no attorney of record at this time.

All future correspondence will be directed to the first named inventor Michael E. Ullrich at the address indicated below.

There is an outstanding Office action mailed September 26, 2007 that requires a reply from the applicant.

Telephone inquiries concerning this decision should be directed to the undersigned at 571-272-4231.

Michelle R. Eason
Paralegal Specialist
Office of Petitions

cc: **MICHAEL E. ULLRICH**
46536 ERB DRIVE
MACOMB TOWNSHIP, MICHIGAN 48042

UNITED STATES PATENT AND TRADEMARK OFFICE

UNITED STATES DEPARTMENT OF COMMERCE
United States Patent and Trademark Office
Address: COMMISSIONER FOR PATENTS
P.O. Box 1450
Alexandria, Virginia 22313-1450
www.uspto.gov

GIFFORD, KRASS, SPRINKLE,ANDERSON & CITKOWSKI, P.C
PO BOX 7021
TROY, MI 48007-7021

Mail Date: 04/21/2010

Applicant	: Claudia Rushlow	: DECISION ON REQUEST FOR
Patent Number	: 7605114	: RECALCULATION of PATENT
Issue Date	: 10/20/2009	: TERM ADJUSTMENT IN VIEW
Appliction No	: 11/416,728	: OF WYETH AND NOTICE OF INTENT TO
Filed	: 05/03/2006	: ISSUE CERTIFICATE OF CORRECTION
		:

The Request for Recalculation is **GRANTED** to the extent indicated.

The patent term adjustment has been determined to be **781** days. The USPTO will *sua sponte* issue a certificate of correction reflecting the amount of PTA days determined by the recalculation.

Prior to the issuance of the certificate of correction, the USPTO will afford patentee an opportunity to be heard and request reconsideration. Accordingly, patentee has **one month or thirty (30) days**, whichever is longer, to file a request for reconsideration of this patent term adjustment calculation. See 35 U.S.C. 154(b)(3)(B)(ii) and 37 CFR 1.322(a)(4). No extensions of time will be granted under 37 CFR 1.136.

Patentee should use document code PET.OP if electronically filing a request for reconsideration of this patent term adjustment calculation. The patentee must also include the information required by 37 CFR 1.705(b)(2) and the fee required by 37 CFR 1.18(e). If patentee does not file a timely request for reconsideration of this patent term adjustment calculation including the information required by 37 CFR 1.705(b)(2) and the fee required by 37 CFR 1.18(e), the USPTO will issue a certificate of correction reflecting the PTA determination noted above.

Patentee should be aware that in order to preserve the right to review in the United States District Court for the District of Columbia of the USPTO patent term adjustment determination, patentee must ensure that he or she also take the steps required under 35 U.S.C. 154(b)(4)(A) in a timely manner. Nothing in the request for recalculation should be construed as providing an alternative time frame for commencing a civil action under 35 U.S.C. 154(b)(4)(A).

Any questions concerning this decision should be directed to the Office of Patent Legal Administration at 571-272-7702.

UNITED STATES PATENT AND TRADEMARK OFFICE

UNITED STATES DEPARTMENT OF COMMERCE
United States Patent and Trademark Office
Address: COMMISSIONER FOR PATENTS
P.O. Box 1450
Alexandria, Virginia 22313-1450
www.uspto.gov

MCANDREWS HELD & MALLOY, LTD
500 WEST MADISON STREET
SUITE 3400
CHICAGO, IL 60661

Mail Date: 04/21/2010

Applicant	: Roger F. Bernards	: DECISION ON REQUEST FOR
Patent Number	: 7591956	: RECALCULATION of PATENT
Issue Date	: 09/22/2009	: TERM ADJUSTMENT IN VIEW
Appliction No	: 11/416,729	: OF WYETH AND NOTICE OF INTENT TO
Filed	: 05/03/2006	: ISSUE CERTIFICATE OF CORRECTION
		:

The Request for Recalculation is **GRANTED** to the extent indicated.

The patent term adjustment has been determined to be **318** days. The USPTO will *sua sponte* issue a certificate of correction reflecting the amount of PTA days determined by the recalculation.

Prior to the issuance of the certificate of correction, the USPTO will afford patentee an opportunity to be heard and request reconsideration. Accordingly, patentee has **one month or thirty (30) days**, whichever is longer, to file a request for reconsideration of this patent term adjustment calculation. See 35 U.S.C. 154(b)(3)(B)(ii) and 37 CFR 1.322(a)(4). No extensions of time will be granted under 37 CFR 1.136.

Patentee should use document code PET.OP if electronically filing a request for reconsideration of this patent term adjustment calculation. The patentee must also include the information required by 37 CFR 1.705(b)(2) and the fee required by 37 CFR 1.18(e). If patentee does not file a timely request for reconsideration of this patent term adjustment calculation including the information required by 37 CFR 1.705(b)(2) and the fee required by 37 CFR 1.18(e), the USPTO will issue a certificate of correction reflecting the PTA determination noted above.

Patentee should be aware that in order to preserve the right to review in the United States District Court for the District of Columbia of the USPTO patent term adjustment determination, patentee must ensure that he or she also take the steps required under 35 U.S.C. 154(b)(4)(A) in a timely manner. Nothing in the request for recalculation should be construed as providing an alternative time frame for commencing a civil action under 35 U.S.C. 154(b)(4)(A).

Any questions concerning this decision should be directed to the Office of Patent Legal Administration at 571-272-7702.

UNITED STATES PATENT AND TRADEMARK OFFICE

Commissioner for Patents
United States Patent and Trademark Office
P.O. Box 1450
Alexandria, VA 22313-1450
www.uspto.gov

JOHN S. PRATT, ESQ
KILPATRICK STOCKTON, LLP
1100 PEACHTREE STREET
SUITE 2800
ATLANTA, GA 30309

MAILED

APR 21 2009

OFFICE OF PETITIONS

In re Application of	:	
MENZIES JR., John I. et al.	:	
Application No. 11/416,730	:	DECISION ON PETITION
Filed: May 03, 2006	:	TO WITHDRAW
Attorney Docket No. **W2100-321633**	:	FROM RECORD
	:	

This is a decision on the Request to Withdraw as attorney or agent of record under 37 C.F.R. § 1.36(b), filed March 11, 2009.

The request is **NOT APPROVED** because it is moot.

A review of the file record indicates that the power of attorney to John S. Pratt, Esq. has been revoked by the assignee of the patent application on March 24, 2009. Accordingly, the request to withdraw under 37 C.F.R. § 1.36(b) is moot.

All future communications from the Office will continue to be directed to the below-listed address until otherwise notified by applicant.

Telephone inquires concerning this decision should be directed to Michelle R. Eason at 571-272-4231.

Michelle R. Eason
Paralegal Specialist
Office of Petitions

cc: **LAWRENCE A. AARONSON, P.C.**
LAWRENCE A. AARONSON
12850 HIGHWAY 9
SUITE #600 PMB 338
ALPHARETTA GA 30004

UNITED STATES PATENT AND TRADEMARK OFFICE

UNITED STATES DEPARTMENT OF COMMERCE
United States Patent and Trademark Office
Address: COMMISSIONER FOR PATENTS
P.O. Box 1450
Alexandria, Virginia 22313-1450
www.uspto.gov

Lawrence A. Aaronson, P.C.
Lawrence A. Aaronson
12850 Highway 9
Suite #600 PMB 338
Alpharetta, GA 30004

Mail Date: 04/20/2010

Applicant	: John I. Menzies JR.	: DECISION ON REQUEST FOR
Patent Number	: 7605720	: RECALCULATION of PATENT
Issue Date	: 10/20/2009	: TERM ADJUSTMENT IN VIEW
Appliction No	: 11/416,730	: OF WYETH AND NOTICE OF INTENT TO
Filed	: 05/03/2006	: ISSUE CERTIFICATE OF CORRECTION
		:

The Request for Recalculation is **GRANTED** to the extent indicated.

The patent term adjustment has been determined to be **777** days. The USPTO will *sua sponte* issue a certificate of correction reflecting the amount of PTA days determined by the recalculation.

Prior to the issuance of the certificate of correction, the USPTO will afford patentee an opportunity to be heard and request reconsideration. Accordingly, patentee has **one month or thirty (30) days**, whichever is longer, to file a request for reconsideration of this patent term adjustment calculation. See 35 U.S.C. 154(b)(3)(B)(ii) and 37 CFR 1.322(a)(4). No extensions of time will be granted under 37 CFR 1.136.

Patentee should use document code PET.OP if electronically filing a request for reconsideration of this patent term adjustment calculation. The patentee must also include the information required by 37 CFR 1.705(b)(2) and the fee required by 37 CFR 1.18(e). If patentee does not file a timely request for reconsideration of this patent term adjustment calculation including the information required by 37 CFR 1.705(b)(2) and the fee required by 37 CFR 1.18(e), the USPTO will issue a certificate of correction reflecting the PTA determination noted above.

Patentee should be aware that in order to preserve the right to review in the United States District Court for the District of Columbia of the USPTO patent term adjustment determination, patentee must ensure that he or she also take the steps required under 35 U.S.C. 154(b)(4)(A) in a timely manner. Nothing in the request for recalculation should be construed as providing an alternative time frame for commencing a civil action under 35 U.S.C. 154(b)(4)(A).

Any questions concerning this decision should be directed to the Office of Patent Legal Administration at 571-272-7702.

UNITED STATES PATENT AND TRADEMARK OFFICE

UNITED STATES DEPARTMENT OF COMMERCE
United States Patent and Trademark Office
Address: COMMISSIONER FOR PATENTS
P.O. Box 1450
Alexandria, Virginia 22313-1450
www.uspto.gov

PCE INDUSTRY, INC.
ATT. Steven Reiss
288 SOUTH MAYO AVENUE
CITY OF INDUSTRY, CA 91789

Mail Date: 04/21/2010

Applicant	: Tsung-Wei Chiang	: DECISION ON REQUEST FOR
Patent Number	: 7586539	: RECALCULATION of PATENT
Issue Date	: 09/08/2009	: TERM ADJUSTMENT IN VIEW
Appliction No	: 11/416,749	: OF WYETH AND NOTICE OF INTENT TO
Filed	: 05/03/2006	: ISSUE CERTIFICATE OF CORRECTION
		:

The Request for Recalculation is **GRANTED** to the extent indicated.

The patent term adjustment has been determined to be **491** days. The USPTO will *sua sponte* issue a certificate of correction reflecting the amount of PTA days determined by the recalculation.

Prior to the issuance of the certificate of correction, the USPTO will afford patentee an opportunity to be heard and request reconsideration. Accordingly, patentee has **one month or thirty (30) days**, whichever is longer, to file a request for reconsideration of this patent term adjustment calculation. See 35 U.S.C. 154(b)(3)(B)(ii) and 37 CFR 1.322(a)(4). No extensions of time will be granted under 37 CFR 1.136.

Patentee should use document code PET.OP if electronically filing a request for reconsideration of this patent term adjustment calculation. The patentee must also include the information required by 37 CFR 1.705(b)(2) and the fee required by 37 CFR 1.18(e). If patentee does not file a timely request for reconsideration of this patent term adjustment calculation including the information required by 37 CFR 1.705(b)(2) and the fee required by 37 CFR 1.18(e), the USPTO will issue a certificate of correction reflecting the PTA determination noted above.

Patentee should be aware that in order to preserve the right to review in the United States District Court for the District of Columbia of the USPTO patent term adjustment determination, patentee must ensure that he or she also take the steps required under 35 U.S.C. 154(b)(4)(A) in a timely manner. Nothing in the request for recalculation should be construed as providing an alternative time frame for commencing a civil action under 35 U.S.C. 154(b)(4)(A).

Any questions concerning this decision should be directed to the Office of Patent Legal Administration at 571-272-7702.

UNITED STATES PATENT AND TRADEMARK OFFICE

Commissioner for Patents
United States Patent and Trademark Office
P.O. Box 1450
Alexandria, VA 22313-1450
www.uspto.gov

CRAIG W. RODDY
P.O. BOX 1431
DUNCAN, OK 73536-0440

COPY MAILED
SEP 0 5 2006
OFFICE OF PETITIONS

In re Application of	:	
Craig W. Roddy et al	:	
Application No. 11/416,754	:	DECISION ON PETITION
Filed: May 3, 2006	:	TO MAKE SPECIAL UNDER
Attorney Docket No. 2005-IP-017636U1P2	:	37 CFR 1.102(c)(1)
	:	

This is a decision on the petition under 37 CFR 1.102(c)(1), filed May 3, 2006, to make the above-identified application special based on applicant's age as set forth in M.P.E.P. § 708.02, Section IV.

The petition is **GRANTED**.

A grantable petition to make an application special under 37 CFR 1.102(c)(1) and MPEP § 708.02, Section IV: Applicant's Age must be accompanied by evidence showing that at least one of the applicants is 65 years of age, or more, such as a birth certificate or a statement by applicant. No fee is required

The instant petition includes a statement from Inventor Jiten Chatterji stating that he is over 65 years of age. Accordingly, the above-identified application has been accorded "special" status.

Telephone inquiries concerning this decision should be directed to Irvin Dingle at 571-272-3210.

All other inquiries concerning either the examination or status of the application should be directed to the Technology Center.

The application is being forwarded to the Technology Center Art Unit 1755 for action on the merits commensurate with this decision.

Irvin Dingle
Petitions Examiner
Office of Petitions

UNITED STATES PATENT AND TRADEMARK OFFICE

Commissioner for Patents
United States Patent and Trademark Office
P.O. Box 1450
Alexandria, VA 22313-1450
www.uspto.gov

LEFEVOUR LAW GROUP, LLC.
4365 LAWN AVENUE
SUITE 5
WESTERN SPRINGS, IL 60558

COPY MAILED

NOV 1 5 2007

OFFICE OF PETITIONS

In re Application of	:	
Paul Adcock et al.	:	
Application No. 11/416,756	:	DECISION ON PETITION
Filed: May 3, 2006	:	TO WITHDRAW
Attorney Docket No. 060-021US	:	FROM RECORD
	:	

This is a decision on the Request to Withdraw as attorney or agent under 37 C.F.R. § 1.36(b) or 37 C.F.R. § 10.40 filed October 15, 2007.

The request is **APPROVED**.

A grantable request to withdraw as attorney/agent of record must be signed by every attorney/agent seeking to withdraw or contain a clear indication that one attorney is signing on behalf of another/others. A request to withdraw will not be approved unless at least 30 (thirty) days would remain between the date of approval and the later of the expiration date of a time to file a response or the expiration date of the maximum time period which can be extended under 37 C.F.R. § 1.136(a).

The request was signed by Martin LeFevour on behalf of all attorneys/agents associated with customer number 50717. All attorneys/agents associated with customer number 50717 have been withdrawn.

The request to change the correspondence of record is not acceptable as the requested correspondence address is not that of (1) the first named signing inventor; or (2) an intervening assignee of the entire interest under 37 C.F.R. 3.71. Accordingly, all correspondence will be mailed to the assignee. A courtesy copy of this decision will be mailed to the address noted on the request to withdraw. If this firm desires to receive future correspondence regarding this application, the proper power of attorney documents must be submitted.

Applicant is reminded that there is no attorney of record at this time.

There are no outstanding Office actions in this case.

Telephone inquires concerning this decision should be directed to Kimberly Inabinet at 571-272-4618.

Kimberly Inabinet
Petitions Examiner
Office of Petitions

cc: Archipelago Holdings, Inc.
100 South Wacker Drive, Suite 1800
Chicago, IL 60606

cc: Chris Holm
Milbank, Tweed, Hadley & McCloy, LLP
601 S. Figueroa
Litigation/Intellectual Property
Los Angeles, CA 90017

UNITED STATES PATENT AND TRADEMARK OFFICE

UNITED STATES DEPARTMENT OF COMMERCE
United States Patent and Trademark Office
Address: COMMISSIONER FOR PATENTS
P.O. Box 1450
Alexandria, Virginia 22313-1450
www.uspto.gov

APPLICATION NUMBER	FILING OR 371(C) DATE	FIRST NAMED APPLICANT	ATTY. DOCKET NO./TITLE
11/416,756	05/03/2006	Paul D. Adcock	060-021US

CONFIRMATION NO. 9007

POWER OF ATTORNEY NOTICE

50717
LEFEVOUR LAW GROUP, LLC
4365 LAWN AVE
SUITE 5
WESTERN SPRINGS, IL 60558

OC000000026738442

Date Mailed: 11/14/2007

NOTICE REGARDING CHANGE OF POWER OF ATTORNEY

This is in response to the Power of Attorney filed 10/15/2007.

- The withdrawal as attorney in this application has been accepted. Future correspondence will be mailed to the new address of record. 37 CFR 1.33.

/kainabinet/

Office of Initial Patent Examination (571) 272-4000 or 1-800-PTO-9199

UNITED STATES PATENT AND TRADEMARK OFFICE

UNITED STATES DEPARTMENT OF COMMERCE
United States Patent and Trademark Office
Address: COMMISSIONER FOR PATENTS
P.O. Box 1450
Alexandria, Virginia 22313-1450
www.uspto.gov

Beyer Law Group LLP
P.O. BOX 1687
Cupertino, CA 95015-1687

Mail Date: 04/20/2010

Applicant	: James L. Kaschmitter	: DECISION ON REQUEST FOR
Patent Number	: 7648792	: RECALCULATION of PATENT
Issue Date	: 01/19/2010	: TERM ADJUSTMENT IN VIEW
Appliction No	: 11/416,785	: OF WYETH AND NOTICE OF INTENT TO
Filed	: 05/02/2006	: ISSUE CERTIFICATE OF CORRECTION
		:

The Request for Recalculation is **GRANTED** to the extent indicated.

The patent term adjustment has been determined to be **245** days. The USPTO will *sua sponte* issue a certificate of correction reflecting the amount of PTA days determined by the recalculation.

Prior to the issuance of the certificate of correction, the USPTO will afford patentee an opportunity to be heard and request reconsideration. Accordingly, patentee has **one month or thirty (30) days**, whichever is longer, to file a request for reconsideration of this patent term adjustment calculation. See 35 U.S.C. 154(b)(3)(B)(ii) and 37 CFR 1.322(a)(4). No extensions of time will be granted under 37 CFR 1.136.

Patentee should use document code PET.OP if electronically filing a request for reconsideration of this patent term adjustment calculation. The patentee must also include the information required by 37 CFR 1.705(b)(2) and the fee required by 37 CFR 1.18(e). If patentee does not file a timely request for reconsideration of this patent term adjustment calculation including the information required by 37 CFR 1.705(b)(2) and the fee required by 37 CFR 1.18(e), the USPTO will issue a certificate of correction reflecting the PTA determination noted above.

Patentee should be aware that in order to preserve the right to review in the United States District Court for the District of Columbia of the USPTO patent term adjustment determination, patentee must ensure that he or she also take the steps required under 35 U.S.C. 154(b)(4)(A) in a timely manner. Nothing in the request for recalculation should be construed as providing an alternative time frame for commencing a civil action under 35 U.S.C. 154(b)(4)(A).

Any questions concerning this decision should be directed to the Office of Patent Legal Administration at 571-272-7702.

UNITED STATES PATENT AND TRADEMARK OFFICE

UNITED STATES DEPARTMENT OF COMMERCE
United States Patent and Trademark Office
Address: COMMISSIONER FOR PATENTS
P.O. Box 1450
Alexandria, Virginia 22313-1450
www.uspto.gov

Beyer Law Group LLP
P.O. BOX 1687
Cupertino, CA 95015-1687

Mail Date: 05/17/2010

Applicant : James L. Kaschmitter
Patent Number : 7648792
Issue Date : 01/19/2010
Application No : 11/416,785
Filed : 05/02/2006

: NOTICE CONCERNING IMPROPER
: CALCULATION OF PATENT TERM
: ADJUSTMENT BASED UPON USPTO
: IMPROPERLY MEASURING REDUCTION
: PERIOD UNDER 37 CFR 1.704(c)(10).

The United States Patent and Trademark Office (USPTO) discovered that in processing the recent recalculation decisions mailed in response to patentee's filed Request for Recalculation of Patent Term Adjustment in view of Wyeth, the USPTO improperly measured the reduction period for reductions under 37 CFR 1.704(c)(10). Pursuant to 37 CFR 1.704(c)(10), patentee's reduction begins on the date of filing the amendment under 37 CFR 1.312 ("1.312 amendment") or other related paper and ends on the date that the Office mails a response to the filing of the 1.312 amendment or other paper. It has been discovered that during the recalculation, the calculation failed to the limit the reduction to the mail date of the response to the 1.312 amendment or other paper. Accordingly, patentee's reductions were greater than warranted.

This notice **VACATES** the previous GRANTED request for recalculation and provides patentee with a revised GRANTED recalculation.

The patent term adjustment has been determined to be **287** days. The USPTO will *sua sponte* issue a certificate of correction reflecting the amount of patent term adjustment (PTA) days determined by the recalculation.

Prior to the issuance of the certificate of correction, the USPTO will afford patentee an opportunity to be heard and request reconsideration. Accordingly, patentee has **one month or thirty (30) days** from the mail date of this notice, whichever is longer, to file a request for reconsideration of this PTA calculation. See 35 U.S.C. § 154(b)(3)(B)(ii) and 37 CFR 1.322(a)(4).

Patentee should use document code PET.OP if electronically filing a request for reconsideration of this PTA calculation. The patentee must also include the information required by 37 CFR 1.705(b)(2), and the fee required by 37 CFR 1.18(e). If patentee does not file a timely request for reconsideration of this PTA calculation, including the information required by 37 CFR 1.705(b)(2) and the fee required by 37 CFR 1.18(e), the USPTO will issue a certificate of correction reflecting the PTA determination noted above.

Patentee should be aware that in order to preserve the right of review of the USPTO's PTA determination in the United States District Court for the District of Columbia, patentee must ensure that the steps required under 35 U.S.C. § 154 (b)(4) are taken in a timely manner. Nothing in the request for recalculation should be construed as providing an alternative time frame for commencing a civil action under 35 U.S.C. § 154(b)(4).

Issue Classification	Application/Control No.	Applicant(s)/Patent under Reexamination	
	11/416,788	KOPRESKI, MICHAEL S.	
	Examiner	Art Unit	
	FRANK W. LU	1634	

ISSUE CLASSIFICATION

ORIGINAL						CROSS REFERENCE(S)						
CLASS				SUBCLASS	CLASS	SUBCLASS (ONE SUBCLASS PER BLOCK)						
435				91.2	435	6	91.1					
INTERNATIONAL CLASSIFICATION					536	23.1	24.3	24.33	25.3			
C	1	2	P	19/34								
C	1	2	Q	1/68								
C	0	7	H	21/02								
C	0	7	H	21/04								
C	0	7	H	21/00								

(Assistant Examiner) (Date)	/Frank W Lu/ 1/4/2010	Total Claims Allowed: 11
(Legal Instruments Examiner) (Date)	(Primary Examiner) (Date)	O.G. Print Claim(s): 1 / O.G. Print Fig.: None

☐ Claims renumbered in the same order as presented by applicant ☐ CPA ☒ T.D. ☐ R.1.47

Final	Original	Final	Original	Final	Original	Final	Original	Final	Original	Final	Original	Final	Original
1	1		31		61		91		121		151		181
2	2		32		62		92		122		152		182
	~~3~~		33		63		93		123		153		183
3	4		34		64		94		124		154		184
4	5		35		65		95		125		155		185
5	6		36		66		96		126		156		186
	~~7~~		37		67		97		127		157		187
	~~8~~		38		68		98		128		158		188
6	9		39		69		99		129		159		189
9	10		40		70		100		130		160		190
7	11		41		71		101		131		161		191
	~~12~~		42		72		102		132		162		192
10	13		43		73		103		133		163		193
	~~14~~		44		74		104		134		164		194
	~~15~~		45		75		105		135		165		195
	~~16~~		46		76		106		136		166		196
11	17		47		77		107		137		167		197
8	18		48		78		108		138		168		198
	19		49		79		109		139		169		199
	20		50		80		110		140		170		200
	21		51		81		111		141		171		201
	22		52		82		112		142		172		202
	23		53		83		113		143		173		203
	24		54		84		114		144		174		204
	25		55		85		115		145		175		205
	26		56		86		116		146		176		206
	27		57		87		117		147		177		207
	28		58		88		118		148		178		208
	29		59		89		119		149		179		209
	30		60		90		120		150		180		210

UNITED STATES PATENT AND TRADEMARK OFFICE

Commissioner for Patents
United States Patent and Trademark Office
P.O. Box 1450
Alexandria, VA 22313-1450
www.uspto.gov

MCDONNELL BOEHNEN HULBERT & BERGHOFF LLP
300 S. WACKER DRIVE
32ND FLOOR
CHICAGO IL 60606

MAILED

JUN 28 2010

OFFICE OF PETITIONS

In re Application of	:	
Kopreski	:	
Application No. 11/416,788	:	ON APPLICATION FOR
Filed: May 3, 2006	:	PATENT TERM ADJUSTMENT
Atty Docket No. 00-1312-Z1		

This is in response to the "REQUEST FOR RECONSIDERATION OF PATENT TERM ADJUSTMENT UNDER 37 C.F.R. § 1.705(b)" filed March 30, 2010. Applicants submit that the patent term adjustment to be indicated on the patent is three hundred and forty-six (346) days, not one hundred and seventy-six (176) days as calculated by the Office as of the mailing of the initial determination of patent term adjustment. Applicants request this correction solely on the basis that the Office will take in excess of three years to issue this patent.

As the instant application for patent term adjustment requests reconsideration of the patent term adjustment as it relates to the Office's failure to issue the patent within 3 years of the filing date, the application for patent term adjustment under 37 CFR 1.705(b) is **DISMISSED as PREMATURE**.

Knowledge of the actual date the patent issues is required to calculate the amount, if any, of additional patent term patentee is entitled to for Office failure to issue the patent within 3 years. See § 1.702(b). (This is true even where a request for continued examination (RCE) was filed). The computer will not undertake the § 1.702(b) calculation until the actual date of issuance of the patent has been determined. Likewise, the computer will not calculate any further Office delay under § 1.702(a)(4) or applicant delay under § 1.704(c)(10) until the actual date of issuance of the patent has been determined. As such, the Office can not make a determination on the correctness of the patent term adjustment until the patent has issued.

Requesting reconsideration of the patent term adjustment to be indicated on the patent under 37 CFR 1.705(b) based on the initial determination of patent term adjustment and a projected issuance date of the patent (or even the filing date of the request for continued examination) is premature. Accordingly, it is appropriate to dismiss as premature such a request.

Rather than file an application for patent term adjustment under 37 CFR 1.705(b) contesting the 37 CFR 1.702(b) calculation at the time of the mailing of the notice of allowance, applicant is advised that they may wait until the time of the issuance of the patent and file a request for reconsideration of the patent term adjustment pursuant to 37 CFR 1.705(d). As the USPTO does not calculate the amount of time earned pursuant to 37 CFR 1.702(b) until the time of the issuance of the patent, the Office will consider any request for reconsideration of the patent term adjustment due to an error in the calculation of 37 CFR 1.702(b) to be timely if the request for reconsideration is filed within two months of the issuance of the patent. However, as to all other bases for contesting the initial determination of patent term adjustment received with the notice of allowance, applicant must timely file an application for patent term adjustment prior to the payment of the issue fee[1].

It is noted that any period of adjustment will be entered in light of 35 U.S.C. 154(B) GUARANTEE OF NO MORE THAN 3-YEAR APPLICATION PENDENCY, which provides that:

> Subject to the limitations under paragraph (2), if the issue of an original patent is delayed due to the failure of the United States Patent and Trademark Office to issue a patent within 3 years after the actual filing date of the application in the United States, not including —

---

[1] For example, if applicant disputes both the calculation of patent term adjustment under 37 CFR 1.702(a)(1) for Office failure to mail a first Office action or notice of allowance not later than fourteen months after the date on which the application was filed and under 37 CFR 1.702(b) for Office failure to issue a patent within three years of the actual filing date of the application, then applicant must still timely file an application for patent term adjustment prior to the payment of the issue fee to contest the calculation of Office delay in issuing a first Office action or notice of allowance. See 37 CFR 1.705(b) and 35 U.S.C. 154(b)(3)(B). A dispute as to the calculation of the §1.702(a)(1) period raised on request for reconsideration of patent term adjustment under 37 CFR 1.705(d) will be dismissed as untimely filed.

(i) any time consumed by continued examination of the application requested by the applicant under section 132(b);

It is further noted that a Request for Continued Examination (RCE) was filed in this application on October 21, 2009.

Deposit account 13-2490 will be charged $200.00 for the fee set forth in 37 CFR 1.18(e) for consideration of the application for patent term adjustment under 37 CFR 1.705(b).

Any request for reconsideration of the patent term adjustment indicated on the patent must be timely filed within 2 months after issuance pursuant to 37 CFR 1.705(d) and must include payment of the required fee under 37 CFR 1.18(e).

The Office of Data Management has been advised of this decision. This application is being referred to the Office of Data Management for issuance of the patent.

Telephone inquiries specific to this decision should be directed to the undersigned (571) 272-3222.

/Kenya A. McLaughlin/

Kenya A. McLaughlin
Senior Petitions Attorney
Office of Petitions

UNITED STATES PATENT AND TRADEMARK OFFICE

UNITED STATES DEPARTMENT OF COMMERCE
United States Patent and Trademark Office
Address: COMMISSIONER FOR PATENTS
P.O. Box 1450
Alexandria, Virginia 22313-1450
www.uspto.gov

PROSKAUER ROSE LLP
ONE INTERNATIONAL PLACE
BOSTON, MA 02110

Mail Date: 04/21/2010

Applicant	: Alok Srivastava	: DECISION ON REQUEST FOR
Patent Number	: 7648844	: RECALCULATION of PATENT
Issue Date	: 01/19/2010	: TERM ADJUSTMENT IN VIEW
Appliction No	: 11/416,789	: OF WYETH AND NOTICE OF INTENT TO
Filed	: 05/02/2006	: ISSUE CERTIFICATE OF CORRECTION
		:

The Request for Recalculation is **GRANTED** to the extent indicated.

The patent term adjustment has been determined to be **449** days. The USPTO will *sua sponte* issue a certificate of correction reflecting the amount of PTA days determined by the recalculation.

Prior to the issuance of the certificate of correction, the USPTO will afford patentee an opportunity to be heard and request reconsideration. Accordingly, patentee has **one month or thirty (30) days**, whichever is longer, to file a request for reconsideration of this patent term adjustment calculation. See 35 U.S.C. 154(b)(3)(B)(ii) and 37 CFR 1.322(a)(4). No extensions of time will be granted under 37 CFR 1.136.

Patentee should use document code PET.OP if electronically filing a request for reconsideration of this patent term adjustment calculation. The patentee must also include the information required by 37 CFR 1.705(b)(2) and the fee required by 37 CFR 1.18(e). If patentee does not file a timely request for reconsideration of this patent term adjustment calculation including the information required by 37 CFR 1.705(b)(2) and the fee required by 37 CFR 1.18(e), the USPTO will issue a certificate of correction reflecting the PTA determination noted above.

Patentee should be aware that in order to preserve the right to review in the United States District Court for the District of Columbia of the USPTO patent term adjustment determination, patentee must ensure that he or she also take the steps required under 35 U.S.C. 154(b)(4)(A) in a timely manner. Nothing in the request for recalculation should be construed as providing an alternative time frame for commencing a civil action under 35 U.S.C. 154(b)(4)(A).

Any questions concerning this decision should be directed to the Office of Patent Legal Administration at 571-272-7702.

UNITED STATES PATENT AND TRADEMARK OFFICE

Commissioner for Patents
United States Patent and Trademark Office
P.O. Box 1450
Alexandria, VA 22313-1450
www.uspto.gov

SPRINKLE IP LAW GROUP
1301 W, 25TH STREET
SUITE 408
AUSTIN, TX 78705

COPY MAILED

NOV 06 2009

OFFICE OF PETITIONS

In re Application of
George William Hindman
Application No. 11/416,821
Filed: May 3, 2006
Attorney Docket No. KEYS1100-3

DECISION ON PETITION
TO WITHDRAW
FROM RECORD

This is a decision on the Request to Withdraw as attorney or agent of record under 37 CFR. § 1.36(b), filed September 25, 2009.

The request is **NOT APPROVED** as moot.

A review of the file record indicates that the power of attorney to attorneys/agents associated with Customer Number 44654 has been revoked by the assignee of the patent application on September 25, 2009. Accordingly, the request to withdraw under 37 CFR § 1.36(b) is moot.

All future communications from the Office will continue to be directed to the below-listed address until otherwise notified by applicant.

Telephone inquires concerning this decision should be directed to JoAnne Burke at 571-272-4584.

JoAnne Burke
Petitions Examiner
Office of Petitions

cc: George Hindman
P.O. Box 143881
Austin TX 78714

UNITED STATES PATENT AND TRADEMARK OFFICE

UNITED STATES DEPARTMENT OF COMMERCE
United States Patent and Trademark Office
Address: COMMISSIONER FOR PATENTS
P.O. Box 1450
Alexandria, Virginia 22313-1450
www.uspto.gov

SCHWABE, WILLIAMSON & WYATT, P.C.
PACWEST CENTER, SUITE 1900
1211 S.W. FIFTH AVENUE
PORTLAND, OR 97204

Mail Date: 04/21/2010

Applicant	: Randall Don Briggs	: DECISION ON REQUEST FOR
Patent Number	: 7629675	: RECALCULATION of PATENT
Issue Date	: 12/08/2009	: TERM ADJUSTMENT IN VIEW
Appliction No	: 11/416,840	: OF WYETH AND NOTICE OF INTENT TO
Filed	: 05/03/2006	: ISSUE CERTIFICATE OF CORRECTION
		:

The Request for Recalculation is **GRANTED** to the extent indicated.

The patent term adjustment has been determined to be **142** days. The USPTO will *sua sponte* issue a certificate of correction reflecting the amount of PTA days determined by the recalculation.

Prior to the issuance of the certificate of correction, the USPTO will afford patentee an opportunity to be heard and request reconsideration. Accordingly, patentee has **one month or thirty (30) days**, whichever is longer, to file a request for reconsideration of this patent term adjustment calculation. See 35 U.S.C. 154(b)(3)(B)(ii) and 37 CFR 1.322(a)(4). No extensions of time will be granted under 37 CFR 1.136.

Patentee should use document code PET.OP if electronically filing a request for reconsideration of this patent term adjustment calculation. The patentee must also include the information required by 37 CFR 1.705(b)(2) and the fee required by 37 CFR 1.18(e). If patentee does not file a timely request for reconsideration of this patent term adjustment calculation including the information required by 37 CFR 1.705(b)(2) and the fee required by 37 CFR 1.18(e), the USPTO will issue a certificate of correction reflecting the PTA determination noted above.

Patentee should be aware that in order to preserve the right to review in the United States District Court for the District of Columbia of the USPTO patent term adjustment determination, patentee must ensure that he or she also take the steps required under 35 U.S.C. 154(b)(4)(A) in a timely manner. Nothing in the request for recalculation should be construed as providing an alternative time frame for commencing a civil action under 35 U.S.C. 154(b)(4)(A).

Any questions concerning this decision should be directed to the Office of Patent Legal Administration at 571-272-7702.

UNITED STATES PATENT AND TRADEMARK OFFICE

UNITED STATES DEPARTMENT OF COMMERCE
United States Patent and Trademark Office
Address: COMMISSIONER FOR PATENTS
P.O. Box 1450
Alexandria, Virginia 22313-1450
www.uspto.gov

GREENBERG TRAURIG, LLP (SV)
IP DOCKETING
2450 COLORADO AVENUE
SUITE 400E
SANTA MONICA, CA 90404

Mail Date: 04/20/2010

Applicant	: Clifton W. Wood JR.	: DECISION ON REQUEST FOR
Patent Number	: 7639638	: RECALCULATION of PATENT
Issue Date	: 12/29/2009	: TERM ADJUSTMENT IN VIEW
Appliction No	: 11/416,846	: OF WYETH AND NOTICE OF INTENT TO
Filed	: 05/02/2006	: ISSUE CERTIFICATE OF CORRECTION
		:

The Request for Recalculation is **GRANTED** to the extent indicated.

The patent term adjustment has been determined to be **407** days. The USPTO will *sua sponte* issue a certificate of correction reflecting the amount of PTA days determined by the recalculation.

Prior to the issuance of the certificate of correction, the USPTO will afford patentee an opportunity to be heard and request reconsideration. Accordingly, patentee has **one month or thirty (30) days**, whichever is longer, to file a request for reconsideration of this patent term adjustment calculation. See 35 U.S.C. 154(b)(3)(B)(ii) and 37 CFR 1.322(a)(4). No extensions of time will be granted under 37 CFR 1.136.

Patentee should use document code PET.OP if electronically filing a request for reconsideration of this patent term adjustment calculation. The patentee must also include the information required by 37 CFR 1.705(b)(2) and the fee required by 37 CFR 1.18(e). If patentee does not file a timely request for reconsideration of this patent term adjustment calculation including the information required by 37 CFR 1.705(b)(2) and the fee required by 37 CFR 1.18(e), the USPTO will issue a certificate of correction reflecting the PTA determination noted above.

Patentee should be aware that in order to preserve the right to review in the United States District Court for the District of Columbia of the USPTO patent term adjustment determination, patentee must ensure that he or she also take the steps required under 35 U.S.C. 154(b)(4)(A) in a timely manner. Nothing in the request for recalculation should be construed as providing an alternative time frame for commencing a civil action under 35 U.S.C. 154(b)(4)(A).

Any questions concerning this decision should be directed to the Office of Patent Legal Administration at 571-272-7702.

UNITED STATES PATENT AND TRADEMARK OFFICE

UNITED STATES DEPARTMENT OF COMMERCE
United States Patent and Trademark Office
Address: COMMISSIONER FOR PATENTS
P.O. Box 1450
Alexandria, Virginia 22313-1450
www.uspto.gov

JONES DAY
222 EAST 41ST ST
NEW YORK, NY 10017

Mail Date: 04/21/2010

Applicant	: David M. Weiner	: DECISION ON REQUEST FOR
Patent Number	: 7659285	: RECALCULATION of PATENT
Issue Date	: 02/09/2010	: TERM ADJUSTMENT IN VIEW
Appliction No	: 11/416,855	: OF WYETH AND NOTICE OF INTENT TO
Filed	: 05/03/2006	: ISSUE CERTIFICATE OF CORRECTION
		:

The Request for Recalculation is **GRANTED** to the extent indicated.

The patent term adjustment has been determined to be **952** days. The USPTO will *sua sponte* issue a certificate of correction reflecting the amount of PTA days determined by the recalculation.

Prior to the issuance of the certificate of correction, the USPTO will afford patentee an opportunity to be heard and request reconsideration. Accordingly, patentee has **one month or thirty (30) days**, whichever is longer, to file a request for reconsideration of this patent term adjustment calculation. See 35 U.S.C. 154(b)(3)(B)(ii) and 37 CFR 1.322(a)(4). No extensions of time will be granted under 37 CFR 1.136.

Patentee should use document code PET.OP if electronically filing a request for reconsideration of this patent term adjustment calculation. The patentee must also include the information required by 37 CFR 1.705(b)(2) and the fee required by 37 CFR 1.18(e). If patentee does not file a timely request for reconsideration of this patent term adjustment calculation including the information required by 37 CFR 1.705(b)(2) and the fee required by 37 CFR 1.18(e), the USPTO will issue a certificate of correction reflecting the PTA determination noted above.

Patentee should be aware that in order to preserve the right to review in the United States District Court for the District of Columbia of the USPTO patent term adjustment determination, patentee must ensure that he or she also take the steps required under 35 U.S.C. 154(b)(4)(A) in a timely manner. Nothing in the request for recalculation should be construed as providing an alternative time frame for commencing a civil action under 35 U.S.C. 154(b)(4)(A).

Any questions concerning this decision should be directed to the Office of Patent Legal Administration at 571-272-7702.

UNITED STATES PATENT AND TRADEMARK OFFICE

Commissioner for Patents
United States Patent and Trademark Office
P.O. Box 1450
Alexandria, VA 22313-1450
www.uspto.gov

MORRISON & FOERSTER LLP
425 MARKET STREET
SAN FRANCISCO, CA 94105-2482

COPY MAILED

SEP 28 2009

OFFICE OF PETITIONS

In re Application of	:	
Chandrika K. Worrall	:	DECISION ON PETITION
Application No. 11/416,865	:	TO WITHDRAW
Filed: May 2, 2006	:	FROM RECORD
Attorney Docket No. 562492006900	:	

This is a decision on the Request to Withdraw as attorney or agent of record under 37 C.F.R. § 1.36(b), filed September 1, 2009.

The request is **APPROVED**.

A grantable request to withdraw as attorney/agent of record must be signed by every attorney/agent seeking to withdraw or contain a clear indication that one attorney is signing on behalf of another/others. The Office will require the practitioner(s) to certify that he, she or they have: (1) given reasonable notice to the client, prior to the expiration of the reply period, which the practitioner(s) intends to withdraw from employment; (2) delivered to the client or a duly authorized representative of the client all papers and property (including funds) to which the client is entitled; and (3) notified the client of any replies that may be due and the time frame within which the client must respond, pursuant to 37 CFR 10.40 (c).

The request was signed by Robert A. Saltzberg, on behalf of all practitioners of record who are associated with Customer Number 20872.

All attorneys/agents associated with the Customer Number 20872 have been withdrawn. Applicant is reminded that there is no attorney of record at this time.

The correspondence address however, of record remains unchanged.

There is an outstanding Office action mailed June 22, 2009 that requires a reply from the applicant.

Telephone inquires concerning this decision should be directed to the undersigned at (571) 272-6059. All other inquires concerning either the examination or status of the application should be directed to the Technology Center.

Alicia Kelley
Petitions Examiner
Office of Petitions

UNITED STATES PATENT AND TRADEMARK OFFICE

UNITED STATES DEPARTMENT OF COMMERCE
United States Patent and Trademark Office
Address: COMMISSIONER FOR PATENTS
P.O. Box 1450
Alexandria, Virginia 22313-1450
www.uspto.gov

APPLICATION NUMBER	FILING OR 371(C) DATE	FIRST NAMED APPLICANT	ATTY. DOCKET NO./TITLE
11/416,865	05/02/2006	Chandrika K. Worrall	

CONFIRMATION NO. 8530

POWER OF ATTORNEY NOTICE

20872
MORRISON & FOERSTER LLP
425 MARKET STREET
SAN FRANCISCO, CA 94105-2482

OC000000037997135

Date Mailed: 09/28/2009

NOTICE REGARDING CHANGE OF POWER OF ATTORNEY

This is in response to the Power of Attorney filed 09/01/2009.

- The withdrawal as attorney in this application has been accepted. Future correspondence will be mailed to the new address of record. 37 CFR 1.33.

/atkelley/

Office of Data Management, Application Assistance Unit (571) 272-4000, or (571) 272-4200, or 1-888-786-0101

UNITED STATES PATENT AND TRADEMARK OFFICE

UNITED STATES DEPARTMENT OF COMMERCE
United States Patent and Trademark Office
Address: COMMISSIONER FOR PATENTS
P.O. Box 1450
Alexandria, Virginia 22313-1450
www.uspto.gov

APPLICATION NO.	FILING DATE	FIRST NAMED INVENTOR	ATTORNEY DOCKET NO.	CONFIRMATION NO.
11/416,866	05/03/2006	Lingyi A. Zheng	108298717US1	8518

7590 11/09/2007
PERKINS COIE LLP
PATENT-SEA
PO BOX 1247
SEATTLE, WA 98111-1247

EXAMINER
DHINGRA, RAKESH KUMAR

ART UNIT	PAPER NUMBER
1792	

MAIL DATE	DELIVERY MODE
11/09/2007	PAPER

DECISION GRANTING PETITION UNDER 37 CFR 1.138(d)

The declaration of express abandonment is recognized

This is in response to the petition under 37 CFR 1.138(d), requesting for a refund of any previously paid search fee and excess claims fee in the above-identified application.

The petition is granted.

The express abandonment is recognized. Any previously paid search fee and excess claims fee are hereby refunded.

Telephone inquiries should be directed to the Office of Data Management at (571) 272-4200.

Patent Publication Branch
Office of Data Management

02 FC:1111 -500.00 OP

FORM PET651G (Rev. 08/07)

UNITED STATES PATENT AND TRADEMARK OFFICE

UNITED STATES DEPARTMENT OF COMMERCE
United States Patent and Trademark Office
Address: COMMISSIONER FOR PATENTS
P.O. Box 1450
Alexandria, Virginia 22313-1450
www.uspto.gov

APPLICATION NO.	FILING DATE	FIRST NAMED INVENTOR	ATTORNEY DOCKET NO.	CONFIRMATION NO.
11/416,866	05/03/2006	Lingyi A. Zheng	108298717US1	8518

46844 7590 11/13/2007
PERKINS COIE LLP
PATENT-SEA
PO BOX 1247
SEATTLE, WA 98111-1247

EXAMINER
DHINGRA, RAKESH KUMAR

ART UNIT	PAPER NUMBER
1792	

MAIL DATE	DELIVERY MODE
11/13/2007	PAPER

Please find below and/or attached an Office communication concerning this application or proceeding.

The time period for reply, if any, is set in the attached communication.

Notice of Abandonment	Application No.	Applicant(s)	
	11/416,866	ZHENG ET AL.	
	Examiner	Art Unit	
	Dhingra, Rakesh	1792	

-- The MAILING DATE of this communication appears on the cover sheet with the correspondence address--

This application is abandoned in view of:

1. ☐ Applicant's failure to timely file a proper reply to the Office letter mailed on _____.
   (a) ☐ A reply was received on _____ (with a Certificate of Mailing or Transmission dated _____), which is after the expiration of the period for reply (including a total extension of time of _____ month(s)) which expired on _____.
   (b) ☐ A proposed reply was received on _____, but it does not constitute a proper reply under 37 CFR 1.113 (a) to the final rejection.
   (A proper reply under 37 CFR 1.113 to a final rejection consists only of: (1) a timely filed amendment which places the application in condition for allowance; (2) a timely filed Notice of Appeal (with appeal fee); or (3) a timely filed Request for Continued Examination (RCE) in compliance with 37 CFR 1.114).
   (c) ☐ A reply was received on _____ but it does not constitute a proper reply, or a bona fide attempt at a proper reply, to the non-final rejection. See 37 CFR 1.85(a) and 1.111. (See explanation in box 7 below).
   (d) ☐ No reply has been received.

2. ☐ Applicant's failure to timely pay the required issue fee and publication fee, if applicable, within the statutory period of three months from the mailing date of the Notice of Allowance (PTOL-85).
   (a) ☐ The issue fee and publication fee, if applicable, was received on _____ (with a Certificate of Mailing or Transmission dated _____), which is after the expiration of the statutory period for payment of the issue fee (and publication fee) set in the Notice of Allowance (PTOL-85).
   (b) ☐ The submitted fee of $_____ is insufficient. A balance of $_____ is due.
   The issue fee required by 37 CFR 1.18 is $_____. The publication fee, if required by 37 CFR 1.18(d), is $_____.
   (c) ☐ The issue fee and publication fee, if applicable, has not been received.

3. ☐ Applicant's failure to timely file corrected drawings as required by, and within the three-month period set in, the Notice of Allowability (PTO-37).
   (a) ☐ Proposed corrected drawings were received on _____ (with a Certificate of Mailing or Transmission dated _____), which is after the expiration of the period for reply.
   (b) ☐ No corrected drawings have been received.

4. ☑ The letter of express abandonment which is signed by the attorney or agent of record, the assignee of the entire interest, or all of the applicants.

5. ☐ The letter of express abandonment which is signed by an attorney or agent (acting in a representative capacity under 37 CFR 1.34(a)) upon the filing of a continuing application.

6. ☐ The decision by the Board of Patent Appeals and Interference rendered on _____ and because the period for seeking court review of the decision has expired and there are no allowed claims.

7. ☐ The reason(s) below:

Rick Clemons □□Administrative Assistant□□Art Unit: 3900

Petitions to revive under 37 CFR 1.137(a) or (b), or requests to withdraw the holding of abandonment under 37 CFR 1.181, should be promptly filed to minimize any negative effects on patent term.

UNITED STATES PATENT AND TRADEMARK OFFICE

Commissioner for Patents
United States Patent and Trademark Office
P.O. Box 1450
Alexandria, VA 22313-1450
www.uspto.gov

VOLPE AND KOENIG, P.C.
DEPT. ICC
UNITED PLAZA, SUITE 1600
30 SOUTH 17TH STREET
PHILADELPHIA PA 19103

COPY MAILED
MAR 01 2010

In re Application of	:	
Prabhakar R. Chitrapu	:	
Application No. 11/416,873	:	DECISION GRANTING PETITION
Filed: May 3, 2006	:	UNDER 37 CFR 1.313(c)(2)
Attorney Docket No. I-2-0339.2US	:	

This is a decision on the petition under 37 CFR 1.313(c)(2), filed, February 26, 2010 to withdraw the above-identified application from issue after payment of the issue fee.

The petition is **GRANTED**.

The above-identified application is withdrawn from issue for consideration of a submission under 37 CFR 1.114 (request for continued examination). *See* 37 CFR 1.313(c)(2).

Petitioner is advised that the issue fee paid on February 9, 2010 cannot be refunded. If, however, this application is again allowed, petitioner may request that it be applied towards the issue fee required by the new Notice of Allowance.[1]

Telephone inquiries should be directed to Terri Johnson at (571) 272-2991.

This application is being referred to Technology Center AU 2617 for processing of the request for continued examination under 37 CFR 1.114 and for consideration of the concurrently filed amendment and information disclosure statement.

Terri Johnson
Petitions Examiner
Office of Petitions

---

[1] *The request to apply the issue fee to the new Notice may be satisfied by completing and returning the new Part B – Fee(s) Transmittal Form (along with any balance due at the time of submission). Petitioner is advised that the Issue Fee Transmittal Form must be completed and timely submitted to avoid abandonment of the application.*

UNITED STATES PATENT AND TRADEMARK OFFICE

UNITED STATES DEPARTMENT OF COMMERCE
United States Patent and Trademark Office
Address: COMMISSIONER FOR PATENTS
P.O. Box 1450
Alexandria, Virginia 22313-1450
www.uspto.gov

KNOBBE MARTENS OLSON & BEAR LLP
2040 MAIN STREET
FOURTEENTH FLOOR
IRVINE, CA 92614

Mail Date: 05/17/2010

Applicant	: Thomas F. Fangrow JR.	: DECISION ON REQUEST FOR
Patent Number	: 7628774	: RECALCULATION of PATENT
Issue Date	: 12/08/2009	: TERM ADJUSTMENT IN VIEW
Application No	: 11/416,880	: OF WYETH AND NOTICE OF INTENT TO
Filed	: 05/02/2006	: ISSUE CERTIFICATE OF CORRECTION
		:

The Request for Recalculation is **GRANTED** to the extent indicated.

The patent term adjustment has been determined to be **104** days. The USPTO will *sua sponte* issue a certificate of correction reflecting the amount of PTA days determined by the recalculation.

Prior to the issuance of the certificate of correction, the USPTO will afford patentee an opportunity to be heard and request reconsideration. Accordingly, patentee has **one month or thirty (30) days**, whichever is longer, to file a request for reconsideration of this patent term adjustment calculation. See 35 U.S.C. 154(b)(3)(B)(ii) and 37 CFR 1.322(a)(4). No extensions of time will be granted under 37 CFR 1.136.

Patentee should use document code PET.OP if electronically filing a request for reconsideration of this patent term adjustment calculation. The patentee must also include the information required by 37 CFR 1.705(b)(2) and the fee required by 37 CFR 1.18(e). If patentee does not file a timely request for reconsideration of this patent term adjustment calculation including the information required by 37 CFR 1.705(b)(2) and the fee required by 37 CFR 1.18(e), the USPTO will issue a certificate of correction reflecting the PTA determination noted above.

Patentee should be aware that in order to preserve the right to review in the United States District Court for the District of Columbia of the USPTO patent term adjustment determination, patentee must ensure that he or she also take the steps required under 35 U.S.C. 154(b)(4)(A) in a timely manner. Nothing in the request for recalculation should be construed as providing an alternative time frame for commencing a civil action under 35 U.S.C. 154(b)(4)(A).

Any questions concerning this decision should be directed to the Office of Patent Legal Administration at 571-272-7702.

UNITED STATES PATENT AND TRADEMARK OFFICE

UNITED STATES DEPARTMENT OF COMMERCE
United States Patent and Trademark Office
Address: COMMISSIONER FOR PATENTS
P.O. Box 1450
Alexandria, Virginia 22313-1450
www.uspto.gov

LATTICE SEMICONDUCTOR CORPORATION
5555 NE MOORE COURT
HILLSBORO, OR 97124-6421

Mail Date: 04/20/2010

Applicant	: Mose Wahlstrom	: DECISION ON REQUEST FOR
Patent Number	: 7623378	: RECALCULATION of PATENT
Issue Date	: 11/24/2009	: TERM ADJUSTMENT IN VIEW
Appliction No	: 11/416,881	: OF WYETH AND NOTICE OF INTENT TO
Filed	: 05/02/2006	: ISSUE CERTIFICATE OF CORRECTION
		:

The Request for Recalculation is **GRANTED** to the extent indicated.

The patent term adjustment has been determined to be **228** days. The USPTO will *sua sponte* issue a certificate of correction reflecting the amount of PTA days determined by the recalculation.

Prior to the issuance of the certificate of correction, the USPTO will afford patentee an opportunity to be heard and request reconsideration. Accordingly, patentee has **one month or thirty (30) days**, whichever is longer, to file a request for reconsideration of this patent term adjustment calculation. See 35 U.S.C. 154(b)(3)(B)(ii) and 37 CFR 1.322(a)(4). No extensions of time will be granted under 37 CFR 1.136.

Patentee should use document code PET.OP if electronically filing a request for reconsideration of this patent term adjustment calculation. The patentee must also include the information required by 37 CFR 1.705(b)(2) and the fee required by 37 CFR 1.18(e). If patentee does not file a timely request for reconsideration of this patent term adjustment calculation including the information required by 37 CFR 1.705(b)(2) and the fee required by 37 CFR 1.18(e), the USPTO will issue a certificate of correction reflecting the PTA determination noted above.

Patentee should be aware that in order to preserve the right to review in the United States District Court for the District of Columbia of the USPTO patent term adjustment determination, patentee must ensure that he or she also take the steps required under 35 U.S.C. 154(b)(4)(A) in a timely manner. Nothing in the request for recalculation should be construed as providing an alternative time frame for commencing a civil action under 35 U.S.C. 154(b)(4)(A).

Any questions concerning this decision should be directed to the Office of Patent Legal Administration at 571-272-7702.

UNITED STATES PATENT AND TRADEMARK OFFICE

COMMISSIONER FOR PATENTS
UNITED STATES PATENT AND TRADEMARK OFFICE
P.O. BOX 1450
ALEXANDRIA, VA 22313-1450
www.uspto.gov
DIW Aug-06

ROBERT D. FISH
RUTAN & TUCKER LLP
611 ANTON BLVD 14TH FLOOR
COSTA MESA CA 92626-1931

COPY MAILED

AUG 2 4 2006

OFFICE OF PETITIONS

In re Application of	:	
Anthony Gambone	:	DECISION REFUSING STATUS
Application No. 11/416,883	:	UNDER 37 CFR 1.47(b)
Filed: 2 May, 2006	:	
Atty Docket No. 101492.0003US1	:	

This is a decision in response to the petition filed on 2 May, 2006, under 37 CFR 1.47(b).

The petition is **DISMISSED**.

Rule 47 applicant is given TWO MONTHS from the mailing date of this decision to reply, correcting the below-noted deficiencies. Any reply should be entitled "Request for Reconsideration of Petition Under 37 CFR 1.47(b)," and should only address the deficiencies noted below, except that the reply may include an oath or declaration executed by the non-signing inventor. **FAILURE TO RESPOND WILL RESULT IN ABANDONMENT OF THE APPLICATION.** Extensions of time may be obtained in accordance with 37 CFR 1.136(a).

The above-identified design application was filed on 2 May, 2006, without an executed oath or declaration. The present petition was concurrently filed.

Petitioner asserts that emails were sent to the non-signing inventor, and that a copy of an "operations agreement" was sent to the non-signing inventor, but that no response was received.

A grantable petition under 37 CFR 1.47(b) requires:

(1) proof that the non-signing inventor cannot be reached or refuses to sign the oath or declaration after having been presented with the application papers (specification, claims and drawings);
(2) an acceptable oath or declaration in compliance with 35 U.S.C. §§ 115 and 116;
(3) the petition fee;
(4) a statement of the last known address of the non-signing inventor;
(5) proof of proprietary interest, and
(6) proof of irreparable damage.

The petition lacks items (1) and (2).

In regards to item (1), petitioner has not shown that sole inventor Gambone was sent or presented with a copy of the application as filed (specification, including claims, drawings, if any, and the declaration).[1]

Petitioner may show proof that a copy of the application was sent or given to the non-signing inventors for review by providing a copy of the cover letter transmitting the application papers (specification, including claims, drawings, if any, and the declaration) to the non-signing inventors or details given in an affidavit or declaration of facts by a person having first-hand knowledge of the details.

If the application is returned as undeliverable, petitioner should present a copy of the envelope showing that the application sent to the last known address of the non-signing inventors was returned as undeliverable by the post office.

Likewise, before a *bona fide* refusal to sign the declaration can be alleged, petitioner must show that a copy of the application was sent or given to the non-signing inventor. If the inventor refuses in writing, petitioner must submit a copy of that written refusal with any renewed petition. If the refusal was made orally to a person, then that person must provide details of the refusal in an affidavit or declaration of fact.

In regards to item (2), an oath or declaration in compliance with 37 CFR 1.63 must be supplied. The declaration must include the name, citizenship, residence, and mailing address of the non-signing inventor. If the inventor refuses to sign the

---

[1] MPEP 409.03(d).

declaration, the declaration must be signed by an officer of the corporation (chief executive officer, president, vice president, secretary, or treasurer) on behalf of and as agent for the non-signing inventor. The officer must identify his or her title in the declaration. If the declaration is not signed by an officer of the corporation, then proof of the authority of the person signing on behalf of the corporation must be submitted (See MPEP 409.03(b)).

The declaration supplied with the petition is not acceptable because it has not been signed by an officer of the corporation on behalf of the non-signing inventor.

Any renewed petition must be signed as required by 37 CFR 1.33(b).

Further correspondence with respect to this matter should be addressed as follows:

By mail: Mail Stop Petition
Commissioner for Patents
P.O. Box 1450
Alexandria, VA 22313-1450

By FAX: (571) 273-8300
Attn: Office of Petitions

By hand: Customer Service Window
Mail Stop Petition
Randolph Building
401 Dulany Street
Alexandria, VA 22134

Telephone inquiries related to this decision should be directed to the undersigned at (571)272-3231.

D Wood

Douglas I. Wood
Senior Petitions Attorney
Office of Petitions

UNITED STATES PATENT AND TRADEMARK OFFICE

Commissioner for Patents
United States Patent and Trademark Office
P.O. Box 1450
Alexandria, VA 22313-1450
www.uspto.gov
DIW Apr-07

RUTAN & TUCKER, LLP.
HANI Z. SAYED
611 ANTON BLVD
SUITE 1400
COSTA MESA CA 92626

COPY MAILED

APR 0 4 2007

OFFICE OF PETITIONS

In re Application of	:	
Anthony Gambone	:	DECISION ACCORDING STATUS
Application No. 11/416,883	:	UNDER 37 CFR 1.47(b)
Filed: 2 May, 2006	:	
Atty Docket No. 101492.0003US1	:	

This is a decision in response to the renewed petition filed on 19 October, 2006, under 37 CFR 1.47(b).

The petition is **GRANTED**.

Petitioners have shown that the sole inventor, Anthony Gambone, has refused to join in the filing of the above-identified application after having been sent a copy of the application papers. Specifically, petitioner has shown that a copy of the application was sent to the non-signing inventor. The inventor, however, has failed to sign and return the declaration. Additionally, petitioners have shown, via the assignment from the non-signing inventor to PAV Corporation, LLC, and from PAC Corporation, LLC, to China Resource Group, Inc., that petitioner China Resource Group, Inc., has a proprietary interest in the above-identified application. Lastly, petitioner has submitted a declaration in compliance with 37 CFR 1.63, signed by the President of assignee China Resource Group, Inc., Lawrence E. Hecox, on behalf of the non-signing inventor, and has demonstrated that such action is necessary to preserve the rights of the parties.

This application and papers have been reviewed and found in compliance with 37 CFR 1.47(b). This application is hereby accorded Rule 1.47(b) status.

As provided in Rule 1.47(c), this Office will forward notice of this application's filing to the non-signing inventor at the residence address listed on the declaration. Notice of the filing of this application will also be published in the *Official Gazette*.

The application will be referred to the Office of Initial Patent Examination for further processing.

Telephone inquiries related to this decision should be directed to the undersigned at (571)272-3231.

DWood

Douglas I. Wood
Senior Petitions Attorney
Office of Petitions

UNITED STATES PATENT AND TRADEMARK OFFICE

Commissioner for Patents
United States Patent and Trademark Office
P.O. Box 1450
Alexandria, VA 22313-1450
www.uspto.gov
DIW Apr-07

Anthony Gambone
2302 Dexter Avenue
Silver Spring MD 20902

COPY MAILED

APR 0 4 2007

OFFICE OF PETITIONS

In re Application of
Anthony Gambone
Application No. 11/416,883
Filed: 2 May, 2006
For: VENTILATOR SYSTEMS TARGETING SPECIFIC POPULATIONS

Dear Mr. Gambone:

You are named as the sole inventor in the above identified United States patent application, filed under the provisions of 35 U.S.C. 116 (United States Code), and 37 CFR 1.47(b), Rules of Practice in Patent Cases. Should a patent be granted on the application you will be designated therein as the sole inventor.

As the named inventor you are entitled to inspect any paper in the file wrapper of the application, order copies of all or any part thereof (at a prepaid cost per 37 CFR 1.19) or make your position of record in the application. Alternatively, you may arrange to do any of the preceding through a registered patent attorney or agent presenting written authorization from you. If you care to join the application, counsel of record (see below) would presumably assist you. Joining in the application would entail the filing of an appropriate oath or declaration by you pursuant to 37 CFR 1.63.

Telephone inquiries regarding this communication should be directed to the undersigned at 571/272-3231. Requests for information regarding your application should be directed to the File Information Unit at 571-272-3150. Information regarding how to pay for and order a copy of the application, or a specific paper in the application, should be directed to Certification Division at 571-272-3150 or 1-800-972-6382 (outside the Washington D.C. area).

DIWood

Douglas I. Wood
Senior Petitions Attorney
Office of Petitions

RUTAN & TUCKER LLP
HANI Z. SAYED
611 ANTON BLVD
SUITE 1400
COSTA MESA CA 92626-1931

UNITED STATES PATENT
AND TRADEMARK OFFICE

Commissioner for Patents
United States Patent and Trademark Office
P.O. Box 1450
Alexandria, VA 22313-1450
www.uspto.g

Date Mailed :November 27, 2007
Patent No. :7,259,863 B2
Ser. No. :11/416889
Inventor(s) :Ku Ishizuka
Issued :August 21, 2007
Title: GRATING INTERFERENCE TYPE OPTICAL

Re: Request for Certificate of Correction

Consideration has been given your request for the issuance of a certificate of correction for the above-identified patent under the provisions of Rule(s) 1.322 and/or 1.323.

Assignees' names and addresses (assignment data) printed in a patent, are based *solely* on information supplied in the appropriate space for identifying the assignment data, i.e., item 3 of the Issue Fee Transmittal Form PTOL-85B. Granting of a request under 37 CFR 3.81(b) is required to correct applicant's error providing ***incorrect or erroneous*** assignment data, *before* issuance of a Certificate of Correction, under 37 CFR 1.323 *(see Manual of Patent Examining Procedures (M.P.E.P) Chp.1400, sect. 1481).* This procedure is required *at any time after the issue fee is paid*, including after issuance of the patent.

In view of the foregoing, your request is hereby denied.

A request to correct the Assignee under 37 CFR 3.81(b) should include:

A. **the processing fee set forth in 37 CFR 1.117(h) (currently $130);**
B. a statement that the failure to include the correct assignee name on the PTOL-85B was inadvertent; and
C. a copy of the Notice of Recordation of Assignment Document, reflecting the reel and frame number where the assignment(s) is recorded and/or reflecting proof of *the date* the assignment was submitted for recordation.

In the Request, Applicant(s) may request that the file be forwarded to Certificates of Correction Branch, for issuance of a Certificate of Correction, if the Request is granted.

Any request under 37 CFR 3.81(b) should be directed to the following address or facsimile number:

By mail: Mail Stop PETITIONS
Commissioner for Patents
Post Office Box 1450
Alexandria, VA 22313-1450

By hand: Customer Service Window
Mail Stop Petitions
Randolph Building
401 Dulany Street
Alexandria, VA 22314

By fax: (703) 872-9306
ATTN: Office of Petitions

If a fee (currently $100) was previously submitted for consideration of a Request for Certificate of Correction, under CFR 1.323, to correct assignment data, , no additional fee is required.

Magdalene Talley
For Mary F. Diggs, Supervisor
Decisions & Certificates
of Correction Branch
(703) 308-9390 ext. 116

Morgan & Finnegan, LLP
3 World Financial Center
New York, NY 10281-2101

MD/mt

UNITED STATES PATENT AND TRADEMARK OFFICE

Commissioner for Patents
United States Patent and Trademark Office
P.O. Box 1450
Alexandria, VA 22313-1450
www.uspto.gov

Locke Lord Bissell & Liddell, LLP
Attn: IP Docketing
Three World Financial Center
New York, NY 10281-2101

MAILED

OCT 0 1 2009

OFFICE OF PETITIONS

In re Patent No. 7,259,863 :
Issue Date: August 21, 2007 :
Application No. 11/416,889 : ON PETITION
Filed: May 2, 2006 :
Patentee(s): Ko Ishizuka :

This is a decision on the request under 37 CFR 3.81[1], filed December 7, 2007, to correct the assignee data on the front page of the above-identified patent by way of a Certificate of Correction. This is also a decision on the petition under 37 CFR 1.182 to reprint the title page of the Letters patent. The delay in responding is regretted.

Since the present request complies with the requirements of 37 CFR 3.81, the request to correct the assignee data is **GRANTED**.

The Certificates of Correction Branch will be notified of this decision granting the request under 37 CFR 3.81(b) and directing issuance of the requested Certificate of Correction.

The petition under 37 CFR 1.182 is **DISMISSED**.

Petitioner should note that since the correction can be made by way of a Certificate of Correction, the Office will no longer reprint the first page of a Letters patent.

35 U.S.C. 255 states, whenever a mistake of a clerical or typographical nature, or of minor character, which was not the fault of the Patent and Trademark Office, appears in a patent and a showing has been made that such mistake occurred in good faith, the Director may, upon payment of the required fee, issue a certificate of correction, if the correction does not involve such changes in the patent as would constitute new matter or would require reexamination. Such patent, together with the certificate, shall have the same effect and operation in law on the trial of actions for causes thereafter arising as if the same had been originally issued in such corrected form.

[1] *See* MPEP 1309, subsection II; and Official Gazette of June 22, 2004.

In view of the above, the petition under 37 CFR 1.182 is unnecessary and the $400 petition fee submitted on December 7, 2007 will be refunded to petitioner's deposit account.

Additionally, it is noted that on December 7, 2007, petitioner's deposit account was charged a petition fee of $400 for treatment of the request under 37 CFR 3.81. However, a request under 37 CFR 3.81 requires a processing fee of $130. Thus, the overpayment of $270 will also be credited to petitioner's deposit account.

Telephone inquiries concerning this decision may be directed to the undersigned at (571) 272-3226. Inquiries regarding the issuance of a Certificate of Correction should be directed to the Certificates of Correction Branch at (703) 305-8309.

Andrea Smith
Petitions Examiner
Office of Petitions

UNITED STATES PATENT & TRADEMARK OFFICE
Washington, D.C. 20231

REQUEST FOR PATENT FEE REFUND 11/416,889

1 Date of Request: 09/29/09	2 Serial/Patent # 7,259,863

	3 Please refund the following fee(s):	4 PAPER NUMBER	5 DATE FILED	6 AMOUNT
	Filing			$
	Amendment			$
	Extension of Time			$
	Notice of Appeal/Appeal			$
X	Petition	WFEE	12/07/07	$ 400.00
	Issue			$
X	Cert of Correction/Terminal Disc.	WFEE	12/07/07	$ 270.00
	Maintenance			$
	Assignment			$
	Other			$

7 TOTAL AMOUNT OF REFUND $ 670.00

8 TO BE REFUNDED BY:

	Treasury Check
X	Credit Deposit A/C #:

9 1 3 -- 4 5 0 0

10 REASON:

X	Overpayment
	Duplicate Payment
X	No Fee Due (Explanation):

1.182 PETITION UNNECESSARY - OFFICE NO LONGER REPRINTS FIRST PAGE OF LETTERS PATENT.

11 REFUND REQUESTED BY:

TYPED/PRINTED NAME: Andrea M. Smith TITLE: Petitions Examiner

SIGNATURE: /Andrea M. Smith/ PHONE: 2-3226

OFFICE: Office of Petitions

****

THIS SPACE RESERVED FOR FINANCE USE ONLY:

APPROVED: nd DATE: 10/02/09

Instructions for completion of this form appear on the back. After completion, attach white and yellow copies to the official file and mail or hand-carry to:

Office of Finance
Refund Branch
Crystal Park One, Room 802B

FORM PTO 1577
(01/90)

PATENT Docket No. 1232-5248US1

IN THE UNITED STATES PATENT AND TRADEMARK OFFICE

Applicant(s)	:	Ko ISHIZUKA	Conf. No.	:	7307
Serial No.	:	11/416,889	Art Unit	:	2886
US Patent No.	:	7,259,863 B2	Issued	:	August 21, 2007
Filed	:	May 2, 2006	Examiner	:	J. Hansen
For	:	GRATING INTERFERENCE TYPE OPTICAL ENCODER			

PETITION UNDER 37 CFR § 1.182 TO REPRINT THE TITLE PAGE OF US PATENT 7,259,863 B2

Mail Stop - Petitions
Commissioner for Patents
P.O. Box 1450
Alexandria, VA 22313-1450

Sir:

Pursuant to 37 CFR § 1.182, Patentee hereby requests that the Title Page of US Patent 7,259,863 B2 (the '863 Patent) be reprinted due to error on the part of Patentee.

The Commissioner for Patents is hereby authorized to charge the requisite $400.00 petition fee, as required by 37 CFR 1.17(f), or credit any overpayment, to Deposit Account No. 13-4500, Order 1232-5248US1.

A Petition under 37 CFR § 1.183 requesting waiver of the requirements of 37 CFR § 3.81 to add the city of residence of the Assignee, CANON KABUSHIKI KAISHA, to the Title Page of the '863 Patent is being filed contemporaneously with the present Petition under 37 CFR § 1.182. A Request for Certificate of Correction of Patent

10/02/2009 DJEPPA1 00000016 134500 7259863
01 FC:1808 130.00 DA
Adjustment Date: 10/02/2009 LDIEP1
12/10/2007 INTEFSW 00001936 134500 11416889
01 FC:1462 400.00 CR

seeking to add the city of residence of the Assignee via a Certificate of Correction was previously filed on November 12, 2007.

DISCUSSION

Assignee CANON KABUSHIKI KAISHA resides in the city and foreign country of Tokyo, Japan. The city of Tokyo, however, was erroneously not included of the Title Page of the '863 Patent, under INID Code "(75) Assignee:". As discussed in the Petition under 37 CFR § 1.183, the omission of "Tokyo" on the Title Page of the '863 Patent occurred because "Tokyo" was inadvertently not identified under Item 3, "ASSIGNEE NAME AND RESIDENCE DATA TO BE PRINTED ON THE PATENT", sub-item "(B) RESIDENCE: (CITY and STATE OR COUNTRY)" on the PART B – FEE(S) TRANSMITTAL of the PTOL-85 filed with the payment of the issue fee on December 22, 2003. Only "JAPAN" was identified under Item 3(B) of the PTOL-85, as opposed to -- TOKYO, JAPAN --.

Upon granting the contemporaneously filed Petition under 37 CFR § 1.183, Patentee requests that the Commissioner for Patents reprint the Title Page of the '863 Patent to include:

"(73) Assignee: Canon Kabushiki Kaisha, Tokyo (JP)".

AUTHORIZATION

The Commissioner for patents is hereby authorized to charge any additional fees which may be required for the timely consideration of this Petition, or credit any overpayment, to Deposit Account No. 13-4500, Order 1232-5248US1.

Respectfully submitted,
MORGAN & FINNEGAN, L.L.P.

Date: December 7, 2007 By:

Brian W. Brown
Registration No.: 47,265
(202) 857-7887 Telephone
(202) 857-7929 Facsimile

Correspondence Address
Morgan & Finnegan, L.L.P.
3 World Financial Center
New York, NY 10281-2101

RAM Fee History Query

Revenue Accounting and Management

Name/Number: 11416889 Total Records Found: 12

Start Date: Any Date End Date: Any Date

Accounting Date	Sequence Num.	Fee Type	Fee Code	Fee Amount	Mailroom Date	Payment Method
10/02/2009	00000028	4	1462	-$400.00	12/07/2007	DA 134500
12/10/2007	00003379	4	1462	$400.00	12/07/2007	DA 134500
12/10/2007	00003305	4	1462	$400.00	12/07/2007	DA 134500
11/13/2007	00010934	4	1811	$100.00	11/12/2007	DA 134500
07/16/2007	00010957	4	1501	$1,400.00	07/16/2007	DA 134500
07/16/2007	00010959	4	8001	$9.00	07/16/2007	DA 134500
07/16/2007	00010958	4	1504	$300.00	07/16/2007	DA 134500
06/06/2007	00009648	4	1814	$130.00	06/06/2007	DA 134500
02/08/2007	00002163	4	1253	$1,020.00	02/07/2007	DA 134500
05/05/2006	00000177	1	1111	$500.00	05/02/2006	DA 134500
05/05/2006	00000176	1	1011	$300.00	05/02/2006	DA 134500
05/05/2006	00000178	1	1311	$200.00	05/02/2006	DA 134500

```
Adjustment date: 10/02/2009  LDIEP1
12/10/2007 INTEFSW  00001900 134500   11416889
01 FC:1462        400.00 CR
```

```
10/02/2009 LDIEP1   00000015 134500 7259863
Sale Ref: 00000016 DA#: 134500   7259863
01 FC:1808        130.00 DA
```

UNITED STATES PATENT AND TRADEMARK OFFICE

Commissioner for Patents
United States Patent and Trademark Office
P.O. Box 1450
Alexandria, VA 22313-1450
www.uspto.gov

Lefevour Law Group, LLC
4365 Lawn Avenue
Suite 5
Western Springs, IL 60558

COPY MAILED

FEB 20 2008

OFFICE OF PETITIONS

In re Application of	:	
Paul D. Adcock et al.	:	
Application No. 11/416,913	:	DECISION ON PETITION
Filed: May 3, 2006	:	TO WITHDRAW
Attorney Docket No. 09163-2660, (060-020)	:	FROM RECORD
	:	

This is a decision on the Request to Withdraw as attorney or agent of record under 37 C.F.R. § 1.36(b), filed October 15, 2007.

The request is **NOT APPROVED** as moot.

A review of the file record indicates that the power of attorney to Lefevour Law Group, LLC has been revoked by the assignee of the patent application on January 10, 2008. Accordingly, the request to withdraw under 37 C.F.R. § 1.36(b) is moot.

All future communications from the Office will continue to be directed to the below-listed address until otherwise notified by applicant.

Telephone inquires concerning this decision should be directed to Terri Williams at 571-272-2991.

T. Williams

Terri Williams
Petitions Examiner
Office of Petitions

cc: **Milbank, Tweed, Hadley & McCloy**
1 Chase Manhattan Plaza
New York, NY 10005-1413

UNITED STATES PATENT AND TRADEMARK OFFICE

Commissioner for Patents
United States Patent and Trademark Office
P.O. Box 1450
Alexandria, VA 22313-1450
www.uspto.gov

DAVIS, BROWN, KOEHN, SHORS & ROBERTS, PC
THE DAVIS BROWN TOWER
215 10TH STREET SUITE 1300
DES MOINES, IA 50309

COPY MAILED

APR 06 2009

OFFICE OF PETITIONS

In re Application of	:	
Werner Gellerman, et al.	:	
Application No. 11/416,915	:	DECISION ON PETITION
Filed: May 3, 2006	:	UNDER 37 CFR 1.313(c)(1)
Attorney Docket No. 50818-01050	:	

This is a decision on the petition under 37 CFR 1.313(c), filed April 2, 2009, to withdraw the above-identified application from issue after payment of the issue fee.

The petition is **DISMISSED**.

37 CFR 1.313(c) provides that:

Once the issue fee has been paid, the application will not be withdrawn from issue upon petition by the applicant for any reason except:

(1) Unpatentability of one of more claims, which petition must be accompanied by an unequivocal statement that one or more claims are unpatentable, an amendment to such claim or claims, and an explanation as to how the amendment causes such claim or claims to be patentable;

(2) Consideration of a request for continued examination in compliance with 37 CFR 1.114; or

(3) Express abandonment of the application. Such express abandonment may be in favor of a continuing application.

Upon payment of the issue fee, an application will not be withdrawn from issue upon petition except for the reasons enumerated in 37 CFR 1.313(c). The circumstances of the above-identified application do not fall within any of those exceptions.

For the reason stated above, the petition under 37 CFR 1.313(c) cannot be granted.

Petitioner is reminded that the filing of any renewed petition to withdraw from issue may not be recognized or effective if not received by the appropriate deciding official in time to act prior to

issuance. *Note* 37 CFR 1.313(d). It is recommended that the facsimile number listed below be used to file the renewed petition.

Further correspondence with respect to this matter should be addressed as follows:

By mail: Mail Stop PETITIONS
Commissioner for Patents
Post Office Box 1450
Alexandria, VA 22313-1450

By hand: Customer Service Window
Mail Stop Petitions
Randolph Building
401 Dulany Street
Alexandria, VA 22314

By fax: **(571) 273-0025**
Office of Petitions

Any questions concerning this decision may be directed to undersigned at (571) 272-1642. All other inquiries concerning this application should be directed to the Office of Data Management at 571-272-4000.

/AMW/
April M. Wise
Petitions Examiner
Office of Petitions

UNITED STATES PATENT AND TRADEMARK OFFICE

Commissioner for Patents
United States Patent and Trademark Office
P.O. Box 1450
Alexandria, VA 22313-1450
www.uspto.gov

DAVIS, BROWN, KOEHN, SHORS & ROBERTS, PC
THE DAVIS BROWN TOWER
215 10TH STREET
SUITE 1300
DES MOINES, IA 50309

MAILED

APR 16 2009

OFFICE OF PETITIONS

In re Application of	:	
Werner Gellerman, et al.	:	
Application No. 11/416,915	:	DECISION GRANTING PETITION
Filed: May 3, 2006	:	UNDER 37 CFR 1.313(c)(3)
Attorney Docket No. 50818-01050	:	

This is a decision on the renewed petition under 37 CFR 1.313(c)(3), filed April 14, 2009 and supplement filed April 15, 2009, to withdraw the above-identified application from issue after payment of the issue fee.

The petition is **GRANTED**.

Petitioner requests that the above-identified application be withdrawn from issue for express abandonment in favor of a continuing application under 37 CFR 1.53(b) filed April 15, 2009.

The application is hereby withdrawn from issue, and the abandonment is hereby recognized.

A review of the record shows that an improper Request for Continued Application was filed on April 2, 2009 and April 14 2009. Since the requests are considered improper and will not be considered, the $810 filing fee paid is being refunded to petitioner's credit card. Further, as it is noted that the Petition to withdraw from issue fee was submitted in duplicate, the $130 overpaid will also be refunded to the petitioner's credit card.

Telephone inquiries regarding this decision should be directed to undersigned at (571) 272-1642. All other inquiries concerning this application should be directed to the Office of Data Management at their hotline at 571-272-4000.

/AMW/
April M. Wise
Petitions Examiner
Office of Petitions

SPE RESPONSE FOR CERTIFICATE OF CORRECTION

Paper No.: _____

DATE : 7/14/10

TO SPE OF : ART UNIT 3748 (3700)

SUBJECT : Request for Certificate of Correction for Appl. No.: 11/416,932 Patent No.: 7,497,849

Please respond to this request for a certificate of correction within 7 days.

FOR IFW FILES:

Please review the requested changes/corrections as shown in the **COCIN** document(s) in the IFW application image. No new matter should be introduced, nor should the scope or meaning of the claims be changed.

Please complete the response (see below) and forward the completed response to scanning using document code **COCX**.

FOR PAPER FILES:

Please review the requested changes/corrections as shown in the attached certificate of correction. Please complete this form (see below) and forward it with the file to:

Certificates of Correction Branch (CofC)
Randolph Square – 9D10-A
Palm Location 7580

Ernest C. White, LTE
Randolph Sq. Ste 9D62A
703-756-1590

Thank You For Your Assistance

The request for issuing the above-identified correction(s) is hereby:
Note your decision on the appropriate box.

X Approved	**All** changes apply.
☐ **Approved in Part**	Specify below which changes **do not** apply.
☐ **Denied**	State the reasons for denial below.

_____

_____

_____

SPE /THOMAS E. DENION/
ART UNIT 3748

SPE RESPONSE FOR CERTIFICATE OF CORRECTION

Paper No.: _____

DATE : 7/14/10

TO SPE OF : ART UNIT 3748 (3700)

SUBJECT : Request for Certificate of Correction for Appl. No.: 11/416,932 Patent No.: 7,497,849

Please respond to this request for a certificate of correction within 7 days.

FOR IFW FILES:

Please review the requested changes/corrections as shown in the **COCIN** document(s) in the IFW application image. No new matter should be introduced, nor should the scope or meaning of the claims be changed.

Please complete the response (see below) and forward the completed response to scanning using document code **COCX**.

FOR PAPER FILES:

Please review the requested changes/corrections as shown in the attached certificate of correction. Please complete this form (see below) and forward it with the file to:

Certificates of Correction Branch (CofC)
Randolph Square – 9D10-A
Palm Location 7580

Ernest C. White, LTE
Randolph Sq. Ste 9D62A
703-756-1590

Thank You For Your Assistance

The request for issuing the above-identified correction(s) is hereby:
Note your decision on the appropriate box.

X Approved	**All** changes apply.
☐ **Approved in Part**	Specify below which changes **do not** apply.
☐ **Denied**	State the reasons for denial below.

_____

_____

_____

SPE /THOMAS E. DENION/
ART UNIT 3748

UNITED STATES PATENT AND TRADEMARK OFFICE

UNITED STATES DEPARTMENT OF COMMERCE
United States Patent and Trademark Office
Address: COMMISSIONER FOR PATENTS
P.O. Box 1450
Alexandria, Virginia 22313-1450
www.uspto.gov

FRISHAUF, HOLTZ, GOODMAN & CHICK, PC
220 Fifth Avenue
16TH Floor
NEW YORK, NY 10001-7708

Mail Date: 04/21/2010

Applicant	: Takeyuki Ajito	: DECISION ON REQUEST FOR
Patent Number	: 7612822	: RECALCULATION of PATENT
Issue Date	: 11/03/2009	: TERM ADJUSTMENT IN VIEW
Appliction No	: 11/416,939	: OF WYETH AND NOTICE OF INTENT TO
Filed	: 05/03/2006	: ISSUE CERTIFICATE OF CORRECTION
		:

The Request for Recalculation is **GRANTED** to the extent indicated.

The patent term adjustment has been determined to be **619** days. The USPTO will *sua sponte* issue a certificate of correction reflecting the amount of PTA days determined by the recalculation.

Prior to the issuance of the certificate of correction, the USPTO will afford patentee an opportunity to be heard and request reconsideration. Accordingly, patentee has **one month or thirty (30) days**, whichever is longer, to file a request for reconsideration of this patent term adjustment calculation. See 35 U.S.C. 154(b)(3)(B)(ii) and 37 CFR 1.322(a)(4). No extensions of time will be granted under 37 CFR 1.136.

Patentee should use document code PET.OP if electronically filing a request for reconsideration of this patent term adjustment calculation. The patentee must also include the information required by 37 CFR 1.705(b)(2) and the fee required by 37 CFR 1.18(e). If patentee does not file a timely request for reconsideration of this patent term adjustment calculation including the information required by 37 CFR 1.705(b)(2) and the fee required by 37 CFR 1.18(e), the USPTO will issue a certificate of correction reflecting the PTA determination noted above.

Patentee should be aware that in order to preserve the right to review in the United States District Court for the District of Columbia of the USPTO patent term adjustment determination, patentee must ensure that he or she also take the steps required under 35 U.S.C. 154(b)(4)(A) in a timely manner. Nothing in the request for recalculation should be construed as providing an alternative time frame for commencing a civil action under 35 U.S.C. 154(b)(4)(A).

Any questions concerning this decision should be directed to the Office of Patent Legal Administration at 571-272-7702.

UNITED STATES PATENT AND TRADEMARK OFFICE

Commissioner for Patents
United States Patent and Trademark Office
P.O. Box 1450
Alexandria, VA 22313-1450
www.uspto.gov

Lefevour Law Group, LLC
4365 Lawn Avenue
Suite 5
Western Springs, IL 60558

COPY MAILED

FEB 2 0 2008

OFFICE OF PETITIONS

In re Application of	:	
Paul D. Adcock et al.	:	
Application No. 11/416,942	:	DECISION ON PETITION
Filed: May 3, 2006	:	TO WITHDRAW
Attorney Docket No. 09163-26400, (060-018)	:	FROM RECORD
	:	

This is a decision on the Request to Withdraw as attorney or agent of record under 37 C.F.R. § 1.36(b), filed October 15, 2007.

The request is **NOT APPROVED** as moot.

A review of the file record indicates that the power of attorney to Lefevour Law Group, LLC has been revoked by the assignee of the patent application on January 23, 2008. Accordingly, the request to withdraw under 37 C.F.R. § 1.36(b) is moot.

All future communications from the Office will continue to be directed to the below-listed address until otherwise notified by applicant.

Telephone inquires concerning this decision should be directed to Terri Williams at 571-272-2991.

T. Williams

Terri Williams
Petitions Examiner
Office of Petitions

cc: **Milbank, Tweed, Hadley & McCloy**
1 Chase Manhattan Plaza
New York, NY 10005-1413

UNITED STATES PATENT AND TRADEMARK OFFICE

COMMISSIONER FOR PATENTS
UNITED STATES PATENT AND TRADEMARK OFFICE
P.O. BOX 1450
ALEXANDRIA, VA 22313-1450
www.uspto.gov

MILBANK, TWEED, HADLEY &
MCCLOY
1 CHASE MANHATTAN PLAZA
NEW YORK NY 10005-1413

MAILED

JUL 13 2010

OFFICE OF PETITIONS

In re Application :
Adcock, et al. :
Application No. 11/416,942 : PATENT TERM ADJUSTMENT
Filed: May 3, 2006 :
Dkt. No.: 09163-26400, (060-018) :

This is in response to the "PETITION FOR EXTENSION OF APTENT TERM 37 C.F.R. § 1.705(b)," filed March 5, 2010. This matter is being properly treated under 37 CFR 1.705(b).

Applicant submits that the correct patent term adjustment to be indicated on the patent is 453 days, not 303 days as calculated by the Office as of the mailing of the initial determination of patent term adjustment. Applicant requests this correction on the basis that the Office will take in excess of three years to issue this patent.

Insofar as the instant application for patent term adjustment requests reconsideration of the patent term adjustment as it relates to the Office's failure to issue the patent within 3 years of the filing date, the application for patent term adjustment under 37 CFR 1.705(b) is DISMISSED as PREMATURE.

Knowledge of the actual date the patent issues is required to calculate the amount, if any, of additional patent term patentee is entitled to for Office failure to issue the patent within 3 years. See, § 1.702(b). (This is true even where a request for continued examination (RCE) was filed). The computer will not undertake the § 1.702(b) calculation until the actual date of issuance of the patent has been determined. Likewise, the computer will not calculate any further Office delay under § 1.702(a)(4) or applicant delay under § 1.704(c)(10) until the actual date of issuance of the patent has been determined. As such, the Office can not make a determination on the correctness of the patent term adjustment until the patent has issued.

Requesting reconsideration of the patent term adjustment to be indicated on the patent based on the initial determination of patent term adjustment and a projected issuance date of the patent (or even the filing date of the request for continued examination) is premature. Accordingly, it is appropriate to dismiss as premature such a request.

Applicant is advised that they may wait until the time of the issuance of the patent and file a request for reconsideration of the patent term adjustment pursuant to 37 CFR 1.705(d). As the USPTO does not calculate the amount of time earned pursuant to 37 CFR 1.702(b) until the time

of the issuance of the patent, the Office will consider any request for reconsideration of the patent term adjustment due to an error in the calculation of 37 CFR 1.702(b) to be timely if the request for reconsideration is filed within two months of the issuance of the patent. However, as to all other bases for contesting the initial determination of patent term adjustment received with the notice of allowance, applicant must timely file an application for patent term adjustment prior to the payment of the issue fee[1].

The required $200.00 application for patent term adjustment application fee under 37 CFR 1.705(b) has been charged to the authorized deposit account. See, 37 CFR 1.18(e). As submission of the application fee is required for reconsideration of the patent term adjustment, the application fee is not subject to refund.

However, any request for reconsideration of the patent term adjustment indicated on the patent must be timely filed within 2 months after issuance pursuant to 37 CFR 1.705(d) and **must** include payment of the required fee under 37 CFR 1.18(e).

The application file is being forwarded to the Office of Data Management for issuance of the patent. The patent term adjustment indicated on the patent (as shown on the Issue Notification mailed about three weeks prior to patent issuance) will include any additional adjustment accrued both for Office delay in issuing the patent more than four months after payment of the issue fee and satisfaction of all outstanding requirements, and for the Office taking in excess of three years to issue the patent (to the extent that the three-year period does not overlap with periods already accorded).

Telephone inquiries specific to this decision should be directed to the undersigned at (571) 272-3205.

/ALESIA M. BROWN/

Alesia M. Brown
Petitions Attorney
Office of Petitions

---

[1] For example, if applicant disputes both the calculation of patent term adjustment under 37 CFR 1.702(a)(1) for Office failure to mail a first Office action or notice of allowance not later than fourteen months after the date on which the application was filed and under 37 CFR 1.702(b) for Office failure to issue a patent within three years of the actual filing date of the application, then applicant must still timely file an application for patent term adjustment prior to the payment of the issue fee to contest the calculation of Office delay in issuing a first Office action or notice of allowance. See 37 CFR 1.705(b) and 35 U.S.C. 154(b)(3)(B). A dispute as to the calculation of the §1.702(a)(1) period raised on request for reconsideration of patent term adjustment under 37 CFR 1.705(d) will be dismissed as untimely filed.

UNITED STATES PATENT AND TRADEMARK OFFICE

Commissioner for Patents
United States Patent and Trademark Office
P.O. Box 1450
Alexandria, VA 22313-1450
www.uspto.gov

Lefevour Law Group, LLC
4365 Lawn Avenue
Suite 5
Western Springs, IL 60558

COPY MAILED

MAR 17 2008

OFFICE OF PETITIONS

In re Application of	:	
Paul D. Adcock et al.	:	
Application No. 11/416,943	:	DECISION ON PETITION
Filed: May 3, 2006	:	TO WITHDRAW
Attorney Docket No. 09163-26800, (060-022)	:	FROM RECORD

This is a decision on the Request to Withdraw as attorney or agent of record under 37 C.F.R. § 1.36(b), filed October 15, 2007.

The request is **NOT APPROVED** as moot.

A review of the file record indicates that the power of attorney to Lefevour Law Group, LLC has been revoked by the assignee of the patent application on January 24, 2008. Accordingly, the request to withdraw under 37 C.F.R. § 1.36(b) is moot.

All future communications from the Office will continue to be directed to the below-listed address until otherwise notified by applicant.

Telephone inquires concerning this decision should be directed to Terri Williams at 571-272-2991.

T. Williams

Terri Williams
Petitions Examiner
Office of Petitions

cc: **Milbank, Tweed, Hadley & McCloy**
1 Chase Manhattan Plaza
New York, NY 10005-1413

UNITED STATES PATENT AND TRADEMARK OFFICE

Commissioner for Patent
United States Patent and Trademark Office
P.O. Box 145
Alexandria, VA 22313-145
www.uspto.go

MAILED
FROM DIRECTORS OFFICE

MAR 14 2007

TECHNOLOGY CENTER 3600

KING & SPALDING LLP
1180 PEACHTREE STREET
ATLANTA, GA 30309-3521

In re application of
Robert Anthony Love et al.
Application No. 11/416,946
Filed: May 03, 2006
For: APPROVING ACH OPERATOR PROCESSING OF ACH PAYMENTS BASED ON AN ORIGINATING DEPOSITORY FINANCIAL INSTITUTION'S APPROVED ORIGINATOR LIST

DECISION ON PETITION TO MAKE SPECIAL (ACCELERATED EXAMINATION)

This is in response to the petition filed on August 28, 2006 (with Certificate of Mailing date of August 24, 2006) to make the above-identified application special on the basis of special examining procedure for certain new applications - accelerated examination as set forth in MPEP § 708.02 VIII.

The requirements for granting special status under this section are: (A) a petition to make special accompanied by the fee set forth in 37 CFR 1.17(i); (B) all claims being directed to a single invention, or an election without traverse if the Office determines that all the claims are no directed to a single invention; (C) a statement that a pre-examination search was made listing the field of search; (D) one copy of each of the references deemed most closely related to the subject matter encompassed by the claims if said references are not already of record; and (E) a detailed discussion of how the claimed subject matter is patentable over the references in accordance with 37 CFR 1.111 (b) and (c).

Since all of the requirements for special status under MPEP § 708.02 VIII have been met, the petition is **GRANTED**.

The examiner is directed (1) to make an interference search for possible interfering applications, (2) to promptly examine this application out of turn, and (3) if any interfering application is discovered, to examine such application simultaneously and state in the first official letter of such application that it is being taken out of turn because of a possible interference.

Petitioner is advised that this application will continue to be special, throughout its entire prosecution and pendency, including interference or appeal, if any, only if petitioner makes a prompt ***bona fide*** effort, in response to each Office action, to place the application in condition for allowance, even if it is necessary to conduct an interview with the examiner to accomplish this purpose.

SUMMARY: Petition to Make Special **GRANTED.**

Randolph A. Reese

Randolph A. Reese
Quality Assurance Specialist
Technology Center 3600
571-272-6619

RAR/dew: 01/12/07

UNITED STATES PATENT AND TRADEMARK OFFICE

Commissioner for Patents
United States Patent and Trademark Office
P.O. Box 1450
Alexandria, VA 22313-1450
www.uspto.gov

AIRMAN INC
930 HARRIS AVE SE
SALEM OR 97302

MAILED

APR 28 2010

OFFICE OF PETITIONS

In re Application of	:	
Robert R. Henderson, II	:	
Application No. 11/416,954	:	DECISION ON PETITION
Filed: May 2, 2006	:	
Attorney Docket No. 1304-2	:	

This is a decision on the petition under the unintentional provisions of 37 CFR 1.137(b), filed March 12, 2010, to revive the above-identified application.

The petition is **GRANTED**.

The application became abandoned for failure to reply in a proper and timely manner to the non-final Office action mailed April 28, 2009, which set a shortened statutory period for reply of three (3) months. No extensions of time under the provisions of 37 CFR 1.136(a) were obtained. Accordingly, the application became abandoned on July 29, 2009. A Notice of Abandonment was mailed March 4, 2010.

The petition satisfies the requirements of 37 CFR 1.137(b) in that petitioner has supplied (1) the reply in the form of an Amendment (previously submitted January 19, 2010), (2) the petition fee of $810.00, and (3) an adequate statement of unintentional delay.

Telephone inquiries concerning this decision should be directed to the undersigned at (571) 272-7751.

This application is being referred to Technology Center AU 3749 for appropriate action by the Examiner in the normal course of business on the reply received.

Joan Olszewski

Joan Olszewski
Petitions Examiner
Office of Petitions

UNITED STATES PATENT AND TRADEMARK OFFICE

Commissioner for Patents
United States Patent and Trademark Office
P.O. Box 1450
Alexandria, VA 22313-1450
www.uspto.gov

Absolute Technology Law Group, LLC
135 W. Wells Street
Suite 518
Milwaukee, WI 53203

COPY MAILED
SEP 15 2008

In re Application of	:	
Richard Prince, Jr. et al.	:	
Application No. 11/416,964	:	DECISION ON PETITION
Filed: May 3, 2006	:	
Attorney Docket No. PRINCE _ NP_05_05	:	

This is a decision on the petition under 37 CFR 1.137(b), filed June 13, 2008, to revive the above-identified application.

The petition is **GRANTED**.

This application became abandoned for failure to timely submit corrected drawings as required by the Notice of Allowability, mailed January 17, 2008. Accordingly, the date of abandonment of this application is April 18, 2008. A Notice of Abandonment was mailed on May 15, 2008.

The petition satisfies the requirements of 37 CFR 1.137(b) in that petitioner has supplied (1) the reply in the form of corrected drawings, (2) the petition fee of $770, and (3) a proper statement of unintentional delay. Accordingly, the drawing corrections are accepted as being unintentionally delayed.

Telephone inquiries concerning this decision should be directed to Kimberly Inabinet at (571) 272-4618.

This application is being referred to the Office of Data Management for further processing into a patent.

Carl Friedman
Petitions Examiner
Office of Petitions

UNITED STATES PATENT AND TRADEMARK OFFICE

Commissioner for Patents
United States Patent and Trademark Office
P.O. Box 1450
Alexandria, VA 22313-1450
www.uspto.gov

BUSKOP LAW GROUP, P.C.
1776 YORKTOWN
SUITE 550
HOUSTON TX 77056

COPY MAILED

AUG 2 1 2006

OFFICE OF PETITIONS

In re Application of	:	
Tandy, et al.	:	
Application No. 11/416,971	:	DECISION ON PETITION
Filed: May 3, 2006	:	TO MAKE SPECIAL UNDER
Attorney Docket No. 1419.002	:	37 CFR 1.102(c)(1)
	:	

This is a decision on the petition under 37 CFR 1.102(c)(1), filed May 3, 2006, to make the above-identified application special based on applicant's age as set forth in M.P.E.P. § 708.02, Section IV.

The petition is **GRANTED**.

A grantable petition to make an application special under 37 CFR 1.102(c)(1) and MPEP § 708.02, Section IV: Applicant's Age, must be accompanied by evidence showing that at least one of the applicants is 65 years of age, or more, such as a birth certificate or a statement by applicant. No fee is required.

The instant petition includes copy of state drivers license. Accordingly, the above-identified application has been accorded "special" status.

Telephone inquiries concerning this decision should be directed to April Wise at 571-272-1642.

All other inquiries concerning either the examination or status of the application should be directed to the Technology Center.

The application is being forwarded to the Technology Center Art Unit 3611 for action on the merits commensurate with this decision.

David Bucci
Petitions Examiner
Office of Petitions

UNITED STATES PATENT AND TRADEMARK OFFICE

Commissioner for Patents
United States Patent and Trademark Office
P.O. Box 1450
Alexandria, VA 22313-1450
www.uspto.gov

BUSKOP LAW GROUP, P.C.
1776 YORKTOWN
SUITE 550
HOUSTON TX 77056

COPY MAILED

AUG 2 1 2006

OFFICE OF PETITIONS

In re Application of	:	
Tandy, et al.	:	
Application No. 11/416972	:	DECISION ON PETITION
Filed: May 3, 2006	:	TO MAKE SPECIAL UNDER
Attorney Docket No. 1419.005	:	37 CFR 1.102(c)(1)
	:	

This is a decision on the petition under 37 CFR 1.102(c)(1), filed May 3, 2006, to make the above-identified application special based on applicant's age as set forth in M.P.E.P. § 708.02, Section IV.

The petition is **GRANTED**.

A grantable petition to make an application special under 37 CFR 1.102(c)(1) and MPEP § 708.02, Section IV: Applicant's Age, must be accompanied by evidence showing that at least one of the applicants is 65 years of age, or more, such as a birth certificate or a statement by applicant. No fee is required.

The instant petition includes copy of state drivers license. Accordingly, the above-identified application has been accorded "special" status.

Telephone inquiries concerning this decision should be directed to April Wise at 571-272-1642.

All other inquiries concerning either the examination or status of the application should be directed to the Technology Center.

The application is being forwarded to the Technology Center Art Unit 3663 for action on the merits commensurate with this decision.

Denise Pothier
Petitions Examiner
Office of Petitions

UNITED STATES PATENT AND TRADEMARK OFFICE

UNITED STATES DEPARTMENT OF COMMERCE
United States Patent and Trademark Office
Address: COMMISSIONER FOR PATENTS
P.O. Box 1450
Alexandria, Virginia 22313-1450
www.uspto.gov

PROSKAUER ROSE LLP
ONE INTERNATIONAL PLACE
BOSTON, MA 02110

Mail Date: 04/27/2010

Applicant	: Alexis F. Sauer-Budge	: DECISION ON REQUEST FOR
Patent Number	: 7632638	: RECALCULATION of PATENT
Issue Date	: 12/15/2009	: TERM ADJUSTMENT IN VIEW
Application No	: 11/416,997	: OF WYETH AND NOTICE OF INTENT TO
Filed	: 05/02/2006	: ISSUE CERTIFICATE OF CORRECTION
		:

The Request for Recalculation is **GRANTED** to the extent indicated.

The patent term adjustment has been determined to be **0** days. The USPTO will *sua sponte* issue a certificate of correction reflecting the amount of PTA days determined by the recalculation.

Prior to the issuance of the certificate of correction, the USPTO will afford patentee an opportunity to be heard and request reconsideration. Accordingly, patentee has **one month or thirty (30) days**, whichever is longer, to file a request for reconsideration of this patent term adjustment calculation. See 35 U.S.C. 154(b)(3)(B)(ii) and 37 CFR 1.322(a)(4). No extensions of time will be granted under 37 CFR 1.136.

Patentee should use document code PET.OP if electronically filing a request for reconsideration of this patent term adjustment calculation. The patentee must also include the information required by 37 CFR 1.705(b)(2) and the fee required by 37 CFR 1.18(e). If patentee does not file a timely request for reconsideration of this patent term adjustment calculation including the information required by 37 CFR 1.705(b)(2) and the fee required by 37 CFR 1.18(e), the USPTO will issue a certificate of correction reflecting the PTA determination noted above.

Patentee should be aware that in order to preserve the right to review in the United States District Court for the District of Columbia of the USPTO patent term adjustment determination, patentee must ensure that he or she also take the steps required under 35 U.S.C. 154(b)(4)(A) in a timely manner. Nothing in the request for recalculation should be construed as providing an alternative time frame for commencing a civil action under 35 U.S.C. 154(b)(4)(A).

Any questions concerning this decision should be directed to the Office of Patent Legal Administration at 571-272-7702.

UNITED STATES PATENT AND TRADEMARK OFFICE

UNITED STATES DEPARTMENT OF COMMERCE
United States Patent and Trademark Office
Address: COMMISSIONER FOR PATENTS
P.O. Box 1450
Alexandria, Virginia 22313-1450
www.uspto.gov

PROSKAUER ROSE LLP
ONE INTERNATIONAL PLACE
BOSTON, MA 02110

Mail Date: 04/21/2010

Applicant	: Alexis F. Sauer-Budge	: DECISION ON REQUEST FOR
Patent Number	: 7629137	: RECALCULATION of PATENT
Issue Date	: 12/08/2009	: TERM ADJUSTMENT IN VIEW
Appliction No	: 11/416,998	: OF WYETH AND NOTICE OF INTENT TO
Filed	: 05/02/2006	: ISSUE CERTIFICATE OF CORRECTION
		:

The Request for Recalculation is **GRANTED** to the extent indicated.

The patent term adjustment has been determined to be **354** days. The USPTO will *sua sponte* issue a certificate of correction reflecting the amount of PTA days determined by the recalculation.

Prior to the issuance of the certificate of correction, the USPTO will afford patentee an opportunity to be heard and request reconsideration. Accordingly, patentee has **one month or thirty (30) days**, whichever is longer, to file a request for reconsideration of this patent term adjustment calculation. See 35 U.S.C. 154(b)(3)(B)(ii) and 37 CFR 1.322(a)(4). No extensions of time will be granted under 37 CFR 1.136.

Patentee should use document code PET.OP if electronically filing a request for reconsideration of this patent term adjustment calculation. The patentee must also include the information required by 37 CFR 1.705(b)(2) and the fee required by 37 CFR 1.18(e). If patentee does not file a timely request for reconsideration of this patent term adjustment calculation including the information required by 37 CFR 1.705(b)(2) and the fee required by 37 CFR 1.18(e), the USPTO will issue a certificate of correction reflecting the PTA determination noted above.

Patentee should be aware that in order to preserve the right to review in the United States District Court for the District of Columbia of the USPTO patent term adjustment determination, patentee must ensure that he or she also take the steps required under 35 U.S.C. 154(b)(4)(A) in a timely manner. Nothing in the request for recalculation should be construed as providing an alternative time frame for commencing a civil action under 35 U.S.C. 154(b)(4)(A).

Any questions concerning this decision should be directed to the Office of Patent Legal Administration at 571-272-7702.

UNITED STATES PATENT AND TRADEMARK OFFICE

UNITED STATES DEPARTMENT OF COMMERCE
United States Patent and Trademark Office
Address: COMMISSIONER FOR PATENTS
P.O. Box 1450
Alexandria, Virginia 22313-1450
www.uspto.gov

PROSKAUER ROSE LLP
ONE INTERNATIONAL PLACE
BOSTON, MA 02110

Mail Date: 04/21/2010

Applicant	: Brett P. Masters	: DECISION ON REQUEST FOR
Patent Number	: 7615381	: RECALCULATION of PATENT
Issue Date	: 11/10/2009	: TERM ADJUSTMENT IN VIEW
Appliction No	: 11/417,000	: OF WYETH AND NOTICE OF INTENT TO
Filed	: 05/02/2006	: ISSUE CERTIFICATE OF CORRECTION
		:

The Request for Recalculation is **GRANTED** to the extent indicated.

The patent term adjustment has been determined to be **319** days. The USPTO will *sua sponte* issue a certificate of correction reflecting the amount of PTA days determined by the recalculation.

Prior to the issuance of the certificate of correction, the USPTO will afford patentee an opportunity to be heard and request reconsideration. Accordingly, patentee has **one month or thirty (30) days**, whichever is longer, to file a request for reconsideration of this patent term adjustment calculation. See 35 U.S.C. 154(b)(3)(B)(ii) and 37 CFR 1.322(a)(4). No extensions of time will be granted under 37 CFR 1.136.

Patentee should use document code PET.OP if electronically filing a request for reconsideration of this patent term adjustment calculation. The patentee must also include the information required by 37 CFR 1.705(b)(2) and the fee required by 37 CFR 1.18(e). If patentee does not file a timely request for reconsideration of this patent term adjustment calculation including the information required by 37 CFR 1.705(b)(2) and the fee required by 37 CFR 1.18(e), the USPTO will issue a certificate of correction reflecting the PTA determination noted above.

Patentee should be aware that in order to preserve the right to review in the United States District Court for the District of Columbia of the USPTO patent term adjustment determination, patentee must ensure that he or she also take the steps required under 35 U.S.C. 154(b)(4)(A) in a timely manner. Nothing in the request for recalculation should be construed as providing an alternative time frame for commencing a civil action under 35 U.S.C. 154(b)(4)(A).

Any questions concerning this decision should be directed to the Office of Patent Legal Administration at 571-272-7702.

UNITED STATES PATENT AND TRADEMARK OFFICE

UNITED STATES DEPARTMENT OF COMMERCE
United States Patent and Trademark Office
Address: COMMISSIONER FOR PATENTS
P.O. Box 1450
Alexandria, Virginia 22313-1450
www.uspto.gov

PROSKAUER ROSE LLP
ONE INTERNATIONAL PLACE
BOSTON, MA 02110

Mail Date: 04/21/2010

Applicant	: Brett P. Masters	: DECISION ON REQUEST FOR
Patent Number	: 7598094	: RECALCULATION of PATENT
Issue Date	: 10/06/2009	: TERM ADJUSTMENT IN VIEW
Appliction No	: 11/417,005	: OF WYETH AND NOTICE OF INTENT TO
Filed	: 05/02/2006	: ISSUE CERTIFICATE OF CORRECTION
		:

The Request for Recalculation is **GRANTED** to the extent indicated.

The patent term adjustment has been determined to be **284** days. The USPTO will *sua sponte* issue a certificate of correction reflecting the amount of PTA days determined by the recalculation.

Prior to the issuance of the certificate of correction, the USPTO will afford patentee an opportunity to be heard and request reconsideration. Accordingly, patentee has **one month or thirty (30) days**, whichever is longer, to file a request for reconsideration of this patent term adjustment calculation. See 35 U.S.C. 154(b)(3)(B)(ii) and 37 CFR 1.322(a)(4). No extensions of time will be granted under 37 CFR 1.136.

Patentee should use document code PET.OP if electronically filing a request for reconsideration of this patent term adjustment calculation. The patentee must also include the information required by 37 CFR 1.705(b)(2) and the fee required by 37 CFR 1.18(e). If patentee does not file a timely request for reconsideration of this patent term adjustment calculation including the information required by 37 CFR 1.705(b)(2) and the fee required by 37 CFR 1.18(e), the USPTO will issue a certificate of correction reflecting the PTA determination noted above.

Patentee should be aware that in order to preserve the right to review in the United States District Court for the District of Columbia of the USPTO patent term adjustment determination, patentee must ensure that he or she also take the steps required under 35 U.S.C. 154(b)(4)(A) in a timely manner. Nothing in the request for recalculation should be construed as providing an alternative time frame for commencing a civil action under 35 U.S.C. 154(b)(4)(A).

Any questions concerning this decision should be directed to the Office of Patent Legal Administration at 571-272-7702.

UNITED STATES PATENT AND TRADEMARK OFFICE

UNITED STATES DEPARTMENT OF COMMERCE
United States Patent and Trademark Office
Address: COMMISSIONER FOR PATENTS
P.O. Box 1450
Alexandria, Virginia 22313-1450
www.uspto.gov

KNOBBE MARTENS OLSON & BEAR LLP
2040 MAIN STREET
FOURTEENTH FLOOR
IRVINE, CA 92614

Mail Date: 04/20/2010

Applicant	: David E. Williams	: DECISION ON REQUEST FOR
Patent Number	: 7613617	: RECALCULATION of PATENT
Issue Date	: 11/03/2009	: TERM ADJUSTMENT IN VIEW
Appliction No	: 11/417,007	: OF WYETH AND NOTICE OF INTENT TO
Filed	: 05/03/2006	: ISSUE CERTIFICATE OF CORRECTION
		:

The Request for Recalculation is **GRANTED** to the extent indicated.

The patent term adjustment has been determined to be **607** days. The USPTO will *sua sponte* issue a certificate of correction reflecting the amount of PTA days determined by the recalculation.

Prior to the issuance of the certificate of correction, the USPTO will afford patentee an opportunity to be heard and request reconsideration. Accordingly, patentee has **one month or thirty (30) days**, whichever is longer, to file a request for reconsideration of this patent term adjustment calculation. See 35 U.S.C. 154(b)(3)(B)(ii) and 37 CFR 1.322(a)(4). No extensions of time will be granted under 37 CFR 1.136.

Patentee should use document code PET.OP if electronically filing a request for reconsideration of this patent term adjustment calculation. The patentee must also include the information required by 37 CFR 1.705(b)(2) and the fee required by 37 CFR 1.18(e). If patentee does not file a timely request for reconsideration of this patent term adjustment calculation including the information required by 37 CFR 1.705(b)(2) and the fee required by 37 CFR 1.18(e), the USPTO will issue a certificate of correction reflecting the PTA determination noted above.

Patentee should be aware that in order to preserve the right to review in the United States District Court for the District of Columbia of the USPTO patent term adjustment determination, patentee must ensure that he or she also take the steps required under 35 U.S.C. 154(b)(4)(A) in a timely manner. Nothing in the request for recalculation should be construed as providing an alternative time frame for commencing a civil action under 35 U.S.C. 154(b)(4)(A).

Any questions concerning this decision should be directed to the Office of Patent Legal Administration at 571-272-7702.

UNITED STATES PATENT AND TRADEMARK OFFICE

UNITED STATES DEPARTMENT OF COMMERCE
United States Patent and Trademark Office
Address: COMMISSIONER FOR PATENTS
P.O. Box 1450
Alexandria, Virginia 22313-1450
www.uspto.gov

KNOBBE MARTENS OLSON & BEAR LLP
2040 MAIN STREET
FOURTEENTH FLOOR
IRVINE, CA 92614

Mail Date: 05/25/2010

Applicant	: David E. Williams	: DECISION ON REQUEST FOR
Patent Number	: 7634332	: RECALCULATION of PATENT
Issue Date	: 12/15/2009	: TERM ADJUSTMENT IN VIEW
Application No	: 11/417,009	: OF WYETH AND NOTICE OF INTENT TO
Filed	: 05/03/2006	: ISSUE CERTIFICATE OF CORRECTION
		:

The Request for Recalculation is **GRANTED** to the extent indicated.

The patent term adjustment has been determined to be **305** days. The USPTO will *sua sponte* issue a certificate of correction reflecting the amount of PTA days determined by the recalculation.

Prior to the issuance of the certificate of correction, the USPTO will afford patentee an opportunity to be heard and request reconsideration. Accordingly, patentee has **one month or thirty (30) days**, whichever is longer, to file a request for reconsideration of this patent term adjustment calculation. See 35 U.S.C. 154(b)(3)(B)(ii) and 37 CFR 1.322(a)(4). No extensions of time will be granted under 37 CFR 1.136.

Patentee should use document code PET.OP if electronically filing a request for reconsideration of this patent term adjustment calculation. The patentee must also include the information required by 37 CFR 1.705(b)(2) and the fee required by 37 CFR 1.18(e). If patentee does not file a timely request for reconsideration of this patent term adjustment calculation including the information required by 37 CFR 1.705(b)(2) and the fee required by 37 CFR 1.18(e), the USPTO will issue a certificate of correction reflecting the PTA determination noted above.

Patentee should be aware that in order to preserve the right to review in the United States District Court for the District of Columbia of the USPTO patent term adjustment determination, patentee must ensure that he or she also take the steps required under 35 U.S.C. 154(b)(4)(A) in a timely manner. Nothing in the request for recalculation should be construed as providing an alternative time frame for commencing a civil action under 35 U.S.C. 154(b)(4)(A).

Any questions concerning this decision should be directed to the Office of Patent Legal Administration at 571-272-7702.

UNITED STATES PATENT AND TRADEMARK OFFICE

Commissioner for Patents
United States Patent and Trademark Office
P.O. Box 1450
Alexandria, VA 22313-1450
www.uspto.gov

O'MELVENY & MYERS, LLP
IP&T CALENDAR DEPARTMENT, LA-13-A7
400 SOUTH HOPE STREET
LOS ANGELES, CA 90071-2899

COPY MAILED

JUN 1 8 2009

OFFICE OF PETITIONS

In re Application of

Richard D. WINNETT, et al.
Application No. 11/417,012
Filed: May 2, 2006
Attorney Docket No. **335,699-078**

DECISION ON PETITION TO WITHDRAW FROM RECORD

This is a decision on the Request to Withdraw as attorney or agent of record under 37 C.F.R. § 1.36(b), filed February 27, 2009.

The request is **APPROVED**.

A grantable request to withdraw as attorney/agent of record must be signed by every attorney/agent seeking to withdraw or contain a clear indication that one attorney is signing on behalf of another/others.

The request was signed by John Kappos on behalf of all attorneys of record. All attorneys/agents associated have been withdrawn. Applicant is reminded that there is no attorney of record at this time.

The request to change the correspondence of record is not acceptable as the requested correspondence address as it is not that of: (1) the first named signing inventor; or (2) an intervening assignee of the entire interest under 37 C.F.R 3.71. All future communications from the Office will be directed to the first named signing inventor at the first copied address below until otherwise properly notified by the applicant.

In order to request or take action in a patent matter, the assignee must establish its ownership of the patent to the satisfaction of the Director. In this regard, a Statement under 37 CFR 3.73(b) must have either: (i) documentary evidence of a chain of title from the original owner to the assignee (*e.g.*, copy of an executed assignment), and a statement affirming that the documentary evidence of the chain of title from the original owner to the assignee was or concurrently is being submitted for recordation pursuant to § 3.11; or (ii) a statement specifying where documentary evidence of a chain of title from the original owner to the assignee is recorded in the assignment records of the Office (*e.g.*, reel and frame number).

The application became abandoned for failure to timely respond to the final Office action mailed September 24, 2008.

Telephone inquiries concerning this decision should be directed to the undersigned at 571-272-7253.

/Monica A. Graves/
Petitions Examiner, Office of Petitions

cc: **RICHARD D. WINNETT**
94 S. GREER STREET
MEMPHIS, TN 38111

cc: **GREYSTONE PHARMACEUTICALS, INC.**
16261 BASS ROAD, SUITE 202
FT. MYERS, FL 33908

UNITED STATES PATENT AND TRADEMARK OFFICE

Commissioner for Patents
United States Patent and Trademark Office
P.O. Box 1450
Alexandria, VA 22313-1450
www.uspto.gov

THOMAS J. PEROWSKI, ESQ., PC
SOUNDVIEW PLAZA
1266 EAST MAIN STREET
STAMFORD, CT 06902

COPY MAILED

DEC 19 2006

OFFICE OF PETITIONS

In re Application of	:	
GOOD	:	
Application No. 11/417,015	:	DECISION ON PETITION
Filed: May 3, 2006	:	TO WITHDRAW
Attorney Docket No. 108-120USANI0	:	FROM RECORD
	:	

This is a decision on the Request to Withdraw as attorney or agent of record under 37 C.F.R. § 1.36(b), filed October 23, 2006.

The request is **APPROVED**.

A grantable request to withdraw as attorney/agent of record must be signed by every attorney/agent seeking to withdraw or contain a clear indication that one attorney is signing on behalf of another/others. A request to withdraw will not be approved unless at least 30 (thirty) days would remain between the date of approval and the later of the expiration date of a time to file a response or the expiration date of the maximum time period which can be extended under 37 C.F.R. § 1.136(a).

The request was signed by Thomas J. Perkowski. Jay Sbrollini has been withdrawn as attorney or agent of record; Thomas J. Perkowski remains the sole attorney of record.

The correspondence address of record remains unchanged. Telephone inquiries concerning this decision should be directed to the undersigned at 571-272-7253.

Monica A. Graves
Petitions Examiner
Office of Petitions

UNITED STATES PATENT AND TRADEMARK OFFICE

UNITED STATES DEPARTMENT OF COMMERCE
United States Patent and Trademark Office
Address: COMMISSIONER FOR PATENTS
P.O. Box 1450
Alexandria, Virginia 22313-1450
www.uspto.gov

APPLICATION NUMBER	FILING OR 371 (c) DATE	FIRST NAMED APPLICANT	ATTY. DOCKET NO./TITLE
11/417,015	05/03/2006	Timothy Good	108-120USANI0

CONFIRMATION NO. 6011

OC000000021655617

Thomas J. Perkowski, Esq., P.C.
Soundview Plaza
1266 East Main Street
Stamford, CT 06902

Date Mailed: 12/18/2006

NOTICE OF ACCEPTANCE OF POWER OF ATTORNEY

This is in response to the Power of Attorney filed 10/23/2006.

The Power of Attorney in this application is accepted. Correspondence in this application will be mailed to the above address as provided by 37 CFR 1.33.

Jay Sbrollini has been withdrawn as attorney of record. Thomas J. Perkowski remains the sole attorney of record.

MONICA A GRAVES
OP (571) 272-7253

ATTORNEY/APPLICANT COPY

UNITED STATES PATENT AND TRADEMARK OFFICE

UNITED STATES DEPARTMENT OF COMMERCE
United States Patent and Trademark Office
Address: COMMISSIONER FOR PATENTS
P.O. Box 1450
Alexandria, Virginia 22313-1450
www.uspto.gov

BIRCH STEWART KOLASCH & BIRCH
PO BOX 747
FALLS CHURCH, VA 22040-0747

Mail Date: 04/20/2010

Applicant	: Nobuo Hosoya	: DECISION ON REQUEST FOR
Patent Number	: 7644716	: RECALCULATION of PATENT
Issue Date	: 01/12/2010	: TERM ADJUSTMENT IN VIEW
Appliction No	: 11/417,020	: OF WYETH AND NOTICE OF INTENT TO
Filed	: 05/04/2006	: ISSUE CERTIFICATE OF CORRECTION
		:

The Request for Recalculation is **GRANTED** to the extent indicated.

The patent term adjustment has been determined to be **461** days. The USPTO will *sua sponte* issue a certificate of correction reflecting the amount of PTA days determined by the recalculation.

Prior to the issuance of the certificate of correction, the USPTO will afford patentee an opportunity to be heard and request reconsideration. Accordingly, patentee has **one month or thirty (30) days**, whichever is longer, to file a request for reconsideration of this patent term adjustment calculation. See 35 U.S.C. 154(b)(3)(B)(ii) and 37 CFR 1.322(a)(4). No extensions of time will be granted under 37 CFR 1.136.

Patentee should use document code PET.OP if electronically filing a request for reconsideration of this patent term adjustment calculation. The patentee must also include the information required by 37 CFR 1.705(b)(2) and the fee required by 37 CFR 1.18(e). If patentee does not file a timely request for reconsideration of this patent term adjustment calculation including the information required by 37 CFR 1.705(b)(2) and the fee required by 37 CFR 1.18(e), the USPTO will issue a certificate of correction reflecting the PTA determination noted above.

Patentee should be aware that in order to preserve the right to review in the United States District Court for the District of Columbia of the USPTO patent term adjustment determination, patentee must ensure that he or she also take the steps required under 35 U.S.C. 154(b)(4)(A) in a timely manner. Nothing in the request for recalculation should be construed as providing an alternative time frame for commencing a civil action under 35 U.S.C. 154(b)(4)(A).

Any questions concerning this decision should be directed to the Office of Patent Legal Administration at 571-272-7702.

UNITED STATES PATENT AND TRADEMARK OFFICE

UNITED STATES DEPARTMENT OF COMMERCE
United States Patent and Trademark Office
Address: COMMISSIONER FOR PATENTS
P.O. Box 1450
Alexandria, Virginia 22313-1450
www.uspto.gov

CANTOR COLBURN, LLP
20 Church Street
22nd Floor
Hartford, CT 06103

Mail Date: 04/20/2010

Applicant	: Hyeon Jin Shin	: DECISION ON REQUEST FOR
Patent Number	: 7633087	: RECALCULATION of PATENT
Issue Date	: 12/15/2009	: TERM ADJUSTMENT IN VIEW
Appliction No	: 11/417,026	: OF WYETH AND NOTICE OF INTENT TO
Filed	: 05/03/2006	: ISSUE CERTIFICATE OF CORRECTION
		:

The Request for Recalculation is **GRANTED** to the extent indicated.

The patent term adjustment has been determined to be **718** days. The USPTO will *sua sponte* issue a certificate of correction reflecting the amount of PTA days determined by the recalculation.

Prior to the issuance of the certificate of correction, the USPTO will afford patentee an opportunity to be heard and request reconsideration. Accordingly, patentee has **one month or thirty (30) days**, whichever is longer, to file a request for reconsideration of this patent term adjustment calculation. See 35 U.S.C. 154(b)(3)(B)(ii) and 37 CFR 1.322(a)(4). No extensions of time will be granted under 37 CFR 1.136.

Patentee should use document code PET.OP if electronically filing a request for reconsideration of this patent term adjustment calculation. The patentee must also include the information required by 37 CFR 1.705(b)(2) and the fee required by 37 CFR 1.18(e). If patentee does not file a timely request for reconsideration of this patent term adjustment calculation including the information required by 37 CFR 1.705(b)(2) and the fee required by 37 CFR 1.18(e), the USPTO will issue a certificate of correction reflecting the PTA determination noted above.

Patentee should be aware that in order to preserve the right to review in the United States District Court for the District of Columbia of the USPTO patent term adjustment determination, patentee must ensure that he or she also take the steps required under 35 U.S.C. 154(b)(4)(A) in a timely manner. Nothing in the request for recalculation should be construed as providing an alternative time frame for commencing a civil action under 35 U.S.C. 154(b)(4)(A).

Any questions concerning this decision should be directed to the Office of Patent Legal Administration at 571-272-7702.

UNITED STATES PATENT AND TRADEMARK OFFICE

UNITED STATES DEPARTMENT OF COMMERCE
United States Patent and Trademark Office
Address: COMMISSIONER FOR PATENTS
P.O. Box 1450
Alexandria, Virginia 22313-1450
www.uspto.gov

MCDERMOTT WILL & EMERY LLP
600 13TH STREET, N.W.
WASHINGTON, DC 20005-3096

Mail Date: 04/27/2010

Applicant	: Noriaki Ikeda	: DECISION ON REQUEST FOR
Patent Number	: 7399701	: RECALCULATION of PATENT
Issue Date	: 07/15/2008	: TERM ADJUSTMENT IN VIEW
Application No	: 11/417,044	: OF WYETH
Filed	: 05/04/2006	:
		:

The Patentee's Request for Recalculation is **DISMISSED.**

This Request is deemed ineligible for consideration for one or more of the following reasons:

(A). The patent for which PTA recalculation is requested is either a design or reissue application or is a reexamination proceeding;

(B). The patent for which PTA recalculation is requested resulted from a utility or plant application filed under 35 USC 111(a) before May 29, 2000 and no CPA filed in the application on/after May 29, 2000;

(C). The patent for which PTA recalculation is requested resulted from an international application in which the international filing date was before May 29, 2000 and no CPA filed in the application on/after May 29, 2000;

(D). The patent for which PTA recalculation is requested issued on/after March 2, 2010;

(E). The Request for Recalculation was filed more than 180 days after the grant date of the patent and the request was not filed within two months of a dismissal of a request for reconsideration of the of the patent term under 37 CFR 1.705(d);

(F). The Request for Recalculation is not solely limited to USPTO pre-Wyeth interpretation of 35 U.S.C. 154(b)(2)(A);

or

(G). A civil action was filed pursuant to 35 U.S.C. 154(b)(4)(A)concerning the same patent at issue in this request.

Patentee may file a reply to this decision dismissing the Request for Recalculation. Patentee must file such reply within one month or thirty days, whichever is longer, of the mail date of the decision dismissing the Request for Recalculation. No fee is required if patentee is asserting in the reply that the dismissal for ineligibility is improper.

Patentee should use document code PET.OP if electronically filing a reply to this dismissal. If the USPTO finds that the request was improperly deemed ineligible, the USPTO will mail applicant a recalculation determination.

Patentee should be aware that in order to preserve the right to review in the United States District Court for the District of Columbia of the USPTO patent term adjustment determination, patentee must ensure that he or she also take the steps required under 35 U.S.C. 154(b)(4)(A). Nothing in the request for recalculation should be construed as providing an alternative time frame for commencing a civil action under 35 U.S.C. 154 (b)(4)(A).

Any questions concerning this decision should be directed to the Office of Patent Legal Administration at 571-272-7702.

UNITED STATES PATENT AND TRADEMARK OFFICE

UNITED STATES DEPARTMENT OF COMMERCE
United States Patent and Trademark Office
Address: COMMISSIONER FOR PATENTS
P.O. Box 1450
Alexandria, Virginia 22313-1450
www.uspto.gov

GOODWIN PROCTER LLP
901 NEW YORK AVENUE, N.W.
WASHINGTON, DC 20001

Mail Date: 05/21/2010

Applicant	: Brian K. Bonner	: DECISION ON REQUEST FOR
Patent Number	: 7647268	: RECALCULATION of PATENT
Issue Date	: 01/12/2010	: TERM ADJUSTMENT IN VIEW
Application No	: 11/417,049	: OF WYETH AND NOTICE OF INTENT TO
Filed	: 05/04/2006	: ISSUE CERTIFICATE OF CORRECTION
		:

The Request for Recalculation is **GRANTED** to the extent indicated.

The patent term adjustment has been determined to be **463** days. The USPTO will *sua sponte* issue a certificate of correction reflecting the amount of PTA days determined by the recalculation.

Prior to the issuance of the certificate of correction, the USPTO will afford patentee an opportunity to be heard and request reconsideration. Accordingly, patentee has **one month or thirty (30) days**, whichever is longer, to file a request for reconsideration of this patent term adjustment calculation. See 35 U.S.C. 154(b)(3)(B)(ii) and 37 CFR 1.322(a)(4). No extensions of time will be granted under 37 CFR 1.136.

Patentee should use document code PET.OP if electronically filing a request for reconsideration of this patent term adjustment calculation. The patentee must also include the information required by 37 CFR 1.705(b)(2) and the fee required by 37 CFR 1.18(e). If patentee does not file a timely request for reconsideration of this patent term adjustment calculation including the information required by 37 CFR 1.705(b)(2) and the fee required by 37 CFR 1.18(e), the USPTO will issue a certificate of correction reflecting the PTA determination noted above.

Patentee should be aware that in order to preserve the right to review in the United States District Court for the District of Columbia of the USPTO patent term adjustment determination, patentee must ensure that he or she also take the steps required under 35 U.S.C. 154(b)(4)(A) in a timely manner. Nothing in the request for recalculation should be construed as providing an alternative time frame for commencing a civil action under 35 U.S.C. 154(b)(4)(A).

Any questions concerning this decision should be directed to the Office of Patent Legal Administration at 571-272-7702.

UNITED STATES PATENT AND TRADEMARK OFFICE

Commissioner for Patents
United States Patent and Trademark Office
P.O. Box 1450
Alexandria, VA 22313-1450
www.uspto.gov

FOLEY AND LARDNER LLP
SUITE 500
3000 K STREET NW
WASHINGTON, DC 20007

COPY MAILED

APR 0 7 2008

OFFICE OF PETITIONS

In re Application of	:	
Daniel Cox	:	
Application No. 11/417,060	:	DECISION ON PETITION
Filed: May 4, 2006	:	TO WITHDRAW
Attorney Docket No. 068099-0102	:	FROM RECORD
	:	

This is a decision on the Request to Withdraw as attorney or agent of record under 37 C.F.R. § 1.36(b), filed September 26, 2007 and November 14, 2007.

The request is **APPROVED**.

A grantable request to withdraw as attorney/agent of record must be signed by every attorney/agent seeking to withdraw or contain a clear indication that one attorney is signing on behalf of another/others. A request to withdraw will not be approved unless at least 30 (thirty) days would remain between the date of approval and the later of the expiration date of a time to file a response or the expiration date of the maximum time period which can be extended under 37 C.F.R. § 1.136(a).

The request was signed by Alan I. Cantor on behalf of all attorneys of record who are associated with customer No. 22428.

All attorneys/agents associated with the Customer Number 22428 have been withdrawn.

Applicant is reminded that there is no attorney of record at this time.

The request to change the correspondence of record is not acceptable as the requested correspondence address is not that of: (1) the first named signing inventor; or (2) an intervening assignee of the entire interest under 37 C.F.R 3.71. All future communications from the Office will be directed to the first named signing inventor at the first copied address below until otherwise properly notified by the applicant.

In order to request or take action in a patent matter, the assignee must establish its ownership of the patent to the satisfaction of the Director. In this regard, a Statement under 37 CFR 3.73(b) must have either: (i) documentary evidence of a chain of title from the original owner to the assignee (*e.g.*, copy of an executed assignment), and a statement affirming that the documentary evidence of the chain of title from the original owner to the assignee was or concurrently is being submitted for recordation pursuant to § 3.11; or (ii) a statement specifying where documentary evidence of a chain of title from the original owner to the assignee is recorded in the assignment records of the Office (*e.g.*, reel and frame number).

There are no pending Office actions at the present time.

Telephone inquiries concerning this decision should be directed to undersigned at 571-272-1642.

April M. Wise
Petitions Examiner
Office of Petitions

cc: DANIEL COX
3604 WEST MEADOWS LANE
ELON, NC 27244

cc: TROY M. SCHMELZER
HOGAN & HARTSON, LLP
1999 AVENUE OF THE STARS
SUITE 1400
LOS ANGELES, CA 90067

UNITED STATES PATENT AND TRADEMARK OFFICE

UNITED STATES DEPARTMENT OF COMMERCE
United States Patent and Trademark Office
Address: COMMISSIONER FOR PATENTS
P.O. Box 1450
Alexandria, Virginia 22313-1450
www.uspto.gov

APPLICATION NUMBER	FILING OR 371(C) DATE	FIRST NAMED APPLICANT	ATTY. DOCKET NO./TITLE
11/417,060	05/04/2006	Daniel Cox	068099-0102

CONFIRMATION NO. 8156

POWER OF ATTORNEY NOTICE

22428
FOLEY AND LARDNER LLP
SUITE 500
3000 K STREET NW
WASHINGTON, DC 20007

OC000000029271732

Date Mailed: 04/07/2008

NOTICE REGARDING CHANGE OF POWER OF ATTORNEY

This is in response to the Power of Attorney filed 11/14/2007.

- The withdrawal as attorney in this application has been accepted. Future correspondence will be mailed to the new address of record. 37 CFR 1.33.

/amwise/

Office of Initial Patent Examination (571) 272-4000 or 1-800-PTO-9199

UNITED STATES PATENT AND TRADEMARK OFFICE

UNITED STATES DEPARTMENT OF COMMERCE
United States Patent and Trademark Office
Address: COMMISSIONER FOR PATENTS
P.O. Box 1450
Alexandria, Virginia 22313-1450
www.uspto.gov

QUARLES & BRADY LLP
411 E. WISCONSIN AVENUE
SUITE 2040
MILWAUKEE, WI 53202-4497

Mail Date: 04/20/2010

Applicant	: Timothy E. Sawyer	: DECISION ON REQUEST FOR
Patent Number	: 7606405	: RECALCULATION of PATENT
Issue Date	: 10/20/2009	: TERM ADJUSTMENT IN VIEW
Appliction No	: 11/417,080	: OF WYETH AND NOTICE OF INTENT TO
Filed	: 05/03/2006	: ISSUE CERTIFICATE OF CORRECTION
		:

The Request for Recalculation is **GRANTED** to the extent indicated.

The patent term adjustment has been determined to be **533** days. The USPTO will *sua sponte* issue a certificate of correction reflecting the amount of PTA days determined by the recalculation.

Prior to the issuance of the certificate of correction, the USPTO will afford patentee an opportunity to be heard and request reconsideration. Accordingly, patentee has **one month or thirty (30) days**, whichever is longer, to file a request for reconsideration of this patent term adjustment calculation. See 35 U.S.C. 154(b)(3)(B)(ii) and 37 CFR 1.322(a)(4). No extensions of time will be granted under 37 CFR 1.136.

Patentee should use document code PET.OP if electronically filing a request for reconsideration of this patent term adjustment calculation. The patentee must also include the information required by 37 CFR 1.705(b)(2) and the fee required by 37 CFR 1.18(e). If patentee does not file a timely request for reconsideration of this patent term adjustment calculation including the information required by 37 CFR 1.705(b)(2) and the fee required by 37 CFR 1.18(e), the USPTO will issue a certificate of correction reflecting the PTA determination noted above.

Patentee should be aware that in order to preserve the right to review in the United States District Court for the District of Columbia of the USPTO patent term adjustment determination, patentee must ensure that he or she also take the steps required under 35 U.S.C. 154(b)(4)(A) in a timely manner. Nothing in the request for recalculation should be construed as providing an alternative time frame for commencing a civil action under 35 U.S.C. 154(b)(4)(A).

Any questions concerning this decision should be directed to the Office of Patent Legal Administration at 571-272-7702.

UNITED STATES PATENT AND TRADEMARK OFFICE

UNITED STATES DEPARTMENT OF COMMERCE
United States Patent and Trademark Office
Address: COMMISSIONER FOR PATENTS
P.O. Box 1450
Alexandria, Virginia 22313-1450
www.uspto.gov

Setter Roche LLP
P.O. Box 780
Erie, CO 80516

Mail Date: 04/20/2010

Applicant	: Curtis H. Bruner	: DECISION ON REQUEST FOR
Patent Number	: 7577809	: RECALCULATION of PATENT
Issue Date	: 08/18/2009	: TERM ADJUSTMENT IN VIEW
Appliction No	: 11/417,095	: OF WYETH AND NOTICE OF INTENT TO
Filed	: 05/03/2006	: ISSUE CERTIFICATE OF CORRECTION
		:

The Request for Recalculation is **GRANTED** to the extent indicated.

The patent term adjustment has been determined to be **355** days. The USPTO will *sua sponte* issue a certificate of correction reflecting the amount of PTA days determined by the recalculation.

Prior to the issuance of the certificate of correction, the USPTO will afford patentee an opportunity to be heard and request reconsideration. Accordingly, patentee has **one month or thirty (30) days**, whichever is longer, to file a request for reconsideration of this patent term adjustment calculation. See 35 U.S.C. 154(b)(3)(B)(ii) and 37 CFR 1.322(a)(4). No extensions of time will be granted under 37 CFR 1.136.

Patentee should use document code PET.OP if electronically filing a request for reconsideration of this patent term adjustment calculation. The patentee must also include the information required by 37 CFR 1.705(b)(2) and the fee required by 37 CFR 1.18(e). If patentee does not file a timely request for reconsideration of this patent term adjustment calculation including the information required by 37 CFR 1.705(b)(2) and the fee required by 37 CFR 1.18(e), the USPTO will issue a certificate of correction reflecting the PTA determination noted above.

Patentee should be aware that in order to preserve the right to review in the United States District Court for the District of Columbia of the USPTO patent term adjustment determination, patentee must ensure that he or she also take the steps required under 35 U.S.C. 154(b)(4)(A) in a timely manner. Nothing in the request for recalculation should be construed as providing an alternative time frame for commencing a civil action under 35 U.S.C. 154(b)(4)(A).

Any questions concerning this decision should be directed to the Office of Patent Legal Administration at 571-272-7702.

UNITED STATES PATENT AND TRADEMARK OFFICE

Commissioner for Patents
United States Patent and Trademark Office
P.O. Box 1450
Alexandria, VA 22313-1450
www.uspto.gov

CARTER, DELUCA, FARRELL & SCHMIDT, LLP
445 BROAD HOLLOW ROAD
SUITE 420
MELVILLE NY 11747

MAILED

JUN 28 2010

OFFICE OF PETITIONS

In re Application of	:	
Richard W. Woods	:	
Application No. 11/417,130	:	ON PETITION
Filed: May 4, 2006	:	
Attorney Docket No. 1449-200	:	

This is a decision on the petition under the unintentional provisions of 37 CFR 1.137(b), filed May 14, 2010, to revive the above-identified application.

The petition is **GRANTED**.

The application became abandoned for failure to timely file a reply within the meaning of 37 CFR 1.113 to the final Office action of July 21, 2009. The proposed reply required for consideration of a petition to revive must be a Notice of Appeal (and appeal fee required by 37 CFR 41.20(b)(2), an amendment that *prima facie* places the application in condition for allowance, a Request for Continued Examination and submission (37 CFR 1.114), or the filing of a continuing application under 37 CFR 1.53(b). See MPEP 711.03(c)(III)(A)(2). No extensions of time pursuant to the provisions of 37 CFR 1.136(a) were obtained. Accordingly, the date of abandonment of this application is October 22, 2009.

The petition satisfies the requirements of 37 CFR 1.137(b) in that petitioner has supplied (1) the reply in the form of a Request for Continued Examination (RCE) and fee of $405, and the submission required by 37 CFR 1.114; (2) the petition fee of $810; and (3) a proper statement of unintentional delay.

Telephone inquiries concerning this decision should be directed to the undersigned at (571) 272-2991.

This application is being referred to Technology Center AU 3775 for processing of the RCE and for appropriate action by the Examiner in the normal course of business on the amendment submitted in accordance with 37 CFR 1.114.

Terri Johnson
Petitions Examiner
Office of Petitions

UNITED STATES PATENT AND TRADEMARK OFFICE

Commissioner for Patents
United States Patent and Trademark Office
P.O. Box 1450
Alexandria, VA 22313-1450
www.uspto.gov

Date: 02/07/08

Patent No. : 7241448 B2
Ser. No. : 11/417,131
Inventor(s) : JACKSON, DAVID CHARLES
Issued : 07/10/07
Title : **T HELPER CELL EPITOPES**
Docket No. : **47-230**

Re: Request for Certificate of Correction

Consideration has been given your request for the issuance of a certificate of correction for the above-identified patent under the provisions of Rule(s) 1.322 and/or 1.323.

Assignees' names and addresses (assignment data) printed in a patent, are based *solely* on information supplied in the appropriate space for identifying the assignment data, i.e., item 3 of the Issue Fee Transmittal Form PTOL-85B. Granting of a request under 37 CFR 3.81(b) is required to correct applicant's error providing ***incorrect or erroneous*** assignment data, *before* issuance of a Certificate of Correction, under 37 CFR 1.323 *(see Manual of Patent Examining Procedures (M.P.E.P) Chp.1400, sect. 1481).* This procedure is required *at any time after the issue fee is paid*, including after issuance of the patent.

In view of the foregoing, your request, in this mater, is hereby denied.

A request to correct the Assignee under 37 CFR 3.81(b) should include:

A. **the processing fee set forth in 37 CFR 1.117(h) (currently $130);**
B. a statement that the failure to include the correct assignee name on the PTOL-85B was inadvertent; and
C. a copy of the Notice of Recordation of Assignment Document, reflecting the reel and frame number where the assignment(s) is recorded and/or reflecting proof of *the date* the assignment was submitted for recordation.

In the Request, Applicant(s) may request that the file be forwarded to Certificates of Correction Branch, for issuance of a Certificate of Correction, if the Request is granted.

Any request under 37 CFR 3.81(b) should be directed to the following address or facsimile number:

By mail: Mail Stop PETITIONS
Commissioner for Patents
Post Office Box 1450
Alexandria, VA 22313-1450

By hand: Customer Service Window
Mail Stop Petitions
Randolph Building
401 Dulany Street
Alexandria, VA 22314

By fax: (703) 872-9306
ATTN: Office of Petitions

If a fee (currently $100) was previously submitted for consideration of a Request for Certificate of Correction, under CFR 1.323, to correct assignment data, no additional fee is required.

Lamonte M. Newsome
For Mary Diggs, Supervisor
Decisions & Certificates
Of Correction Branch
(703)-305-5358 or (703) 308-9390 #112

NIXON & VANDERHYE, PC
901 NORTH GLEBE ROAD, 11TH FLOOR
ARLINGTON VA 22203

LMN

UNITED STATES PATENT AND TRADEMARK OFFICE

Commissioner for Patents
United States Patent and Trademark Office
P.O. Box 1450
Alexandria, VA 22313-1450
www.uspto.gov

NIXON & VANDERHYE, PC
901 NORTH GLEBE ROAD, 11TH FLOOR
ARLINGTION VA 22203

COPY MAILED

OCT 28 2008

OFFICE OF PETITIONS

In re Patent No. 7,241,448	:	
Application No. 11/417,131	:	
Filed: May 4, 2006	:	ON PETITION
Issued: July 10, 2007	:	
Attorney Docket No. 47-230	:	

This is a decision on the petition filed April 28, 2008, which is being treated as a request under 37 CFR 3.81(b)[1] to correct the name of an assignee, as well as to add three additional assignees on the front page of the above-identified patent by way of a Certificate of Correction.

The request is **GRANTED**.

This matter is being referred to the Certificates of Correction Branch for issuance of the requested Certificate of Correction.

Petitioner submitted the $130.00 requisite surcharge on both August 22, 2007 and April 29, 2008, when only one payment was necessary. However, 37 CFR 3.81(b) also requires payment of the $100.00 Certificate of Correction fee, which will be collected from the excess monies. Accordingly, the remaining $30.00 will be credited to petitioner's deposit account as authorized on April 28, 2008.

Telephone inquiries concerning this decision may be directed to Joan Olszewski at (571) 272-7751. Inquiries regarding the issuance of a certificate of correction should be directed to the Certificate of Correction Branch at (571) 272-4200.

/Liana Walsh/
Liana Walsh
Petitions Examiner
Office of Petitions

[1] *See* MPEP 1309, subsection II; and Official Gazette of June 22, 2004.

UNITED STATES PATENT AND TRADEMARK OFFICE

UNITED STATES DEPARTMENT OF COMMERCE
United States Patent and Trademark Office
Address: COMMISSIONER FOR PATENTS
P.O. Box 1450
Alexandria, Virginia 22313-1450
www.uspto.gov

HUNTON & WILLIAMS LLP
INTELLECTUAL PROPERTY DEPARTMENT
1900 K STREET, N.W.
SUITE 1200
WASHINGTON, DC 20006-1109

Mail Date: 05/14/2010

Applicant	: Arnold Sepke	: DECISION ON REQUEST FOR
Patent Number	: 7615109	: RECALCULATION of PATENT
Issue Date	: 11/10/2009	: TERM ADJUSTMENT IN VIEW
Application No	: 11/417,167	: OF WYETH AND NOTICE OF INTENT TO
Filed	: 05/04/2006	: ISSUE CERTIFICATE OF CORRECTION
		:

The Request for Recalculation is **GRANTED** to the extent indicated.

The patent term adjustment has been determined to be **745** days. The USPTO will *sua sponte* issue a certificate of correction reflecting the amount of PTA days determined by the recalculation.

Prior to the issuance of the certificate of correction, the USPTO will afford patentee an opportunity to be heard and request reconsideration. Accordingly, patentee has **one month or thirty (30) days**, whichever is longer, to file a request for reconsideration of this patent term adjustment calculation. See 35 U.S.C. 154(b)(3)(B)(ii) and 37 CFR 1.322(a)(4). No extensions of time will be granted under 37 CFR 1.136.

Patentee should use document code PET.OP if electronically filing a request for reconsideration of this patent term adjustment calculation. The patentee must also include the information required by 37 CFR 1.705(b)(2) and the fee required by 37 CFR 1.18(e). If patentee does not file a timely request for reconsideration of this patent term adjustment calculation including the information required by 37 CFR 1.705(b)(2) and the fee required by 37 CFR 1.18(e), the USPTO will issue a certificate of correction reflecting the PTA determination noted above.

Patentee should be aware that in order to preserve the right to review in the United States District Court for the District of Columbia of the USPTO patent term adjustment determination, patentee must ensure that he or she also take the steps required under 35 U.S.C. 154(b)(4)(A) in a timely manner. Nothing in the request for recalculation should be construed as providing an alternative time frame for commencing a civil action under 35 U.S.C. 154(b)(4)(A).

Any questions concerning this decision should be directed to the Office of Patent Legal Administration at 571-272-7702.

UNITED STATES PATENT AND TRADEMARK OFFICE

UNITED STATES DEPARTMENT OF COMMERCE
United States Patent and Trademark Office
Address: COMMISSIONER FOR PATENTS
P.O. Box 1450
Alexandria, Virginia 22313-1450
www.uspto.gov

Kramer & Amado, P.C.
1725 Duke Street
Suite 240
Alexandria, VA 22314

Mail Date: 04/20/2010

Applicant	: Gary J. Puppa	: DECISION ON REQUEST FOR
Patent Number	: 7596094	: RECALCULATION of PATENT
Issue Date	: 09/29/2009	: TERM ADJUSTMENT IN VIEW
Appliction No	: 11/417,172	: OF WYETH AND NOTICE OF INTENT TO
Filed	: 05/04/2006	: ISSUE CERTIFICATE OF CORRECTION
		:

The Request for Recalculation is **GRANTED** to the extent indicated.

The patent term adjustment has been determined to be **729** days. The USPTO will *sua sponte* issue a certificate of correction reflecting the amount of PTA days determined by the recalculation.

Prior to the issuance of the certificate of correction, the USPTO will afford patentee an opportunity to be heard and request reconsideration. Accordingly, patentee has **one month or thirty (30) days**, whichever is longer, to file a request for reconsideration of this patent term adjustment calculation. See 35 U.S.C. 154(b)(3)(B)(ii) and 37 CFR 1.322(a)(4). No extensions of time will be granted under 37 CFR 1.136.

Patentee should use document code PET.OP if electronically filing a request for reconsideration of this patent term adjustment calculation. The patentee must also include the information required by 37 CFR 1.705(b)(2) and the fee required by 37 CFR 1.18(e). If patentee does not file a timely request for reconsideration of this patent term adjustment calculation including the information required by 37 CFR 1.705(b)(2) and the fee required by 37 CFR 1.18(e), the USPTO will issue a certificate of correction reflecting the PTA determination noted above.

Patentee should be aware that in order to preserve the right to review in the United States District Court for the District of Columbia of the USPTO patent term adjustment determination, patentee must ensure that he or she also take the steps required under 35 U.S.C. 154(b)(4)(A) in a timely manner. Nothing in the request for recalculation should be construed as providing an alternative time frame for commencing a civil action under 35 U.S.C. 154(b)(4)(A).

Any questions concerning this decision should be directed to the Office of Patent Legal Administration at 571-272-7702.

UNITED STATES PATENT AND TRADEMARK OFFICE

UNITED STATES DEPARTMENT OF COMMERCE
United States Patent and Trademark Office
Address: COMMISSIONER FOR PATENTS
P.O. Box 1450
Alexandria, Virginia 22313-1450
www.uspto.gov

Terry W. Kramer, Esq.
Kramer & Amado, P.C.
1725 Duke Street, Suite 240
Alexandria, VA 22314

Mail Date: 05/17/2010

Applicant : Gary J. Puppa
Patent Number : 7596094
Issue Date : 09/29/2009
Application No : 11/417,172
Filed : 05/04/2006

: NOTICE CONCERNING IMPROPER
: CALCULATION OF PATENT TERM
: ADJUSTMENT BASED UPON USPTO
: IMPROPERLY MEASURING REDUCTION
: PERIOD UNDER 37 CFR 1.704(c)(10).

The United States Patent and Trademark Office (USPTO) discovered that in processing the recent recalculation decisions mailed in response to patentee's filed Request for Recalculation of Patent Term Adjustment in view of Wyeth, the USPTO improperly measured the reduction period for reductions under 37 CFR 1.704(c)(10). Pursuant to 37 CFR 1.704(c)(10), patentee's reduction begins on the date of filing the amendment under 37 CFR 1.312 ("1.312 amendment") or other related paper and ends on the date that the Office mails a response to the filing of the 1.312 amendment or other paper. It has been discovered that during the recalculation, the calculation failed to the limit the reduction to the mail date of the response to the 1.312 amendment or other paper. Accordingly, patentee's reductions were greater than warranted.

This notice **VACATES** the previous GRANTED request for recalculation and provides patentee with a revised GRANTED recalculation.

The patent term adjustment has been determined to be **765** days. The USPTO will *sua sponte* issue a certificate of correction reflecting the amount of patent term adjustment (PTA) days determined by the recalculation.

Prior to the issuance of the certificate of correction, the USPTO will afford patentee an opportunity to be heard and request reconsideration. Accordingly, patentee has **one month or thirty (30) days** from the mail date of this notice, whichever is longer, to file a request for reconsideration of this PTA calculation. See 35 U.S.C. § 154(b)(3)(B)(ii) and 37 CFR 1.322(a)(4).

Patentee should use document code PET.OP if electronically filing a request for reconsideration of this PTA calculation. The patentee must also include the information required by 37 CFR 1.705(b)(2), and the fee required by 37 CFR 1.18(e). If patentee does not file a timely request for reconsideration of this PTA calculation, including the information required by 37 CFR 1.705(b)(2) and the fee required by 37 CFR 1.18(e), the USPTO will issue a certificate of correction reflecting the PTA determination noted above.

Patentee should be aware that in order to preserve the right of review of the USPTO's PTA determination in the United States District Court for the District of Columbia, patentee must ensure that the steps required under 35 U.S.C. § 154 (b)(4) are taken in a timely manner. Nothing in the request for recalculation should be construed as providing an alternative time frame for commencing a civil action under 35 U.S.C. § 154(b)(4).

UNITED STATES PATENT AND TRADEMARK OFFICE

UNITED STATES DEPARTMENT OF COMMERCE
United States Patent and Trademark Office
Address: COMMISSIONER FOR PATENTS
P.O. Box 1450
Alexandria, Virginia 22313-1450
www.uspto.gov

BACON & THOMAS, PLLC
625 SLATERS LANE
FOURTH FLOOR
ALEXANDRIA, VA 22314-1176

Mail Date: 07/16/2010

Applicant	: Stefan Simon Gustaaf Moriau	: DECISION ON REQUEST FOR
Patent Number	: 7644554	: RECALCULATION of PATENT
Issue Date	: 01/12/2010	: TERM ADJUSTMENT IN VIEW
Application No	: 11/417,189	: OF WYETH AND NOTICE OF INTENT TO
Filed	: 05/04/2006	: ISSUE CERTIFICATE OF CORRECTION
		:

The Request for Recalculation is **GRANTED** to the extent indicated.

The patent term adjustment has been determined to be **0** days. The USPTO will *sua sponte* issue a certificate of correction reflecting the amount of PTA days determined by the recalculation.

Prior to the issuance of the certificate of correction, the USPTO will afford patentee an opportunity to be heard and request reconsideration. Accordingly, patentee has **one month or thirty (30) days**, whichever is longer, to file a request for reconsideration of this patent term adjustment calculation. See 35 U.S.C. 154(b)(3)(B)(ii) and 37 CFR 1.322(a)(4). No extensions of time will be granted under 37 CFR 1.136.

Patentee should use document code PET.OP if electronically filing a request for reconsideration of this patent term adjustment calculation. The patentee must also include the information required by 37 CFR 1.705(b)(2) and the fee required by 37 CFR 1.18(e). If patentee does not file a timely request for reconsideration of this patent term adjustment calculation including the information required by 37 CFR 1.705(b)(2) and the fee required by 37 CFR 1.18(e), the USPTO will issue a certificate of correction reflecting the PTA determination noted above.

Patentee should be aware that in order to preserve the right to review in the United States District Court for the District of Columbia of the USPTO patent term adjustment determination, patentee must ensure that he or she also take the steps required under 35 U.S.C. 154(b)(4)(A) in a timely manner. Nothing in the request for recalculation should be construed as providing an alternative time frame for commencing a civil action under 35 U.S.C. 154(b)(4)(A).

Any questions concerning this decision should be directed to the Office of Patent Legal Administration at 571-272-7702.

UNITED STATES PATENT AND TRADEMARK OFFICE

UNITED STATES DEPARTMENT OF COMMERCE
United States Patent and Trademark Office
Address: COMMISSIONER FOR PATENTS
P.O. Box 1450
Alexandria, Virginia 22313-1450
www.uspto.gov

APPLICATION NO.	FILING DATE	FIRST NAMED INVENTOR	ATTORNEY DOCKET NO.	CONFIRMATION NO.
11/417,200	05/04/2006	Tsutomu Kanno	063979-0077	7732

7590 03/13/2008
McDERMOTT WILL & EMERY LLP
600 13th Street, N.W.
Washington, DC 20005-3096

EXAMINER
LE, DUNG ANH

ART UNIT	PAPER NUMBER
2818	

MAIL DATE	DELIVERY MODE
03/13/2008	PAPER

Please find below and/or attached an Office communication concerning this application or proceeding.

The time period for reply, if any, is set in the attached communication.

UNITED STATES PATENT AND TRADEMARK OFFICE

Commissioner for Patents
United States Patent and Trademark Office
P.O. Box 1450
Alexandria, VA 22313-1450
www.uspto.gov

McDERMOTT, WILL & EMEY LLP
600 Thirteenth Street, N.W.
Washington, DC 20005-3096

MAR 12 2008

In re Application of	:	
Tsutomu Kanno, et al.	:	DECISION ON REQUEST TO
Application No. 11/417,200	:	PARTICIPATE IN PATENT
Filed: May 4, 2006	:	PROSECUTION HIGHWAY
Attorney Docket No. 063979-0077	:	PILOT PROGRAM AND PETITION
	:	TO MAKE SPECIAL UNDER
	:	37 CFR 1.102(d)

This is a decision on the request to participate in the Patent Prosecution Highway (PPH) pilot program and the petition under 37 CFR 1.102(d), filed 03/03/2008, to make the above-identified application special.

The request and petition are **DISMISSED**.

A grantable request to participate in the PPH pilot program and petition to make special require:

(1) The U.S. application must validly claim priority under 35 U.S.C. 119(a) to one or more applications filed in the JPO;
(2) Applicant must submit a copy of the allowable/patentable claim(s) from the JPO application(s) along with an English translation thereof and a statement that the English translation is accurate;
(3) All the claims in the U.S. application must sufficiently correspond or be amended to sufficiently correspond to the allowable/patentable claim(s) in the JPO application(s);
(4) Examination of the U.S. application has not begun;
(5) Applicant must submit a copy of all the office actions from each of the JPO application(s) containing the allowable/patentable claim(s) along with an English translation thereof and a statement that the English translation is accurate;
(6) Applicant must submit an IDS listing the documents cited by the JPO examiner in the JPO office action along with copies of documents except U.S. patents or U.S. patent application publications; and
(7) The required petition fee under 37 CFR 1.17(h).

****

Conditions 1-3, and 5-7 above are considered to have been met. The request to participate in the PPH pilot program and petition, however fails to meet condition (4) above.

Regarding the requirement of condition (4), a review of the file reveals that an Office Action was mailed on March 3, 2008

CONCLUSION

For the above reasons, the "Request for Participation in the Patent Prosecution Highway (PPH) Pilot Program Between the JPO and the USPTO" filed March 3, 2008 is **DISMISSED** without prejudice.

Applicant is given a time period of **ONE MONTH or THIRTY DAYS**, whichever is longer, from the mailing date of this decision to correct the deficiencies. **NO EXTENSION OF TIME UNDER 37 CFR 1.136 IS PERMITTED.** If the deficiencies are not corrected with the time period given, the application will await action in its regular turn.

Response must be faxed to Michael Day at 571-272-1568.

Telephone inquiries concerning this decision should be directed to Michael Day at 571-272-1568.

All other inquiries concerning the examination or status of the application is accessible in the PAIR system at http://uspto.gov/ebc/index.html.

Michael Day
TQAS
Technology Center 2800- Semiconductors,
Electrical & Optical Systems & Components

UNITED STATES PATENT AND TRADEMARK OFFICE

UNITED STATES DEPARTMENT OF COMMERCE
United States Patent and Trademark Office
Address: COMMISSIONER FOR PATENTS
P.O. Box 1450
Alexandria, Virginia 22313-1450
www.uspto.gov

APPLICATION NO.	FILING DATE	FIRST NAMED INVENTOR	ATTORNEY DOCKET NO.	CONFIRMATION NO.
11/417,200	05/04/2006	Tsutomu Kanno	063979-0077	7732

7590 05/02/2008
McDERMOTT WILL & EMERY LLP
600 13th Street, N.W.
Washington, DC 20005-3096

EXAMINER
LE, DUNG ANH

ART UNIT	PAPER NUMBER
2818	

MAIL DATE	DELIVERY MODE
05/02/2008	PAPER

Please find below and/or attached an Office communication concerning this application or proceeding.

The time period for reply, if any, is set in the attached communication.

UNITED STATES PATENT AND TRADEMARK OFFICE

Commissioner for Patents
United States Patent and Trademark Office
P.O. Box 1450
Alexandria, VA 22313-1450
www.uspto.gov

McDERMOTT, WILL & EMEY LLP
600 Thirteenth Street, N.W.
Washington, DC 20005-3096

In re Application of	:	
Tsutomu Kanno, et al.	:	DECISION ON REQUEST TO
Application No. 11/417,200	:	PARTICIPATE IN PATENT
Filed: May 4, 2006	:	PROSECUTION HIGHWAY
Attorney Docket No. 063979-0077	:	PILOT PROGRAM AND PETITION
	:	TO MAKE SPECIAL UNDER
	:	37 CFR 1.102(d)

A decision dismissing the petition to make the above-identified application special for participation in the Patent Prosecution Highway (PPH) pilot program under 37 CFR 1.102(d), was mailed on March 13, 2008. The decision set a non-extendable time period of ONE MONTH or THIRTY DAYS, whichever is longer, from the mailing date to corrected deficiency/deficiencies in the petition.

As of April 28, 2008, neither a reply nor a renewed petition has been received. Accordingly, the application is no longer eligible for the Patent Prosecution Highway (PPH) program.

The application will remain in its regular status and will be taken up by the examiner for action in its regular turn.

Petitioner is reminded that a single opportunity to perfect the petition is given. Therefore, further petitions for participation in the Patent Prosecution Highway (PPH) pilot program in this application will not be entertained.

Response must be filed via the Electronic Filing System (EFS) with the Document Code PPH.PET.652.

Telephone inquiries concerning this decision should be directed to Michael Day at 571-272-1568.

All other inquiries concerning the examination or status of the application is accessible in the PAIR system at http://uspto.gov/ebc/index.html.

Michael Day
TQAS
Technology Center 2800- Semiconductors,
Electrical & Optical Systems & Components

UNITED STATES PATENT AND TRADEMARK OFFICE

UNITED STATES DEPARTMENT OF COMMERCE
United States Patent and Trademark Office
Address: COMMISSIONER FOR PATENTS
P.O. Box 1450
Alexandria, Virginia 22313-1450
www.uspto.gov

NIXON & VANDERHYE, PC
901 NORTH GLEBE ROAD, 11TH FLOOR
ARLINGTON, VA 22203

Mail Date: 04/21/2010

Applicant	: Petra Kressierer/Huber	: DECISION ON REQUEST FOR
Patent Number	: 7637288	: RECALCULATION of PATENT
Issue Date	: 12/29/2009	: TERM ADJUSTMENT IN VIEW
Appliction No	: 11/417,234	: OF WYETH AND NOTICE OF INTENT TO
Filed	: 05/04/2006	: ISSUE CERTIFICATE OF CORRECTION
		:

The Request for Recalculation is **GRANTED** to the extent indicated.

The patent term adjustment has been determined to be **0** days. The USPTO will *sua sponte* issue a certificate of correction reflecting the amount of PTA days determined by the recalculation.

Prior to the issuance of the certificate of correction, the USPTO will afford patentee an opportunity to be heard and request reconsideration. Accordingly, patentee has **one month or thirty (30) days**, whichever is longer, to file a request for reconsideration of this patent term adjustment calculation. See 35 U.S.C. 154(b)(3)(B)(ii) and 37 CFR 1.322(a)(4). No extensions of time will be granted under 37 CFR 1.136.

Patentee should use document code PET.OP if electronically filing a request for reconsideration of this patent term adjustment calculation. The patentee must also include the information required by 37 CFR 1.705(b)(2) and the fee required by 37 CFR 1.18(e). If patentee does not file a timely request for reconsideration of this patent term adjustment calculation including the information required by 37 CFR 1.705(b)(2) and the fee required by 37 CFR 1.18(e), the USPTO will issue a certificate of correction reflecting the PTA determination noted above.

Patentee should be aware that in order to preserve the right to review in the United States District Court for the District of Columbia of the USPTO patent term adjustment determination, patentee must ensure that he or she also take the steps required under 35 U.S.C. 154(b)(4)(A) in a timely manner. Nothing in the request for recalculation should be construed as providing an alternative time frame for commencing a civil action under 35 U.S.C. 154(b)(4)(A).

Any questions concerning this decision should be directed to the Office of Patent Legal Administration at 571-272-7702.

UNITED STATES PATENT AND TRADEMARK OFFICE

Commissioner for Patents
United States Patent and Trademark Office
P.O. Box 1450
Alexandria, VA 22313-1450
www.uspto.gov

Harness, Dickey & Pierce, P.L.C.
P.O. Box 8910
Reston, VA 20195

COPY MAILED

AUG 3 1 2007

OFFICE OF PETITIONS

In re Application of	:	
Morten Bryhn et al.	:	
Application No. 11/417,252	:	DECISION ON PETITION
Filed: May 4, 2006	:	TO WITHDRAW
Attorney Docket No. 10400C-000232/US	:	FROM RECORD
	:	

This is a decision on the Request to Withdraw as attorney or agent of record under 37 C.F.R. § 1.36(b), filed April 6, 2007.

The request is **NOT APPROVED** as moot.

A review of the file record indicates that the power of attorney to Harness, Dickey & Pierce, P.L.C. has been revoked by the assignee of the patent application on May 15, 2007. Accordingly, the request to withdraw under 37 C.F.R. § 1.36(b) is moot.

All future communications from the Office will continue to be directed to the below-listed address until otherwise notified by applicant.

Telephone inquires concerning this decision should be directed to Terri Williams at 571-272-2991.

T. Williams
Terri Williams
Petitions Examiner
Office of Petitions

cc: **Finnegan, Henderson, Farabow, Garrett & Dunner LLP**
901 New York Avenue, NW
Washington, DC 20001-4413

UNITED STATES PATENT AND TRADEMARK OFFICE

Commissioner for Patents
United States Patent and Trademark Office
P.O. Box 1450
Alexandria, VA 22313-1450
www.uspto.gov

FINNEGAN, HENDERSON, FARABOW,
GARRETT & DUNNER
LLP
901 NEW YORK AVENUE, NW
WASHINGTON DC 20001-4413

COPY MAILED

DEC 18 2009

OFFICE OF PETITIONS

In re Application of	:	
Bryhn et al.	:	
Patent Number: 7,550,613	:	
Issue Date: 06/23/2009	:	
Application No. 11/417252	:	ON REQUEST FOR
Filing or 371(c) Date: 05/04/2006	:	RECONSIDERATION OF
Attorney Docket Number: 10260.0005	:	PATENT TERM ADJUSTMENT

This is in response to the APPLICATION FOR PATENT TERM ADJUSTMENT-POST GRANT, filed July 27, 2009. Patentee requests that the determination of patent term adjustment be corrected from 32 days to 82 days. The petition is properly treated as an application for patent term adjustment under 37 CFR §1.705(d).

The application for patent term adjustment is **DISMISSED**.

On June 23, 2009, the above-identified application matured into U.S. Patent No. 7,550,613 with a patent term adjustment of 32 days. This application for patent term adjustment was timely filed within two months of the issue date of the patent. See 37 CFR 1.705(d).

Patentees request recalculation of the patent term adjustment in light of the ruling in Wyeth v. Dudas, 580 F. Supp. 2d 138, 88 U.S.P.Q. 2d 1538 (D.D.C. 2008). Patentees provide that under Wyeth, the period of patent term extension under 35 U.S.C. § 154(b)(1)(B) should be counted in addition to the 148 day USPTO delay under the 14 month delay provided by 35 U.S.C. § 154(b)(1)(A) and 4 month delay provided by 35 U.S.C. § 154(b)(1)(B) offset by 59 days of Applicant delay as provided by 35 U.S.C. § 154(b)(2)(C)(ii). Thus the total adjustment, Patentee avers, is 82 days (148 days + 50 days – 116 days[1])

The period of delay under § 154(b)(1)(B) is calculated based on the application having been filed under 35 U.S.C. 111(a) on May 4, 2006, and issuing on June 23, 2009, three (3) years and 50

[1] Patentees have failed to explicitly include in the application for patent term adjustment a reduction of 57 days attributed to Patentees pursuant to 37 CFR 1.704(c)(10) for filing an Amendment After Allowance on May 5, 2009, after the mailing of the Notice of Allowance on February 10, 2009. However, Patentees calculation implicitly includes the reduction as evidenced by Patentees' calculation of the total adjustment.

days later. Patentees assert that in addition to this 50-day period, they are entitled to a period of adjustment due to examination delay pursuant to 37 CFR 1.702(a) totalling 148 days.

Under 37 CFR 1.703(f), patentees are entitled to a period of patent term adjustment equal to the period of delays based on the grounds set forth in 37 CFR 1.702 reduced by the period of time equal to the period of time during which patentees failed to engage in reasonable efforts to conclude prosecution pursuant to 37 CFR 1.704. In other words, patentees are entitled to the period of Office delay reduced by the period of applicant delay.

The Office agrees that as of the issuance of the patent on June 23, 2009, the application was pending three years and 50 days after its filing date. The Office agrees that certain action was not taken within the specified time frame, and thus, the entry of a period of adjustment of 148 days is correct. At issue is whether patentees should accrue 50 days of patent term adjustment for the Office taking in excess of three years to issue the patent, as well as 148 days for Office failure to take a certain action within a specified time frame (or examination delay).

The Office contends that the period of 50 days of delay in issuance of the patent overlaps with the period of 148 days of examination delay. Patentees' calculation of the period of overlap is inconsistent with the Office's interpretation of this provision. 35 U.S.C. 154(b)(2)(A) limits the adjustment of patent term, as follows:

> To the extent that the periods of delay attributable to grounds specified in paragraph (1) overlap, the period of any adjustment granted under this subsection shall not exceed the actual number of days the issuance of the patent was delayed.

Likewise, 35 CFR 1.703(f) provides that:

> To the extent that periods of delay attributable to the grounds specified in § 1.702 overlap, the period of adjustment granted under this section shall not exceed the actual number of days the issuance of the patent was delayed.

As explained in *Explanation of 37 CFR 1.703(f) and of the United States Patent and Trademark Office Interpretation of 35 U.S.C. 154(b)(2)(A)*, 69 Fed. Reg. 34283 (June 21, 2004), the Office interprets 35 U.S.C. 154(b)(2)(A) as permitting either patent term adjustment under 35 U.S.C. 154(b)(1)(A)(i)-(iv), or patent term adjustment under 35 U.S.C. 154(b)(1)(B), but not as permitting patent term adjustment under both 35 U.S.C. 154(b)(1)(A)(i)-(iv) and 154(b)(1)(B). Accordingly, the Office implements the overlap provision as follows:

> If an application is entitled to an adjustment under 35 U.S.C. 154(b)(1)(B), the entire period during which the application was pending (except for periods excluded under 35 U.S.C. 154(b)(1)(B)(i)-(iii)), and not just the period beginning three years after the actual filing date of the application, is the period of delay under 35 U.S.C. 154(b)(1)(B) in determining whether periods of delay overlap under 35 U.S.C. 154(b)(2)(A). Thus, any

> days of delay for Office issuance of the patent more than 3 years after the filing date of the application, which overlap with the days of patent term adjustment accorded prior to the issuance of the patent will not result in any additional patent term adjustment. See 35 U.S.C. 154(b)(1)(B), 35 U.S.C. 154(b)(2)(A), and 37 CFR § 1.703(f). See *Changes to Implement Patent Term Adjustment Under Twenty Year Term; Final Rule*, 65 Fed. Reg. 56366 (Sept. 18, 2000). See also *Revision of Patent Term Extension and Patent Term Adjustment Provisions; Final Rule*, 69 Fed. Reg. 21704 (April 22, 2004), 1282 Off. Gaz. Pat. Office 100 (May 18, 2004). See also *Explanation of 37 CFR 1.703(f) and of the United States Patent and Trademark Office Interpretation of 35 U.S.C. 154(b)(2)(A)*, 69 Fed. Reg. 34283 (June 21, 2004).

The current wording of § 1.703(f) was revised in response to the misinterpretation of this provision by a number of Patentees. The rule was slightly revised to more closely track the corresponding language of 35 U.S.C. 154(b)(2)(A). The relevant portion differs only to the extent that the statute refers back to provisions of the statute whereas the rule refers back to sections of the rule. This was not a substantive change to the rule nor did it reflect a change of the Office's interpretation of 35 U.S.C. 154(b)(2)(A). As stated in the *Explanation of 37 CFR 1.703(f) and of the United States Patent and Trademark Office Interpretation of 35 U.S.C. 154(b)(2)(A)*, the Office has consistently taken the position that if an application is entitled to an adjustment under the three-year pendency provision of 35 U.S.C. 154(b)(1)(B), the entire period during which the application was pending before the Office (except for periods excluded under 35 U.S.C. 154(b)(1)(B)(i)-(iii)), and not just the period beginning three years after the actual filing date of the application, is the relevant period under 35 U.S.C. 154(b)(1)(B) in determining whether periods of delay "overlap" under 35 U.S.C. 154(b)(2)(A).

This interpretation is consistent with the statute. Taken together the statute and rule provide that to the extent that periods of delay attributable to grounds specified in 35 U.S.C. 154(b)(1) and in corresponding § 1.702 overlap, the period of adjustment granted shall not exceed the actual number of days the issuance of the patent was delayed. The grounds specified in these sections cover the A) guarantee of prompt Patent and Trademark Office responses, B) guarantee of no more than 3-year application pendency, and C) guarantee or adjustments for delays due to interference, secrecy orders and appeals. A section by section analysis of 35 U.S.C. 154(b)(2)(A) specifically provides that:

> Section 4402 imposes limitations on restoration of term. In general, pursuant to [35 U.S.C.] 154(b)(2)(A)-(C), total adjustments granted for restorations under [35 U.S.C. 154](b)(1) are reduced as follows: (1) To the extent that there are multiple grounds for extending the term of a patent that may exist simultaneously (e.g., delay due to a secrecy order under [35 U.S.C.] 181 and administrative delay under [35 U.S.C.] 154(b)(1)(A)), the term should not be extended for each ground of delay but only for the actual number of days that the issuance of a patent was delayed; See 145 Cong. Rec. S14,718[2]

[2] The AIPA is title IV of the Intellectual Property and Communications Omnibus Reform Act of 1999 (S. 1948), which was incorporated and enacted as law as part of Pub. L. 106-113. The Conference Report for H.R. 3194, 106th Cong. 1st Sess. (1999), which resulted in Pub. L. 106-113, does not contain any discussion (other than the incorporated language) of S. 1948. A section-

As such, the period for over three-year pendency does not overlap only to the extent that the actual dates in the period beginning three years after the date on which the application was filed overlap with the actual dates in the periods for failure of the Office to take action within specified time frames. In other words, consideration of the overlap does not begin three years after the filing date of the application.

In this instance, the relevant period under 35 U.S.C. 154(b)(1)(B) in determining whether periods of delay "overlap" under 35 U.S.C. 154(b)(2)(A) is the entire period during which the application was pending before the Office, May 4, 2006, to the date the patent issued on June 23, 2009. Prior to the issuance of the patent, 148 days of patent term adjustment were accorded for the Office failing to respond within a specified time frame during the pendency of the application. All of the 50 days of Office delay in issuing the patent overlap with the 148 days of Office examination delay. During that time, the issuance of the patent was delayed by 148 days, not 148 days and 50 days. The Office took 14 months and 148 days to issue a first Office action. Otherwise, the Office took all actions set forth in 37 CFR 1.702(a) within the prescribed timeframes. Nonetheless, given the initial 148 days of Office delay and the time allowed within the time frames for processing and examination, the application issued three years and 50 days after its filing date. However, the Office did not delay 148 days and also delay an additional 50 days. Accordingly, 148 days of patent term adjustment was properly entered because the period of delay of 50 days attributable to the delay in the issuance of the patent overlaps with the adjustment of 148 days attributable to grounds specified in § 1.702(a), and at issuance. Entry of both periods is not warranted.

In view thereof, no adjustment to the patent term will be made.

The Office acknowledges submission of the $200.00 fee set forth in 37 CFR 1.18(e). No additional fees are required.

Telephone inquiries specific to this matter should be directed to Attorney Derek Woods, at (571) 272-3232.

/ALESIA M. BROWN/

Alesia M. Brown
Senior Petitions Attorney
Office of Petitions
Office of the Deputy Commissioner
for Patent Examination Policy

---

by-section analysis of S. 1948, however, was printed in the Congressional Record at the request of Senator Lott, See 145 Cong. Rec. S14,708-26 (1999)(daily ed. Nov. 17, 1999).

UNITED STATES PATENT AND TRADEMARK OFFICE

UNITED STATES DEPARTMENT OF COMMERCE
United States Patent and Trademark Office
Address: COMMISSIONER FOR PATENTS
P.O. Box 1450
Alexandria, Virginia 22313-1450
www.uspto.gov

FINNEGAN, HENDERSON, FARABOW, GARRETT & DUNNER LLP
901 NEW YORK AVENUE, NW
WASHINGTON, DC 20001-4413

Mail Date: 04/21/2010

Applicant	: Morten Bryhn	: DECISION ON REQUEST FOR
Patent Number	: 7550613	: RECALCULATION of PATENT
Issue Date	: 06/23/2009	: TERM ADJUSTMENT IN VIEW
Appliction No	: 11/417,252	: OF WYETH AND NOTICE OF INTENT TO
Filed	: 05/04/2006	: ISSUE CERTIFICATE OF CORRECTION
		:

The Request for Recalculation is **GRANTED** to the extent indicated.

The patent term adjustment has been determined to be **33** days. The USPTO will *sua sponte* issue a certificate of correction reflecting the amount of PTA days determined by the recalculation.

Prior to the issuance of the certificate of correction, the USPTO will afford patentee an opportunity to be heard and request reconsideration. Accordingly, patentee has **one month or thirty (30) days**, whichever is longer, to file a request for reconsideration of this patent term adjustment calculation. See 35 U.S.C. 154(b)(3)(B)(ii) and 37 CFR 1.322(a)(4). No extensions of time will be granted under 37 CFR 1.136.

Patentee should use document code PET.OP if electronically filing a request for reconsideration of this patent term adjustment calculation. The patentee must also include the information required by 37 CFR 1.705(b)(2) and the fee required by 37 CFR 1.18(e). If patentee does not file a timely request for reconsideration of this patent term adjustment calculation including the information required by 37 CFR 1.705(b)(2) and the fee required by 37 CFR 1.18(e), the USPTO will issue a certificate of correction reflecting the PTA determination noted above.

Patentee should be aware that in order to preserve the right to review in the United States District Court for the District of Columbia of the USPTO patent term adjustment determination, patentee must ensure that he or she also take the steps required under 35 U.S.C. 154(b)(4)(A) in a timely manner. Nothing in the request for recalculation should be construed as providing an alternative time frame for commencing a civil action under 35 U.S.C. 154(b)(4)(A).

Any questions concerning this decision should be directed to the Office of Patent Legal Administration at 571-272-7702.

UNITED STATES PATENT AND TRADEMARK OFFICE

UNITED STATES DEPARTMENT OF COMMERCE
United States Patent and Trademark Office
Address: COMMISSIONER FOR PATENTS
P.O. Box 1450
Alexandria, Virginia 22313-1450
www.uspto.gov

FINNEGAN, HENDERSON, FARABOW, GARRETT & DUNNER LLP
901 NEW YORK AVENUE, NW
WASHINGTON, DC 20001-4413

Mail Date: 05/18/2010

Applicant : Morten Bryhn
Patent Number : 7550613
Issue Date : 06/23/2009
Application No : 11/417,252
Filed : 05/04/2006

: NOTICE CONCERNING IMPROPER
: CALCULATION OF PATENT TERM
: ADJUSTMENT BASED UPON USPTO
: IMPROPERLY MEASURING REDUCTION
: PERIOD UNDER 37 CFR 1.704(c)(10).

The United States Patent and Trademark Office (USPTO) discovered that in processing the recent recalculation decisions mailed in response to patentee's filed Request for Recalculation of Patent Term Adjustment in view of Wyeth, the USPTO improperly measured the reduction period for reductions under 37 CFR 1.704(c)(10). Pursuant to 37 CFR 1.704(c)(10), patentee's reduction begins on the date of filing the amendment under 37 CFR 1.312 ("1.312 amendment") or other related paper and ends on the date that the Office mails a response to the filing of the 1.312 amendment or other paper. It has been discovered that during the recalculation, the calculation failed to the limit the reduction to the mail date of the response to the 1.312 amendment or other paper. Accordingly, patentee's reductions were greater than warranted.

This notice **VACATES** the previous GRANTED request for recalculation and provides patentee with a revised GRANTED recalculation.

The patent term adjustment has been determined to be **82** days. The USPTO will *sua sponte* issue a certificate of correction reflecting the amount of patent term adjustment (PTA) days determined by the recalculation.

Prior to the issuance of the certificate of correction, the USPTO will afford patentee an opportunity to be heard and request reconsideration. Accordingly, patentee has **one month or thirty (30) days** from the mail date of this notice, whichever is longer, to file a request for reconsideration of this PTA calculation. See 35 U.S.C. § 154(b)(3)(B)(ii) and 37 CFR 1.322(a)(4).

Patentee should use document code PET.OP if electronically filing a request for reconsideration of this PTA calculation. The patentee must also include the information required by 37 CFR 1.705(b)(2), and the fee required by 37 CFR 1.18(e). If patentee does not file a timely request for reconsideration of this PTA calculation, including the information required by 37 CFR 1.705(b)(2) and the fee required by 37 CFR 1.18(e), the USPTO will issue a certificate of correction reflecting the PTA determination noted above.

Patentee should be aware that in order to preserve the right of review of the USPTO's PTA determination in the United States District Court for the District of Columbia, patentee must ensure that the steps required under 35 U.S.C. § 154 (b)(4) are taken in a timely manner. Nothing in the request for recalculation should be construed as providing an alternative time frame for commencing a civil action under 35 U.S.C. § 154(b)(4).

UNITED STATES PATENT AND TRADEMARK OFFICE

Commissioner for Patents
United States Patent and Trademark Office
P.O. Box 1450
Alexandria, VA 22313-1450
www.uspto.gov

ARENT FOX LLP
1050 CONNECTICUT AVENUE, N.W.
SUITE 400
WASHINGTON DC 20036

COPY MAILED

FEB 03 2009

OFFICE OF PETITIONS

In re Application of	:	
Bressner et al.	:	
Application No. 11/417,260	:	DECISION ON PETITION
Filed: May 4, 2006	:	
Attorney Docket No. 027483-00005	:	

This is a decision on the petition under the unintentional provisions of 37 CFR 1.137(b), filed September 25, 2008, to revive the above-identified application.

The petition is **GRANTED**.

The application became abandoned for failure to reply in a proper and timely manner to the Notice to File Missing Parts of Nonprovisional Application (Notice), mailed June 5, 2006. The Notice set a period for reply of two (2) months from the mail date of the Notice. No extensions of time under the provisions of 37 CFR 1.136(a) were obtained. Accordingly, the application became abandoned on August 6, 2006. A Notice of Abandonment was mailed February 7, 2007.

The petition satisfies the requirements of 37 CFR 1.137(b) in that petitioner has supplied (1) the reply in the form of an Oath/Declaration and $65.00 surcharge fee, the Statutory basic filing fee of $155.00, the Search fee of $255.00, the Examination fee of $105.00, the Additional Claims fee of $525.00 and Replacement drawings, (2) the petition fee of $770.00, and (3) a proper statement of unintentional delay.

The above-identified application has been abandoned for an extended period of time. The Patent and Trademark Office is relying on petitioner's duty of candor and good faith and accepting the statement that the entire delay in filing the required reply from the due date for the reply until the filing of a grantable petition pursuant to 37 CFR 1.137(b) was unintentional.[1]

Telephone inquiries concerning this decision should be directed to Joan Olszewski at (571) 272-7751.

This application is being referred to the Office of Patent Application Processing for further processing in accordance with this decision on petition.

/Liana Walsh/
Liana Walsh
Petitioner Examiner
Office of Petitions

---

[1] See Changes to Patent Practice and Procedure, 62 Fed. Reg. at 53160 and 53178; 1203 Off. Gaz. Pat. Office at 88 and 103 (responses to comments 64 and 109) (applicant obligated under 37 CFR 10.18 to inquire into the underlying facts and circumstances when providing the statement required by 37 CFR 1.137(b) to the Patent and Trademark Office).

UNITED STATES PATENT AND TRADEMARK OFFICE

COMMISSIONER FOR PATENTS
UNITED STATES PATENT AND TRADEMARK OFFICE
P.O. BOX 1450
ALEXANDRIA, VA 22313-1450
WWW.USPTO.GOV

Paper No. None

FOLEY & LARDNER LLP
150 EAST GILMAN STREET
P.O. BOX 1497
MADISON WI 53701-1497

COPY MAILED

DEC 18 2006

OFFICE OF PETITIONS

In re Application of :
Brian Rasnow and Chuck Li :
Application No. 11/417,271 :
Filed: May 3, 2006 :
Attorney Docket No. 072197-0103 :
Title: ROBOTIC GRIPPER FOR :
TRANSPORTING MULTIPLE OBJECT :
TYPES :

DECISION ON PETITION UNDER 37 C.F.R. §1.47(A)

This is in response to the petition under 37 C.F.R. §1.47(a)[1], filed October 4, 2006.

On May 3, 2006, the application was filed, identifying Brian Rasnow, Chuck Li, and Stephen Robert Wilson as joint inventors. The application was deposited without an oath or declaration. On June 2, 2006, a "Notice to File Missing Parts of Nonprovisional Application - Filing Date Granted" (Notice) was mailed, notifying

1 A grantable petition under 37 C.F.R. §1.47(a) requires:
(1) the petition fee of $200;
(2) a surcharge of either $65 or $130, if the petition is not filed at the time of filing the application, as set forth in 37 CFR § 1.16(f);
(3) a statement of the last known address of the non-signing inventor;
(4) proof that either:
a) a copy of the entire application (specification, claims, drawings, and the oath or declaration) was sent or given to the non-signing inventor for review and proof that the non-signing inventor refuses to join in the application, or
b) the non-signing inventor cannot be found or reached after diligent effort, and a statement that these efforts were not successful;
(5) a declaration which complies with 37 CFR §1.63.

applicant that a fully executed oath or declaration and the associated surcharge were required, along with the basic filing fee, replacement drawings, and fees associated with the filing of additional claims. This Notice set a two-month period for reply.

With the present petition, Petitioner has submitted the petition fee, the surcharge associated with the late submission of an oath or declaration, the examination fee, fees associated with the filing of additional claims, the search fee, the filing fee, drawings, and a two-month extension of time to make timely this response. Petitioner has further included a declaration which has been executed by Messrs. Rasnow and Li.

It is noted that Mr. Wilson is not listed as a joint inventor on the declaration. Pursuant to 37 C.F.R. §1.48(f)(1), inventorship is set by the first submission of an executed declaration.

Office records have been corrected so that Mr. Wilson is no longer listed as an inventor associated with this application. A corrected filing receipt has been enclosed.

It follows that the present petition must be **DISMISSED**.

Any reply must be submitted within **TWO MONTHS** from the mail date of this decision. Extensions of time under 37 C.F.R. §1.136(a) are permitted. The reply should include a cover letter entitled "Renewed Petition Under 37 C.F.R. 1.47(a)". This is not a final agency action within the meaning of 5 U.S.C 704.

The renewed petition should indicate in a prominent manner that the attorney handling this matter is Paul Shanoski, and may be submitted by mail[2], hand-delivery[3], or facsimile[4].

It appears as though Mr. Wilson should have been listed on the declaration. Petitioner should consider submitting a renewed petition, along with petitions under 37 C.F.R. §§1.48(a) to add Mr. Wilson and 1.183 to waive 1.48(a)(2). Petitioner will also need to submit a new declaration, as the declaration submitted with this petition does not comply with 37 C.F.R. §1.63(a)(2), in that the non-signing joint inventor is not listed as an inventor on the declaration. As set forth in MPEP 409.03(a):

---

2 Mail Stop Petition, Commissioner for Patents, United States Patent and Trademark Office, P.O. Box 1450, Alexandria, VA, 22313-1450.
3 Customer Window, Randolph Building, 401 Dulaney Street, Alexandria, VA, 22314.
4 (571) 273-8300- please note this is a central facsimile number.

> A) All the available joint inventors must (1) make oath or declaration on their own behalf as required by 37 CFR 1.63 or 1.175 (see MPEP § 602, § 605.01, and § 1414) and (2) make oath or declaration on behalf of the nonsigning joint inventor as required by 37 CFR 1.64. An oath or declaration signed by all the available joint inventors with the signature block of the nonsigning inventor(s) left blank may be treated as having been signed by all the available joint inventors on behalf of the nonsigning inventor(s), unless otherwise indicated (emphasis added).

If responding by mail, Petitioner is advised not to place the undersigned's name on the envelope. Only the information that appears in the footnote should be included - adding anything else to the address will delay the delivery of the response to the undersigned.

Telephone inquiries regarding *this decision* should be directed to the undersigned at (571) 272-3225[5]. All other inquiries concerning examination procedures or status of the application should be directed to the Technology Center.

Paul Shanoski
Senior Attorney
Office of Petitions
United States Patent and Trademark Office

---

5 Petitioner will note that all practice before the Office should be in writing, and the action of the Office will be based exclusively on the written record in the Office. See 37 C.F.R. §1.2. As such, Petitioner is reminded that no telephone discussion may be controlling or considered authority for Petitioner's further action(s).

UNITED STATES PATENT AND TRADEMARK OFFICE

UNITED STATES DEPARTMENT OF COMMERCE
United States Patent and Trademark Office
Address: COMMISSIONER FOR PATENTS
P.O. Box 1450
Alexandria, Virginia 22313-1450
www.uspto.gov

APPL NO.	FILING OR 371 (c) DATE	ART UNIT	FIL FEE REC'D	ATTY.DOCKET NO	DRAWINGS	TOT CLMS	IND CLMS
11/417,271	05/03/2006	1743	1880	072197-0103	13	31	4

CONFIRMATION NO. 6486

CORRECTED FILING RECEIPT

OC000000021596413

23524
FOLEY & LARDNER LLP
150 EAST GILMAN STREET
P.O. BOX 1497
MADISON, WI 53701-1497

Date Mailed: 12/13/2006

Receipt is acknowledged of this regular Patent Application. It will be considered in its order and you will be notified as to the results of the examination. Be sure to provide the U.S. APPLICATION NUMBER, FILING DATE, NAME OF APPLICANT, and TITLE OF INVENTION when inquiring about this application. Fees transmitted by check or draft are subject to collection. Please verify the accuracy of the data presented on this receipt. **If an error is noted on this Filing Receipt, please mail to the Commissioner for Patents P.O. Box 1450 Alexandria Va 22313-1450. Please provide a copy of this Filing Receipt with the changes noted thereon. If you received a "Notice to File Missing Parts" for this application, please submit any corrections to this Filing Receipt with your reply to the Notice. When the USPTO processes the reply to the Notice, the USPTO will generate another Filing Receipt incorporating the requested corrections (if appropriate).**

Applicant(s)

Brian Rasnow, Newbury Park, CA;
Chuck Li, Thousand Oaks, CA;

Power of Attorney: The patent practitioners associated with Customer Number **21069**.

Domestic Priority data as claimed by applicant

Foreign Applications

If Required, Foreign Filing License Granted: 06/01/2006

The country code and number of your priority application, to be used for filing abroad under the Paris Convention, is US11/417,271

Projected Publication Date: 11/08/2007

Non-Publication Request: No

Early Publication Request: No

Title

Robotic gripper for transporting multiple object types

Preliminary Class

422

PROTECTING YOUR INVENTION OUTSIDE THE UNITED STATES

Since the rights granted by a U.S. patent extend only throughout the territory of the United States and have no effect in a foreign country, an inventor who wishes patent protection in another country must apply for a patent in a specific country or in regional patent offices. Applicants may wish to consider the filing of an international application under the Patent Cooperation Treaty (PCT). An international (PCT) application generally has the same effect as a regular national patent application in each PCT-member country. The PCT process **simplifies** the filing of patent applications on the same invention in member countries, but **does not result** in a grant of "an international patent" and does not eliminate the need of applicants to file additional documents and fees in countries where patent protection is desired.

Almost every country has its own patent law, and a person desiring a patent in a particular country must make an application for patent in that country in accordance with its particular laws. Since the laws of many countries differ in various respects from the patent law of the United States, applicants are advised to seek guidance from specific foreign countries to ensure that patent rights are not lost prematurely.

Applicants also are advised that in the case of inventions made in the United States, the Director of the USPTO must issue a license before applicants can apply for a patent in a foreign country. The filing of a U.S. patent application serves as a request for a foreign filing license. The application's filing receipt contains further information and guidance as to the status of applicant's license for foreign filing.

Applicants may wish to consult the USPTO booklet, "General Information Concerning Patents" (specifically, the section entitled "Treaties and Foreign Patents") for more information on timeframes and deadlines for filing foreign patent applications. The guide is available either by contacting the USPTO Contact Center at 800-786-9199, or it can be viewed on the USPTO website at http://www.uspto.gov/web/offices/pac/doc/general/index.html.

For information on preventing theft of your intellectual property (patents, trademarks and copyrights), you may wish to consult the U.S. Government website, http://www.stopfakes.gov. Part of a Department of Commerce initiative, this website includes self-help "toolkits" giving innovators guidance on how to protect intellectual property in specific countries such as China, Korea and Mexico. For questions regarding patent enforcement issues, applicants may call the U.S. Government hotline at 1-866-999-HALT (1-866-999-4158).

LICENSE FOR FOREIGN FILING UNDER
Title 35, United States Code, Section 184
Title 37, Code of Federal Regulations, 5.11 & 5.15

GRANTED

The applicant has been granted a license under 35 U.S.C. 184, if the phrase "IF REQUIRED, FOREIGN FILING LICENSE GRANTED" followed by a date appears on this form. Such licenses are issued in all applications where the conditions for issuance of a license have been met, regardless of whether or not a license may be required as set forth in 37 CFR 5.15. The scope and limitations of this license are set forth in 37 CFR 5.15(a) unless an earlier license has been issued under 37 CFR 5.15(b). The license is subject to revocation upon written notification. The date indicated is the effective date of the license, unless an earlier license of similar scope has been granted under 37 CFR 5.13 or 5.14.

This license is to be retained by the licensee and may be used at any time on or after the effective date thereof unless it is revoked. This license is automatically transferred to any related applications(s) filed under 37 CFR 1.53(d). This license is not retroactive.

The grant of a license does not in any way lessen the responsibility of a licensee for the security of the subject matter as imposed by any Government contract or the provisions of existing laws relating to espionage and the national security or the export of technical data. Licensees should apprise themselves of current regulations especially with respect to certain countries, of other agencies, particularly the Office of Defense Trade Controls, Department of State (with respect to Arms, Munitions and Implements of War (22 CFR 121-128)); the Bureau of Industry and Security, Department of Commerce (15 CFR parts 730-774); the Office of Foreign Assets Control, Department of Treasury (31 CFR Parts 500+) and the Department of Energy.

NOT GRANTED

No license under 35 U.S.C. 184 has been granted at this time, if the phrase "IF REQUIRED, FOREIGN FILING LICENSE GRANTED" DOES NOT appear on this form. Applicant may still petition for a license under 37 CFR 5.12, if a license is desired before the expiration of 6 months from the filing date of the application. If 6 months has lapsed from the filing date of this application and the licensee has not received any indication of a secrecy order under 35 U.S.C. 181, the licensee may foreign file the application pursuant to 37 CFR 5.15(b).

UNITED STATES PATENT AND TRADEMARK OFFICE

COMMISSIONER FOR PATENTS
UNITED STATES PATENT AND TRADEMARK OFFICE
P.O. BOX 1450
ALEXANDRIA, VA 22313-1450
WWW.USPTO.GOV

Paper No. None

COPY MAILED

JUN 25 2007

OFFICE OF PETITIONS

FOLEY & LARDNER LLP
150 EAST GILMAN STREET
P.O. BOX 1497
MADISON WI 53701-1497

In re Application of Brian Rasnow, Chuck Li, and Stephen Robert Wilson Application No. 11/417,271 Filed: May 3, 2006 Attorney Docket No. 072197-0103 Title: ROBOTIC GRIPPER FOR TRANSPORTING MULTIPLE OBJECT TYPES	DECISION ON RENEWED PETITION PURSUANT TO 37 C.F.R. § 1.47(A) and TWO PETITIONS PURSUANT TO §§1.183 and 1.48(A)

This is in response to the renewed petition pursuant to 37 C.F.R. §1.47(a)[1]. This is also a decision on the petition pursuant to Rule § 1.48(a) to add an inventor, and the petition pursuant to Rule § 1.183, requesting waiver of the requirements of 37 C.F.R. §1.48(a)(2) so that a person can be added as an inventor without having first obtained a statement from this

1 A grantable petition under 37 C.F.R. §1.47(a) requires:
(1) the petition fee of $200;
(2) a surcharge of either $65 or $130, if the petition is not filed at the time of filing the application, as set forth in 37 CFR § 1.16(f);
(3) a statement of the last known address of the non-signing inventor;
(4) proof that either:
a) a copy of the entire application (specification, claims, drawings, and the oath or declaration) was sent or given to the non-signing inventor for review and proof that the non-signing inventor refuses to join in the application, or
b) the non-signing inventor cannot be found or reached after diligent effort, and a statement that these efforts were not successful;
(5) a declaration which complies with 37 CFR §1.63.

individual, attesting to the fact that the error in inventorship occurred without deceptive intention on his part. Each of these three petitions was filed concurrently on February 22, 2007.

On May 3, 2006, the application was filed, identifying Brian Rasnow, Chuck Li, and Stephen Robert Wilson as joint inventors. The application was deposited without an oath or declaration. On June 2, 2006, a "Notice to File Missing Parts of Nonprovisional Application - Filing Date Granted" (Notice) was mailed, requiring applicant to provide, *inter alia*, a fully executed oath or declaration and the associated surcharge. This Notice set a two-month period for reply.

With an original petition pursuant to Rule §1.47(a), filed on October 4, 2006, Petitioner submitted, *inter alia*, the petition fee, the surcharge associated with the late submission of an oath or declaration, and a two-month extension of time to make timely this response. Petitioner further included a declaration that had been executed by Messrs. Rasnow and Li.

The original petition pursuant to Rule §1.47(a) was dismissed via the mailing of a decision on December 18, 2006. It is noted that the present submission contains a certificate of mailing dated February 20, 2007. It is further noted that February 18, 2007 fell on a Sunday, and February 19, 2007 was a federal holiday.

The petition pursuant to 37 C.F.R. §1.183:

Regarding the petition under 37 C.F.R. 1.183, Petitioner has requested that the requirements of 37 C.F.R. §1.48 (a)(2) be waived. 37 C.F.R. §1.48 (a)(2) requires the submission of a statement from each person being deleted as an inventor that the error in inventorship occurred without deceptive intention on his or her part. Petitioner wishes to add Stephen Robert Wilson as an inventive entity (Mr. Wilson was originally listed as an inventive entity, but was removed pursuant to Rule §1.48(f)(1)[2].

With the original petition pursuant to Rule §1.47(a), Petitioner asserted that Mr. Wilson had refused to execute the declaration after the legal representative of his current employer had been provided with a complete copy of the application.

2 See decision on original petition, page 2.

Petitioner has further included a corrected declaration that corrects the errors present in the declaration that was presented with the original petition pursuant to Rule §1.47(a).

Petitioner has established the existence of an extraordinary situation, where justice requires the waiver of Rule §1.48(a)(2).

Consequently, **the petition pursuant to 37 C.F.R. §1.183 is hereby GRANTED**, and Rule §1.48(a)(2) is waived as it applies to Mr. Wilson.

The petition pursuant to 37 C.F.R. §1.48:

Petitioner has submitted a renewed request to correct the inventorship that sets forth the desired inventorship change, the processing fee set forth in Rule §1.17(i), and the written consent of the assignee. Petitioner has requested that Mr. Wilson be added as an inventive entity.

Petitioner has met each of the requirements of Rule §1.48 but for Rule §1.48(a)(2) in that a statement has not been provided from Mr. Wilson. However, pursuant to the discussion above, this requirement has been waived as it applies to this individual.

Consequently, **the petition pursuant to 37 C.F.R. §1.48 is hereby GRANTED.**

Office records have been updated to reflect the change in inventorship. A corrected filing receipt has been enclosed with this decision.

The petition pursuant to 37 C.F.R. §1.47(a):

Petitioner has established that a complete copy of the application was sent to the legal representative of the non-signing inventor's current employer, and that the non-signing inventor has refused to execute the declaration.

Petitioner has met each of the five requirements of Rule §1.47(a), and has submitted all required fees. Therefore, the **petition pursuant to Rule §1.47(a) is GRANTED** and this application is hereby accorded Rule §1.47(a) status.

As provided in Rule §1.47(a), this Office will forward notice of this application's filing to the non-signing inventor at the address given on the declaration. Notice of the filing of this application will also be published in the Official Gazette.

The Office of Initial Patent Examination (OIPE) will be notified of this decision so that the application may receive further processing.

The general phone number for OIPE is 571-272-4000. Telephone inquiries regarding this decision should be directed to the undersigned at (571) 272-3225.

Paul Shanoski
Senior Attorney
Office of Petitions
United States Patent and Trademark Office

Encl. Corrected Filing Receipt

UNITED STATES PATENT AND TRADEMARK OFFICE

COMMISSIONER FOR PATENTS
UNITED STATES PATENT AND TRADEMARK OFFICE
P.O. BOX 1450
ALEXANDRIA, VA 22313-1450
WWW.USPTO.GOV

Stephen Robert Wilson
40 Maitland St.
Glen Iris
Victoria 3146
AUSTRALIA

COPY MAILED

JUN 25 2007

OFFICE OF PETITIONS

In re Application of	:	
Brian Rasnow, Chuck Li, and	:	
Stephen Robert Wilson		
Application No. 11/417,271	:	
Filed: May 3, 2006	:	LETTER
Attorney Docket No. 072197-0103	:	
Title: ROBOTIC GRIPPER FOR	:	
TRANSPORTING MULTIPLE OBJECT	:	
TYPES	:	

Dear Mr. Wilson:

You are named a joint inventor in the above-identified United States patent application filed under the provisions of 35 U.S.C. 116 (United States Code) and 37 C.F.R. §1.47(a), Rules of Practice in Patent Cases. Should a patent be granted on the application, you will be designated therein as a joint inventor.

As a named inventor you are entitled to inspect any paper in the file wrapper of the application, order copies of all or any part thereof (at a prepaid cost per 37 C.F.R. §1.19) or make your position of record in the application. Alternatively, you may arrange to do any of the preceding through a registered patent attorney or agent presenting written authorization from you. If you care to join the application, the attorney of record below would presumably assist you. Joining in the application would entail the filing of an appropriate oath or declaration by you pursuant to 37 C.F.R. §1.63.

Telephone inquiries regarding this communication should be directed to the undersigned at (571) 272-3225. Requests for information regarding your application should be directed to the File Information Unit at (703) 308-2733. Information regarding how to pay for and order a copy of the application, or a specific paper in the application should be directed to the Certification Division at (703) 308-9726 or 1-800-972-6382 (outside the Washington D.C. area).

Paul Shanoski
Senior Attorney
Office of Petitions
United States Patent and Trademark Office

cc: FOLEY & LARDNER LLP
150 EAST GILMAN STREET
P.O. BOX 1497
MADISON WI 53701-1497

UNITED STATES PATENT AND TRADEMARK OFFICE

UNITED STATES DEPARTMENT OF COMMERCE
United States Patent and Trademark Office
Address: COMMISSIONER FOR PATENTS
P.O. Box 1450
Alexandria, Virginia 22313-1450
www.uspto.gov

APPL NO.	FILING OR 371(c) DATE	ART UNIT	FIL FEE REC'D	ATTY.DOCKET NO	TOT CLMS	IND CLMS
11/417,271	05/03/2006	1743	1880	072197-0103	31	4

CONFIRMATION NO. 6486

CORRECTED FILING RECEIPT

OC000000024484720

23524
FOLEY & LARDNER LLP
150 EAST GILMAN STREET
P.O. BOX 1497
MADISON, WI 53701-1497

Date Mailed: 06/22/2007

Receipt is acknowledged of this regular Patent Application. It will be considered in its order and you will be notified as to the results of the examination. Be sure to provide the U.S. APPLICATION NUMBER, FILING DATE, NAME OF APPLICANT, and TITLE OF INVENTION when inquiring about this application. Fees transmitted by check or draft are subject to collection. Please verify the accuracy of the data presented on this receipt. **If an error is noted on this Filing Receipt, please mail to the Commissioner for Patents P.O. Box 1450 Alexandria Va 22313-1450. Please provide a copy of this Filing Receipt with the changes noted thereon. If you received a "Notice to File Missing Parts" for this application, please submit any corrections to this Filing Receipt with your reply to the Notice. When the USPTO processes the reply to the Notice, the USPTO will generate another Filing Receipt incorporating the requested corrections (if appropriate).**

Applicant(s)

Brian Rasnow, Newbury Park, CA;
Chuck Li, Thousand Oaks, CA;
Stephen Robert Wilson, Victoria, AUSTRALIA;

Power of Attorney: The patent practitioners associated with Customer Number **21069**.

Domestic Priority data as claimed by applicant

Foreign Applications

If Required, Foreign Filing License Granted: 06/01/2006

The country code and number of your priority application, to be used for filing abroad under the Paris Convention, is US11/417,271

Projected Publication Date: 11/08/2007

Non-Publication Request: No

Early Publication Request: No

Title

Robotic gripper for transporting multiple object types

Preliminary Class

422

PROTECTING YOUR INVENTION OUTSIDE THE UNITED STATES

Since the rights granted by a U.S. patent extend only throughout the territory of the United States and have no effect in a foreign country, an inventor who wishes patent protection in another country must apply for a patent in a specific country or in regional patent offices. Applicants may wish to consider the filing of an international application under the Patent Cooperation Treaty (PCT). An international (PCT) application generally has the same effect as a regular national patent application in each PCT-member country. The PCT process **simplifies** the filing of patent applications on the same invention in member countries, but **does not result** in a grant of "an international patent" and does not eliminate the need of applicants to file additional documents and fees in countries where patent protection is desired.

Almost every country has its own patent law, and a person desiring a patent in a particular country must make an application for patent in that country in accordance with its particular laws. Since the laws of many countries differ in various respects from the patent law of the United States, applicants are advised to seek guidance from specific foreign countries to ensure that patent rights are not lost prematurely.

Applicants also are advised that in the case of inventions made in the United States, the Director of the USPTO must issue a license before applicants can apply for a patent in a foreign country. The filing of a U.S. patent application serves as a request for a foreign filing license. The application's filing receipt contains further information and guidance as to the status of applicant's license for foreign filing.

Applicants may wish to consult the USPTO booklet, "General Information Concerning Patents" (specifically, the section entitled "Treaties and Foreign Patents") for more information on timeframes and deadlines for filing foreign patent applications. The guide is available either by contacting the USPTO Contact Center at 800-786-9199, or it can be viewed on the USPTO website at http://www.uspto.gov/web/offices/pac/doc/general/index.html.

For information on preventing theft of your intellectual property (patents, trademarks and copyrights), you may wish to consult the U.S. Government website, http://www.stopfakes.gov. Part of a Department of Commerce initiative, this website includes self-help "toolkits" giving innovators guidance on how to protect intellectual property in specific countries such as China, Korea and Mexico. For questions regarding patent enforcement issues, applicants may call the U.S. Government hotline at 1-866-999-HALT (1-866-999-4158).

LICENSE FOR FOREIGN FILING UNDER
Title 35, United States Code, Section 184
Title 37, Code of Federal Regulations, 5.11 & 5.15

GRANTED

The applicant has been granted a license under 35 U.S.C. 184, if the phrase "IF REQUIRED, FOREIGN FILING LICENSE GRANTED" followed by a date appears on this form. Such licenses are issued in all applications where the conditions for issuance of a license have been met, regardless of whether or not a license may be required as set forth in 37 CFR 5.15. The scope and limitations of this license are set forth in 37 CFR 5.15(a) unless an earlier license has been issued under 37 CFR 5.15(b). The license is subject to revocation upon written notification. The date indicated is the effective date of the license, unless an earlier license of similar scope has been granted under 37 CFR 5.13 or 5.14.

This license is to be retained by the licensee and may be used at any time on or after the effective date thereof unless it is revoked. This license is automatically transferred to any related applications(s) filed under 37 CFR

1.53(d). This license is not retroactive.

The grant of a license does not in any way lessen the responsibility of a licensee for the security of the subject matter as imposed by any Government contract or the provisions of existing laws relating to espionage and the national security or the export of technical data. Licensees should apprise themselves of current regulations especially with respect to certain countries, of other agencies, particularly the Office of Defense Trade Controls, Department of State (with respect to Arms, Munitions and Implements of War (22 CFR 121-128)); the Bureau of Industry and Security, Department of Commerce (15 CFR parts 730-774); the Office of Foreign Assets Control, Department of Treasury (31 CFR Parts 500+) and the Department of Energy.

NOT GRANTED

No license under 35 U.S.C. 184 has been granted at this time, if the phrase "IF REQUIRED, FOREIGN FILING LICENSE GRANTED" DOES NOT appear on this form. Applicant may still petition for a license under 37 CFR 5.12, if a license is desired before the expiration of 6 months from the filing date of the application. If 6 months has lapsed from the filing date of this application and the licensee has not received any indication of a secrecy order under 35 U.S.C. 181, the licensee may foreign file the application pursuant to 37 CFR 5.15(b).

UNITED STATES PATENT AND TRADEMARK OFFICE

Commissioner for Patents
United States Patent and Trademark Office
P.O. Box 1450
Alexandria, VA 22313-1450
www.uspto.gov

FOLEY & LARDNER LLP
150 EAST GILMAN STREET
P.O. BOX 1497
MADISON, WI 53701-1497

COPY MAILED

AUG 1 2 2009

OFFICE OF PETITIONS

In re Application of
Brian RASNOW, et al.
Application No. 11/417,271
Filed: May 3, 2006
Attorney Docket No. **072197-0103**

DECISION ON PETITION TO WITHDRAW FROM RECORD

This is a decision on the Request to Withdraw as attorney or agent of record under 37 C.F.R. § 1.36(b), filed July 6, 2009.

The request is **NOT APPROVED**.

The request to withdraw as attorney/agent of record and change of correspondence address is hereby not accepted. Petitioner has not complied with current USPTO requirements, set forth in 37 CFR 10.40 concerning Request for Withdrawal as Attorney and Change of Correspondence Address. Specifically, pursuant to 37 CFR 10.40, the Office will require the practitioner(s) to certify that he, she or they have:

> (1) given reasonable notice to the client, prior to the expiration of the reply period, that the practitioner(s) intends to withdraw from employment;
>
> (2) delivered to the client or duly authorized representative of the client all papers and property (including funds) to which the client is entitled; and
>
> (3) notified the client of any replies that may be due and the time frame within which the client must respond.

Petitioner has not complied with the above certifications. It is suggested that petitioner submit a properly completed PTO/SB/83 (effective date May 12, 2008), which provides a section wherein practitioners may certify the completion of the above-listed activities necessary for the request to withdraw from representation to be granted.

Further, the Office will only accept correspondence address changes to the most current address information provided for the assignee of the entire interest *who properly became of record under 37 CFR 3.71*, or if no assignee of the entire interest has properly

been made of record, the most current address information provided for the first named inventor. 37 CFR 3.71 (c) states:

> ***An assignee becomes of record either in a national patent application or a reexamination proceeding by filing a statement in compliance with § 3.73 (b) that is signed by a party who is authorized to act on behalf of the assignee.***

The Office will also no longer change the correspondence address to that of a new practitioner unless the Request is accompanied by a power of attorney to a new practitioner (e.g., Form PTO/SB/82). All future communications from the Office will be directed to the above-listed address until otherwise properly notified by the applicant or a proper change of correspondence address has been submitted.

Telephone inquiries concerning this decision should be directed to the undersigned at 571-272- 7253. All other inquires concerning either the examination or status of the application should be directed to the Technology Center.

/Monica A. Graves/
Petitions Examiner, Office of Petitions

cc: **BRAIN I. MARCUS**
VIERRA MAGEN MARCUS & DENIRO, LLP
575 MARKET STREET, SUITE 2500
SAN FRANCISCO, CA 94105

UNITED STATES PATENT AND TRADEMARK OFFICE

Commissioner for Patents
United States Patent and Trademark Office
P.O. Box 1450
Alexandria, VA 22313-1450
www.uspto.gov

AMGEN INC.
MAIL STOP 28-2-C
ONE AMGEN CENTER DRIVE
THOUSAND OAKS, CA 91320-1799

COPY MAILED
NOV 24 2008

In re Application of	:	
Julie Germain, et al.	:	
Application No.: 11/417,329	:	ON PETITION
Filed: May 2, 2006	:	
Attorney Docket No.: A-737-US-DIV	:	

This is a decision on the petition, filed November 17, 2008, under 37 CFR 1.313(c)(2) to withdraw the above-identified application from issue after payment of the issue fee.

The petition is **GRANTED**.

The above-identified application is withdrawn from issue for consideration of a submission under 37 CFR 1.114 (request for continued examination). See 37 CFR 1.313(c)(2).

Petitioner is advised that the issue fee paid on November 3, 2008, cannot be refunded. If, however, this application is again allowed, petitioner may request that it be applied towards the issue fee required by the new Notice of Allowance.[1]

Telephone inquiries relating to this decision should be directed to the undersigned at (571) 272-3204.

The application is being referred to Technology Center AU 1621 for further processing of the request for continued examination under 37 CFR 1.114 and for consideration of the concurrently filed Information Disclosure Statement.

/SDB/

Sherry D. Brinkley
Petitions Examiner
Office of Petitions

[1] *The request to apply the issue fee to the new Notice may be satisfied by completing and returning the new Part B - Fee(s) Transmittal Form (along with any balance due at the time of submission). Petitioner is advised that the Issue Fee Transmittal Form* ***must*** *be completed and timely submitted to avoid abandonment of the application.*

UNITED STATES PATENT AND TRADEMARK OFFICE

Commissioner for Patents
United States Patent and Trademark Office
P.O. Box 1450
Alexandria, VA 22313-1450
www.uspto.gov

PHILIP S. JOHNSON
JOHNSON & JOHNSON
ONE JOHNSON & JOHNSON PLAZA
NEW BRUNSWICK NJ 08933-7003

COPY MAILED
SEP 23 2008

In re Application of	:	
Shartle, et al.	:	
Application No. 11/417,344	:	DECISION ON PETITION
Filed: 2 May, 2006	:	
Attorney Docket No. LFS-093USCNT2	:	

This is a decision on the petition under 37 C.F.R. §1.78(a)(3), filed on 2 August, 2007, to accept an unintentionally delayed claim under 35 U.S.C. §120 for the benefit of priority to the prior-filed nonprovisional application set forth by amendment filed with the petition.

The petition is **GRANTED**.

A petition for acceptance of a claim for late priority under 37 C.F.R. §1.78(a)(3) is only applicable to those applications filed on or after November 29, 2000. Further, the petition is appropriate only after the expiration of the period specified in 37 C.F.R. §1.78(a)(2)(ii). In addition, the petition under 37 C.F.R. §1.78(a)(3) must be accompanied by:

(1) the reference required by 35 U.S.C.§120 and 37 C.F.R. §1.78(a)(2)(i) of the prior-filed application, unless previously submitted;
(2) the surcharge set forth in §1.17(t); and
(3) a statement that the entire delay between the date the claim was due under 37 C.F.R. §1.78(a)(2)(ii) and the date the claim was filed was unintentional. The Director may require additional information where there is a question whether the delay was unintentional.

The requirements above have been satisfied, and the late claim for priority under 35 U.S.C. § 120 is accepted as being unintentionally delayed.

The granting of the petition to accept the delayed benefit claim to the prior-filed applications under 37 CFR 1.78(a)(3) should not be construed as meaning that this application is entitled to the benefit of the prior-filed applications. In order for this application to be entitled to the benefit of the prior-filed applications, all other requirements under 35 U.S.C. § 120 and 37 CFR 1.78(a)(1) and (a)(2) must be met. Similarly, the fact that the corrected Filing Receipt accompanying this decision on petition includes the prior-filed applications should not be construed as meaning that applicant is entitled to the claim for benefit of priority to the prior-filed applications noted thereon. Accordingly, the examiner will, in due course, consider this benefit claim and determine whether the application is entitled to the benefit of the earlier filing date.

A corrected Filing Receipt, which includes the priority claim to the prior-filed nonprovisional application, accompanies this decision on petition.

Any inquiries concerning this decision may be directed to John Gillon, Attorney, at (571) 272-3214. All other inquiries concerning either the examination procedures or status of the application should be directed to the Technology Center.

This application is being forwarded to Technology Center AU 3735 for consideration by the examiner of applicant's entitlement to claim benefit of priority under 35 U.S.C. §120 to the prior-filed applications.

Anthony Knight
Supervisor
Office of Petitions

ATTACHMENT: Corrected Filing Receipt

UNITED STATES PATENT AND TRADEMARK OFFICE

UNITED STATES DEPARTMENT OF COMMERCE
United States Patent and Trademark Office
Address: COMMISSIONER FOR PATENTS
P.O. Box 1450
Alexandria, Virginia 22313-1450
www.uspto.gov

APPLICATION NUMBER	FILING or 371(c) DATE	GRP ART UNIT	FIL FEE REC'D	ATTY.DOCKET.NO	TOT CLAIMS	IND CLAIMS
11/417,344	05/02/2006	3735	1000	LFS-093USCNT2	16	2

CONFIRMATION NO. 8675

CORRECTED FILING RECEIPT

OC000000031685523

27777
PHILIP S. JOHNSON
JOHNSON & JOHNSON
ONE JOHNSON & JOHNSON PLAZA
NEW BRUNSWICK, NJ 08933-7003

Date Mailed: 08/21/2008

Receipt is acknowledged of this non-provisional patent application. The application will be taken up for examination in due course. Applicant will be notified as to the results of the examination. Any correspondence concerning the application must include the following identification information: the U.S. APPLICATION NUMBER, FILING DATE, NAME OF APPLICANT, and TITLE OF INVENTION. Fees transmitted by check or draft are subject to collection. Please verify the accuracy of the data presented on this receipt. **If an error is noted on this Filing Receipt, please submit a written request for a Filing Receipt Correction. Please provide a copy of this Filing Receipt with the changes noted thereon. If you received a "Notice to File Missing Parts" for this application, please submit any corrections to this Filing Receipt with your reply to the Notice. When the USPTO processes the reply to the Notice, the USPTO will generate another Filing Receipt incorporating the requested corrections**

Applicant(s)

Robert Justice Shartle, Livermore, CA;
Timothy J. Ohara, San Ramon, CA;
Mahyar Z. Kermani, Pleasanton, CA;

Power of Attorney:
Steven Berman--24772
Mark Warefield--33463

Domestic Priority data as claimed by applicant

This application is a CON of 10/975,258 10/28/2004 PAT 7,050,843
which is a CON of 10/678,342 10/03/2003 ABN
which is a DIV of 09/540,319 03/31/2000 ABN

Foreign Applications

If Required, Foreign Filing License Granted: 06/01/2006

The country code and number of your priority application, to be used for filing abroad under the Paris Convention, is **US 11/417,344**

Projected Publication Date: Not Applicable

Non-Publication Request: No

Early Publication Request: No

Title

Electrically-conductive patterns for monitoring the filling of medical devices

Preliminary Class

600

PROTECTING YOUR INVENTION OUTSIDE THE UNITED STATES

Since the rights granted by a U.S. patent extend only throughout the territory of the United States and have no effect in a foreign country, an inventor who wishes patent protection in another country must apply for a patent in a specific country or in regional patent offices. Applicants may wish to consider the filing of an international application under the Patent Cooperation Treaty (PCT). An international (PCT) application generally has the same effect as a regular national patent application in each PCT-member country. The PCT process **simplifies** the filing of patent applications on the same invention in member countries, but **does not result** in a grant of "an international patent" and does not eliminate the need of applicants to file additional documents and fees in countries where patent protection is desired.

Almost every country has its own patent law, and a person desiring a patent in a particular country must make an application for patent in that country in accordance with its particular laws. Since the laws of many countries differ in various respects from the patent law of the United States, applicants are advised to seek guidance from specific foreign countries to ensure that patent rights are not lost prematurely.

Applicants also are advised that in the case of inventions made in the United States, the Director of the USPTO must issue a license before applicants can apply for a patent in a foreign country. The filing of a U.S. patent application serves as a request for a foreign filing license. The application's filing receipt contains further information and guidance as to the status of applicant's license for foreign filing.

Applicants may wish to consult the USPTO booklet, "General Information Concerning Patents" (specifically, the section entitled "Treaties and Foreign Patents") for more information on timeframes and deadlines for filing foreign patent applications. The guide is available either by contacting the USPTO Contact Center at 800-786-9199, or it can be viewed on the USPTO website at http://www.uspto.gov/web/offices/pac/doc/general/index.html.

For information on preventing theft of your intellectual property (patents, trademarks and copyrights), you may wish to consult the U.S. Government website, http://www.stopfakes.gov. Part of a Department of Commerce initiative, this website includes self-help "toolkits" giving innovators guidance on how to protect intellectual property in specific countries such as China, Korea and Mexico. For questions regarding patent enforcement issues, applicants may call the U.S. Government hotline at 1-866-999-HALT (1-866-999-4158).

LICENSE FOR FOREIGN FILING UNDER

Title 35, United States Code, Section 184

Title 37, Code of Federal Regulations, 5.11 & 5.15

GRANTED

The applicant has been granted a license under 35 U.S.C. 184, if the phrase "IF REQUIRED, FOREIGN FILING LICENSE GRANTED" followed by a date appears on this form. Such licenses are issued in all applications where the conditions for issuance of a license have been met, regardless of whether or not a license may be required as

set forth in 37 CFR 5.15. The scope and limitations of this license are set forth in 37 CFR 5.15(a) unless an earlier license has been issued under 37 CFR 5.15(b). The license is subject to revocation upon written notification. The date indicated is the effective date of the license, unless an earlier license of similar scope has been granted under 37 CFR 5.13 or 5.14.

This license is to be retained by the licensee and may be used at any time on or after the effective date thereof unless it is revoked. This license is automatically transferred to any related applications(s) filed under 37 CFR 1.53(d). This license is not retroactive.

The grant of a license does not in any way lessen the responsibility of a licensee for the security of the subject matter as imposed by any Government contract or the provisions of existing laws relating to espionage and the national security or the export of technical data. Licensees should apprise themselves of current regulations especially with respect to certain countries, of other agencies, particularly the Office of Defense Trade Controls, Department of State (with respect to Arms, Munitions and Implements of War (22 CFR 121-128)); the Bureau of Industry and Security, Department of Commerce (15 CFR parts 730-774); the Office of Foreign AssetsControl, Department of Treasury (31 CFR Parts 500+) and the Department of Energy.

NOT GRANTED

No license under 35 U.S.C. 184 has been granted at this time, if the phrase "IF REQUIRED, FOREIGN FILING LICENSE GRANTED" DOES NOT appear on this form. Applicant may still petition for a license under 37 CFR 5.12, if a license is desired before the expiration of 6 months from the filing date of the application. If 6 months has lapsed from the filing date of this application and the licensee has not received any indication of a secrecy order under 35 U.S.C. 181, the licensee may foreign file the application pursuant to 37 CFR 5.15(b).

UNITED STATES PATENT AND TRADEMARK OFFICE

Commissioner for Patents
United States Patent and Trademark Office
P.O. Box 1450
Alexandria, VA 22313-1450
www.uspto.gov

JJGJR.: 02-07

Paper No: __

NIXON PEABODY LLP - PATENT GROUP
CLINTON SQUARE
P.O. BOX 31051
ROCHESTER NY 14603-1051

COPY MAILED

MAR 0 2 2007

OFFICE OF PETITIONS

In re Application of	:	
Andersen, et al.	:	
Application No. 11/417,346	:	ON PETITION
Filed: 3 May, 2006	:	
Attorney Docket No.	:	
34186/1007(3696P.1USCON2)		

This is a decision on the papers considered as a petition filed on 23 October, 2006, under 37 C.F.R. §1.47(a).

For the reasons set forth below, the petition under 37 C.F.R. §1.47(a) is **DISMISSED**.

NOTES:

(1) Any reply must include a renewed petition (and fee) must include a petition under 37 C.F.R. §1.47 and must be submitted within two (2) months from the mail date of this decision. Extensions of time under 37 C.F.R. §1.136(a) are permitted. The reconsideration request should include a cover letter entitled "Petition under 37 C.F.R. §1.47";

(2) Thereafter, there will be no further reconsideration of this matter.

BACKGROUND

The record indicates:

- the instant application (reissue) was filed on 3 May, 2006, without, *inter alia*, a fully executed oath/declaration;

- on 5 June, 2006, the Office mailed a Notice of Missing Parts indicating, *inter alia*, that a fully executed oath/declaration (signed and dated) was required because the instant petition was filed contemporaneously with the application;

- on 23 October, 2006, Petitioner Michael Goldman (Reg. No. 30,727) filed, *inter alia*, the instant petition and made a statement and submitted an oath/declaration signed by Messrs. Andersen and Bowman for themselves and on behalf of non-signing inventors Alice Erwin, Eric Harwood, Toni Kline, Khisimuzi Mdluli, Simon Ng, Keither B. Pfister, Rabhi Shawar, Allan S. Wagman and Asha Yabannavar–all of whom Petitioner avers are employees of Chiron Corp., and for none of whom does Petitioner provide a residential address, and without any indication of record from the non-signing inventors Petitioner groups these persons together and directs correspondence to them (without them as addressees or co-addressees) through another Chiron employee (one Steven W.Collier) absent evidence of representation authority, and, further Petitioner avers that "the conduct of the non-signing inventors, namely that of Chiron Employees, constitutes a refusal to sign the application declaration"–thus Petitioner appears to ignore rather than satisfy the statutory and regulatory requirements related to the submission of an entire application (description, claims, abstract and drawings to each and every individual inventor.

Documentation evidencing satisfaction of the statutory and regulatory requirements, as set forth above and discussed below must be provided with any future petition in this matter.

Out of an abundance of caution, Petitioners always are reminded that those registered to practice *and* all others who make representations before the Office are to inquire into the underlying facts of representations made to the Office and support averments with the appropriate documentation–since all owe to the Office the continuing duty to disclose.[1]

---

[1] See supplement of 17 June, 1999. The Patent and Trademark Office is relying on petitioner's duty of candor and good faith and accepting a statement made by Petitioner. See Changes to Patent Practice and Procedure, 62 Fed. Reg. at 53160 and 53178, 1203 Off. Gaz. Pat. Office at 88 and 103 (responses to comments 64 and 109)(applicant obligated under 37 C.F.R. §10.18 to inquire into the underlying facts and circumstances when providing statements to the Patent and Trademark Office).

Specifically, the regulations at 37 C.F.R. §10.18 provide:

§ 10.18 Signature and certificate for correspondence filed in the Patent and Trademark Office.
(a) For all documents filed in the Office in patent, trademark, and other non-patent matters, except for correspondence that is required to be signed by the applicant or party, each piece of correspondence filed by a practitioner in the Patent and Trademark Office must bear a signature by such practitioner complying with the provisions of §1.4(d), §1.4(e), or § 2.193(c)(1) of this chapter.
(b) By presenting to the Office (whether by signing, filing, submitting, or later advocating) any paper, the party presenting such paper, whether a practitioner or non-practitioner, is certifying that—
(1) All statements made therein of the party's own knowledge are true, all statements made therein on information and belief are believed to be true, and all statements made therein are made with the knowledge that whoever, in any matter within the jurisdiction of the Patent

ANALYSIS

The regulations at 37 C.F.R. §1.47 provide in pertinent part:

> **§ 1.47 Filing when an inventor refuses to sign or cannot be reached.**
> (a) If a joint inventor refuses to join in an application for patent or cannot be found or reached after diligent effort, the application may be made by the other inventor on behalf of himself or herself and the nonsigning inventor. The oath or declaration in such an application must be accompanied by a petition including proof of the pertinent facts, the fee set forth in § 1.17(h), and the last known address of the nonsigning inventor. The nonsigning inventor may subsequently join in the application by filing an oath or declaration complying with §1.63.
> * * *

The regulations at 37 C.F.R. §1.63 provide in pertinent part:

> **§1.63 Oath or declaration.**
>
> (b) In addition to meeting the requirements of paragraph (a)of this section, the oath or declaration must also:

---

and Trademark Office, knowingly and willfully falsifies, conceals, or covers up by any trick, scheme, or device a material fact, or makes any false, fictitious or fraudulent statements or representations, or makes or uses any false writing or document knowing the same to contain any false, fictitious or fraudulent statement or entry, shall be subject to the penalties set forth under 18 U.S.C. 1001, and that violations of this paragraph may jeopardize the validity of the application or document, or the validity or enforceability of any patent, trademark registration, or certificate resulting therefrom; and

(2) To the best of the party's knowledge, information and belief, formed after an inquiry reasonable under the circumstances, that —

(i) The paper is not being presented for any improper purpose, such as to harass someone or to cause unnecessary delay or needless increase in the cost of prosecution before the Office;

(ii) The claims and other legal contentions therein are warranted by existing law or by a nonfrivolous argument for the extension, modification, or reversal of existing law or the establishment of new law;

(iii) The allegations and other factual contentions have evidentiary support or, if specifically so identified, are likely to have evidentiary support after a reasonable opportunity for further investigation or discovery; and

(iv) The denials of factual contentions are warranted on the evidence, or if specifically so identified, are reasonably based on a lack of information or belief.

(c) Violations of paragraph (b)(1) of this section by a practitioner or non-practitioner may jeopardize the validity of the application or document, or the validity or enforceability of any patent, trademark registration, or certificate resulting therefrom. Violations of any of paragraphs (b)(2)(i) through (iv) of this section are, after notice and reasonable opportunity to respond, subject to such sanctions as deemed appropriate by the Commissioner, or the Commissioner's designee, which may include, but are not limited to, any combination of —

(1) Holding certain facts to have been established;

(2) Returning papers;

(3) Precluding a party from filing a paper, or presenting or contesting an issue;

(4) Imposing a monetary sanction;

(5) Requiring a terminal disclaimer for the period of the delay; or

(6) Terminating the proceedings in the Patent and Trademark Office.

(d) Any practitioner violating the provisions of this section may also be subject to disciplinary action. See § 10.23(c)(15).

[Added 50 FR 5175, Feb. 6, 1985, effective Mar. 8, 1985; para. (a) revised, 58 FR 54494, Oct. 22, 1993, effective Nov. 22, 1993; paras. (a) & (b) revised, paras. (c) & (d) added, 62 FR 53131, Oct. 10, 1997, effective Dec. 1, 1997; para. (a) revised, 69 FR 56481, Sept. 21, 2004, effective Oct. 21, 2004]

(1)Identify the application to which it is directed;

(2) State that the person making the oath or declaration has reviewed and understands the contents of the application, Including the claims, as amended by any amendment specifically referred to in the oath or declaration; and

(3) State that the person making the oath or declaration acknowledges the duty to disclose to the Office all information known to the person to be material to patentability as defined in § 1.56.

When one alleges a refusal of the inventor to sign the application papers, the circumstances of the presentation of the application papers and of the refusal must be specified in a statement of facts by the person who, *inter alia*, presented the inventor with the application papers and/or to whom the refusal was made.

The commentary at MPEP §409.03(d) provides:

409.03(d) Proof of Unavailability or Refusal

INVENTOR CANNOT BE REACHED

Where inability to find or reach a nonsigning inventor "after diligent effort" is the reason for filing under 37 C.F.R. §1.47, a statement of facts should be submitted that fully describes the exact facts which are relied on to establish that a diligent effort was made.

The fact that a nonsigning inventor is on vacation or out of town and is therefore temporarily unavailable to sign the declaration is not an acceptable reason for filing under 37 C.F.R. §1.47.

Furthermore, the fact that an inventor is hospitalized and/or is not conscious is not an acceptable reason for filing under 37 C.F.R. §1.47. 37 C.F.R. §1.43 may be available under these circumstances. See MPEP §409.02. Such a petition under 37 C.F.R. §1.47 will be dismissed as inappropriate.

The statement of facts must be signed, where at all possible, by a person having firsthand knowledge of the facts recited therein. Statements based on hearsay will not normally be accepted. Copies of documentary evidence such as internet searches, certified mail return receipts, cover letters of instructions, telegrams, that support a finding that the nonsigning inventor could not be found or reached

should be made part of the statement. The steps taken to locate the whereabouts of the nonsigning inventor should be included statement of facts. It is important that the statement contain facts as opposed to conclusions.

REFUSAL TO JOIN

A refusal by an inventor to sign an oath or declaration when the inventor has not been presented with the application papers does not itself suggest that the inventor is refusing to join the application unless it is clear that the inventor understands exactly what he or she is being asked to sign and refuses to accept the application papers. A copy of the application papers should be sent to the last known address of the nonsigning inventor, or, if the nonsigning inventor is represented by counsel, to the address of the nonsigning inventor's attorney. The fact that an application may contain proprietary information does not relieve the 37 C.F.R. §1.47 applicant of the responsibility to present the application papers to the inventor if the inventor is willing to receive the papers in order to sign the oath or declaration. It is noted that the inventor may obtain a complete copy of the application, unless the inventor has assigned his or her interest in the application, and the assignee has requested that the inventor not be permitted access. See MPEP §106. It is reasonable to require that the inventor be presented with the application papers before a petition under 37 C.F.R. §1.47 is granted since such a procedure ensures that the inventor is apprised of the application to which the oath or declaration is directed. In re Gray, 115 USPQ 80 (Comm'r Pat. 1956).

Where a refusal of the inventor to sign the application papers is alleged, the circumstances of the presentation of the application papers and of the refusal must be specified in a statement of facts by the person who presented the inventor with the application papers and/or to whom the refusal was made. Statements by a party not present when an oral refusal is made will not be accepted.

Proof that a bona fide attempt was made to present a copy of the application papers (specification, including claims, drawings, and oath or declaration) to the nonsigning inventor for signature, but the inventor refused to accept delivery of the papers or expressly stated that the application papers should not be sent, may be sufficient.

When there is an express oral refusal, that fact along with the time and place of the refusal must be stated in the statement of facts. When there is an express written refusal, a copy of the document evidencing that refusal must be made part of the statement of facts. The document may be redacted to remove material not related to the inventor's reasons for refusal.

> When it is concluded by the 37 C.F.R. §1.47 applicant that a nonsigning inventor's conduct constitutes a refusal, all facts upon which that conclusion is based should be stated in the statement of facts in support of the petition or directly in the petition. If there is documentary evidence to support facts alleged in the petition or in any statement of facts, such evidence should be submitted. Whenever a nonsigning inventor gives a reason for refusing to sign the application oath or declaration, that reason should be stated in the petition.

Thus, not only must a copy of the entire application must be sent to the last known address of the non-signing inventor (or the estate representative) with a request that he/she sign the declaration for the patent application–and evidence of that transmittal submitted–but also a reasonable effort must be made to ascertain a current or last known address, and the petition (with fee) must state over the signature and registration number of the Petitioner the last known address and, if appropriate, evidence of the due diligence effort ascertaining same.

Alternatively, an oath or declaration for the patent application in compliance with 37 C.F.R. §§1.63 and 1.64 must be presented.

(The declaration must set forth the inventor's residence, citizenship and post office address. An oath or declaration in compliance with 37 C.F.R. §§1.63 and 1.64 signed by the Rule 1.47 applicant is required.[2])

CONCLUSION

The record as it stands is deficient as to document support for the averment of transmittal of the entire application (description, claims, abstract and drawings) to the non-signing inventor to/at current/valid (or at least reasonably last-known/ascertainable) address. The evidence of these requirements (*inter alia*, a copy of the transmittal letter) should be submitted with any renewed petition–and Petitioner should review the Background section, above, to ensure that all matters raised therein have been addressed.

Therefore, the instant petition hereby is **dismissed**.

---

[2] See: MPEP 409.03(b).

Further correspondence with respect to this matter should be addressed as follows:[3]

By mail: Commissioner for Patents[4]
P.O. Box 1450
Alexandria, VA 22313-1450

By FAX: IFW Formal Filings
(571) 273-8300
ATTN.: Office of Petitions

By hand: Mail Stop: Petition
Customer Service Window
Randolph Building
401 Dulany Street
Alexandria, VA 22314

While telephone inquiries regarding this decision may be directed to the undersigned at (571) 272-3214, it is noted that all practice before the Office is in writing (see: 37 C.F.R. §1.2[10]) and the proper authority for action on any matter in this regard are the statutes (35 U.S.C.), regulations (37 C.F.R.) and the commentary on policy (MPEP). Therefore, no telephone discussion may be controlling or considered authority for Petitioner's action(s).

John J. Gillon, Jr.
Senior Attorney
Office of Petitions

---

[3] On July 15, 2005, the Central Facsimile (FAX) Number will change from (703) 872-9306 to (571) 273-8300. Faxes sent to the old number will be routed to the new number until September 15, 2005. After September 15, 2005, the old number will no longer be in service and (571) 273-8300 will be the only facsimile number recognized for centralized delivery. (For further information. see: http://www.uspto.gov/web/offices/pac/dapp/opla/preognotice/cfax062005.pdf .)

[4] To determine the appropriate addresses for other subject-specific correspondence, refer to the USPTO Web site at www.uspto.gov.

[10] The regulations at 37 C.F.R. §1.2 provide:

§1.2 Business to be transacted in writing.
All business with the Patent and Trademark Office should be transacted in writing.The personal attendance of applicants or their attorneys or agents at the Patent and Trademark Office is unnecessary. The action of the Patent and Trademark Office will be based exclusively on the written record in the Office. No attention will be paid to any alleged oral promise, stipulation,or understanding in relation to which there is disagreement or doubt.

UNITED STATES PATENT AND TRADEMARK OFFICE

Commissioner for Patents
United States Patent and Trademark Office
P.O. Box 1450
Alexandria, VA 22313-1450
www.uspto.gov

COPY MAILED

FEB 29 2008

NIXON PEABODY LLP - PATENT GROUP
CLINTON SQUARE
P.O. BOX 31051
ROCHESTER NY 14603-1051

In re Application of Andersen, et al. Application No. 11/417,346 Filed: 3 May, 2006 Attorney Docket No. 34186/1007(3696P.1USCON2)	: : : : :	ON PETITION

This is a decision on the papers considered as a petition filed on 2 July, 2007, under 37 C.F.R. §1.47(a).

The Office regrets the delay in addressing this matter, however, the instant petition was presented to the attorneys in the Office of Petitions only at this writing.

For the reasons set forth below, the petition under 37 C.F.R. §1.47(a) is **GRANTED**.

BACKGROUND

The record indicates:

- the instant application (reissue) was filed on 3 May, 2006, without, *inter alia*, a fully executed oath/declaration;
- on 5 June, 2006, the Office mailed a Notice of Missing Parts indicating, *inter alia*, that a fully executed oath/declaration (signed and dated) was required because the instant petition was filed contemporaneously with the application;
- on 23 October, 2006, Petitioner Michael Goldman (Reg. No. 30,727) filed, *inter alia*, the

instant petition and made a statement and submitted an oath/declaration signed by Messrs. Andersen and Bowman for themselves and on behalf of non-signing inventors Alice Erwin, Eric Harwood, Toni Kline, Khisimuzi Mdluli, Simon Ng, Keither B. Pfister, Rabhi Shawar, Allan S. Wagman and Asha Yabannavar–all of whom Petitioner avers are employees of Chiron Corp., and for none of whom does Petitioner provide a residential address, and without any indication of record from the non-signing inventors Petitioner groups these persons together and directs correspondence to them (without them as addressees or co-addressees) through another Chiron employee (one Steven W.Collier) absent evidence of representation authority, and, further Petitioner avers that "the conduct of the non-signing inventors, namely that of Chiron Employees, constitutes a refusal to sign the application declaration"–thus Petitioner appears to ignore rather than satisfy the statutory and regulatory requirements related to the submission of an entire application (description, claims, abstract and drawings to each and every individual inventor–thus, the petition was dismissed on 2 March, 2007;

- the instant petition seeks to overcome these deficiencies, and demonstrates, *inter alia*:the joinder in the execution of the oath/declaration by co-inventors Erwin, Harwood, Kline, Mdluli, Shawar, Wagman and Yabannavar; and that co-inventors Ng and Pfister have (constructively) refused/failed to join/sign after a copy of the entire application (description, claims, abstract and drawings) was sent to each of them.

The availability of applications and application papers online to applicants/practitioners who diligently associate their Customer Number with the respective application(s) now provides an applicant/practitioner on-demand information as to events/transactions in an application.

Out of an abundance of caution, Petitioners always are reminded that those registered to practice *and* all others who make representations before the Office are to inquire into the underlying facts of representations made to the Office and support averments with the appropriate documentation–since all owe to the Office the continuing duty to disclose.[1]
This application and its papers have been reviewed and found in compliance with 37 C.F.R. §1.47(a).

This application hereby is **ACCORDED status under 37 C.F.R. §1.47(a)**.

---

[1] See supplement of 17 June, 1999. The Patent and Trademark Office is relying on petitioner's duty of candor and good faith and accepting a statement made by Petitioner. See Changes to Patent Practice and Procedure, 62 Fed. Reg. at 53160 and 53178, 1203 Off. Gaz. Pat. Office at 88 and 103 (responses to comments 64 and 109)(applicant obligated under 37 C.F.R. §10.18 to inquire into the underlying facts and circumstances when providing statements to the Patent and Trademark Office).

See specifically, the regulations at 37 C.F.R. §10.18.

As provided under 37 C.F.R. §1.47(a), the Office will forward notice of this application's filing to the non-signing inventor at the address given in the petition.

Notice of the filing of this application also will be published in the Official Gazette.

This file is being released to OIPE for processing as necessary to reflect the instant decision before being released for further processing in due course.

While telephone inquiries regarding this decision may be directed to the undersigned at (571) 272-3214, it is noted that all practice before the Office is in writing (see: 37 C.F.R. §1.2[2]) and the proper authority for action on any matter in this regard are the statutes (35 U.S.C.), regulations (37 C.F.R.) and the commentary on policy (MPEP). Therefore, no telephone discussion may be controlling or considered authority for Petitioner's/Caller's action(s).

John J. Gillon, Jr.
Senior Attorney
Office of Petitions

[2] The regulations at 37 C.F.R. §1.2 provide:
§1.2 Business to be transacted in writing.
All business with the Patent and Trademark Office should be transacted in writing.The personal attendance of applicants or their attorneys or agents at the Patent and Trademark Office is unnecessary. The action of the Patent and Trademark Office will be based exclusively on the written record in the Office. No attention will be paid to any alleged oral promise, stipulation,or understanding in relation to which there is disagreement or doubt.

UNITED STATES PATENT AND TRADEMARK OFFICE

Commissioner for Patents
United States Patent and Trademark Office
P.O. Box 1450
Alexandria, VA 22313-1450
www.uspto.gov

JJGJR.: 02-07

Paper No: __

COPY MAILED

FEB 29 2008

SIMON NG
543 PIMLICO CT.
WALNUT CREEK, CA 94597-3677

In re Application of	:	
Andersen, et al.	:	
Application No. 11/417,346	:	COMMUNICATION
Filed: 3 May, 2006	:	
Attorney Docket No.	:	
34186/1007(3696P.1USCON2)		

Dear Simon Ng:

You are named as inventor in the above identified United States patent application, filed under the provisions of 35 U.S.C. §116 (United States Code), and 37 C.F.R. §1.47,[1] ¶a, Rules of Practice in Patent Cases. Should a patent be granted on the application you will be designated therein as inventor.

---

[1] The regulations at 37 C.F.R. §1.47 provide:

§ 1.47 Filing when an inventor refuses to sign or cannot be reached.

(a) If a joint inventor refuses to join in an application for patent or cannot be found or reached after diligent effort, the application may be made by the other inventor on behalf of himself or herself and the nonsigning inventor. The oath or declaration in such an application must be accompanied by a petition including proof of the pertinent facts, the fee set forth in §1.17(h), and the last known address of the nonsigning inventor. The nonsigning inventor may subsequently join in the application by filing an oath or declaration complying with §1.63.

(b) Whenever all of the inventors refuse to execute an application for patent, or cannot be found or reached after diligent effort, a person to whom an inventor has assigned or agreed in writing to assign the invention, or who otherwise shows sufficient proprietary interest in the matter justifying such action, may make application for patent on behalf of and as agent for all the inventors. The oath or declaration in such an application must be accompanied by a petition including proof of the pertinent facts, a showing that such action is necessary to preserve the rights of the parties or to prevent irreparable damage, the fee set forth in §1.17(h), and the last known address of all of the inventors. An inventor may subsequently join in the application by filing an oath or declaration complying with §1.63.

© The Office will send notice of the filing of the application to all inventors who have not joined in the application at the address(es) provided in the petition under this section, and publish notice of the filing of the application in the *Official Gazette*. The Office may dispense with this notice provision in a continuation or divisional application, if notice regarding the filing of the prior application was given to the nonsigning inventor(s).

[47 Fed. Reg. 41275, Sept. 17, 1982, effective Oct. 1, 1982; 48 Fed. Reg. 2709, Jan. 20, 1983, effective Feb. 27, 1983; revised, 62 Fed. Reg. 53131, Oct. 10, 1997, effective Dec. 1, 1997; revised, 65 Fed. Reg. 54604, Sept. 8, 2000, effective Nov. 7, 2000]

As a named inventor you are entitled to inspect any paper in the file wrapper of the application, order copies of all or any part thereof (at a prepaid cost per 37 C.F.R. §1.19) or make your position of record in the application. Alternatively, you may arrange to do any of the preceding through a registered patent attorney or agent presenting written authorization from you. If you care to join the application, counsel of record (see below) would presumably assist you. Joining in the application would entail the filing of an appropriate oath or declaration by you pursuant to 37 C.F.R. §1.63.

Requests for information regarding your application should be directed to the File Information Unit at (703) 308-2733.

Information regarding how to pay for and order a copy of the application, or a specific paper in the application, should be directed to Certification Division at (703) 308-9726 or toll-free: (800) 972-6382 (outside the Washington D.C. area).

While telephone inquiries regarding this decision may be directed to the undersigned at (571) 272-3214, it is noted that all practice before the Office is in writing (see: 37 C.F.R. §1.2[2]) and the proper authority for action on any matter in this regard are the statutes (35 U.S.C.), regulations (37 C.F.R.) and the commentary on policy (MPEP). Therefore, no telephone discussion may be controlling or considered authority for Petitioner's/Caller's action(s).

John J. Gillon, Jr.
Senior Attorney
Office of Petitions

Counsel of Record:
NIXON PEABODY LLP - PATENT GROUP
CLINTON SQUARE
P.O. BOX 31051
ROCHESTER NY 14603-1051

---

[2] The regulations at 37 C.F.R. §1.2 provide:
§1.2 Business to be transacted in writing.
All business with the Patent and Trademark Office should be transacted in writing.The personal attendance of applicants or their attorneys or agents at the Patent and Trademark Office is unnecessary. The action of the Patent and Trademark Office will be based exclusively on the written record in the Office. No attention will be paid to any alleged oral promise, stipulation,or understanding in relation to which there is disagreement or doubt.

UNITED STATES PATENT AND TRADEMARK OFFICE

Commissioner for Patents
United States Patent and Trademark Office
P.O. Box 1450
Alexandria, VA 22313-1450
www.uspto.gov

JJGJR.: 02-07

Paper No: __

COPY MAILED

FEB 29 2008

KEITH PFISTER
2636 PRORMONTORY CIRCLE
SAN RAMON, CA 94583

In re Application of	:	
Andersen, et al.	:	
Application No. 11/417,346	:	COMMUNICATION
Filed: 3 May, 2006	:	
Attorney Docket No.	:	
34186/1007(3696P.1USCON2)		

Dear Keith Pfister:

You are named as inventor in the above identified United States patent application, filed under the provisions of 35 U.S.C. §116 (United States Code), and 37 C.F.R. §1.47,[1] ¶a, Rules of Practice in Patent Cases. Should a patent be granted on the application you will be designated therein as inventor.

---

[1] The regulations at 37 C.F.R. §1.47 provide:

§ 1.47 Filing when an inventor refuses to sign or cannot be reached.

(a) If a joint inventor refuses to join in an application for patent or cannot be found or reached after diligent effort, the application may be made by the other inventor on behalf of himself or herself and the nonsigning inventor. The oath or declaration in such an application must be accompanied by a petition including proof of the pertinent facts, the fee set forth in §1.17(h), and the last known address of the nonsigning inventor. The nonsigning inventor may subsequently join in the application by filing an oath or declaration complying with §1.63.

(b) Whenever all of the inventors refuse to execute an application for patent, or cannot be found or reached after diligent effort, a person to whom an inventor has assigned or agreed in writing to assign the invention, or who otherwise shows sufficient proprietary interest in the matter justifying such action, may make application for patent on behalf of and as agent for all the inventors. The oath or declaration in such an application must be accompanied by a petition including proof of the pertinent facts, a showing that such action is necessary to preserve the rights of the parties or to prevent irreparable damage, the fee set forth in §1.17(h), and the last known address of all of the inventors. An inventor may subsequently join in the application by filing an oath or declaration complying with §1.63.

© The Office will send notice of the filing of the application to all inventors who have not joined in the application at the address(es) provided in the petition under this section, and publish notice of the filing of the application in the *Official Gazette*. The Office may dispense with this notice provision in a continuation or divisional application, if notice regarding the filing of the prior application was given to the nonsigning inventor(s).

[47 Fed. Reg. 41275, Sept. 17, 1982, effective Oct. 1, 1982; 48 Fed. Reg. 2709, Jan. 20, 1983, effective Feb. 27, 1983; revised, 62 Fed. Reg. 53131, Oct. 10, 1997, effective Dec. 1, 1997; revised, 65 Fed. Reg. 54604, Sept. 8, 2000, effective Nov. 7, 2000]

As a named inventor you are entitled to inspect any paper in the file wrapper of the application, order copies of all or any part thereof (at a prepaid cost per 37 C.F.R. §1.19) or make your position of record in the application. Alternatively, you may arrange to do any of the preceding through a registered patent attorney or agent presenting written authorization from you. If you care to join the application, counsel of record (see below) would presumably assist you. Joining in the application would entail the filing of an appropriate oath or declaration by you pursuant to 37 C.F.R. §1.63.

Requests for information regarding your application should be directed to the File Information Unit at (703) 308-2733.

Information regarding how to pay for and order a copy of the application, or a specific paper in the application, should be directed to Certification Division at (703) 308-9726 or toll-free: (800) 972-6382 (outside the Washington D.C. area).

While telephone inquiries regarding this decision may be directed to the undersigned at (571) 272-3214, it is noted that all practice before the Office is in writing (see: 37 C.F.R. §1.2[2]) and the proper authority for action on any matter in this regard are the statutes (35 U.S.C.), regulations (37 C.F.R.) and the commentary on policy (MPEP). Therefore, no telephone discussion may be controlling or considered authority for Petitioner's/Caller's action(s).

John J. Gillon, Jr.
Senior Attorney
Office of Petitions

Counsel of Record:
NIXON PEABODY LLP - PATENT GROUP
CLINTON SQUARE
P.O. BOX 31051
ROCHESTER NY 14603-1051

---

[2] The regulations at 37 C.F.R. §1.2 provide:
§1.2 Business to be transacted in writing.
All business with the Patent and Trademark Office should be transacted in writing.The personal attendance of applicants or their attorneys or agents at the Patent and Trademark Office is unnecessary. The action of the Patent and Trademark Office will be based exclusively on the written record in the Office. No attention will be paid to any alleged oral promise, stipulation,or understanding in relation to which there is disagreement or doubt.

UNITED STATES PATENT AND TRADEMARK OFFICE

UNITED STATES DEPARTMENT OF COMMERCE
United States Patent and Trademark Office
Address: COMMISSIONER FOR PATENTS
P.O. Box 1450
Alexandria, Virginia 22313-1450
www.uspto.gov

APPLICATION NO.	FILING DATE	FIRST NAMED INVENTOR	ATTORNEY DOCKET NO.	CONFIRMATION NO.
11/417,367	05/04/2006	Kevin Nay	200504296-1	7952

7590 04/14/2008
HEWLETT PACKARD COMPANY
P O BOX 272400, 3404 E. HARMONY ROAD
INTELLECTUAL PROPERTY ADMINISTRATION
FORT COLLINS, CO 80527-2400

EXAMINER
VU, NGOC YEN T

ART UNIT	PAPER NUMBER
2622	

NOTIFICATION DATE	DELIVERY MODE
04/14/2008	ELECTRONIC

DECISION GRANTING PETITION UNDER 37 CFR 1.138(d)

The declaration of express abandonment is recognized

This is in response to the petition under 37 CFR 1.138(d), requesting for a refund of any previously paid search fee and excess claims fee in the above-identified application.

The petition is granted.

The express abandonment is recognized. Any previously paid search fee and excess claims fee are hereby refunded.

Telephone inquiries should be directed to the Office of Data Management at (571) 272-4200.

Nioni Farmer

Patent Publication Branch
Office of Data Management

FORM PET651G (Rev. 08/07)

UNITED STATES PATENT AND TRADEMARK OFFICE

UNITED STATES DEPARTMENT OF COMMERCE
United States Patent and Trademark Office
Address: COMMISSIONER FOR PATENTS
P.O. Box 1450
Alexandria, Virginia 22313-1450
www.uspto.gov

FRASER CLEMENS MARTIN & MILLER LLC
28366 KENSINGTON LANE
PERRYSBURG, OH 43551

Mail Date: 04/20/2010

Applicant	: Scott J. Clifford	: DECISION ON REQUEST FOR
Patent Number	: 7622158	: RECALCULATION of PATENT
Issue Date	: 11/24/2009	: TERM ADJUSTMENT IN VIEW
Appliction No	: 11/417,368	: OF WYETH AND NOTICE OF INTENT TO
Filed	: 05/04/2006	: ISSUE CERTIFICATE OF CORRECTION
		:

The Request for Recalculation is **GRANTED** to the extent indicated.

The patent term adjustment has been determined to be **730** days. The USPTO will *sua sponte* issue a certificate of correction reflecting the amount of PTA days determined by the recalculation.

Prior to the issuance of the certificate of correction, the USPTO will afford patentee an opportunity to be heard and request reconsideration. Accordingly, patentee has **one month or thirty (30) days**, whichever is longer, to file a request for reconsideration of this patent term adjustment calculation. See 35 U.S.C. 154(b)(3)(B)(ii) and 37 CFR 1.322(a)(4). No extensions of time will be granted under 37 CFR 1.136.

Patentee should use document code PET.OP if electronically filing a request for reconsideration of this patent term adjustment calculation. The patentee must also include the information required by 37 CFR 1.705(b)(2) and the fee required by 37 CFR 1.18(e). If patentee does not file a timely request for reconsideration of this patent term adjustment calculation including the information required by 37 CFR 1.705(b)(2) and the fee required by 37 CFR 1.18(e), the USPTO will issue a certificate of correction reflecting the PTA determination noted above.

Patentee should be aware that in order to preserve the right to review in the United States District Court for the District of Columbia of the USPTO patent term adjustment determination, patentee must ensure that he or she also take the steps required under 35 U.S.C. 154(b)(4)(A) in a timely manner. Nothing in the request for recalculation should be construed as providing an alternative time frame for commencing a civil action under 35 U.S.C. 154(b)(4)(A).

Any questions concerning this decision should be directed to the Office of Patent Legal Administration at 571-272-7702.

UNITED STATES PATENT AND TRADEMARK OFFICE

UNITED STATES DEPARTMENT OF COMMERCE
United States Patent and Trademark Office
Address: COMMISSIONER FOR PATENTS
P.O. Box 1450
Alexandria, Virginia 22313-1450
www.uspto.gov

APPLICATION NO.	FILING DATE	FIRST NAMED INVENTOR	ATTORNEY DOCKET NO.	CONFIRMATION NO.
11/417,377	05/04/2006	Kevin Nay	200504297-1	7954

7590 04/14/2008
HEWLETT PACKARD COMPANY
P O BOX 272400, 3404 E. HARMONY ROAD
INTELLECTUAL PROPERTY ADMINISTRATION
FORT COLLINS, CO 80527-2400

EXAMINER
VU, NGOC YEN T

ART UNIT	PAPER NUMBER
2622	

NOTIFICATION DATE	DELIVERY MODE
04/14/2008	ELECTRONIC

DECISION GRANTING PETITION UNDER 37 CFR 1.138(d)

The declaration of express abandonment is recognized

This is in response to the petition under 37 CFR 1.138(d), requesting for a refund of any previously paid search fee and excess claims fee in the above-identified application.

The petition is granted.

The express abandonment is recognized. Any previously paid search fee and excess claims fee are hereby refunded.

Telephone inquiries should be directed to the Office of Data Management at (571) 272-4200.

Nioni Farmer

Patent Publication Branch
Office of Data Management

Adjustment date: 04/15/2008 DTERRY
05/08/2006 HMARZI1 0000039 082025 11417377
01 FC:1111 500.00 CR
04 FC:1202 400.00 CR

FORM PET651G (Rev. 08/07)

UNITED STATES PATENT AND TRADEMARK OFFICE

Commissioner for Patents
United States Patent and Trademark Office
P.O. Box 1450
Alexandria, VA 22313-1450
www.uspto.gov

COPY MAILED
SEP 21 2006
OFFICE OF PETITIONS

KNOBBE MARTENS OLSON & BEAR, LLP
2040 MAIN STREET
FOURTEENTH FLOOR
IRVINE, CA 92614

In re Application of	:	
Lawrence Kates	:	
Application No. 11/417,394	:	DECISION ON PETITION
Filed: May 3, 2006	:	TO MAKE SPECIAL UNDER
Attorney Docket No. KATES.015DV3	:	37 CFR 1.102(c)(1)
	:	

This is a decision on the petition under 37 CFR 1.102(c)(1), filed May 24, 2006, to make the above-identified application special based on applicant's age as set forth in M.P.E.P. § 708.02, Section IV.

The petition is **GRANTED**.

A grantable petition to make an application special under 37 CFR 1.102(c)(1) and MPEP § 708.02, Section IV: Applicant's Age must be accompanied by evidence showing that at least one of the applicants is 65 years of age, or more, such as a birth certificate or a statement by applicant. No fee is required

The instant petition includes a statement from Inventor Lawrence Kates stating that he is over 65 years of age. Accordingly, the above-identified application has been accorded "special" status.

Telephone inquiries concerning this decision should be directed to Irvin Dingle at 571-272-3210.

All other inquiries concerning either the examination or status of the application should be directed to the Technology Center.

The matter is being referred to the Technology Center Art Unit 3643 for action on the merits commensurate with this decision.

Irvin Dingle
Petitions Examiner
Office of Petitions

SPE RESPONSE FOR CERTIFICATE OF CORRECTION

DATE : 9/14/09 **Paper No.:** _____

TO SPE OF : ART UNIT 3711 Kim, Eugene (SPE)

SUBJECT : Request for Certificate of Correction for Appl. No.: 11/417401 Patent No.: 7491137

Please respond to this request for a certificate of correction within 7 days.

FOR IFW FILES:

Please review the requested changes/corrections as shown in the **COCIN** document(s) in the IFW application image. No new matter should be introduced, nor should the scope or meaning of the claims be changed.

Please complete the response (see below) and forward the completed response to scanning using document code **COCX**.

FOR PAPER FILES:

Please review the requested changes/corrections as shown in the attached certificate of correction. Please complete this form (see below) and forward it with the file to:

Certificates of Correction Branch (CofC)
South Tower - 9A22
Palm Location 7580

H. Rlop
Certificates of Correction Branch
703-308-9390 ext. _____

Thank You For Your Assistance

The request for issuing the above-identified correction(s) is hereby:
Note your decision on the appropriate box.

- [x] **Approved** — All changes apply.
- [ ] **Approved in Part** — Specify below which changes **do not** apply.
- [ ] **Denied** — State the reasons for denial below.

Comments: Stephen L. Blau (ART UNIT 3711, PRIMARY EXAMINER)

Gene Kim — Digitally signed by Gene Kim, DN: cn=Gene Kim, c=US, o=PTO, ou=AU 3711, email=eugene.kim@uspto.gov, Date: 2010.01.12 06:34:07 -05'00'

SPE **Art Unit**

UNITED STATES PATENT AND TRADEMARK OFFICE

UNITED STATES DEPARTMENT OF COMMERCE
United States Patent and Trademark Office
Address: COMMISSIONER FOR PATENTS
P.O. Box 1450
Alexandria, Virginia 22313-1450
www.uspto.gov

BRACEWELL & GIULIANI LLP
P.O. BOX 61389
HOUSTON, TX 77208-1389

Mail Date: 04/20/2010

Applicant	: Harold Woodruff Tomlinson JR.	: DECISION ON REQUEST FOR
Patent Number	: 7654148	: RECALCULATION of PATENT
Issue Date	: 02/02/2010	: TERM ADJUSTMENT IN VIEW
Appliction No	: 11/417,421	: OF WYETH AND NOTICE OF INTENT TO
Filed	: 05/04/2006	: ISSUE CERTIFICATE OF CORRECTION
		:

The Request for Recalculation is **GRANTED** to the extent indicated.

The patent term adjustment has been determined to be **596** days. The USPTO will *sua sponte* issue a certificate of correction reflecting the amount of PTA days determined by the recalculation.

Prior to the issuance of the certificate of correction, the USPTO will afford patentee an opportunity to be heard and request reconsideration. Accordingly, patentee has **one month or thirty (30) days**, whichever is longer, to file a request for reconsideration of this patent term adjustment calculation. See 35 U.S.C. 154(b)(3)(B)(ii) and 37 CFR 1.322(a)(4). No extensions of time will be granted under 37 CFR 1.136.

Patentee should use document code PET.OP if electronically filing a request for reconsideration of this patent term adjustment calculation. The patentee must also include the information required by 37 CFR 1.705(b)(2) and the fee required by 37 CFR 1.18(e). If patentee does not file a timely request for reconsideration of this patent term adjustment calculation including the information required by 37 CFR 1.705(b)(2) and the fee required by 37 CFR 1.18(e), the USPTO will issue a certificate of correction reflecting the PTA determination noted above.

Patentee should be aware that in order to preserve the right to review in the United States District Court for the District of Columbia of the USPTO patent term adjustment determination, patentee must ensure that he or she also take the steps required under 35 U.S.C. 154(b)(4)(A) in a timely manner. Nothing in the request for recalculation should be construed as providing an alternative time frame for commencing a civil action under 35 U.S.C. 154(b)(4)(A).

Any questions concerning this decision should be directed to the Office of Patent Legal Administration at 571-272-7702.

SPE RESPONSE FOR CERTIFICATE OF CORRECTION

Paper No.: _____

DATE : 07/20/09

TO SPE OF : ART UNIT 2873

SUBJECT : Request for Certificate of Correction for Appl. No.: 11417431 Patent No.: 7349139 B2

Please respond to this request for a certificate of correction within 7 days.

FOR IFW FILES:

Please review the requested changes/corrections as shown in the **COCIN** document(s) in the IFW application image. No new matter should be introduced, nor should the scope or meaning of the claims be changed.

Please complete the response (see below) and forward the completed response to scanning using document code **COCX**.

FOR PAPER FILES:

Please review the requested changes/corrections as shown in the attached certificate of correction. Please complete this form (see below) and forward it with the file to:

Certificates of Correction Branch (C of C)
Randolph Square 9D40-D
Palm Location 7580

You can fax the Directors/SPE response to 571-270-9990

Lamonte Newsome
Certificates of Correction Branch
703-756-1574

Thank You For Your Assistance

The request for issuing the above-identified correction(s) is hereby:
Note your decision on the appropriate box.

- ☒ **Approved** — All changes apply.
- ☐ **Approved in Part** — Specify below which changes **do not** apply.
- ☐ **Denied** — State the reasons for denial below.

Comments:_____

/Ricky Mack/ — SPE
2873 — Art Unit

UNITED STATES PATENT AND TRADEMARK OFFICE

Commissioner for Patents
United States Patent and Trademark Office
P.O. Box 1450
Alexandria, VA 22313-1450
www.uspto.gov

Thelen Reid Brown Raysman
& Steiner, LLP
P.O. Box 640640
San Jose, CA 95164-0640

COPY MAILED

SEP 02 2008

In re Application of	:	
Cong Nguyen et al.	:	
Application No. 11/417,433	:	DECISION ON PETITION
Filed: May 3, 2006	:	TO WITHDRAW
Attorney Docket No. 650007-2	:	FROM RECORD
	:	

This is a decision on the Request to Withdraw as attorney or agent of record under 37 C.F.R. § 1.36(b), filed August 8, 2008.

The request is **APPROVED**.

A grantable request to withdraw as attorney/agent of record must be signed by every attorney/agent seeking to withdraw or contain a clear indication that one attorney is signing on behalf of another/others. The Office requires the practitioner(s) requesting withdrawal to certify that he, she, or they have: (1) given reasonable notice to the client, prior to the expiration of the response period, that the practitioner(s) intends to withdraw from employment; (2) delivered to the client or a duly authorized representative of the client all papers and property (including funds) to which the client is entitled; and (3) notified the client of any responses that may be due and the time frame within which the client must respond, pursuant 37 CFR 10.40(c).

The request was signed by David B. Ritchie on behalf of all attorneys/agents associated with customer number 58773.

All attorneys/agents associated with customer number 58773 have been withdrawn.

Applicant is reminded that there is no attorney of record at this time.

The request to change the correspondence of record is not acceptable as the requested correspondence address is not that of (1) the first named signing inventor; or (2) an intervening assignee of the entire interest under 37 C.F.R. 3.71. Accordingly, all correspondence will be mailed to the first signing inventor at the address noted on the oath and declaration, since no assignee has properly intervened in this application. A courtesy copy of this decision will be mailed to address as indicated in the request to withdraw. If this firm would like to receive future correspondence, the proper power of attorney documents must be submitted or if an assignee has intervened compliance with 37 CFR 3.73(b) must be satisfied.

Telephone inquiries concerning this decision should be directed to Kimberly Inabinet at 571-272-4618.

Kimberly Inabinet
Petitions Examiner
Office of Petitions

cc: Nguyen Cong
202 Calvert Drive
Suite 252
Cupertino, CA 95014

cc: Renesas Technology America, Inc.
c/o Song Zhu
Squire, Sanders & Dempsey, LLP
One Maritime Plaza, Suite 300
San Francisco, CA 94111

UNITED STATES PATENT AND TRADEMARK OFFICE

UNITED STATES DEPARTMENT OF COMMERCE
United States Patent and Trademark Office
Address: COMMISSIONER FOR PATENTS
P.O. Box 1450
Alexandria, Virginia 22313-1450
www.uspto.gov

APPLICATION NUMBER	FILING OR 371(C) DATE	FIRST NAMED APPLICANT	ATTY. DOCKET NO./TITLE
11/417,433	05/03/2006	Cong Nguyen	650007-2

CONFIRMATION NO. 8461

POWER OF ATTORNEY NOTICE

58773
THELEN REID BROWN RAYSMAN & STEINER LLP
P.O. Box 640640
SAN JOSE, CA 95164-0640

OC000000031854051

Date Mailed: 09/02/2008

NOTICE REGARDING CHANGE OF POWER OF ATTORNEY

This is in response to the Power of Attorney filed 08/08/2008.

- The withdrawal as attorney in this application has been accepted. Future correspondence will be mailed to the new address of record. 37 CFR 1.33.

/kainabinet/

Office of Data Management, Application Assistance Unit (571) 272-4000, or (571) 272-4200, or 1-888-786-0101

UNITED STATES PATENT AND TRADEMARK OFFICE

Commissioner for Patents
United States Patent and Trademark Office
P.O. Box 1450
Alexandria, VA 22313-1450
www.uspto.gov

KNOBBE MARTENS OLSON & BEAR LLP
2040 MAIN STREET
FOURTEENTH FLOOR
IRVINE CA 92614

COPY MAILED

DEC 1 0 2007

OFFICE OF PETITIONS

In re Application of	:
Schlienger, Nathalie	:
Application No. 11/417,439	: DECISION GRANTING PETITION
Filed: May 3, 2006	: UNDER 37 CFR 1.78(a)(3)
Attorney Docket No. ACADIA.019DV3	:

This is a decision on the petition under 37 CFR 1.78(a)(3), filed October 26, 2007, to accept an unintentionally delayed claim under 35 U.S.C. § 120 for the benefit of priority to the prior-filed nonprovisional application set forth in the amendment filed concurrently with the instant petition.

The petition is **GRANTED**.

A petition for acceptance of a claim for late priority under 37 CFR 1.78(a)(3) is only applicable to those applications filed on or after November 29, 2000. Further, the petition is appropriate only after the expiration of the period specified in 37 CFR 1.78(a)(2)(ii). In addition, the petition under 37 CFR 1.78(a)(3) must be accompanied by:

(1) the reference required by 35 U.S.C. § 120 and 37 CFR 1.78(a)(2)(i) of the prior-filed application, unless previously submitted;
(2) the surcharge set forth in § 1.17(t); and
(3) a statement that the entire delay between the date the claim was due under 37 CFR 1.78(a)(2)(ii) and the date the claim was filed was unintentional. The Commissioner may require additional information where there is a question whether the delay was unintentional.

The instant nonprovisional application was filed after November 29, 2000, and the claim herein for the benefit of priority to the prior-filed nonprovisional application is submitted after expiration of the period specified by 37 CFR 1.78(a)(2)(ii). Therefore, this is a proper petition under 37 CFR 1.78(a)(3).

The petition complies with the requirements for a grantable petition under 37 CFR 1.78(a)(3) in that (1) a reference to the prior-filed nonprovisional application has been included in an amendment to the first sentence of the specification following the title, as provided by 37 CFR 1.78(a)(2)(iii); (2) the surcharge fee required by 37 CFR 1.17(t) has been submitted; and (3) the petition contains a proper statement of unintentional delay. Accordingly, having found that the instant petition for acceptance of an unintentionally delayed claim for the benefit of priority under 35 U.S.C. § 120 to the prior-filed nonprovisional application satisfies the conditions of 37 CFR 1.78(a)(3), the petition is granted.

The granting of the petition to accept the delayed benefit claim to the prior-filed application under 37 CFR 1.78(a)(3) should not be construed as meaning that the instant application is entitled to the benefit of the prior-filed application. In order for the instant application to be entitled to the benefit of the prior-filed application, all other requirements under 35 U.S.C. § 120 and 37 CFR 1.78(a)(1) and (a)(2) must be met. Similarly, the fact that the corrected Filing Receipt accompanying this decision on petition includes the prior-filed application should not be construed as meaning that applicant is entitled to the claim for benefit of priority to the prior-filed application noted thereon. Accordingly, the examiner will, in due course, consider this benefit claim and determine whether the instant application is entitled to the benefit of the earlier filing date.

A corrected Filing Receipt, which includes the priority claim to the prior-filed nonprovisional application, accompanies this decision on petition.

Any inquiries concerning this decision may be directed to the undersigned at (571) 272-3282.

This matter is being referred to Technology Center Art Unit 1624 for appropriate action on the amendment filed October 26, 2007, including consideration by the examiner of applicant's entitlement to claim benefit of priority under 35 U.S.C. § 120 to the prior-filed nonprovisional applications.

Liana Walsh
Petitions Examiner
Office of Petitions

ATTACHMENT: Corrected Filing Receipt

UNITED STATES PATENT AND TRADEMARK OFFICE

UNITED STATES DEPARTMENT OF COMMERCE
United States Patent and Trademark Office
Address: COMMISSIONER FOR PATENTS
P.O. Box 1450
Alexandria, Virginia 22313-1450
www.uspto.gov

APPLICATION NUMBER	FILING or 371(c) DATE	GRP ART UNIT	FIL FEE REC'D	ATTY.DOCKET.NO	TOT CLAIMS	IND CLAIMS
11/417,439	05/03/2006	1624	1750	ACADIA.019DV3	19	1

CONFIRMATION NO. 8439

CORRECTED FILING RECEIPT

20995
KNOBBE MARTENS OLSON & BEAR LLP
2040 MAIN STREET
FOURTEENTH FLOOR
IRVINE, CA 92614

OC000000027155014

Date Mailed: 12/10/2007

Receipt is acknowledged of this non-provisional patent application. The application will be taken up for examination in due course. Applicant will be notified as to the results of the examination. Any correspondence concerning the application must include the following identification information: the U.S. APPLICATION NUMBER, FILING DATE, NAME OF APPLICANT, and TITLE OF INVENTION. Fees transmitted by check or draft are subject to collection. Please verify the accuracy of the data presented on this receipt. **If an error is noted on this Filing Receipt, please write to the Office of Initial Patent Examination's Filing Receipt Corrections. Please provide a copy of this Filing Receipt with the changes noted thereon. If you received a "Notice to File Missing Parts" for this application, please submit any corrections to this Filing Receipt with your reply to the Notice. When the USPTO processes the reply to the Notice, the USPTO will generate another Filing Receipt incorporating the requested corrections**

Applicant(s)

Nathalie Schlienger, Frederiksberg, DENMARK;

Power of Attorney: The patent practitioners associated with Customer Number 20995

Domestic Priority data as claimed by applicant

This application is a CON of 11/154,083 06/16/2005 PAT 7,217,719
which is a DIV of 10/329,719 12/23/2002 PAT 6,911,452
which claims benefit of 60/344,750 12/28/2001

Foreign Applications

If Required, Foreign Filing License Granted: 06/01/2006

The country code and number of your priority application, to be used for filing abroad under the Paris Convention, is **US 11/417,439**

Projected Publication Date: Not Applicable

Non-Publication Request: No

Early Publication Request: No

Title

Spiroazacyclic compounds as monoamine receptor modulators

Preliminary Class

514

PROTECTING YOUR INVENTION OUTSIDE THE UNITED STATES

Since the rights granted by a U.S. patent extend only throughout the territory of the United States and have no effect in a foreign country, an inventor who wishes patent protection in another country must apply for a patent in a specific country or in regional patent offices. Applicants may wish to consider the filing of an international application under the Patent Cooperation Treaty (PCT). An international (PCT) application generally has the same effect as a regular national patent application in each PCT-member country. The PCT process **simplifies** the filing of patent applications on the same invention in member countries, but **does not result** in a grant of "an international patent" and does not eliminate the need of applicants to file additional documents and fees in countries where patent protection is desired.

Almost every country has its own patent law, and a person desiring a patent in a particular country must make an application for patent in that country in accordance with its particular laws. Since the laws of many countries differ in various respects from the patent law of the United States, applicants are advised to seek guidance from specific foreign countries to ensure that patent rights are not lost prematurely.

Applicants also are advised that in the case of inventions made in the United States, the Director of the USPTO must issue a license before applicants can apply for a patent in a foreign country. The filing of a U.S. patent application serves as a request for a foreign filing license. The application's filing receipt contains further information and guidance as to the status of applicant's license for foreign filing.

Applicants may wish to consult the USPTO booklet, "General Information Concerning Patents" (specifically, the section entitled "Treaties and Foreign Patents") for more information on timeframes and deadlines for filing foreign patent applications. The guide is available either by contacting the USPTO Contact Center at 800-786-9199, or it can be viewed on the USPTO website at http://www.uspto.gov/web/offices/pac/doc/general/index.html.

For information on preventing theft of your intellectual property (patents, trademarks and copyrights), you may wish to consult the U.S. Government website, http://www.stopfakes.gov. Part of a Department of Commerce initiative, this website includes self-help "toolkits" giving innovators guidance on how to protect intellectual property in specific countries such as China, Korea and Mexico. For questions regarding patent enforcement issues, applicants may call the U.S. Government hotline at 1-866-999-HALT (1-866-999-4158).

LICENSE FOR FOREIGN FILING UNDER

Title 35, United States Code, Section 184

Title 37, Code of Federal Regulations, 5.11 & 5.15

GRANTED

The applicant has been granted a license under 35 U.S.C. 184, if the phrase "IF REQUIRED, FOREIGN FILING LICENSE GRANTED" followed by a date appears on this form. Such licenses are issued in all applications where the conditions for issuance of a license have been met, regardless of whether or not a license may be required as

set forth in 37 CFR 5.15. The scope and limitations of this license are set forth in 37 CFR 5.15(a) unless an earlier license has been issued under 37 CFR 5.15(b). The license is subject to revocation upon written notification. The date indicated is the effective date of the license, unless an earlier license of similar scope has been granted under 37 CFR 5.13 or 5.14.

This license is to be retained by the licensee and may be used at any time on or after the effective date thereof unless it is revoked. This license is automatically transferred to any related applications(s) filed under 37 CFR 1.53(d). This license is not retroactive.

The grant of a license does not in any way lessen the responsibility of a licensee for the security of the subject matter as imposed by any Government contract or the provisions of existing laws relating to espionage and the national security or the export of technical data. Licensees should apprise themselves of current regulations especially with respect to certain countries, of other agencies, particularly the Office of Defense Trade Controls, Department of State (with respect to Arms, Munitions and Implements of War (22 CFR 121-128)); the Bureau of Industry and Security, Department of Commerce (15 CFR parts 730-774); the Office of Foreign AssetsControl, Department of Treasury (31 CFR Parts 500+) and the Department of Energy.

NOT GRANTED

No license under 35 U.S.C. 184 has been granted at this time, if the phrase "IF REQUIRED, FOREIGN FILING LICENSE GRANTED" DOES NOT appear on this form. Applicant may still petition for a license under 37 CFR 5.12, if a license is desired before the expiration of 6 months from the filing date of the application. If 6 months has lapsed from the filing date of this application and the licensee has not received any indication of a secrecy order under 35 U.S.C. 181, the licensee may foreign file the application pursuant to 37 CFR 5.15(b).

UNITED STATES PATENT AND TRADEMARK OFFICE

Commissioner for Patents
United States Patent and Trademark Office
P.O. Box 1450
Alexandria, VA 22313-1450
www.uspto.gov

KNOBBE MARTENS OLSON & BEAR
2040 MAIN STREET
FOURTEENTH FLOOR
IRVINE, CA 92614

COPY MAILED
JUL 0 7 2006
OFFICE OF PETITIONS

In re Application of	:	
Lawrence Kates	:	
Application No. 11/417,443	:	DECISION ON PETITION
Filed: May 3, 2006	:	TO MAKE SPECIAL UNDER
Attorney Docket No. KATES.015DV1	:	37 CFR 1.102(c)(1)

This is a decision on the petition under 37 CFR 1.102(c)(1), filed May 24, 2006, to make the above-identified application special based on applicant's age as set forth in M.P.E.P. § 708.02, Section IV.

The petition is **GRANTED**.

A grantable petition to make an application special under 37 CFR 1.102(c)(1) and MPEP § 708.02, Section IV: Applicant's Age must be accompanied by evidence showing that at least one of the applicants is 65 years of age, or more, such as a birth certificate or a statement by applicant. No fee is required.

The petition includes a statement by Lawrence Kates attesting that he is over 65 years of age. Accordingly, the above-identified application has been accorded "special" status.

Telephone inquiries concerning this decision should be directed to Wan Laymon at 571-272-3220.

All other inquiries concerning either the examination or status of the application should be directed to the Technology Center.

This application is being referred to Technology Center AU 3644 for action on the merits commensurate with this decision.

Wan Laymon
Wan Laymon
Petitions Examiner
Office of Petitions

UNITED STATES PATENT AND TRADEMARK OFFICE

Commissioner for Patents
United States Patent and Trademark Office
P.O. Box 1450
Alexandria, VA 22313-1450
www.uspto.gov

SAWYER LAW GROUP LLP
2465 E. BAYSHORE ROAD, SUITE NO. 406
PALO ALTO CA 94303

MAILED

MAR 17 2009

OFFICE OF PETITIONS

In re Application of :
John Durbin HUSHER :
Application No. 11/417,457 : DECISION ON PETITION
Filed: May 4, 2006 :
Docket No. M068-D/2638D :

This is a decision on the petition under the unintentional provisions of 37 CFR 1.137(b), filed January 28, 2009, to revive the above-identified application.

The petition is **GRANTED**.

The application became abandoned for failure to reply in a timely manner to the non-final Office action mailed, April 15, 2008, which set a shortened statutory period for reply of three (3) months. No extensions of time under the provisions of 37 CFR 1.136(a) were obtained. Accordingly, the application became abandoned on July 16, 2008.

The petition satisfies the requirements of 37 CFR 1.137(b) in that petitioner has supplied (1) the reply in the form of an amendment, (2) the petition fee of $1620; and (3) the required statement of unintentional delay.

Telephone inquiries concerning this decision should be directed to Diane Goodwyn at (571) 272-6735.

This application is being referred to Technology Center AU 2814 for appropriate action by the Examiner in the normal course of business on the reply received January 28, 2009.

Thurman Page
Petitions Examiner
Office of Petitions

UNITED STATES PATENT AND TRADEMARK OFFICE

UNITED STATES DEPARTMENT OF COMMERCE
United States Patent and Trademark Office
Address: COMMISSIONER FOR PATENTS
P.O. Box 1450
Alexandria, Virginia 22313-1450
www.uspto.gov

MACMILLAN SOBANSKI & TODD, LLC
ONE MARITIME PLAZA FIFTH FLOOR
720 WATER STREET
TOLEDO, OH 43604-1619

Mail Date: 04/21/2010

Applicant	: Wayne T. Mansell	: DECISION ON REQUEST FOR
Patent Number	: 7668634	: RECALCULATION of PATENT
Issue Date	: 02/23/2010	: TERM ADJUSTMENT IN VIEW
Appliction No	: 11/417,459	: OF WYETH AND NOTICE OF INTENT TO
Filed	: 05/03/2006	: ISSUE CERTIFICATE OF CORRECTION
		:

The Request for Recalculation is **GRANTED** to the extent indicated.

The patent term adjustment has been determined to be **201** days. The USPTO will *sua sponte* issue a certificate of correction reflecting the amount of PTA days determined by the recalculation.

Prior to the issuance of the certificate of correction, the USPTO will afford patentee an opportunity to be heard and request reconsideration. Accordingly, patentee has **one month or thirty (30) days**, whichever is longer, to file a request for reconsideration of this patent term adjustment calculation. See 35 U.S.C. 154(b)(3)(B)(ii) and 37 CFR 1.322(a)(4). No extensions of time will be granted under 37 CFR 1.136.

Patentee should use document code PET.OP if electronically filing a request for reconsideration of this patent term adjustment calculation. The patentee must also include the information required by 37 CFR 1.705(b)(2) and the fee required by 37 CFR 1.18(e). If patentee does not file a timely request for reconsideration of this patent term adjustment calculation including the information required by 37 CFR 1.705(b)(2) and the fee required by 37 CFR 1.18(e), the USPTO will issue a certificate of correction reflecting the PTA determination noted above.

Patentee should be aware that in order to preserve the right to review in the United States District Court for the District of Columbia of the USPTO patent term adjustment determination, patentee must ensure that he or she also take the steps required under 35 U.S.C. 154(b)(4)(A) in a timely manner. Nothing in the request for recalculation should be construed as providing an alternative time frame for commencing a civil action under 35 U.S.C. 154(b)(4)(A).

Any questions concerning this decision should be directed to the Office of Patent Legal Administration at 571-272-7702.

UNITED STATES PATENT AND TRADEMARK OFFICE

Commissioner for Patents
United States Patent and Trademark Office
P.O. Box 1450
Alexandria, VA 22313-1450
www.uspto.gov

E I DU PONT DE NEMOURS AND COMPANY
LEGAL PATENT RECORDS CENTER
BARLEY MILL PLAZA 25/1128
4417 LANCASTER PIKE
WILMINGTON DE 19805

COPY MAILED

OCT 12 2007

OFFICE OF PETITIONS

In re Application of :
Lee, et al. :
Application No. 11/417,469 :
Filed: May 4, 2006 :
Attorney Docket No. EL0599USCIP :
For: BLACK CONDUCTIVE THICK FILM COMPOSITIONS, BLACK ELECTRODES, AND METHODS OF FORMING THEREOF

ON PETITION

This is a decision on the petition, filed June 20, 2007, under 37 CFR 1.137(b) to revive the above-identified application.

The petition is **GRANTED**.

The above-identified application became abandoned for failure to timely submit a reply within three (3) months of the mailing of the December 14, 2006 non-final Office action. No response being received and no proper extensions of time being obtained under the provisions of 37 CFR 1.136(a), this application became abandoned on March 15, 2007.

Applicants have submitted an amendment and two terminal disclaimers in reply to the December 14, 2006 non-final Office action, a proper statement of the unintentional nature of the delay in responding to the December 14, 2006 non-final Office action, and the $1,500.00 petition fee.

All of the requirements under 37 CFR 1.137(b) being met, the petition is granted.

Pursuant to 37 CFR 1.136, an extension of time must be filed prior to the expiration of the maximum period obtainable for reply to avoid abandonment. Accordingly, since the $1,020.00 extension of time submitted with the petition on June 20, 2007 was submitted subsequent to the maximum period obtainable for reply, this fee is unnecessary and will be credited to petitioners' deposit account.

After the mailing of this decision, the application will be returned to Technology Center AU 1796 for consideration of the amendment and terminal disclaimers filed on June 20, 2007.

Telephone inquiries should be directed to the undersigned at (571) 272-3230.

Shirene Willis Brantley

Shirene Willis Brantley
Senior Petitions Attorney
Office of Petitions

UNITED STATES PATENT AND TRADEMARK OFFICE

Commissioner for Patents
United States Patent and Trademark Office
P.O. Box 1450
Alexandria, VA 22313-1450
www.uspto.gov

Robert Berliner
BERLINER & ASSOCIATES
555 West Fifth Street
Thirty-First Floor
Los Angeles, CA 90013

COPY MAILED
DEC 13 2006
OFFICE OF PETITIONS

In re Application of	:	
Hansma, et al.	:	
Application No. 11/417,494	:	DECISION GRANTING PETITION
Filed: May 4, 2006	:	
Attorney Docket No. 1279-439	:	

This is a decision on the petition filed October 19, 2006, under 37 CFR 1.10(c) requesting that the above-cited application be accorded a filing date of May 4, 2006, rather than the presently accorded filing date of May 5, 2006.

Petitioner alleges that the application was deposited with the Express Mail Service on May 4, 2006. In support of the allegation, the petition is accompanied by a copy of the Express Mail tracking sheet with a tracking number ER076255972US showing a "date-in" of May 4, 2006. The tracking number cited is the same number found on the application transmittal sheet that accompanied the original application papers. The evidence is convincing that the application papers were deposited on May 4, 2006.

In view of the above, the petition is granted. The new filing date for the above-cited application is May 4, 2006.

The Office of Initial Patent Examination will further process the application with a filing date of May 4, 2006, and issue a corrected filing receipt.

Any inquiries related to this decision should be directed to the undersigned at (571)272-3222.

Kenya A. McLaughlin
Petitions Attorney
Office of Petitions

UNITED STATES PATENT AND TRADEMARK OFFICE

Commissioner for Patents
United States Patent and Trademark Office
P.O. Box 1450
Alexandria, VA 22313-1450
www.uspto.gov

MBHB/TRADING TECHNOLOGIES
300 SOUTH WACKER DRIVE
SUITE 3200
CHICAGO, IL 60606

MAILED

OCT 22 2009

OFFICE OF PETITIONS

In re Application of	:	
Richard W. Friesen, et al.	:	
Application No. 11/417,515	:	DECISION GRANTING PETITION
Filed: May 3, 2006	:	UNDER 37 CFR 1.313(c)(2)
Attorney Docket No. 03-1106-Z4	:	

This is a decision on the petition under 37 CFR 1.313(c)(2), filed October 21, 2009, to withdraw the above-identified application from issue after payment of the issue fee.

The petition is **GRANTED**.

The above-identified application is withdrawn from issue for consideration of a submission under 37 CFR 1.114 (request for continued examination). *See* 37 CFR 1.313(c)(2).

Petitioner is advised that the issue fee paid on October 15, 2009 cannot be refunded. If, however, this application is again allowed, petitioner may request that it be applied towards the issue fee required by the new Notice of Allowance.[1]

Telephone inquiries regarding this decision should be directed to undersigned at (571) 272-1642. All other inquiries regarding the examination or status of this application should be directed to the Technology Center.

This application is being referred to Technology Center AU 3693 for processing of the request for continued examination under 37 CFR 1.114 and for consideration of the concurrently filed information disclosure statement.

/AMW/
April M. Wise
Petitions Examiner
Office of Petitions

---

[1] *The request to apply the issue fee to the new Notice may be satisfied by completing and returning the new Part B – Fee(s) Transmittal Form (along with any balance due at the time of submission). Petitioner is advised that the Issue Fee Transmittal Form* ***must*** *be completed and timely submitted to avoid abandonment of the application.*

UNITED STATES PATENT AND TRADEMARK OFFICE

UNITED STATES DEPARTMENT OF COMMERCE
United States Patent and Trademark Office
Address: COMMISSIONER FOR PATENTS
P.O. Box 1450
Alexandria, Virginia 22313-1450
www.uspto.gov

APPLICATION NO.	FILING DATE	FIRST NAMED INVENTOR	ATTORNEY DOCKET NO.	CONFIRMATION NO.
11/417,534	05/03/2006	Harris Brumfield	02-242-Z1	8138

39310 7590 05/09/2008
MBHB/TRADING TECHNOLOGIES
300 SOUTH WACKER DRIVE
SUITE 3200
CHICAGO, IL 60606

EXAMINER
WEISBERGER, RICHARD C

ART UNIT	PAPER NUMBER
3693	

MAIL DATE	DELIVERY MODE
05/09/2008	PAPER

Please find below and/or attached an Office communication concerning this application or proceeding.

The time period for reply, if any, is set in the attached communication.

UNITED STATES PATENT AND TRADEMARK OFFICE

Commissioner for Patents
United States Patent and Trademark Office
P.O. Box 1450
Alexandria, VA 22313-1450
www.uspto.gov

MAILED
FROM DIRECTORS OFFICE
MAY 08 2008
TECHNOLOGY CENTER 3600

MBHB/Trading Technologies
300 South Wacker Drive
Suite 3200
Chicago, IL 60606

In re Application of:
Harris Brumfield et al.
Application No. 11/417,534
Filed: May 3, 2006
For: **SYSTEM AND METHOD FOR TRADING AND DISPLAYING MARKET INFORMATION IN AN ELECTRONIC TRADING ENVIRONMENT**

DECISION ON PETITION TO EXPUNGE FILED UNDER 37 CFR 1.59

This decision is in response to the petition filed on January 22, 2008 under 37 CFR 1.59 requesting to expunge the Information Disclosure Statement (IDS) mailed and placed in the file on April 26, 2007.

The petition is **GRANTED**.

Applicant alleges that "this Information Disclosure Sheet has a Serial Number 10/403,881...and concerns a different application."

A review of the record reveals that the Examiner considered an IDS with Serial Number 10/403,881 on April 26, 2007. Additionally, a Notice of Allowance was mailed in this application on January 29, 2008.

The IDS considered on April 26, 2007 has been incorrectly entered into this application by the Examiner. Accordingly, the considered Information Disclosure Statement dated April 26, 2007 is expunged from the case.

Telephone inquiries should be directed to James A. Kramer, Supervisory Patent Examiner, at (571) 272-6783.

Kathy Matecki
for Wynn Coggins, Director
Patent Technology Center 3600
(571) 272-5350

JK/tl: 4/28/08

UNITED STATES PATENT AND TRADEMARK OFFICE

Commissioner for Patents
United States Patent and Trademark Office
P.O. Box 1450
Alexandria, VA 22313-1450
www.uspto.gov

MBHB/TRADING TECHNOLOGIES
300 SOUTH WACKER DRIVE
SUITE 3200
CHICAGO IL 60606

MAILED

MAR 29 2010

OFFICE OF PETITIONS

In re Patent No. 7,620,587 :
Duquette :
Issue Date: November 17, 2009 :
Application No. 11/417,540 :
Filed: May 3, 2006 :
Atty Docket No. 05-1124-Z1 :

ON APPLICATION FOR
PATENT TERM ADJUSTMENT

This is in response to the REQUEST FOR RECONSIDERATION OF PATENT TERM ADJUSTMENT, filed November 3, 2009. Applicant submits that the correct patent term adjustment to be indicated on the patent is four hundred (400) days, not three hundred twenty-nine (329) days as calculated by the Office as of the mailing of the initial determination of patent term adjustment. Applicant requests this correction solely on the basis that the Office will take in excess of three years to issue this patent.

As the instant application for patent term adjustment requests reconsideration of the patent term adjustment as it relates to the Office's failure to issue the patent within 3 years of the filing date, the application for patent term adjustment under 37 CFR 1.705(b) is **DISMISSED as PREMATURE**.

The instant petition was filed on November 3, 2009, prior to the November 17, 2009 issuance of the patent. Knowledge of the actual date the patent issues is required to calculate the amount, if any, of additional patent term patentee is entitled to for Office failure to issue the patent within 3 years. See § 1.702(b). The computer will not undertake the § 1.702(b) calculation until the actual date of issuance of the patent has been determined. Likewise, the computer will not calculate any further Office delay under § 1.702(a)(4) or applicant delay under § 1.704(c)(10) until the actual date of issuance of the patent has been determined. As such, the Office could not make

a determination on the correctness of the patent term adjustment until the patent issued.

Requesting reconsideration of the patent term adjustment to be indicated on the patent under 37 CFR 1.705(b) based on the initial determination of patent term adjustment and a projected issuance date of the patent is premature. Accordingly, it is appropriate to dismiss as premature such a request.

The Office acknowledges submission of the $200.00 fee set forth in 37 CFR 1.18(e) for consideration of the application for patent term adjustment under 37 CFR 1.705(b).

The Office acknowledges receipt of a Request for Recalculation of Patent Term Adjustment in View of Wyeth, filed February 10, 2010. This request will be considered in due course.

Telephone inquiries specific to this decision should be directed to Senior Petitions Attorney Shirene Willis Brantley at (571) 272-3230.

Anthony Knight
Supervisor
Office of Petitions

UNITED STATES PATENT AND TRADEMARK OFFICE

UNITED STATES DEPARTMENT OF COMMERCE
United States Patent and Trademark Office
Address: COMMISSIONER FOR PATENTS
P.O. Box 1450
Alexandria, Virginia 22313-1450
www.uspto.gov

MBHB/TRADING TECHNOLOGIES
300 SOUTH WACKER DRIVE
SUITE 3200
CHICAGO, IL 60606

Mail Date: 04/20/2010

Applicant	: Douglas Ray Duquette	: DECISION ON REQUEST FOR
Patent Number	: 7620587	: RECALCULATION of PATENT
Issue Date	: 11/17/2009	: TERM ADJUSTMENT IN VIEW
Appliction No	: 11/417,540	: OF WYETH AND NOTICE OF INTENT TO
Filed	: 05/03/2006	: ISSUE CERTIFICATE OF CORRECTION
		:

The Request for Recalculation is **GRANTED** to the extent indicated.

The patent term adjustment has been determined to be **461** days. The USPTO will *sua sponte* issue a certificate of correction reflecting the amount of PTA days determined by the recalculation.

Prior to the issuance of the certificate of correction, the USPTO will afford patentee an opportunity to be heard and request reconsideration. Accordingly, patentee has **one month or thirty (30) days**, whichever is longer, to file a request for reconsideration of this patent term adjustment calculation. See 35 U.S.C. 154(b)(3)(B)(ii) and 37 CFR 1.322(a)(4). No extensions of time will be granted under 37 CFR 1.136.

Patentee should use document code PET.OP if electronically filing a request for reconsideration of this patent term adjustment calculation. The patentee must also include the information required by 37 CFR 1.705(b)(2) and the fee required by 37 CFR 1.18(e). If patentee does not file a timely request for reconsideration of this patent term adjustment calculation including the information required by 37 CFR 1.705(b)(2) and the fee required by 37 CFR 1.18(e), the USPTO will issue a certificate of correction reflecting the PTA determination noted above.

Patentee should be aware that in order to preserve the right to review in the United States District Court for the District of Columbia of the USPTO patent term adjustment determination, patentee must ensure that he or she also take the steps required under 35 U.S.C. 154(b)(4)(A) in a timely manner. Nothing in the request for recalculation should be construed as providing an alternative time frame for commencing a civil action under 35 U.S.C. 154(b)(4)(A).

Any questions concerning this decision should be directed to the Office of Patent Legal Administration at 571-272-7702.

UNITED STATES PATENT AND TRADEMARK OFFICE

COMMISSIONER FOR PATENTS
UNITED STATES PATENT AND TRADEMARK OFFICE
P.O. BOX 1450
ALEXANDRIA, VA 22313-1450
www.uspto.gov

Paper No.

MBHB/TRADING TECHNOLOGIES
300 SOUTH WACKER DRIVE
SUITE 3200
CHICAGO IL 60606

COPY MAILED
DEC 22 2008

In re Application of	:	
Brumfield et al.	:	ON APPLICATION
Application No. 11/417,543	:	FOR
Filed: May 3, 2006	:	PATENT TERM ADJUSTMENT
Attorney Docket No. 02-211-Z3	:	

This is in response to the REQUEST TO CORRECT THE PATENT TERM ADJUSTMENT CALCULATION filed September 9, 2008. Applicants request that the initial determination of patent term adjustment under 35 U.S.C. 154(b) be changed from zero (0) days to fifty-seven (57) days.

The request is **DISMISSED**.

Applicants are advised that § 1.705(b) provides the avenue before the Office for requesting reconsideration of the patent term adjustment indicated in the notice of allowance. See § 1.702-1.705. Moreover, § 1.705(b) provides that:

> An application for patent term adjustment under this section must be filed no later than the payment of the issue fee but may not be filed earlier than the date of mailing of the notice of allowance. An application for patent term adjustment under this section must be accompanied by:
>
> (1) The fee set forth in § 1.18(e) ...

The instant application for patent term adjustment was filed after the mailing of the notice of allowance and with payment of

the issue fee. Thus, the application for patent term adjustment was timely filed. However, neither the fee under § 1.18(e) nor a general authorization to charge any required fees, accompanied the application for patent term adjustment. Accordingly, the request is dismissed for failure to comply with the requirement of paragraph (b)(1) to submit the fee under §1.18(e). Applicant is not precluded from promptly paying the required fee for consideration of this application for patent term adjustment. Applicant should call the undersigned upon submission of such fee.

The Office of Data Management has been advised of this decision and directed to go forward with processing of this application into a patent.

Telephone inquiries specific to this matter should be directed to the undersigned at (571) 272-3219.

Nancy Johnson
Senior Petitions Attorney
Office of Petitions
Office of Deputy Commissioner
for Patent Examination Policy

UNITED STATES PATENT AND TRADEMARK OFFICE

COMMISSIONER FOR PATENTS
UNITED STATES PATENT AND TRADEMARK OFFICE
P.O. BOX 1450
ALEXANDRIA, VA 22313-1450
www.uspto.gov

Paper No.

MBHB/TRADING TECHNOLOGIES
300 SOUTH WACKER DRIVE
SUITE 3200
CHICAGO IL 60606

COPY MAILED

FEB 05 2009

OFFICE OF PETITIONS

In re Application of	:	
Brumfield et al.	:	DECISION ON APPLICATION
Application No. 11/417,543	:	FOR
Filed: May 3, 2006	:	PATENT TERM ADJUSTMENT
Atty Docket No. 02-211-Z3	:	

This is a decision on the REQUEST TO CORRECT THE PATENT TERM ADJUSTMENT CALCULATION filed September 9, 2008. This decision is made in light of the RESPONSE TO THE DISMISSAL OF APPLICANTS' PETITION TO CORRECT PATENT TERM ADJUSTMENT filed January 30, 2009. Applicants request that the initial determination of patent term adjustment under 35 U.S.C. 154(b) be corrected from zero (0) days to fifty-seven (57) days.

The request for review of the initial determination of patent term adjustment (PTA) is **DISMISSED**.

On June 9, 2008, the Office mailed the Determination of Patent Term Adjustment under 35 U.S.C. 154(b) in the above-identified application. The Notice stated that the patent term adjustment to date is 0 days. Applicants agree with the 57 days of patent term adjustment accorded for Office delay. Applicants dispute the reduction of that period by 62 days for applicant delay between Applicants' filing of the Response to the Non-final Office action on July 25, 2007 and Applicants' filing of the Terminal Disclaimer on September 25, 2007.

Applicants' arguments have been considered, but not found persuasive. 37 CFR 1.704(c) provides, in pertinent part, that:

> Circumstances that constitute a failure of the applicant to engage in reasonable efforts to conclude processing or examination of an application also include the following circumstances, which will result in the following reduction of the period of adjustment set forth in § 1.703 to the extent that the periods are not overlapping:
>
> > (8) Submission of a supplemental reply or other paper, other than a supplemental reply or other paper expressly requested by the examiner, after a reply has been filed, in which case the period of adjustment set forth in § 1.703 shall be reduced by the number of days, if any, beginning on the day after the date the initial reply was filed and ending on the date that the supplemental reply or other such paper was filed;

It is undisputed that after the filing of a response on July 25, 2007, on September 25, 2007, applicants filed a terminal disclaimer. Applicants argue that the terminal disclaimer was expressly requested by the examiner during an interview on or about September 25, 2007.

The record does not support a conclusion that the terminal disclaimer was expressly requested by the examiner. Thus, it is concluded that the reduction of 62 days is warranted and will not be removed.

In view thereof, the determination of patent term adjustment at the time of the mailing of the notice of allowance of zero (0) days is correct.

The Office acknowledges submission of the $200.00 fee set forth in 37 CFR 1.18(e). No additional fees are required.

The application is being forwarded to the Office of Data Management for issuance of the application. The patent term adjustment indicated on the patent (as shown on the Issue Notification mailed about three weeks prior to patent issuance) will include any additional adjustment accrued both for Office delay in issuing the patent more than four months after payment of the issue fee and satisfaction of all outstanding requirements, and for the Office taking in excess of three years to issue the patent (to the extent that the three-year period does not overlap with periods already accorded).

Telephone inquiries specific to this matter should be directed to the undersigned at (571) 272-3219.

Nancy Johnson
Senior Petitions Attorney
Office of Petitions

Best Available Copy

SPE RESPONSE FOR CERTIFICATE OF CORRECTION

Paper No.: _____

DATE : 01/05/09

TO SPE OF : ART UNIT 3694

SUBJECT : Request for Certificate of Correction for Appl. No.: 11417544 Patent No.: 7533056

Please respond to this request for a certificate of correction within 7 days.

FOR IFW FILES:

Please review the requested changes/corrections as shown in the COCN document(s) in the IFW application image. No new matter should be introduced, nor should the scope or meaning of the claims be changed.

Please complete the response (see below) and forward the completed response to scanning using document code **COCX**.

FOR PAPER FILES:

Please review the requested changes/corrections as shown in the attached certificate of correction. Please complete this form (see below) and forward it with the file to:

Certificates of Correction Branch (C of C)
Randolph Square 9D40-D
Palm Location 7580
[redacted]

Lamonte Newsome
Certificates of Correction Branch
703-756-1574

Thank You For Your Assistance

The request for issuing the above-identified correction(s) is hereby:
Note your decision on the appropriate box.

XApproved	**All** changes apply.
☐ **Approved in Part**	Specify below which changes **do not** apply.
☐ **Denied**	State the reasons for denial below.

Comments: Changes are acceptable

3694

U.S. DEPARTMENT OF COMMERCE Patent and Trademark Office

SPE RESPONSE FOR CERTIFICATE OF CORRECTION

DATE : 07/06/10

TO SPE OF : ART UNIT 3694

SUBJECT : Request for Certificate of Correction for Appl. No.: 11417544 Patent No.: 7533056

Please respond to this request for a certificate of correction within 7 days.

FOR IFW FILES:

Please review the requested changes/corrections as shown in the **COCIN** document(s) in the IFW application image. No new matter should be introduced, nor should the scope or meaning of the claims be changed.

Please complete the response (see below) and forward the completed response to scanning using document code **COCX**.

FOR PAPER FILES:

Please review the requested changes/corrections as shown in the attached certificate of correction. Please complete this form (see below) and forward it with the file to:

Certificates of Correction Branch (C of C)
Randolph Square 9D40-D
Palm Location 7580

You can fax the Directors/SPE response to 571-270-9990

Lamonte Newsome

Certificates of Correction Branch

703-756-1574

Thank You For Your Assistance

The request for issuing the above-identified correction(s) is hereby:

Note your decision on the appropriate box.

XApproved	**All** changes apply.
☐ **Approved in Part**	Specify below which changes **do not** apply.
☐ **Denied**	State the reasons for denial below.

Comments: Changes are acceptable

/Ella Colbert/ Acting SPE For J. Trammell

SPE Art Unit 3694

UNITED STATES PATENT AND TRADEMARK OFFICE

UNITED STATES DEPARTMENT OF COMMERCE
United States Patent and Trademark Office
Address: COMMISSIONER FOR PATENTS
P.O. Box 1450
Alexandria, Virginia 22313-1450
www.uspto.gov

CROMPTON, SEAGER & TUFTE, LLC
1221 NICOLLET AVENUE
SUITE 800
MINNEAPOLIS, MN 55403-2420

Mail Date: 04/21/2010

Applicant	: Alan E. Shluzas	: DECISION ON REQUEST FOR
Patent Number	: 7604656	: RECALCULATION of PATENT
Issue Date	: 10/20/2009	: TERM ADJUSTMENT IN VIEW
Appliction No	: 11/417,552	: OF WYETH AND NOTICE OF INTENT TO
Filed	: 05/03/2006	: ISSUE CERTIFICATE OF CORRECTION
		:

The Request for Recalculation is **GRANTED** to the extent indicated.

The patent term adjustment has been determined to be **0** days. The USPTO will *sua sponte* issue a certificate of correction reflecting the amount of PTA days determined by the recalculation.

Prior to the issuance of the certificate of correction, the USPTO will afford patentee an opportunity to be heard and request reconsideration. Accordingly, patentee has **one month or thirty (30) days**, whichever is longer, to file a request for reconsideration of this patent term adjustment calculation. See 35 U.S.C. 154(b)(3)(B)(ii) and 37 CFR 1.322(a)(4). No extensions of time will be granted under 37 CFR 1.136.

Patentee should use document code PET.OP if electronically filing a request for reconsideration of this patent term adjustment calculation. The patentee must also include the information required by 37 CFR 1.705(b)(2) and the fee required by 37 CFR 1.18(e). If patentee does not file a timely request for reconsideration of this patent term adjustment calculation including the information required by 37 CFR 1.705(b)(2) and the fee required by 37 CFR 1.18(e), the USPTO will issue a certificate of correction reflecting the PTA determination noted above.

Patentee should be aware that in order to preserve the right to review in the United States District Court for the District of Columbia of the USPTO patent term adjustment determination, patentee must ensure that he or she also take the steps required under 35 U.S.C. 154(b)(4)(A) in a timely manner. Nothing in the request for recalculation should be construed as providing an alternative time frame for commencing a civil action under 35 U.S.C. 154(b)(4)(A).

Any questions concerning this decision should be directed to the Office of Patent Legal Administration at 571-272-7702.

UNITED STATES PATENT AND TRADEMARK OFFICE

Commissioner for Patents
United States Patent and Trademark Office
P.O. Box 1450
Alexandria, VA 22313-1450
www.uspto.gov

KNOBBE MARTENS OLSON & BEAR LLP
2040 MAIN STREET
FOURTEENTH FLOOR
IRVINE CA 92614

COPY MAILED

NOV 0 1 2006

OFFICE OF PETITIONS

In re Application of	:	
KATES	:	
Application No. 11/417,557	:	DECISION ON PETITION
Filed: May 03, 2006	:	TO MAKE SPECIAL UNDER
Attorney Docket No. KATES.012DV1	:	37 CFR 1.102(c)(1)
	:	

This is a decision on the petition under 37 CFR 1.102(c)(1), filed September 27, 2006, to make the above-identified application special based on applicant's age as set forth in M.P.E.P. § 708.02, Section IV.

The petition is **GRANTED**.

A grantable petition to make an application special under 37 CFR 1.102(c)(1) and MPEP § 708.02, Section IV: Applicant's Age, must be accompanied by evidence showing that at least one of the applicants is 65 years of age, or more, such as a birth certificate or a statement by applicant. No fee is required.

The evidence submitted with the instant petition is a declaration signed by Mr. Kates indicating that he is at least 65 years of age. Accordingly, the above-identified application has been accorded "special" status.

Telephone inquiries concerning this decision should be directed to Patricia Volpe at 571-272-6825.

All other inquiries concerning either the examination or status of the application should be directed to the Technology Center.

The application is being forwarded to the Technology Center Art Unit 3744 for action on the merits commensurate with this decision.

P. Volpe for
David Bucci
Petitions Examiner
Office of Petitions

UNITED STATES PATENT AND TRADEMARK OFFICE

Commissioner for Patents
United States Patent and Trademark Office
P.O. Box 1450
Alexandria, VA 22313-1450
www.uspto.gov

KNOBBE MARTENS OLSON & BEAR LLP
2040 MAIN STREET
FOURTEENTH FLOOR
IRVINE CA 92614

COPY MAILED

AUG 2 1 2006

OFFICE OF PETITIONS

In re Application of	:	
Kates	:	
Application No. 11/417,571	:	DECISION ON PETITION
Filed: May 3, 2006	:	TO MAKE SPECIAL UNDER
Attorney Docket No. KATES.015DV2	:	37 CFR 1.102(c)(1)
	:	

This is a decision on the petition under 37 CFR 1.102(c)(1), filed May 3, 2006 make the above-identified application special based on applicant's age as set forth in M.P.E.P. § 708.02, Section IV.

The petition is **GRANTED**.

A grantable petition to make an application special under 37 CFR 1.102(c)(1) and MPEP § 708.02, Section IV: Applicant's Age, must be accompanied by evidence showing that at least one of the applicants is 65 years of age, or more, such as a birth certificate or a statement by applicant. No fee is required.

The instant petition includes declaration statement. Accordingly, the above-identified application has been accorded "special" status.

Telephone inquiries concerning this decision should be directed to April Wise at 571-272-1642.

All other inquiries concerning either the examination or status of the application should be directed to the Technology Center.

The application is being forwarded to the Technology Center Art Unit 3644 for action on the merits commensurate with this decision.

Amelia Au
Petitions Examiner
Office of Petitions

UNITED STATES PATENT AND TRADEMARK OFFICE

UNITED STATES DEPARTMENT OF COMMERCE
United States Patent and Trademark Office
Address: COMMISSIONER FOR PATENTS
P.O. Box 1450
Alexandria, Virginia 22313-1450
www.uspto.gov

PATENT DOCKET ADMINISTRATOR
LOWENSTEIN SANDLER PC
65 LIVINGSTON AVENUE
ROSELAND, NJ 07068

Mail Date: 04/21/2010

Applicant	: William A. Telkowski	: DECISION ON REQUEST FOR
Patent Number	: 7617261	: RECALCULATION of PATENT
Issue Date	: 11/10/2009	: TERM ADJUSTMENT IN VIEW
Appliction No	: 11/417,582	: OF WYETH AND NOTICE OF INTENT TO
Filed	: 05/02/2006	: ISSUE CERTIFICATE OF CORRECTION
		:

The Request for Recalculation is **GRANTED** to the extent indicated.

The patent term adjustment has been determined to be **794** days. The USPTO will *sua sponte* issue a certificate of correction reflecting the amount of PTA days determined by the recalculation.

Prior to the issuance of the certificate of correction, the USPTO will afford patentee an opportunity to be heard and request reconsideration. Accordingly, patentee has **one month or thirty (30) days**, whichever is longer, to file a request for reconsideration of this patent term adjustment calculation. See 35 U.S.C. 154(b)(3)(B)(ii) and 37 CFR 1.322(a)(4). No extensions of time will be granted under 37 CFR 1.136.

Patentee should use document code PET.OP if electronically filing a request for reconsideration of this patent term adjustment calculation. The patentee must also include the information required by 37 CFR 1.705(b)(2) and the fee required by 37 CFR 1.18(e). If patentee does not file a timely request for reconsideration of this patent term adjustment calculation including the information required by 37 CFR 1.705(b)(2) and the fee required by 37 CFR 1.18(e), the USPTO will issue a certificate of correction reflecting the PTA determination noted above.

Patentee should be aware that in order to preserve the right to review in the United States District Court for the District of Columbia of the USPTO patent term adjustment determination, patentee must ensure that he or she also take the steps required under 35 U.S.C. 154(b)(4)(A) in a timely manner. Nothing in the request for recalculation should be construed as providing an alternative time frame for commencing a civil action under 35 U.S.C. 154(b)(4)(A).

Any questions concerning this decision should be directed to the Office of Patent Legal Administration at 571-272-7702.

UNITED STATES PATENT AND TRADEMARK OFFICE

UNITED STATES DEPARTMENT OF COMMERCE
United States Patent and Trademark Office
Address: COMMISSIONER FOR PATENTS
P.O. Box 1450
Alexandria, Virginia 22313-1450
www.uspto.gov

PEDERSEN & COMPANY, PLLC
P.O. BOX 2666
BOISE, ID 83701

Mail Date: 04/21/2010

Applicant	: Peter L. Eisenman	: DECISION ON REQUEST FOR
Patent Number	: 7597191	: RECALCULATION of PATENT
Issue Date	: 10/06/2009	: TERM ADJUSTMENT IN VIEW
Appliction No	: 11/417,583	: OF WYETH AND NOTICE OF INTENT TO
Filed	: 05/02/2006	: ISSUE CERTIFICATE OF CORRECTION
		:

The Request for Recalculation is **GRANTED** to the extent indicated.

The patent term adjustment has been determined to be **745** days. The USPTO will *sua sponte* issue a certificate of correction reflecting the amount of PTA days determined by the recalculation.

Prior to the issuance of the certificate of correction, the USPTO will afford patentee an opportunity to be heard and request reconsideration. Accordingly, patentee has **one month or thirty (30) days**, whichever is longer, to file a request for reconsideration of this patent term adjustment calculation. See 35 U.S.C. 154(b)(3)(B)(ii) and 37 CFR 1.322(a)(4). No extensions of time will be granted under 37 CFR 1.136.

Patentee should use document code PET.OP if electronically filing a request for reconsideration of this patent term adjustment calculation. The patentee must also include the information required by 37 CFR 1.705(b)(2) and the fee required by 37 CFR 1.18(e). If patentee does not file a timely request for reconsideration of this patent term adjustment calculation including the information required by 37 CFR 1.705(b)(2) and the fee required by 37 CFR 1.18(e), the USPTO will issue a certificate of correction reflecting the PTA determination noted above.

Patentee should be aware that in order to preserve the right to review in the United States District Court for the District of Columbia of the USPTO patent term adjustment determination, patentee must ensure that he or she also take the steps required under 35 U.S.C. 154(b)(4)(A) in a timely manner. Nothing in the request for recalculation should be construed as providing an alternative time frame for commencing a civil action under 35 U.S.C. 154(b)(4)(A).

Any questions concerning this decision should be directed to the Office of Patent Legal Administration at 571-272-7702.

UNITED STATES PATENT AND TRADEMARK OFFICE

Commissioner for Patents
United States Patent and Trademark Office
P.O. Box 1450
Alexandria, VA 22313-1450
www.uspto.gov

VOLPE AND KOENIG, P.C.
DEPT. ICC
UNITED PLAZA, SUITE 1600
30 SOUTH 17TH STREET
PHILADELPHIA PA 19103

COPY MAILED

NOV 29 2006

OFFICE OF PETITIONS

ON PETITION

In re Application of	:
Ana Lucia Iacono et al	:
Application No. 11/417,593	:
Filed: May 4, 2006	:
Attorney Docket No. 1-2-0423.2US	:

This is in response to the petition under 37 CFR 1.47(a), filed concurrently with the above-identified application.

The petition is granted.

The petition under 37 CFR 1.47(a) is a copy of the petition filed in prior Application Nos. 10/742,539, which was granted in a decision mailed August 11, 2005. 37 CFR 1.63(c)(3) states:

> Where the executed oath or declaration of which a copy is submitted for a continuation or divisional application was originally filed in a prior application accorded status under § 1.47, the copy of the executed oath or declaration for such prior application must be accompanied by:
>
> (I) A copy of the decision granting a petition to accord § 1.47 status to the prior application, unless all inventors have filed an oath or declaration to join in an application accorded status under § 1.47 of which the continuation or divisional application claims a benefit under 35 U.S.C. 120, 121, or 365(c)."

The petition was not accompanied by a copy of the decision granting a petition under 37 CFR 1.47(a) in the prior application. However, in order to expedite processing of this application, a copy of the decision granting 37 CFR 1.47(a) status to the parent application has been made and placed in the instant continuation application.

The above-identified application and papers are now in compliance with 37 CFR 1.47(a). This application is hereby accorded rule 1.47(a) status. As provided in 37 CFR 1.47(c), no notice of this application's filing will be forwarded to the nonsigning

inventor nor will such notice be published in the Official Gazette[1] since notice regarding the filing of the prior application was given to the nonsigning inventor.

Telephone inquiries regarding this decision should be directed to the undersigned at (571) 272-3208.

This matter is being referred to Technology Center AU 2616.

Karen Creasy

Karen Creasy
Petitions Examiner
Office of Petitions

[1] Note Federal Register, Vol. 65, No. 175; Friday, September 8, 2000.

UNITED STATES PATENT AND TRADEMARK OFFICE

Commissioner for Patents
United States Patent and Trademark Office
P.O. Box 1450
Alexandria, VA 22313-1450
www.uspto.gov

JJGJR: 08-05

Paper No: __

VOLPE AND KOENIG, P.C.
DEPT. ICC
UNITED PLAZA, SUITE 1600
30 SOUTH 17TH STREET
PHILADELPHIA PA 19103

COPY MAILED
AUG 1 1 2005
OFFICE OF PETITIONS

In re Application of	:	
Iacono, et al.	:	
Application No. 10/742,539	:	ON PETITION
Filed: 19 December, 2003	:	
Attorney Docket No. I-2-0423.1US	:	

This is a decision on the petition under ¶(a) of 37 C.F.R. §1.47, filed on 22 September, 2004

The petition is **GRANTED**.

BACKGROUND

The record indicates:

- the application was filed on 19 December, 2003, without, *inter alia*, a fully executed oath or declaration; and
- on 1 April, 2004, the Office mailed a Notice to File Missing Parts with a reply due absent extension of time on or before 1 June, 2004;
- on 4 June, 2004 (over a 1 June, 2004, certificate of mail), Petitioner filed, *inter alia*, an oath/declaration signed by named inventors Iacono, Doshi, Movva, Stern-Berkowitz, Terry and Zhang, but without the signature of Gary Schnee (Mr. Schnee), a petition under 37

C.F.R. §1.47, and narrative by Petitioner John C. Donch, Jr. (Reg. No. 43,593), however, it is clear that: the address used to forward the application to Mr. Schnee was not a valid current address for Mr. Schnee, the application was not delivered, and there was no showing that Petitioner had made a good faith effort to determine a current valid address (such as that available through a web search and locating a Gary Schnee in Connecticut) for Mr. Schnee, and so the petition was dismissed on 22 July, 2004;

- apparently Petitioner filed a renewed petition on 28 September (over a 22 September certificate of mailing), 2004, however the papers were not scanned into the image file wrapper (IFW), and (following the filing on 10 February, 2005, of at least one Status Inquiry) Petitioner resubmitted the materials via FAX on 26 July, 2005, and supplemented on 9 August, 2005, and it appears further that Petitioner has sought to overcome the deficiencies previously noted.

Lastly, Petitioner has submitted a declaration in compliance with 37 C.F.R. §1.63 and §1.64 and Petitioner has shown that such action is necessary to prevent irreparable damage.

This application and papers have been reviewed and found in compliance with 37 C.F.R. §1.47(b).

This application hereby is **ACCORDED status under 37 C.F.R. §1.47(b)**.

As provided under 37 C.F.R. §1.47(b), the Office will forward notice of this application's filing to the non-signing inventor at the address given in the petition.

Notice of the filing of this application also will be published in the Official Gazette.

This file is released to OIPE for processing as necessary to reflect the instant decision before being released for examination in due course.

Telephone inquiries concerning this decision may be directed to the undersigned at (571) 272-3214.

John J. Gillon, Jr.
Senior Attorney
Office of Petitions

UNITED STATES PATENT AND TRADEMARK OFFICE

Commissioner for Patents
United States Patent and Trademark Office
P.O. Box 1450
Alexandria, VA 22313-1450
www.uspto.gov

COPY MAILED

MAY 2 7 2008

OFFICE OF PETITIONS

ECKERT SEAMANS CHERIN & MELLOTT
600 GRANT STREET
44TH FLOOR
PITTSBURGH PA 15219

In re Application of

ATALAR, Ergin et al.
Application No. 11/417,594
Filed: May 04, 2006
Attorney Docket No. **295213-00001-1**

DECISION ON PETITION
TO WITHDRAW
FROM RECORD

This is a decision on the Request to Withdraw as attorney or agent of record under 37 C.F.R. § 1.36(b), filed February 19, 2008.

The request is **NOT APPROVED**.

A grantable request to withdraw as attorney/agent of record must be signed by every attorney/agent seeking to withdraw or contain a clear indication that one attorney is signing on behalf of another/others. A request to withdraw will not be approved unless at least 30 (thirty) days would remain between the date of approval and the later of the expiration date of a time to file a response or the expiration date of the maximum time period which can be extended under 37 C.F.R. § 1.136(a).

The Office cannot approve the request at this time since the reasons provided do not meet any of the conditions under the mandatory or permissive categories enumerated in 37 CFR 10.40. Section 10.40 of Title 37 of the Code of Federal Regulation states, "[a] practitioner shall not withdraw from employment in a proceeding before the Office without permission from the Office[.]" More specifically, 37 CFR 10.40 states, "[i]f paragraph (b) of this section is not applicable, a practitioner may not request permission to withdraw in matter pending before the Office unless such request or such withdrawal is" for one the permissive reasons listed in 37 CFR 10.40(c). The reason set forth in the request, ownership transfer, does not meet any of the conditions set forth in 37 CFR 10.40.

All future communications from the Office will continue to be directed to the above-listed address until otherwise notified by applicant.

Telephone inquiries concerning this decision should be directed to Tredelle Jackson at 571-272- 2783.

Tredelle D. Jackson
Petitions Examiner
Office of Petitions

UNITED STATES PATENT AND TRADEMARK OFFICE

Commissioner for Patents
United States Patent and Trademark Office
P.O. Box 1450
Alexandria, VA 22313-1450
www.uspto.gov

Marshall, Gerstein & Borun, LLP
233 South Wacker Drive
6300 Sears Tower
Chicago, IL 60606-6357

MAILED

FEB 27 2009

OFFICE OF PETITIONS

In re Application of	:	
Jedediah Feller	:	
Application No. 11/417,603	:	DECISION ON PETITION
Filed: May 3, 2006	:	TO WITHDRAW
Attorney Docket No. 30840/40158C	:	FROM RECORD
	:	

This is a decision on the Request to Withdraw as attorney or agent of record under 37 C.F.R. § 1.36(b), filed January 30, 2009.

The request is **APPROVED**.

A grantable request to withdraw as attorney/agent of record must be signed by every attorney/agent seeking to withdraw or contain a clear indication that one attorney is signing on behalf of another/others. A request to withdraw will not be approved unless at least 30 (thirty) days would remain between the date of approval and the later of the expiration date of a time to file a response or the expiration date of the maximum time period which can be extended under 37 C.F.R. § 1.136(a).

The request was signed by Thomas K. Stine on behalf of all attorneys/agents associated with customer number 04743. All attorneys/agents associated with customer number 04743 have been withdrawn.

Applicant is reminded that there is no attorney of record at this time.

The correspondence address has been changed and is copied below.

Telephone inquiries concerning this decision should be directed to Kimberly Inabinet at 571-272-4618.

Kimberly Inabinet
Petitions Examiner
Office of Petitions

cc: Jedediah Feller
2871 North Tenaya Way
Las Vegas, NV 89128-0452

UNITED STATES PATENT AND TRADEMARK OFFICE

UNITED STATES DEPARTMENT OF COMMERCE
United States Patent and Trademark Office
Address: COMMISSIONER FOR PATENTS
P.O. Box 1450
Alexandria, Virginia 22313-1450
www.uspto.gov

APPLICATION NUMBER	FILING OR 371(C) DATE	FIRST NAMED APPLICANT	ATTY. DOCKET NO./TITLE
11/417,603	05/03/2006	Jedediah M. Feller	30840/40158C

CONFIRMATION NO. 8861

POWER OF ATTORNEY NOTICE

4743
MARSHALL, GERSTEIN & BORUN LLP
233 SOUTH WACKER DRIVE
6300 SEARS TOWER
CHICAGO, IL 60606-6357

OC000000034782281

Date Mailed: 02/27/2009

NOTICE REGARDING CHANGE OF POWER OF ATTORNEY

This is in response to the Power of Attorney filed 01/30/2009.

- The withdrawal as attorney in this application has been accepted. Future correspondence will be mailed to the new address of record. 37 CFR 1.33.

/kainabinet/

Office of Data Management, Application Assistance Unit (571) 272-4000, or (571) 272-4200, or 1-888-786-0101

UNITED STATES PATENT AND TRADEMARK OFFICE

Commissioner for Patents
United States Patent and Trademark Office
P.O. Box 1450
Alexandria, VA 22313-1450
www.uspto.gov

KNOBBE MARTENS OLSON & BEAR LLP
2040 MAIN STREET
FOURTEENTH FLOOR
IRVINE CA 92614

COPY MAILED

MAR 0 8 2007

OFFICE OF PETITIONS

In re Application of	:	
Lawrence Kates	:	
Application No. 11/417,609	:	DECISION ON PETITION
Filed: May 3, 2006	:	TO MAKE SPECIAL UNDER
Attorney Docket No. KATES.021DV1	:	37 CFR 1.102(c)(1)
	:	

This is a decision on the petition under 37 CFR 1.102(c)(1), filed August 31, 2006, to make the above-identified application special based on applicant's age as set forth in M.P.E.P. § 708.02, Section IV.

The petition is **GRANTED**.

A grantable petition to make an application special under 37 CFR 1.102(c)(1) and MPEP § 708.02, Section IV: Applicant's Age must be accompanied by evidence showing that at least one of the applicants is 65 years of age, or more, such as a birth certificate or a statement by applicant. No fee is required

The instant petition includes the declaration of inventor Lawrence Kates, attesting to his age. Accordingly, the above-identified application has been accorded "special" status.

Telephone inquiries concerning this decision should be directed to Tredelle Jackson at 571-272-2783.

All other inquiries concerning either the examination or status of the application should be directed to the Technology Center.

The application is being forwarded to the Technology Center Art Unit 3744 for action on the merits commensurate with this decision.

Monica A. Graves
Petitions Examiner
Office of Petitions

UNITED STATES PATENT AND TRADEMARK OFFICE

UNITED STATES DEPARTMENT OF COMMERCE
United States Patent and Trademark Office
Address: COMMISSIONER FOR PATENTS
P.O. Box 1450
Alexandria, Virginia 22313-1450
www.uspto.gov

INTEL/BSTZ
BLAKELY SOKOLOFF TAYLOR & ZAFMAN LLP
1279 OAKMEAD PARKWAY
SUNNYVALE, CA 94085-4040

Mail Date: 04/21/2010

Applicant	: Michael D. Goodner	: DECISION ON REQUEST FOR
Patent Number	: 7572732	: RECALCULATION of PATENT
Issue Date	: 08/11/2009	: TERM ADJUSTMENT IN VIEW
Appliction No	: 11/417,615	: OF WYETH AND NOTICE OF INTENT TO
Filed	: 05/03/2006	: ISSUE CERTIFICATE OF CORRECTION
		:

The Request for Recalculation is **GRANTED** to the extent indicated.

The patent term adjustment has been determined to be **470** days. The USPTO will *sua sponte* issue a certificate of correction reflecting the amount of PTA days determined by the recalculation.

Prior to the issuance of the certificate of correction, the USPTO will afford patentee an opportunity to be heard and request reconsideration. Accordingly, patentee has **one month or thirty (30) days**, whichever is longer, to file a request for reconsideration of this patent term adjustment calculation. See 35 U.S.C. 154(b)(3)(B)(ii) and 37 CFR 1.322(a)(4). No extensions of time will be granted under 37 CFR 1.136.

Patentee should use document code PET.OP if electronically filing a request for reconsideration of this patent term adjustment calculation. The patentee must also include the information required by 37 CFR 1.705(b)(2) and the fee required by 37 CFR 1.18(e). If patentee does not file a timely request for reconsideration of this patent term adjustment calculation including the information required by 37 CFR 1.705(b)(2) and the fee required by 37 CFR 1.18(e), the USPTO will issue a certificate of correction reflecting the PTA determination noted above.

Patentee should be aware that in order to preserve the right to review in the United States District Court for the District of Columbia of the USPTO patent term adjustment determination, patentee must ensure that he or she also take the steps required under 35 U.S.C. 154(b)(4)(A) in a timely manner. Nothing in the request for recalculation should be construed as providing an alternative time frame for commencing a civil action under 35 U.S.C. 154(b)(4)(A).

Any questions concerning this decision should be directed to the Office of Patent Legal Administration at 571-272-7702.

UNITED STATES PATENT AND TRADEMARK OFFICE

Commissioner for Patents
United States Patent and Trademark Office
P.O. Box 1450
Alexandria, VA 22313-1450
www.uspto.gov

WIGGIN AND DANA LLP
ATTENTION: PATENT DOCKETING
ONE CENTURY TOWER, P.O. BOX 1832
NEW HAVEN CT 06508-1832

MAILED

APR 23 2009

OFFICE OF PETITIONS

In re Application of	:	
Felix Dimanshteyn	:	
Application No. 11/417,629	:	ON PETITION
Filed: May 4, 2006	:	
Attorney Docket No. 102853-100	:	

This is a decision on the petition under 37 CFR 1.102(c)(1), filed March 2, 2009, to make the above-identified application special based on applicant's age as set forth in M.P.E.P. § 708.02, Section IV.

The petition is **GRANTED**.

A grantable petition to make an application special under 37 CFR 1.102(c)(1) and MPEP § 708.02, Section IV: Applicant's Age must be accompanied by evidence showing that at least one of the applicants is 65 years of age, or more, such as a birth certificate or a statement by applicant. No fee is required.

The instant petition includes a statement (PTO/SB/130 form) by applicant's attorney that he is 65 years of age. Accordingly, the above-identified application has been accorded "special" status.

Telephone inquiries concerning this decision should be directed to the undersigned at 571-272-7751. All other inquiries concerning either the examination or status of the application should be directed to the Technology Center.

This matter is being referred to the Technology Center Art Unit 1796 for action on the merits commensurate with this decision.

Joan Olszewski

Joan Olszewski
Petitions Examiner
Office of Petitions

UNITED STATES PATENT AND TRADEMARK OFFICE

Commissioner for Patents
United States Patent and Trademark Office
P.O. Box 1450
Alexandria, VA 22313-1450
www.uspto.gov

HOWARD IP LAW GROUP
P.O. BOX 226
FORT WASHINGTON, PA 19034

COPY MAILED
JUL 16 2008

In re Application of	:	
Frank J. Disanto, et al.	:	
Application No. 11/417,631	:	DECISION ON PETITION
Filed: May 4, 2006	:	TO WITHDRAW
Attorney Docket No. COPY-74-CIP-4	:	FROM RECORD
	:	

This is a decision on the Request to Withdraw as attorney or agent of record under 37 C.F.R. § 1.36(b), filed January 10, 2008.

The request is **NOT APPROVED**.

A grantable request to withdraw as attorney/agent of record must be signed by every attorney/agent seeking to withdraw or contain a clear indication that one attorney is signing on behalf of another/others. A request to withdraw will not be approved unless at least 30 (thirty) days would remain between the date of approval and the later of the expiration date of a time to file a response or the expiration date of the maximum time period which can be extended under 37 C.F.R. § 1.136(a).

The Office cannot approve the request at this time since the reasons provided do not meet any of the conditions under the mandatory or permissive categories enumerated in 37 CFR 10.40. Section 10.40 of Title 37 of the Code of Federal Regulation states, "[a] practitioner shall not withdraw from employment in a proceeding before the Office without permission from the Office[.]" More specifically, 37 CFR 10.40 states, "[i]f paragraph (b) of this section is not applicable, a practitioner may not request permission to withdraw in matter pending before the Office unless such request or such withdrawal is" for one the permissive reasons listed in 37 CFR 10.40(c). The reasons set forth in the request, "files were reassigned to the below mentioned firm in November and December and transferred to the address as mentioned below", does not meet any of the conditions set forth in 37 CFR 10.40.

Furthermore the petition cannot be approved because the petitions were appointed by customer number. Petitioners must withdraw by the same customer number that they were appointed by.

All future communications from the Office will continue to be directed to the above-listed address until otherwise notified by applicant.

Telephone inquiries concerning this decision should be directed to undersigned at 571-272-1642.

April M. Wise
Petitions Examiner
Office of Petitions

cc: THE PLEVY LAW FIRM
10 RUTGERS PLACE
TRENTON, NJ 08618

UNITED STATES PATENT AND TRADEMARK OFFICE
CERTIFICATE OF CORRECTION

PATENT NO.: 7,297,138

DATED: November 20, 2007

INVENTOR(S): Thomas F. Fangrow

It is certified that error appears in the above-identified patent and that said Letters Patent is hereby corrected as shown below:

At page 3, at column 1, line 16, please delete "03/026726" and insert - - 03/026728 - -, therefor.
At page 3, at column 2, line 1, please delete "htt://" and insert - - http://- -, therefor.
At column 5, line 46, please delete "d" and insert - - 'd' - -, therefor.
At column 7, line 42, after "120" delete ".".
At column 10, line 16, please delete "'j'" and insert - - 'e' - -, therefor.
At column 14, line 51 (approx.), in Claim 8, after "base" insert - -, - -.

/ANDREW M GILBERT/
Examiner.Art Unit 3767

/KEVIN C SIRMONS/
Supervisory Patent Examiner.Art Unit 3767

UNITED STATES PATENT AND TRADEMARK OFFICE

UNITED STATES DEPARTMENT OF COMMERCE
United States Patent and Trademark Office
Address: COMMISSIONER FOR PATENTS
P.O. Box 1450
Alexandria, Virginia 22313-1450
www.uspto.gov

KNOBBE MARTENS OLSON & BEAR LLP
2040 MAIN STREET
FOURTEENTH FLOOR
IRVINE, CA 92614

Mail Date: 04/20/2010

Applicant	: Steven F. Bolling	: DECISION ON REQUEST FOR
Patent Number	: 7588531	: RECALCULATION of PATENT
Issue Date	: 09/15/2009	: TERM ADJUSTMENT IN VIEW
Appliction No	: 11/417,677	: OF WYETH AND NOTICE OF INTENT TO
Filed	: 05/03/2006	: ISSUE CERTIFICATE OF CORRECTION
		:

The Request for Recalculation is **GRANTED** to the extent indicated.

The patent term adjustment has been determined to be **316** days. The USPTO will *sua sponte* issue a certificate of correction reflecting the amount of PTA days determined by the recalculation.

Prior to the issuance of the certificate of correction, the USPTO will afford patentee an opportunity to be heard and request reconsideration. Accordingly, patentee has **one month or thirty (30) days**, whichever is longer, to file a request for reconsideration of this patent term adjustment calculation. See 35 U.S.C. 154(b)(3)(B)(ii) and 37 CFR 1.322(a)(4). No extensions of time will be granted under 37 CFR 1.136.

Patentee should use document code PET.OP if electronically filing a request for reconsideration of this patent term adjustment calculation. The patentee must also include the information required by 37 CFR 1.705(b)(2) and the fee required by 37 CFR 1.18(e). If patentee does not file a timely request for reconsideration of this patent term adjustment calculation including the information required by 37 CFR 1.705(b)(2) and the fee required by 37 CFR 1.18(e), the USPTO will issue a certificate of correction reflecting the PTA determination noted above.

Patentee should be aware that in order to preserve the right to review in the United States District Court for the District of Columbia of the USPTO patent term adjustment determination, patentee must ensure that he or she also take the steps required under 35 U.S.C. 154(b)(4)(A) in a timely manner. Nothing in the request for recalculation should be construed as providing an alternative time frame for commencing a civil action under 35 U.S.C. 154(b)(4)(A).

Any questions concerning this decision should be directed to the Office of Patent Legal Administration at 571-272-7702.

UNITED STATES PATENT AND TRADEMARK OFFICE

UNITED STATES DEPARTMENT OF COMMERCE
United States Patent and Trademark Office
Address: COMMISSIONER FOR PATENTS
P.O. Box 1450
Alexandria, Virginia 22313-1450
www.uspto.gov

CHERNOFF, VILHAUER, MCCLUNG & STENZEL, LLP
601 SW Second Avenue
Suite 1600
PORTLAND, OR 97204-3157

Mail Date: 04/21/2010

Applicant	: Klaus Hagelganz	: DECISION ON REQUEST FOR
Patent Number	: 7585171	: RECALCULATION of PATENT
Issue Date	: 09/08/2009	: TERM ADJUSTMENT IN VIEW
Appliction No	: 11/417,685	: OF WYETH AND NOTICE OF INTENT TO
Filed	: 05/04/2006	: ISSUE CERTIFICATE OF CORRECTION
		:

The Request for Recalculation is **GRANTED** to the extent indicated.

The patent term adjustment has been determined to be **203** days. The USPTO will *sua sponte* issue a certificate of correction reflecting the amount of PTA days determined by the recalculation.

Prior to the issuance of the certificate of correction, the USPTO will afford patentee an opportunity to be heard and request reconsideration. Accordingly, patentee has **one month or thirty (30) days**, whichever is longer, to file a request for reconsideration of this patent term adjustment calculation. See 35 U.S.C. 154(b)(3)(B)(ii) and 37 CFR 1.322(a)(4). No extensions of time will be granted under 37 CFR 1.136.

Patentee should use document code PET.OP if electronically filing a request for reconsideration of this patent term adjustment calculation. The patentee must also include the information required by 37 CFR 1.705(b)(2) and the fee required by 37 CFR 1.18(e). If patentee does not file a timely request for reconsideration of this patent term adjustment calculation including the information required by 37 CFR 1.705(b)(2) and the fee required by 37 CFR 1.18(e), the USPTO will issue a certificate of correction reflecting the PTA determination noted above.

Patentee should be aware that in order to preserve the right to review in the United States District Court for the District of Columbia of the USPTO patent term adjustment determination, patentee must ensure that he or she also take the steps required under 35 U.S.C. 154(b)(4)(A) in a timely manner. Nothing in the request for recalculation should be construed as providing an alternative time frame for commencing a civil action under 35 U.S.C. 154(b)(4)(A).

Any questions concerning this decision should be directed to the Office of Patent Legal Administration at 571-272-7702.

UNITED STATES PATENT AND TRADEMARK OFFICE

UNITED STATES DEPARTMENT OF COMMERCE
United States Patent and Trademark Office
Address: COMMISSIONER FOR PATENTS
P.O. Box 1450
Alexandria, Virginia 22313-1450
www.uspto.gov

FLIESLER MEYER LLP
650 CALIFORNIA STREET
14TH FLOOR
SAN FRANCISCO, CA 94108

Mail Date: 04/20/2010

Applicant	: Yi-Qun Li	: DECISION ON REQUEST FOR
Patent Number	: 7601276	: RECALCULATION of PATENT
Issue Date	: 10/13/2009	: TERM ADJUSTMENT IN VIEW
Appliction No	: 11/417,690	: OF WYETH AND NOTICE OF INTENT TO
Filed	: 05/03/2006	: ISSUE CERTIFICATE OF CORRECTION
		:

The Request for Recalculation is **GRANTED** to the extent indicated.

The patent term adjustment has been determined to be **338** days. The USPTO will *sua sponte* issue a certificate of correction reflecting the amount of PTA days determined by the recalculation.

Prior to the issuance of the certificate of correction, the USPTO will afford patentee an opportunity to be heard and request reconsideration. Accordingly, patentee has **one month or thirty (30) days**, whichever is longer, to file a request for reconsideration of this patent term adjustment calculation. See 35 U.S.C. 154(b)(3)(B)(ii) and 37 CFR 1.322(a)(4). No extensions of time will be granted under 37 CFR 1.136.

Patentee should use document code PET.OP if electronically filing a request for reconsideration of this patent term adjustment calculation. The patentee must also include the information required by 37 CFR 1.705(b)(2) and the fee required by 37 CFR 1.18(e). If patentee does not file a timely request for reconsideration of this patent term adjustment calculation including the information required by 37 CFR 1.705(b)(2) and the fee required by 37 CFR 1.18(e), the USPTO will issue a certificate of correction reflecting the PTA determination noted above.

Patentee should be aware that in order to preserve the right to review in the United States District Court for the District of Columbia of the USPTO patent term adjustment determination, patentee must ensure that he or she also take the steps required under 35 U.S.C. 154(b)(4)(A) in a timely manner. Nothing in the request for recalculation should be construed as providing an alternative time frame for commencing a civil action under 35 U.S.C. 154(b)(4)(A).

Any questions concerning this decision should be directed to the Office of Patent Legal Administration at 571-272-7702.

UNITED STATES PATENT AND TRADEMARK OFFICE

Commissioner for Patents
United States Patent and Trademark Office
P.O. Box 1450
Alexandria, VA 22313-1450
www.uspto.gov

KNOBBE, MARTENS, OLSON & BEAR LLP
2040 MAIN STREET
FOURTEENTH FLOOR
IRVINE, CA 92614

COPY MAILED

OCT 20 2006

OFFICE OF PETITIONS

In re Application of	:	
Kates	:	
Application No. 11/417,701	:	DECISION ON PETITION
Filed: May 3, 2006	:	TO MAKE SPECIAL UNDER
Attorney Docket No. KATES.020DV1	:	37 CFR 1.102(c)(1)
	:	

This is a decision on the petition under 37 CFR 1.102(c)(1), filed August 31, 2006, to make the above-identified application special based on applicant's age as set forth in M.P.E.P. § 708.02, Section IV.

The petition is **GRANTED**.

A grantable petition to make an application special under 37 CFR 1.102(c)(1) and MPEP § 708.02, Section IV: Applicant's Age, must be accompanied by evidence showing that at least one of the applicants is 65 years of age, or more, such as a birth certificate or a statement by applicant. No fee is required.

The instant petition includes declaration statement signed by the applicant. Accordingly, the above-identified application has been accorded "special" status.

Telephone inquiries concerning this decision should be directed to April Wise at 571-272-1642.

All other inquiries concerning either the examination or status of the application should be directed to the Technology Center.

The application is being forwarded to the Technology Center Art Unit 3744 for action on the merits commensurate with this decision.

April M. Wise
Petitions Examiner
Office of Petitions

OK TO ENTER: /AG/

Knobbe Martens Olson & Bear LLP

Intellectual Property Law

2040 Main Street
Fourteenth Floor
Irvine, CA 92614
Tel 949-760-0404
Fax 949-760-9502
www.kmob.com

Paul N. Conover
pconover@kmob.com

April 1, 2008

CERTIFICATE OF EFS WEB TRANSMISSION

I hereby certify that this correspondence, and any other attachment noted on the automated Acknowledgement Receipt, is being transmitted from within the Pacific Time zone to the Commissioner for Patents via the EFS Web server on:

4/1/08
(Date)

Paul Conover
Paul N. Conover, Reg. No. 44,087

Commissioner for Patents
P.O. Box 1450
Alexandria, VA 22313-1450

Re: Title: INFUSION SET
Letters Patent No. 7,300,419
Issued: November 27, 2007
Our Reference: ICUMM.183C2

Dear Sir:

Enclosed for filing is a Certificate of Correction in connection with the above-identified patent. As the errors cited in the Certificate of Correction were incurred through the fault of the Patent Office and Applicant. Fees will be paid via EFS Web. Please charge any additional fees to our Deposit Account No. 11-1410.

Respectfully submitted,

Knobbe, Martens, Olson & Bear, LLP

Paul Conover

Paul N. Conover
Registration No. 44,087
Customer No. 20995

Enclosures

5046127
032008

OK TO ENTER: /AG/

UNITED STATES PATENT AND TRADEMARK OFFICE
CERTIFICATE OF CORRECTION

PATENT NO. : 7,300,419
APPLICATION NO. : 11/417,707
ISSUE DATE : November 27, 2007
INVENTOR(S) : Thomas F. Fangrow

It is certified that error appears in the above-identified patent and that said Letters Patent is hereby corrected as shown below:

At column 1, line 56, please delete "Funderbunk et al." and insert - - Funderburk et al. - -, therefor.

At column 1, line 66, please delete "Funderbunk et al." and insert - - Funderburk et al. - -, therefor.

At column 2, line 63, please delete "Morgensen et al." and insert - - Mogensen et al. - -, therefor.

At column 4, line 44, please delete "1100" and insert - - 100 - -, therefor.

At column 7, line 32, please delete "11 130 4" and insert - - 130 - -, therefor.

5045904
032008

MAILING ADDRESS OF SENDER:

Paul N. Conover
KNOBBE, MARTENS, OLSON & BEAR, LLP
2040 Main Street, 14th Floor
Irvine, California 92614

DOCKET NO. ICUMM.183C2

UNITED STATES PATENT AND TRADEMARK OFFICE

Commissioner for Patents
United States Patent and Trademark Office
P.O. Box 1450
Alexandria, VA 22313-1450
www.uspto.gov

PERKINS COIE LLP
PATENT-SEA
P.O. BOX 1247
SEATTLE WA 98111-1247

MAILED

JUN 22 2010

OFFICE OF PETITIONS

In re Application of
Russ Lemley, et al.
Application No. 11/417,724
Filed: May 4, 2006

ON PETITION

This is a decision on the petition under the unintentional provisions of 37 CFR 1.137(b), filed May 7, 2010, to revive the above-identified application.

The petition is **DISMISSED AS MOOT**.

There was a timely response to the Non-final Office action mailed April 16, 2009 received in the application on March 11, 2010 along with a three (3) month extension of time. The above-identified application in not abandoned.

The application file does not indicate a change of address has been filed in this case, although the address given on the petition differs from the address of record. A change of address should be filed in this case in accordance with MPEP 601.03. A courtesy copy of this decision is being mailed to the address noted on the petition. However, until otherwise instructed, all future correspondence regarding this application will be mailed solely to the address of record.

The $1,620 petition fee will be refunded in due course by treasury check.

Telephone inquires should be directed to Terri Johnson at (571) 272-2991.

The application in is being forwarded to Technology Center AU 3673 for further processing.

Terri Johnson
Petitions Examiner
Office of Petitions

cc: **FRANK J. MCGUE**
10801 N. 32ND STREET, SUITE 5
PHOENIX, AZ 85028

UNITED STATES DEPARTMENT OF COMMERCE
COMMISSIONER FOR PATENTS
P. O. BOX 1450
ALEXANDRIA, VA 22313-1450

Date : 3/4/2010
Patent No. : 7, 654,401 B2
Serial No. : 11/417,744
Inventor(s) : Obergoenner
Issue Date : February 2, 2010
Title : **WOOD JOINT FOR A BARRELHEAD**
Doc./File No. : **24030-001**

Re: Reconsideration for Certificate of Correction

Consideration has been given your request for a certificate of correction, for the above-identified patent under the provisions of Rule 1.322.

Respecting, the alleged error in your request, inspection of the file of the application for the patent reveals that claim 4, lines 1 & 2, in the patent, is/are printed in accordance with the record in the Patent and Trademark Office, as passed to issued by the examiner. There being no fault on the part of the Patent and Trademark Office, it has no authority to issue a certificate of correction under the provision of 1.322. Therefore no correction is in order here.

In view of the foregoing, your request is hereby denied.

Further consideration will be given concerning this matter upon receipt of a request for **Reconsideration** (reconsideration should be accompanied by supporting document(s) such as, amendment, postcard receipt, 1449/892, etc.) and should be filed and directed to Decisions & Certificates of Correction Branch.

Ernest C. White, *LIE* (703) 756-1590
Mary F. Diggs, *Supervisor* (703) 756-1580
Decisions & Certificates of Correction Branch

David H. Chervitz
458 Whitestone Farm Drive
Chesterfield MO 63017

ecw

UNITED STATES PATENT AND TRADEMARK OFFICE

UNITED STATES DEPARTMENT OF COMMERCE
United States Patent and Trademark Office
Address: COMMISSIONER FOR PATENTS
P.O. Box 1450
Alexandria, Virginia 22313-1450
www.uspto.gov

David H. Chervitz
458 Whitestone Farm Drive
Chesterfield, MO 63017

Mail Date: 04/21/2010

Applicant	: Donald Obergoenner	: DECISION ON REQUEST FOR
Patent Number	: 7654401	: RECALCULATION of PATENT
Issue Date	: 02/02/2010	: TERM ADJUSTMENT IN VIEW
Appliction No	: 11/417,744	: OF WYETH AND NOTICE OF INTENT TO
Filed	: 05/04/2006	: ISSUE CERTIFICATE OF CORRECTION
		:

The Request for Recalculation is **GRANTED** to the extent indicated.

The patent term adjustment has been determined to be **334** days. The USPTO will *sua sponte* issue a certificate of correction reflecting the amount of PTA days determined by the recalculation.

Prior to the issuance of the certificate of correction, the USPTO will afford patentee an opportunity to be heard and request reconsideration. Accordingly, patentee has **one month or thirty (30) days**, whichever is longer, to file a request for reconsideration of this patent term adjustment calculation. See 35 U.S.C. 154(b)(3)(B)(ii) and 37 CFR 1.322(a)(4). No extensions of time will be granted under 37 CFR 1.136.

Patentee should use document code PET.OP if electronically filing a request for reconsideration of this patent term adjustment calculation. The patentee must also include the information required by 37 CFR 1.705(b)(2) and the fee required by 37 CFR 1.18(e). If patentee does not file a timely request for reconsideration of this patent term adjustment calculation including the information required by 37 CFR 1.705(b)(2) and the fee required by 37 CFR 1.18(e), the USPTO will issue a certificate of correction reflecting the PTA determination noted above.

Patentee should be aware that in order to preserve the right to review in the United States District Court for the District of Columbia of the USPTO patent term adjustment determination, patentee must ensure that he or she also take the steps required under 35 U.S.C. 154(b)(4)(A) in a timely manner. Nothing in the request for recalculation should be construed as providing an alternative time frame for commencing a civil action under 35 U.S.C. 154(b)(4)(A).

Any questions concerning this decision should be directed to the Office of Patent Legal Administration at 571-272-7702.

UNITED STATES PATENT AND TRADEMARK OFFICE

UNITED STATES DEPARTMENT OF COMMERCE
United States Patent and Trademark Office
Address: COMMISSIONER FOR PATENTS
P.O. Box 1450
Alexandria, Virginia 22313-1450
www.uspto.gov

Weaver Austin Villeneuve & Sampson LLP
P.O. BOX 70250
OAKLAND, CA 94612-0250

Mail Date: 05/19/2010

Applicant	: John T. Chapman	: DECISION ON REQUEST FOR
Patent Number	: 7620836	: RECALCULATION of PATENT
Issue Date	: 11/17/2009	: TERM ADJUSTMENT IN VIEW
Application No	: 11/417,759	: OF WYETH AND NOTICE OF INTENT TO
Filed	: 05/03/2006	: ISSUE CERTIFICATE OF CORRECTION
		:

The Request for Recalculation is **GRANTED** to the extent indicated.

The patent term adjustment has been determined to be **461** days. The USPTO will *sua sponte* issue a certificate of correction reflecting the amount of PTA days determined by the recalculation.

Prior to the issuance of the certificate of correction, the USPTO will afford patentee an opportunity to be heard and request reconsideration. Accordingly, patentee has **one month or thirty (30) days**, whichever is longer, to file a request for reconsideration of this patent term adjustment calculation. See 35 U.S.C. 154(b)(3)(B)(ii) and 37 CFR 1.322(a)(4). No extensions of time will be granted under 37 CFR 1.136.

Patentee should use document code PET.OP if electronically filing a request for reconsideration of this patent term adjustment calculation. The patentee must also include the information required by 37 CFR 1.705(b)(2) and the fee required by 37 CFR 1.18(e). If patentee does not file a timely request for reconsideration of this patent term adjustment calculation including the information required by 37 CFR 1.705(b)(2) and the fee required by 37 CFR 1.18(e), the USPTO will issue a certificate of correction reflecting the PTA determination noted above.

Patentee should be aware that in order to preserve the right to review in the United States District Court for the District of Columbia of the USPTO patent term adjustment determination, patentee must ensure that he or she also take the steps required under 35 U.S.C. 154(b)(4)(A) in a timely manner. Nothing in the request for recalculation should be construed as providing an alternative time frame for commencing a civil action under 35 U.S.C. 154(b)(4)(A).

Any questions concerning this decision should be directed to the Office of Patent Legal Administration at 571-272-7702.

UNITED STATES PATENT AND TRADEMARK OFFICE

Commissioner for Patents
United States Patent and Trademark Office
P.O. Box 1450
Alexandria, VA 22313-1450
www.uspto.gov

MAILED

FEB 2 8 2007

Technology Center 2100

POTOMAC PATENT GROUP, PLLC
P. O. BOX 270
FREDERICKSBURG, VA 22404

In re Application of: Frank J. Wroblewski.
Application No. 11/417,764
Filed: May 4, 2006
For: METHODS AND SYSTEMS FOR SCROLLING AND POINTING IN USER INTERFACES

TO MAKE SPECIAL
(ACCELERATED EXAMINATION)
UNDER M.P.E.P. §708.02 (VIII)
DECISION ON PETITION

This is a decision on the petition to make special under 37 C.F.R. §102(d) and M.P.E.P. §708.02(VIII): Accelerated Examination, filed on August 24, 2006.

The Petition is **DISMISSED**.

M.P.E.P. §708.02, Section VIII which sets out the prerequisites for a grantable petition for Accelerated Examination under 37 C.F.R. §1.102(d) states in relevant part:

A new application (one which has not received any examination by the examiner) may be granted special status provided that applicant (and this term includes applicant's attorney or agent) complies with each of the following items:

(a) Submits a petition to make special accompanied by the fee set forth in 37 CFR 1.17(h);

(b) Presents all claims directed to a single invention, or if the Office determines that all the claims presented are not obviously directed to a single invention, will make an election without traverse as a prerequisite to the grant of special status;

(c) Submits a statement(s) that a pre-examination search was made, listing the field of search by class and subclass, publication, Chemical Abstracts, foreign patents, etc. The pre-examination search ***must be directed to the invention as claimed*** in the application for which special status is requested. A search made by a foreign patent office satisfies this requirement;

(d) Submits one copy each of the references deemed most closely related to the subject matter encompassed by the claims if said references are not already of record; and

(e) Submits a detailed discussion of the references, which discussion points out, with the particularity required by 37 CFR 1.111 (b) and (c), how the claimed subject matter is patentable over the references.

With respect to requirement (d) above, the petition does not contain a full copy of the Japanese references cited. Complete copies are required for the examiner to properly determine whether the claims are patentable.

Applicant's petition fails to provide a search directed to claim 41 as required by section (c) above. Claim 41 recites an "electronic program guide" classified in class 725 (e.g. see Subclasses 39-52).

Because the petition fails to satisfy all of the criteria set forth above, the petition to make special is **DISMISSED**.

Any requests for reconsideration must be filed within TWO (2) MONTHS from the mailing date of this decision.

The application will be returned to the examiner's docket to await treatment on the merits in the normal order of examination.

Pat Salce
Workgroup 2170 Quality Assurance Specialist,
Tech. Center 2100
Computer Architecture, Software and Information Security
571-272-3610

UNITED STATES PATENT AND TRADEMARK OFFICE

Commissioner for Patents
United States Patent and Trademark Office
P.O. Box 1450
Alexandria, VA 22313-1450
www.uspto.gov

MAILED

JUN 28 2007

TECHNOLOGY CENTER 2100

POTOMAC PATENT GROUP, PLLC
P. O. BOX 270
FREDERICKSBURG, VA 22404

In re Application of: Frank J. Wroblewski.
Application No. 11/417,764
Filed: May 4, 2006
For: METHODS AND SYSTEMS FOR SCROLLING AND POINTING IN USER INTERFACES

TO MAKE SPECIAL
(ACCELERATED EXAMINATION)
UNDER M.P.E.P. §708.02 (VIII)
DECISION ON PETITION

This is a decision on the renewed petition to make special under 37 C.F.R. §102(d) and M.P.E.P. §708.02(VIII): Accelerated Examination, filed on April 26, 2007 of the original petition filed August 24, 2006 which was dismissed on February 28, 2007.

The Petition is **GRANTED**.

M.P.E.P. §708.02, Section VIII which sets out the prerequisites for a grantable petition for Accelerated Examination under 37 C.F.R. §1.102(d) states in relevant part:

A new application (one which has not received any examination by the examiner) may be granted special status provided that applicant (and this term includes applicant's attorney or agent) complies with each of the following items:

(a) Submits a petition to make special accompanied by the fee set forth in 37 CFR 1.17(h);

(b) Presents all claims directed to a single invention, or if the Office determines that all the claims presented are not obviously directed to a single invention, will make an election without traverse as a prerequisite to the grant of special status;

(c) Submits a statement(s) that a pre-examination search was made, listing the field of search by class and subclass, publication, Chemical Abstracts, foreign patents, etc. The pre-examination search must be directed to the invention as claimed in the application for which special status is requested. A search made by a foreign patent office satisfies this requirement;

(d) Submits one copy each of the references deemed most closely related to the subject matter encompassed by the claims if said references are not already of record; and

(e) Submits a detailed discussion of the references, which discussion points out, with the particularity required by 37 CFR 1.111 (b) and (c), how the claimed subject matter is patentable over the references.

The dismissal decision stated that the original the petition fails to adequately meet the requirements (c) and (d) as set forth supra. Those deficiencies have been corrected.

Petition to Make Special is hereby **GRANTED** because all the requirements for special status under MPEP § 708.02(VIII) have been met.

The application file if being forwarded to the Examiner for accelerated examination in accordance with M.P.E.P. §708.02, Section VIII. If the application is subsequently allowed, it will be given priority for printing. See M.P.E.P. §1309.

Tod Swann
Workgroup Quality Assurance Specialist,
Computer Architecture, Software and Information Security
571-272-3612

UNITED STATES PATENT AND TRADEMARK OFFICE

Commissioner for Patents
United States Patent and Trademark Office
P.O. Box 1450
Alexandria, VA 22313-1450
www.uspto.gov

POTOMAC PATENT GROUP PLLC
P.O. BOX 270
FREDERICKSBURG, VA 22404

MAILED

MAR 05 2010

OFFICE OF PETITIONS

In re Application of :
Frank J. Wroblewski :
Application No. 11/417,764 :
Filed: May 4, 2006 :
Attorney Docket No. 0320-073

NOTICE

This is a notice regarding your request for acceptance of a fee deficiency submission under 37 CFR 1.28. On September 1, 1998, the Court of Appeals for the Federal Circuit held that 37 CFR 1.28(c) is the sole provision governing the time for correction of the erroneous payment of the issue fee as a small entity. **See DH Technology v. Synergystex International, Inc. 154 F.3d 1333, 47 USPQ2d 1865 (Fed. Cir. Sept. 1, 1998).**

The Office no longer investigates or rejects original or reissue applications under 37 CFR 1.56. **1098 Off. Gaz. Pat. Office 502 (January 3, 1989)**. Therefore, nothing in this Notice is intended to imply that an investigation was done.

Your fee deficiency submission under 37 CFR 1.28 is hereby **ACCEPTED**.

Inquiries related to this communication should be directed to Irvin Dingle at (571) 272-3210.

Irvin Dingle
Petitions Examiner
Office of Petitions

UNITED STATES PATENT AND TRADEMARK OFFICE

UNITED STATES DEPARTMENT OF COMMERCE
United States Patent and Trademark Office
Address: COMMISSIONER FOR PATENTS
P.O. Box 1450
Alexandria, Virginia 22313-1450
www.uspto.gov

Jeffrey C. Hood
Meyertons, Hood, Kivlin, Kowert & Goetzel, P.C.
P.O. Box 398
Austin, TX 78767

Mail Date: 04/21/2010

Applicant	: Alan D. Berenbaum	: DECISION ON REQUEST FOR
Patent Number	: 7631110	: RECALCULATION of PATENT
Issue Date	: 12/08/2009	: TERM ADJUSTMENT IN VIEW
Appliction No	: 11/417,775	: OF WYETH AND NOTICE OF INTENT TO
Filed	: 05/03/2006	: ISSUE CERTIFICATE OF CORRECTION
		:

The Request for Recalculation is **GRANTED** to the extent indicated.

The patent term adjustment has been determined to be **844** days. The USPTO will *sua sponte* issue a certificate of correction reflecting the amount of PTA days determined by the recalculation.

Prior to the issuance of the certificate of correction, the USPTO will afford patentee an opportunity to be heard and request reconsideration. Accordingly, patentee has **one month or thirty (30) days**, whichever is longer, to file a request for reconsideration of this patent term adjustment calculation. See 35 U.S.C. 154(b)(3)(B)(ii) and 37 CFR 1.322(a)(4). No extensions of time will be granted under 37 CFR 1.136.

Patentee should use document code PET.OP if electronically filing a request for reconsideration of this patent term adjustment calculation. The patentee must also include the information required by 37 CFR 1.705(b)(2) and the fee required by 37 CFR 1.18(e). If patentee does not file a timely request for reconsideration of this patent term adjustment calculation including the information required by 37 CFR 1.705(b)(2) and the fee required by 37 CFR 1.18(e), the USPTO will issue a certificate of correction reflecting the PTA determination noted above.

Patentee should be aware that in order to preserve the right to review in the United States District Court for the District of Columbia of the USPTO patent term adjustment determination, patentee must ensure that he or she also take the steps required under 35 U.S.C. 154(b)(4)(A) in a timely manner. Nothing in the request for recalculation should be construed as providing an alternative time frame for commencing a civil action under 35 U.S.C. 154(b)(4)(A).

Any questions concerning this decision should be directed to the Office of Patent Legal Administration at 571-272-7702.

UNITED STATES PATENT AND TRADEMARK OFFICE

UNITED STATES DEPARTMENT OF COMMERCE
United States Patent and Trademark Office
Address: COMMISSIONER FOR PATENTS
P.O. Box 1450
Alexandria, Virginia 22313-1450
www.uspto.gov

ALSTON & BIRD LLP
BANK OF AMERICA PLAZA
101 SOUTH TRYON STREET, SUITE 4000
CHARLOTTE, NC 28280-4000

Mail Date: 04/21/2010

Applicant	: Raphael Marcelpoil	: DECISION ON REQUEST FOR
Patent Number	: 7602954	: RECALCULATION of PATENT
Issue Date	: 10/13/2009	: TERM ADJUSTMENT IN VIEW
Appliction No	: 11/417,781	: OF WYETH AND NOTICE OF INTENT TO
Filed	: 05/04/2006	: ISSUE CERTIFICATE OF CORRECTION
		:

The Request for Recalculation is **GRANTED** to the extent indicated.

The patent term adjustment has been determined to be **832** days. The USPTO will *sua sponte* issue a certificate of correction reflecting the amount of PTA days determined by the recalculation.

Prior to the issuance of the certificate of correction, the USPTO will afford patentee an opportunity to be heard and request reconsideration. Accordingly, patentee has **one month or thirty (30) days**, whichever is longer, to file a request for reconsideration of this patent term adjustment calculation. See 35 U.S.C. 154(b)(3)(B)(ii) and 37 CFR 1.322(a)(4). No extensions of time will be granted under 37 CFR 1.136.

Patentee should use document code PET.OP if electronically filing a request for reconsideration of this patent term adjustment calculation. The patentee must also include the information required by 37 CFR 1.705(b)(2) and the fee required by 37 CFR 1.18(e). If patentee does not file a timely request for reconsideration of this patent term adjustment calculation including the information required by 37 CFR 1.705(b)(2) and the fee required by 37 CFR 1.18(e), the USPTO will issue a certificate of correction reflecting the PTA determination noted above.

Patentee should be aware that in order to preserve the right to review in the United States District Court for the District of Columbia of the USPTO patent term adjustment determination, patentee must ensure that he or she also take the steps required under 35 U.S.C. 154(b)(4)(A) in a timely manner. Nothing in the request for recalculation should be construed as providing an alternative time frame for commencing a civil action under 35 U.S.C. 154(b)(4)(A).

Any questions concerning this decision should be directed to the Office of Patent Legal Administration at 571-272-7702.

UNITED STATES PATENT AND TRADEMARK OFFICE

COMMISSIONER FOR PATENTS
UNITED STATES PATENT AND TRADEMARK OFFICE
P.O. BOX 1450
ALEXANDRIA, VA 22313-1450
www.uspto.gov

Albert T. Keyack
260 South Broad Street
Philadelphia PA 19102

COPY MAILED

APR 18 2007

OFFICE OF PETITIONS

In re Application of
Marmar
Application No. 11/417,822
Filed: May 4, 2006
Atty. Dkt. No.: 09999-
Marmer

DECISION ON PETITION

This is a decision on the petition under 37 CFR 1.181, filed December 21, 2006, to withdraw the holding of abandonment.

The petition is **GRANTED**.

The application was held abandoned for failure to timely submit a properly reply to the Office communication mailed June 2, 2006. The Office communication set a two month shortened statutory period of time for reply. This decision precedes Notice of Abandonment.

Petitioner argues that the Office communication was not received and further indicates that the Office communication was returned to the Office.

Petitioner's arguments have been carefully considered and found convincing.

A review of the official application file reveals that the Office communication was, for reasons unknown to the Office, returned to the Office by the United States Postal Service, despite the fact that the Office communication was properly addressed to applicant. There is no indication in the official record that an attempt was made by the Office to re-mail the Office communication.

Accordingly, Notice of Abandonment is **WITHDRAWN** and the holding of abandonment is hereby **VACATED**.

This application is being forwarded to the Office of Initial Patent Examination for further processing.

Telephone inquiries concerning this matter may be directed to the undersigned at 571-272-3205.

Alesia M. Brown
Petitions Attorney
Office of Petitions

UNITED STATES PATENT AND TRADEMARK OFFICE

UNITED STATES DEPARTMENT OF COMMERCE
United States Patent and Trademark Office
Address: COMMISSIONER FOR PATENTS
P.O. Box 1450
Alexandria, Virginia 22313-1450
www.uspto.gov

THE FARRELL LAW FIRM, LLP
290 Broadhollow Road
Suite 210E
Melville, NY 11747

Mail Date: 04/21/2010

Applicant	: Beom-Soo Cho	: DECISION ON REQUEST FOR
Patent Number	: 7590426	: RECALCULATION of PATENT
Issue Date	: 09/15/2009	: TERM ADJUSTMENT IN VIEW
Appliction No	: 11/417,827	: OF WYETH AND NOTICE OF INTENT TO
Filed	: 05/04/2006	: ISSUE CERTIFICATE OF CORRECTION
		:

The Request for Recalculation is **GRANTED** to the extent indicated.

The patent term adjustment has been determined to be **586** days. The USPTO will *sua sponte* issue a certificate of correction reflecting the amount of PTA days determined by the recalculation.

Prior to the issuance of the certificate of correction, the USPTO will afford patentee an opportunity to be heard and request reconsideration. Accordingly, patentee has **one month or thirty (30) days**, whichever is longer, to file a request for reconsideration of this patent term adjustment calculation. See 35 U.S.C. 154(b)(3)(B)(ii) and 37 CFR 1.322(a)(4). No extensions of time will be granted under 37 CFR 1.136.

Patentee should use document code PET.OP if electronically filing a request for reconsideration of this patent term adjustment calculation. The patentee must also include the information required by 37 CFR 1.705(b)(2) and the fee required by 37 CFR 1.18(e). If patentee does not file a timely request for reconsideration of this patent term adjustment calculation including the information required by 37 CFR 1.705(b)(2) and the fee required by 37 CFR 1.18(e), the USPTO will issue a certificate of correction reflecting the PTA determination noted above.

Patentee should be aware that in order to preserve the right to review in the United States District Court for the District of Columbia of the USPTO patent term adjustment determination, patentee must ensure that he or she also take the steps required under 35 U.S.C. 154(b)(4)(A) in a timely manner. Nothing in the request for recalculation should be construed as providing an alternative time frame for commencing a civil action under 35 U.S.C. 154(b)(4)(A).

Any questions concerning this decision should be directed to the Office of Patent Legal Administration at 571-272-7702.

UNITED STATES PATENT AND TRADEMARK OFFICE

Commissioner for Patents
United States Patent and Trademark Office
P.O. Box 1450
Alexandria, VA 22313-1450
www.uspto.gov

MICHAEL BEST & FRIEDRICH LLP
TWO PRUDENTIAL PLAZA
180 NORTH STETSON AVENUE,
SUITE 2000
CHICAGO, IL 60601

COPY MAILED

NOV 1 0 2008

OFFICE OF PETITIONS

In re Application of	:	
R. Giovanni FIMA	:	
Application No. 11/417,837	:	DECISION ON PETITION
Filed: May 4, 2006	:	TO WITHDRAW
Attorney Docket No. 034584-9012	:	FROM RECORD
	:	

This is a decision on the Request to Withdraw as attorney or agent of record under 37 C.F.R. § 1.36(b), filed September 22, 2008.

The request is **APPROVED**.

A grantable request to withdraw as attorney/agent of record must be signed by every attorney/agent seeking to withdraw or contain a clear indication that one attorney is signing on behalf of another/others. The Office requires the practitioner(s) requesting withdrawal to certify that he, she, or they have: (1) given reasonable notice to the client, prior to the expiration of the response period, that the practitioner(s) intends to withdraw from employment; (2) delivered to the client or a duly authorized representative of the client all papers and property (including funds) to which the client is entitled; and (3) notified the client of any responses that may be due and the time frame within which the client must respond, pursuant 37 CFR 10.40(c).

The request was signed by Larry L. Saret on behalf of the attorneys of record associated with Customer No. 01131.

The attorneys of record associated with Customer No. 01131 have been withdrawn.

Applicant is reminded that there is no attorney of record at this time.

The correspondence address of record has been changed and the new correspondence address is the address indicated below until otherwise properly notified by the applicant.

Telephone inquiries concerning this decision should be directed to the undersigned at 571-272-6735.

Diane Goodwyn
Petitions Examiner
Office of Petitions

cc: R. GIOVANNI FIMA
2392 FIRE MOUNTAIN DRIVE
OCEANSIDE, CA 92054

UNITED STATES PATENT AND TRADEMARK OFFICE

Commissioner for Patents
United States Patent and Trademark Office
P.O. Box 1450
Alexandria, VA 22313-1450
www.uspto.gov

Charles E. Baxley, Esquire
90 John Street
Suite 309
New York, NY 10038

COPY MAILED

OCT 3 0 2008

OFFICE OF PETITIONS

In re Application of	:	
David Tang	:	
Application No. 11/417,845	:	DECISION ON PETITION
Filed: May 4, 2006	:	TO WITHDRAW
Attorney Docket No. 16400 B	:	FROM RECORD
	:	

This is a decision on the Request to Withdraw as attorney or agent of record under 37 C.F.R. § 1.36(b), filed August 21, 2008.

The request is **APPROVED**.

A grantable request to withdraw as attorney/agent of record must be signed by every attorney/agent seeking to withdraw or contain a clear indication that one attorney is signing on behalf of another/others. A request to withdraw will not be approved unless at least 30 (thirty) days would remain between the date of approval and the later of the expiration date of a time to file a response or the expiration date of the maximum time period which can be extended under 37 C.F.R. § 1.136(a).

The request was signed by Charles E. Baxley, Esquire on behalf of all attorneys of record. All attorneys/agents have been withdrawn. Applicant is reminded that there is no attorney of record at this time.

All future correspondence will be directed to the first named inventor Joe Smith at the address indicated below.

Telephone inquiries concerning this decision should be directed to Terri Williams at 571-272-2991.

Terri Williams

Terri Williams
Petitions Examiner
Office of Petitions

cc: **David Tang**
9707 63 Road
Suite 2C
Rego Park, NY 11374

cc: **David Tang**
3609 Bison Hill Lane
Raleigh, NC 27604

UNITED STATES PATENT AND TRADEMARK OFFICE

UNITED STATES DEPARTMENT OF COMMERCE
United States Patent and Trademark Office
Address: COMMISSIONER FOR PATENTS
P.O. Box 1450
Alexandria, Virginia 22313-1450
www.uspto.gov

APPLICATION NUMBER	FILING OR 371(C) DATE	FIRST NAMED APPLICANT	ATTY. DOCKET NO./TITLE
11/417,845	05/04/2006	David Tang	16400 B

CONFIRMATION NO. 1099

POWER OF ATTORNEY NOTICE

36672
CHARLES E. BAXLEY, ESQUIRE
90 JOHN STREET
SUITE 309
NEW YORK, NY 10038

OC000000032859902

Date Mailed: 10/29/2008

NOTICE REGARDING CHANGE OF POWER OF ATTORNEY

This is in response to the Power of Attorney filed 08/21/2008.

- The withdrawal as attorney in this application has been accepted. Future correspondence will be mailed to the new address of record. 37 CFR 1.33.

/ddinh/

Office of Data Management, Application Assistance Unit (571) 272-4000, or (571) 272-4200, or 1-888-786-0101

UNITED STATES PATENT AND TRADEMARK OFFICE

Commissioner for Patents
United States Patent and Trademark Office
P.O. Box 1450
Alexandria, VA 22313-1450
www.uspto.gov

Charles E. Baxley, Esquire
90 John Street
Suite 309
New York, NY 10038

COPY MAILED

OCT 3 0 2008

OFFICE OF PETITIONS

In re Application of	:	
David Tang	:	
Application No. 11/417,845	:	DECISION ON PETITION
Filed: May 4, 2006	:	TO WITHDRAW
Attorney Docket No. 16400 B	:	FROM RECORD
	:	

This is a decision on the Request to Withdraw as attorney or agent of record under 37 C.F.R. § 1.36(b), filed August 21, 2008.

The request is **APPROVED**.

A grantable request to withdraw as attorney/agent of record must be signed by every attorney/agent seeking to withdraw or contain a clear indication that one attorney is signing on behalf of another/others. A request to withdraw will not be approved unless at least 30 (thirty) days would remain between the date of approval and the later of the expiration date of a time to file a response or the expiration date of the maximum time period which can be extended under 37 C.F.R. § 1.136(a).

The request was signed by Charles E. Baxley, Esquire on behalf of all attorneys of record. All attorneys/agents have been withdrawn. Applicant is reminded that there is no attorney of record at this time.

All future correspondence will be directed to the first named inventor Joe Smith at the address indicated below.

UNITED STATES PATENT AND TRADEMARK OFFICE

UNITED STATES DEPARTMENT OF COMMERCE
United States Patent and Trademark Office
Address: COMMISSIONER FOR PATENTS
P.O. Box 1450
Alexandria, Virginia 22313-1450
www.uspto.gov

APPLICATION NUMBER	FILING OR 371(C) DATE	FIRST NAMED APPLICANT	ATTY. DOCKET NO./TITLE
11/417,845	05/04/2006	David Tang	16400 B

CONFIRMATION NO. 1099

POWER OF ATTORNEY NOTICE

36672
CHARLES E. BAXLEY, ESQUIRE
90 JOHN STREET
SUITE 309
NEW YORK, NY 10038

OC000000032859902

Date Mailed: 10/29/2008

NOTICE REGARDING CHANGE OF POWER OF ATTORNEY

This is in response to the Power of Attorney filed 08/21/2008.

- The withdrawal as attorney in this application has been accepted. Future correspondence will be mailed to the new address of record. 37 CFR 1.33.

/ddinh/

Office of Data Management, Application Assistance Unit (571) 272-4000, or (571) 272-4200, or 1-888-786-0101

UNITED STATES PATENT AND TRADEMARK OFFICE

UNITED STATES DEPARTMENT OF COMMERCE
United States Patent and Trademark Office
Address: COMMISSIONER FOR PATENTS
P.O. Box 1450
Alexandria, Virginia 22313-1450
www.uspto.gov

FISH & RICHARDSON PC
P.O. BOX 1022
MINNEAPOLIS, MN 55440-1022

Mail Date: 04/20/2010

Applicant	: Torsten Scheuermann	: DECISION ON REQUEST FOR
Patent Number	: 7604703	: RECALCULATION of PATENT
Issue Date	: 10/20/2009	: TERM ADJUSTMENT IN VIEW
Appliction No	: 11/417,856	: OF WYETH AND NOTICE OF INTENT TO
Filed	: 05/03/2006	: ISSUE CERTIFICATE OF CORRECTION
		:

The Request for Recalculation is **GRANTED** to the extent indicated.

The patent term adjustment has been determined to be **433** days. The USPTO will *sua sponte* issue a certificate of correction reflecting the amount of PTA days determined by the recalculation.

Prior to the issuance of the certificate of correction, the USPTO will afford patentee an opportunity to be heard and request reconsideration. Accordingly, patentee has **one month or thirty (30) days**, whichever is longer, to file a request for reconsideration of this patent term adjustment calculation. See 35 U.S.C. 154(b)(3)(B)(ii) and 37 CFR 1.322(a)(4). No extensions of time will be granted under 37 CFR 1.136.

Patentee should use document code PET.OP if electronically filing a request for reconsideration of this patent term adjustment calculation. The patentee must also include the information required by 37 CFR 1.705(b)(2) and the fee required by 37 CFR 1.18(e). If patentee does not file a timely request for reconsideration of this patent term adjustment calculation including the information required by 37 CFR 1.705(b)(2) and the fee required by 37 CFR 1.18(e), the USPTO will issue a certificate of correction reflecting the PTA determination noted above.

Patentee should be aware that in order to preserve the right to review in the United States District Court for the District of Columbia of the USPTO patent term adjustment determination, patentee must ensure that he or she also take the steps required under 35 U.S.C. 154(b)(4)(A) in a timely manner. Nothing in the request for recalculation should be construed as providing an alternative time frame for commencing a civil action under 35 U.S.C. 154(b)(4)(A).

Any questions concerning this decision should be directed to the Office of Patent Legal Administration at 571-272-7702.

UNITED STATES PATENT AND TRADEMARK OFFICE

Commissioner for Patents
United States Patent and Trademark Office
P.O. Box 1450
Alexandria, VA 22313-1450
www.uspto.gov

Morrison & Foerster LLP
12531 High Bluff Drive
Suite 100
San Diego, CA 92130-2040

COPY MAILED

AUG 0 2 2007

OFFICE OF PETITIONS

In re Application of	:	
Xiaoliang Bai et al.	:	
Application No. 11/417,862	:	DECISION ON PETITION
Filed: May 4, 2006	:	TO WITHDRAW
Attorney Docket No. 188122000420	:	FROM RECORD

This is a decision on the Request to Withdraw as attorney or agent of record under 37 C.F.R. § 1.36(b), filed March 14, 2007.

The request is **NOT APPROVED** as moot.

A review of the file record indicates that the power of attorney to Morrison & Foerster LLP has been revoked by the assignee of the patent application on April 26, 2007. Accordingly, the request to withdraw under 37 C.F.R. § 1.36(b) is moot.

All future communications from the Office will continue to be directed to the below-listed address until otherwise notified by applicant.

Telephone inquires concerning this decision should be directed to Terri Williams at 571-272-2991.

Terri Williams
Terri Williams
Petitions Examiner
Office of Petitions

cc: **San Francisco Office of**
Novak, Druce & Quigg LLP
1000 Louisiana Street, 53rd Floor
Houston, TX 77002

UNITED STATES PATENT AND TRADEMARK OFFICE

UNITED STATES DEPARTMENT OF COMMERCE
United States Patent and Trademark Office
Address: COMMISSIONER FOR PATENTS
P.O. Box 1450
Alexandria, Virginia 22313-1450
www.uspto.gov

Byrne Poh LLP
11 Broadway, Ste 865
New York, NY 10004

Mail Date: 04/21/2010

Applicant	: Asaf Zomet	: DECISION ON REQUEST FOR
Patent Number	: 7651282	: RECALCULATION of PATENT
Issue Date	: 01/26/2010	: TERM ADJUSTMENT IN VIEW
Appliction No	: 11/417,864	: OF WYETH AND NOTICE OF INTENT TO
Filed	: 05/04/2006	: ISSUE CERTIFICATE OF CORRECTION
		:

The Request for Recalculation is **GRANTED** to the extent indicated.

The patent term adjustment has been determined to be **706** days. The USPTO will *sua sponte* issue a certificate of correction reflecting the amount of PTA days determined by the recalculation.

Prior to the issuance of the certificate of correction, the USPTO will afford patentee an opportunity to be heard and request reconsideration. Accordingly, patentee has **one month or thirty (30) days**, whichever is longer, to file a request for reconsideration of this patent term adjustment calculation. See 35 U.S.C. 154(b)(3)(B)(ii) and 37 CFR 1.322(a)(4). No extensions of time will be granted under 37 CFR 1.136.

Patentee should use document code PET.OP if electronically filing a request for reconsideration of this patent term adjustment calculation. The patentee must also include the information required by 37 CFR 1.705(b)(2) and the fee required by 37 CFR 1.18(e). If patentee does not file a timely request for reconsideration of this patent term adjustment calculation including the information required by 37 CFR 1.705(b)(2) and the fee required by 37 CFR 1.18(e), the USPTO will issue a certificate of correction reflecting the PTA determination noted above.

Patentee should be aware that in order to preserve the right to review in the United States District Court for the District of Columbia of the USPTO patent term adjustment determination, patentee must ensure that he or she also take the steps required under 35 U.S.C. 154(b)(4)(A) in a timely manner. Nothing in the request for recalculation should be construed as providing an alternative time frame for commencing a civil action under 35 U.S.C. 154(b)(4)(A).

Any questions concerning this decision should be directed to the Office of Patent Legal Administration at 571-272-7702.

UNITED STATES PATENT AND TRADEMARK OFFICE

UNITED STATES DEPARTMENT OF COMMERCE
United States Patent and Trademark Office
Address: COMMISSIONER FOR PATENTS
P.O. Box 1450
Alexandria, Virginia 22313-1450
www.uspto.gov

KNOBBE MARTENS OLSON & BEAR LLP
2040 MAIN STREET
FOURTEENTH FLOOR
IRVINE, CA 92614

Mail Date: 04/20/2010

Applicant	: Niels Skjaerbaek	: DECISION ON REQUEST FOR
Patent Number	: 7576078	: RECALCULATION of PATENT
Issue Date	: 08/18/2009	: TERM ADJUSTMENT IN VIEW
Appliction No	: 11/417,865	: OF WYETH AND NOTICE OF INTENT TO
Filed	: 05/03/2006	: ISSUE CERTIFICATE OF CORRECTION
		:

The Request for Recalculation is **GRANTED** to the extent indicated.

The patent term adjustment has been determined to be **0** days. The USPTO will *sua sponte* issue a certificate of correction reflecting the amount of PTA days determined by the recalculation.

Prior to the issuance of the certificate of correction, the USPTO will afford patentee an opportunity to be heard and request reconsideration. Accordingly, patentee has **one month or thirty (30) days**, whichever is longer, to file a request for reconsideration of this patent term adjustment calculation. See 35 U.S.C. 154(b)(3)(B)(ii) and 37 CFR 1.322(a)(4). No extensions of time will be granted under 37 CFR 1.136.

Patentee should use document code PET.OP if electronically filing a request for reconsideration of this patent term adjustment calculation. The patentee must also include the information required by 37 CFR 1.705(b)(2) and the fee required by 37 CFR 1.18(e). If patentee does not file a timely request for reconsideration of this patent term adjustment calculation including the information required by 37 CFR 1.705(b)(2) and the fee required by 37 CFR 1.18(e), the USPTO will issue a certificate of correction reflecting the PTA determination noted above.

Patentee should be aware that in order to preserve the right to review in the United States District Court for the District of Columbia of the USPTO patent term adjustment determination, patentee must ensure that he or she also take the steps required under 35 U.S.C. 154(b)(4)(A) in a timely manner. Nothing in the request for recalculation should be construed as providing an alternative time frame for commencing a civil action under 35 U.S.C. 154(b)(4)(A).

Any questions concerning this decision should be directed to the Office of Patent Legal Administration at 571-272-7702.

UNITED STATES PATENT AND TRADEMARK OFFICE

UNITED STATES DEPARTMENT OF COMMERCE
United States Patent and Trademark Office
Address: COMMISSIONER FOR PATENTS
P.O. Box 1450
Alexandria, Virginia 22313-1450
www.uspto.gov

KNOBBE MARTENS OLSON & BEAR LLP
2040 MAIN STREET
FOURTEENTH FLOOR
IRVINE, CA 92614

Mail Date: 04/20/2010

Applicant	: Niels Skjaerbaek	: DECISION ON REQUEST FOR
Patent Number	: 7576100	: RECALCULATION of PATENT
Issue Date	: 08/18/2009	: TERM ADJUSTMENT IN VIEW
Appliction No	: 11/417,867	: OF WYETH AND NOTICE OF INTENT TO
Filed	: 05/03/2006	: ISSUE CERTIFICATE OF CORRECTION
		:

The Request for Recalculation is **GRANTED** to the extent indicated.

The patent term adjustment has been determined to be **0** days. The USPTO will *sua sponte* issue a certificate of correction reflecting the amount of PTA days determined by the recalculation.

Prior to the issuance of the certificate of correction, the USPTO will afford patentee an opportunity to be heard and request reconsideration. Accordingly, patentee has **one month or thirty (30) days**, whichever is longer, to file a request for reconsideration of this patent term adjustment calculation. See 35 U.S.C. 154(b)(3)(B)(ii) and 37 CFR 1.322(a)(4). No extensions of time will be granted under 37 CFR 1.136.

Patentee should use document code PET.OP if electronically filing a request for reconsideration of this patent term adjustment calculation. The patentee must also include the information required by 37 CFR 1.705(b)(2) and the fee required by 37 CFR 1.18(e). If patentee does not file a timely request for reconsideration of this patent term adjustment calculation including the information required by 37 CFR 1.705(b)(2) and the fee required by 37 CFR 1.18(e), the USPTO will issue a certificate of correction reflecting the PTA determination noted above.

Patentee should be aware that in order to preserve the right to review in the United States District Court for the District of Columbia of the USPTO patent term adjustment determination, patentee must ensure that he or she also take the steps required under 35 U.S.C. 154(b)(4)(A) in a timely manner. Nothing in the request for recalculation should be construed as providing an alternative time frame for commencing a civil action under 35 U.S.C. 154(b)(4)(A).

Any questions concerning this decision should be directed to the Office of Patent Legal Administration at 571-272-7702.

SPE RESPONSE FOR CERTIFICATE OF CORRECTION

Paper No.:20100625A

DATE : June 25, 2010

TO SPE OF : ART UNIT 3684

SUBJECT : Request for Certificate of Correction on Patent No.: 7680724

A response is requested with respect to the accompanying request for a certificate of correction.

Please complete this form and return with file, within **7** days to:
Certificates of Correction Branch - PK 3-910
Palm location **7590** - Tel. No. 305-8201

With respect to the change(s) requested, correcting Office and/or Applicant's errors, should the patent read as shown in the certificate of correction? No new matter should be introduced, nor should the scope or meaning of the claims be changed.

Thank You For Your Assistance **Certificates of Correction Branch**

The request for issuing the above-identified correction(s) is hereby:
Note your decision on the appropriate box.

☒ **Approved** **All** changes apply.

☐ **Approved in Part** Specify below which changes **do not** apply.

☐ **Denied** State the reasons for denial below.

Comments:

All the supporting documents were submitted for the correction of inventorship of the patent application no. 11/417871.

SPE: Andrew Andrew **Art Unit** 3684

UNITED STATES PATENT AND TRADEMARK OFFICE

UNITED STATES DEPARTMENT OF COMMERCE
United States Patent and Trademark Office
Address: COMMISSIONER FOR PATENTS
P.O. Box 1450
Alexandria, Virginia 22313-1450
www.uspto.gov

APPLICATION NO.	FILING DATE	FIRST NAMED INVENTOR	ATTORNEY DOCKET NO.	CONFIRMATION NO.
11/417,871	05/03/2006	Gary Allen Kemp II	02-211-Z2	8315

39310 7590 06/30/2010
MBHB/TRADING TECHNOLOGIES
300 SOUTH WACKER DRIVE
SUITE 3200
CHICAGO, IL 60606

EXAMINER
SWARTZ, JAMIE H

ART UNIT	PAPER NUMBER
3684	

NOTIFICATION DATE	DELIVERY MODE
06/30/2010	ELECTRONIC

Please find below and/or attached an Office communication concerning this application or proceeding.

The time period for reply, if any, is set in the attached communication.

Notice of the Office communication was sent electronically on above-indicated "Notification Date" to the following e-mail address(es):

docketing@mbhb.com
williamsd@mbhb.com

UNITED STATES PATENT AND TRADEMARK OFFICE

Commissioner for Patents
United States Patent and Trademark Office
P.O. Box 1450
Alexandria, VA 22313-1450
www.uspto.gov

JUN 29 2010

Jeffrey P. Armstrong
McDonnell Boehnen Hulbert & Berghoff LLP
300 South Wacker Drive
Chicago, IL 60606

In re Application of	:	
A. (Tony) W. Bradley	:	Treatment of Request
Application No. 11/417871	:	Under 37 CFR 1.48 Petition
Filed: May 3, 2006	:	Under 37 CFR 1.324
For: **TRADING TOOLS FOR**	:	
ELECTRONIC TRADING	:	

This is a decision on the request under 37 CFR 1.48, filed February 16, 2010. In view of the fact that the patent has already issued, the request under 37 CFR 1.48 has been treated as a petition to correct inventorship under 37 CFR 1.324

The petition is **GRANTED**.

The patented file is being forwarded to Certificate of Corrections Branch for issuance of a certificate naming only the actual inventor or inventors.

Any questions regarding this letter should be directed to Kambiz Abdi at (571) 272-6702

/Kambiz Abdi/

Kambiz Abdi
Supervisory Patent Examiner Art Unit 3684

SPE RESPONSE FOR CERTIFICATE OF CORRECTION

Paper No.: _____

DATE : 12-29-09

TO SPE OF : ART UNIT 3693

SUBJECT : Request for Certificate of Correction for Appl. No.: 11/417881 Patent No.: 7509283

Please respond to this request for a certificate of correction within 7 days.

FOR IFW FILES:

Please review the requested changes/corrections as shown in the **COCIN** document(s) in the IFW application image. No new matter should be introduced, nor should the scope or meaning of the claims be changed.

Please complete the response (see below) and forward the completed response to scanning using document code **COCX**.

FOR PAPER FILES:

Please review the requested changes/corrections as shown in the attached certificate of correction. Please complete this form (see below) and forward it with the file to:

Certificates of Correction Branch (CofC)
Randolph Square – 9D10-A
Palm Location 7580

Angela Green 703-756-1541
Certificates of Correction Branch
703-756-1814

Thank You For Your Assistance

The request for issuing the above-identified correction(s) is hereby:
Note your decision on the appropriate box.

- ☒ **Approved** — **All** changes apply.
- ☐ **Approved in Part** — Specify below which changes **do not** apply.
- ☐ **Denied** — State the reasons for denial below.

Comments: The Certification of correction only corrects a typographical error.

/James Kramer/ 3693

SPE **Art Unit**

UNITED STATES PATENT AND TRADEMARK OFFICE

UNITED STATES DEPARTMENT OF COMMERCE
United States Patent and Trademark Office
Address: COMMISSIONER FOR PATENTS
P.O. Box 1450
Alexandria, Virginia 22313-1450
www.uspto.gov

KNOBBE MARTENS OLSON & BEAR LLP
2040 MAIN STREET
FOURTEENTH FLOOR
IRVINE, CA 92614

Mail Date: 04/20/2010

Applicant	: Steven F. Bolling	: DECISION ON REQUEST FOR
Patent Number	: 7591778	: RECALCULATION of PATENT
Issue Date	: 09/22/2009	: TERM ADJUSTMENT IN VIEW
Appliction No	: 11/417,889	: OF WYETH AND NOTICE OF INTENT TO
Filed	: 05/03/2006	: ISSUE CERTIFICATE OF CORRECTION
		:

The Request for Recalculation is **GRANTED** to the extent indicated.

The patent term adjustment has been determined to be **323** days. The USPTO will *sua sponte* issue a certificate of correction reflecting the amount of PTA days determined by the recalculation.

Prior to the issuance of the certificate of correction, the USPTO will afford patentee an opportunity to be heard and request reconsideration. Accordingly, patentee has **one month or thirty (30) days**, whichever is longer, to file a request for reconsideration of this patent term adjustment calculation. See 35 U.S.C. 154(b)(3)(B)(ii) and 37 CFR 1.322(a)(4). No extensions of time will be granted under 37 CFR 1.136.

Patentee should use document code PET.OP if electronically filing a request for reconsideration of this patent term adjustment calculation. The patentee must also include the information required by 37 CFR 1.705(b)(2) and the fee required by 37 CFR 1.18(e). If patentee does not file a timely request for reconsideration of this patent term adjustment calculation including the information required by 37 CFR 1.705(b)(2) and the fee required by 37 CFR 1.18(e), the USPTO will issue a certificate of correction reflecting the PTA determination noted above.

Patentee should be aware that in order to preserve the right to review in the United States District Court for the District of Columbia of the USPTO patent term adjustment determination, patentee must ensure that he or she also take the steps required under 35 U.S.C. 154(b)(4)(A) in a timely manner. Nothing in the request for recalculation should be construed as providing an alternative time frame for commencing a civil action under 35 U.S.C. 154(b)(4)(A).

Any questions concerning this decision should be directed to the Office of Patent Legal Administration at 571-272-7702.

UNITED STATES PATENT AND TRADEMARK OFFICE

UNITED STATES DEPARTMENT OF COMMERCE
United States Patent and Trademark Office
Address: COMMISSIONER FOR PATENTS
P.O. Box 1450
Alexandria, Virginia 22313-1450
www.uspto.gov

KNOBBE MARTENS OLSON & BEAR LLP
2040 MAIN STREET
FOURTEENTH FLOOR
IRVINE, CA 92614

Mail Date: 04/20/2010

Applicant	: Steven F. Bolling	: DECISION ON REQUEST FOR
Patent Number	: 7614997	: RECALCULATION of PATENT
Issue Date	: 11/10/2009	: TERM ADJUSTMENT IN VIEW
Appliction No	: 11/417,905	: OF WYETH AND NOTICE OF INTENT TO
Filed	: 05/03/2006	: ISSUE CERTIFICATE OF CORRECTION
		:

The Request for Recalculation is **GRANTED** to the extent indicated.

The patent term adjustment has been determined to be **374** days. The USPTO will *sua sponte* issue a certificate of correction reflecting the amount of PTA days determined by the recalculation.

Prior to the issuance of the certificate of correction, the USPTO will afford patentee an opportunity to be heard and request reconsideration. Accordingly, patentee has **one month or thirty (30) days**, whichever is longer, to file a request for reconsideration of this patent term adjustment calculation. See 35 U.S.C. 154(b)(3)(B)(ii) and 37 CFR 1.322(a)(4). No extensions of time will be granted under 37 CFR 1.136.

Patentee should use document code PET.OP if electronically filing a request for reconsideration of this patent term adjustment calculation. The patentee must also include the information required by 37 CFR 1.705(b)(2) and the fee required by 37 CFR 1.18(e). If patentee does not file a timely request for reconsideration of this patent term adjustment calculation including the information required by 37 CFR 1.705(b)(2) and the fee required by 37 CFR 1.18(e), the USPTO will issue a certificate of correction reflecting the PTA determination noted above.

Patentee should be aware that in order to preserve the right to review in the United States District Court for the District of Columbia of the USPTO patent term adjustment determination, patentee must ensure that he or she also take the steps required under 35 U.S.C. 154(b)(4)(A) in a timely manner. Nothing in the request for recalculation should be construed as providing an alternative time frame for commencing a civil action under 35 U.S.C. 154(b)(4)(A).

Any questions concerning this decision should be directed to the Office of Patent Legal Administration at 571-272-7702.

Best Available Copy

UNITED STATES PATENT AND TRADEMARK OFFICE

Commissioner for Patents
United States Patent and Trademark Office
P.O. Box 1450
Alexandria, VA 22313-1450
www.uspto.gov

MBHB/TRADING TECHNOLOGIES
300 SOUTH WACKER DRIVE
SUITE 3200
CHICAGO IL 60606

COPY MAILED
SEP 19 2008
OFFICE OF PETITIONS

In re Patent No. 7,389,264 :
Issue Date: June 17, 2008 :
Application No. 11/417,915 : ON PETITION
Filed: May 3, 2006 :
Attorney Docket No. 02-184-Z :

This is a decision on the petition filed August 11, 2008, which is being treated as a request under 37 CFR 3.81(b)[1] to correct the name of the assignee on the front page of the above-identified patent by way of a Certificate of Correction.

The request is **GRANTED**.

Telephone inquiries concerning this decision may be directed to the undersigned at (571) 272-3215. Inquiries regarding the issuance of a certificate of correction should be directed to the Certificate of Correction Branch at (571) 272-4200.

The Certificates of Correction Branch will be notified of this decision granting the petition under 37 CFR 3.81(b) and directing issuance of the requested Certificate of Correction.

Charlema Grant
Petitions Attorney
Office of Petitions

[1] *See* MPEP 1309, subsection II; and Official Gazette of June 22, 2004.

UNITED STATES PATENT AND TRADEMARK OFFICE

UNITED STATES DEPARTMENT OF COMMERCE
United States Patent and Trademark Office
Address: COMMISSIONER FOR PATENTS
P.O. Box 1450
Alexandria, Virginia 22313-1450
www.uspto.gov

MACRONIX
C/O HAYNES BEFFEL & WOLFELD LLP
P. O. BOX 366
HALF MOON BAY, CA 94019

Mail Date: 04/21/2010

Applicant	: Hang-Ting Lue	: DECISION ON REQUEST FOR
Patent Number	: 7636257	: RECALCULATION of PATENT
Issue Date	: 12/22/2009	: TERM ADJUSTMENT IN VIEW
Appliction No	: 11/417,939	: OF WYETH AND NOTICE OF INTENT TO
Filed	: 05/04/2006	: ISSUE CERTIFICATE OF CORRECTION
		:

The Request for Recalculation is **GRANTED** to the extent indicated.

The patent term adjustment has been determined to be **902** days. The USPTO will *sua sponte* issue a certificate of correction reflecting the amount of PTA days determined by the recalculation.

Prior to the issuance of the certificate of correction, the USPTO will afford patentee an opportunity to be heard and request reconsideration. Accordingly, patentee has **one month or thirty (30) days**, whichever is longer, to file a request for reconsideration of this patent term adjustment calculation. See 35 U.S.C. 154(b)(3)(B)(ii) and 37 CFR 1.322(a)(4). No extensions of time will be granted under 37 CFR 1.136.

Patentee should use document code PET.OP if electronically filing a request for reconsideration of this patent term adjustment calculation. The patentee must also include the information required by 37 CFR 1.705(b)(2) and the fee required by 37 CFR 1.18(e). If patentee does not file a timely request for reconsideration of this patent term adjustment calculation including the information required by 37 CFR 1.705(b)(2) and the fee required by 37 CFR 1.18(e), the USPTO will issue a certificate of correction reflecting the PTA determination noted above.

Patentee should be aware that in order to preserve the right to review in the United States District Court for the District of Columbia of the USPTO patent term adjustment determination, patentee must ensure that he or she also take the steps required under 35 U.S.C. 154(b)(4)(A) in a timely manner. Nothing in the request for recalculation should be construed as providing an alternative time frame for commencing a civil action under 35 U.S.C. 154(b)(4)(A).

Any questions concerning this decision should be directed to the Office of Patent Legal Administration at 571-272-7702.

UNITED STATES PATENT AND TRADEMARK OFFICE

Commissioner for Patents
United States Patent and Trademark Office
P.O. Box 1450
Alexandria, VA 22313-1450
www.uspto.gov

KNOBBE MARTENS OLSON & BEAR LLP
2040 MAIN STREET
FOURTEENTH FLOOR
IRVINE CA 92614

COPY MAILED

OCT 0 2 2006

OFFICE OF PETITIONS

In re Application of	:	
KATES	:	
Application No. 11/417,941	:	DECISION ON PETITION
Filed: May 3, 2006	:	TO MAKE SPECIAL UNDER
Attorney Docket No. KATES.015DV5	:	37 CFR 1.102(c)(1)
	:	

This is a decision on the petition under 37 CFR 1.102(c)(1), filed August 14, 2006, to make the above-identified application special based on applicant's age as set forth in M.P.E.P. § 708.02, Section IV.

The petition is **GRANTED**.

A grantable petition to make an application special under 37 CFR 1.102(c)(1) and MPEP § 708.02, Section IV: Applicant's Age, must be accompanied by evidence showing that at least one of the applicants is 65 years of age, or more, such as a birth certificate or a statement by applicant. No fee is required.

The instant petition includes the affidavit of Lawrence Kates, attesting to his age. Accordingly, the above-identified application has been accorded "special" status.

Telephone inquiries concerning this decision should be directed to Monica A. Graves at 571-272-7253.

All other inquiries concerning either the examination or status of the application should be directed to the Technology Center.

The application is being forwarded to the Technology Center Art Unit 3644 for action on the merits commensurate with this decision.

Amelia Au
Petitions Examiner
Office of Petitions

UNITED STATES PATENT AND TRADEMARK OFFICE

Commissioner for Patents
United States Patent and Trademark Office
P.O. Box 1450
Alexandria, VA 22313-1450
www.uspto.gov

COPY MAILED

DEC 19 2006

OFFICE OF PETITIONS

KNOBBE MARTENS OLSON & BEAR LLP
2040 MAIN STREET
FOURTEENTH FLOOR
IRVINE CA 92614

In re Application of
Hemchandra M. Shertukde and Peter V. Beckman
Application No.11/417,952
Filed: May 3, 2006
Attorney Docket No. MEDSS.013A2
Title of Invention: Acoustic Sensor

DECISION GRANTING STATUS UNDER 37 CFR 1.47(A)

This is in response to the petition under 37 CFR 1.47(a) filed November 3, 2006.

The petition is GRANTED.

Petitioner has shown that non-signing inventor Shertukde has refused to join in the filing of the above-identified application after having been presented with the application papers. The petition attest a copy of the application was sent to non-signing inventor's last known address. Petitioner has provided evidence of non-signing inventor's express refusal to execute the application papers.

The above-identified application and papers have been reviewed and found in compliance with 37 CFR 1.47(a). This application is hereby accorded Rule 1.47(a) status.

As provided in Rule 1.47(c), this Office will forward notice of this application's filing to the non-signing inventor at the address given in the petition. Notice of the filing of this application will also be published in the Official Gazette.

After this decision is mailed, the application will be forwarded to the Office of Initial Patent Examination for further processing.

Telephone inquiries regarding this communication should be directed to the undersigned at (571) 272-3215.

Charlema R. Grant

Charlema R. Grant
Petitions Attorney
Office of Petitions

UNITED STATES PATENT AND TRADEMARK OFFICE

Commissioner for Patents
United States Patent and Trademark Office
P.O. Box 1450
Alexandria, VA 22313-1450
www.uspto.gov

Hemchandra Shertukde
11 Windham Drive
Simsbury, CT 06001

COPY MAILED
DEC 19 2006
OFFICE OF PETITIONS

In re Application of
Hemchandra M. Shertukde and Peter V. Beckman
Application No.11/417,952
Filed: May 3, 2006
Attorney Docket No. MEDSS.013A2
Title of Invention: Acoustic Sensor

: LETTER

Dear Mr. Shertukde :

You are named as a joint inventor in the above-identified United States patent application filed under the provisions of 35 U.S.C. 116 (United States Code) and 37 C.F.R. § 1.47(a), Rules of Practice in Patent Cases. Should a patent be granted on the application you will be designated therein as a joint inventor.

As a named inventor you are entitled to inspect any paper in the file wrapper of the application, order copies of all or any part thereof (at a prepaid cost as per 37 C.F.R. § 1.19) or make your position of record in the application. Alternatively, you may arrange to do any of the preceding through a registered patent attorney or agent presenting written authorization from you. If you care to join the application, applicant (see below) would presumably assist you. Joining in the application would entail the filing of an appropriate oath or declaration by you pursuant to 37 C.F.R. § 1.63.

Telephone inquiries regarding this communication should be directed to Petitions Attorney Charlema R. Grant at (571) 272-3215. Requests for information regarding your application should be directed to the File Information Unit at (703) 308-2733. Information regarding how to pay for and order a copy of the application, or a specific paper in the application, should be directed to Certification Division at (703) 308-9726 or 1-800-972-6382 (outside the Washington D.C. area).

Charlema R. Grant
Petitions Attorney
Office of Petitions

KNOBBE MARTENS OLSON & BEAR LLP
2040 MAIN STREET
FOURTEENTH FLOOR
IRVINE CA 92614
ATTN: PAUL CONOVER

UNITED STATES PATENT AND TRADEMARK OFFICE

UNITED STATES DEPARTMENT OF COMMERCE
United States Patent and Trademark Office
Address: COMMISSIONER FOR PATENTS
P.O. Box 1450
Alexandria, Virginia 22313-1450
www.uspto.gov

Trellis Intellectual Property Law Group, PC
1900 EMBARCADERO ROAD
SUITE 109
PALO ALTO, CA 94303

Mail Date: 06/24/2010

Applicant	: Weimin Ma	: DECISION ON REQUEST FOR
Patent Number	: 7640023	: RECALCULATION of PATENT
Issue Date	: 12/29/2009	: TERM ADJUSTMENT IN VIEW
Application No	: 11/417,960	: OF WYETH AND NOTICE OF INTENT TO
Filed	: 05/03/2006	: ISSUE CERTIFICATE OF CORRECTION
		:

The Request for Recalculation is **GRANTED** to the extent indicated.

The patent term adjustment has been determined to be **460** days. The USPTO will *sua sponte* issue a certificate of correction reflecting the amount of PTA days determined by the recalculation.

Prior to the issuance of the certificate of correction, the USPTO will afford patentee an opportunity to be heard and request reconsideration. Accordingly, patentee has **one month or thirty (30) days**, whichever is longer, to file a request for reconsideration of this patent term adjustment calculation. See 35 U.S.C. 154(b)(3)(B)(ii) and 37 CFR 1.322(a)(4). No extensions of time will be granted under 37 CFR 1.136.

Patentee should use document code PET.OP if electronically filing a request for reconsideration of this patent term adjustment calculation. The patentee must also include the information required by 37 CFR 1.705(b)(2) and the fee required by 37 CFR 1.18(e). If patentee does not file a timely request for reconsideration of this patent term adjustment calculation including the information required by 37 CFR 1.705(b)(2) and the fee required by 37 CFR 1.18(e), the USPTO will issue a certificate of correction reflecting the PTA determination noted above.

Patentee should be aware that in order to preserve the right to review in the United States District Court for the District of Columbia of the USPTO patent term adjustment determination, patentee must ensure that he or she also take the steps required under 35 U.S.C. 154(b)(4)(A) in a timely manner. Nothing in the request for recalculation should be construed as providing an alternative time frame for commencing a civil action under 35 U.S.C. 154(b)(4)(A).

Any questions concerning this decision should be directed to the Office of Patent Legal Administration at 571-272-7702.

SPE RESPONSE FOR CERTIFICATE OF CORRECTION

DATE : 2/27/08

Paper No.: —

TO SPE OF : ART UNIT 2625

SUBJECT : Request for Certificate of Correction for Appl. No.: 11/418006 Patent No: 7196811B2

A response is requested with respect to a request for a certificate of correction.

With respect to the change(s) requested to correct Office and/or Applicant's errors, should the patent read as shown in the certificate of correction attached herewith or the COCIN document(s), in IFW images for the above-identified patented application? No new matter should be introduced, nor should the scope or meaning of the claims be changed.

If the response is for an IFW, within 7 days, please complete and forward the response, to the employee (named below) via scanning into application images, using document code **COCX**.

If the response is for a paper file wrapper, please complete the response and forward the response with the paper file wrapper, to the employee (named below), within 7 days, to:

Certificates of Correction Branch (CofC)
South Tower - 9A22
Palm Location 7580

VIRGINIA TOLBERT
Certificates of Correction Branch
703-308-9390 ext. 113

Thank You For Your Assistance

The request for issuing the above-identified correction(s) is hereby:
Note your decision on the appropriate box.

- ☑ **Approved** — **All** changes apply.
- ☐ **Approved in Part** — Specify below which changes **do not** apply.
- ☐ **Denied** — State the reasons for denial below.

Comments: Corrections are approved as requested.

David Moore — **SPE**

2625 — **Art Unit**

SPE RESPONSE FOR CERTIFICATE OF CORRECTION

Paper No.:20080305

DATE : February 27, 2008

TO SPE OF : ART UNIT 2625

SUBJECT : Request for Certificate of Correction on Patent No.: 7196811B2

A response is requested with respect to the accompanying request for a certificate of correction.

Please complete this form and return with file, within **7** days to:
Certificates of Correction Branch - ST (South Tower) 9A22
Palm location **7590** - Tel. No. (703) 305-8309

With respect to the change(s) requested, correcting Office and/or Applicant's errors, should the patent read as shown in the certificate of correction? No new matter should be introduced, nor should the scope or meaning of the claims be changed.

Thank You For Your Assistance **Certificates of Correction Branch**

The request for issuing the above-identified correction(s) is hereby:

Note your decision on the appropriated box.

☒ **Approved** All changes apply.

☐ **Approved in Part** Specify below which changes **do not** apply.

☐ **Denied** State the reasons for denial below.

Comments:

Corrections are approved as requested.

SPE: /David Moore? Art Unit 2625

DATE 8/29/07

APPLICATION NUMBER 11 418 015

DOC CODE PETDEC

DOC DATE 8/30/07

DELIVER THE ATTACHED FIFLE/DOCUMENT TO THE TC SCANNING CENTER

CONTRACTOR: THE ATTACHED FILE/DOCUMENT MUST BE INDEXED AND SCANNED INTO IFW WITHIN **8** WORK HOURS; UPLOADING OF THE SCANNED IMAGES SHOULD OCCUR NO LATER THAN **16** WORK HOURS FOLLOWING RECEIPT OF THIS REQUEST

AFTER SCANNING, ORIGINAL DOCUMENTS SHOULD BE BOXED IN ACCORDANCE WITH INSTRUCTIONS

UNITED STATES PATENT AND TRADEMARK OFFICE

Commissioner for Patents
United States Patent and Trademark Office
P.O. Box 1450
Alexandria, VA 22313-1450
www.uspto.gov

COPY MAILED

AUG 30 2007

OFFICE OF PETITIONS

BARRY DOVE PATENT SERVICES, INC.
324 RAINTREE DRIVE
COPPELL TX 75019

In re Application of :

MATHEWS, Steve :
Application No. 11/418,015 :
Filed: May 4, 2006 :
Attorney Docket No. **SDM-001** :

DECISION ON PETITION
TO WITHDRAW
FROM RECORD

This is a decision on the Request to Withdraw as attorney or agent of record under 37 C.F.R. § 1.36(b), filed April 13, 2007.

The request is **NOT APPROVED.**

A grantable request to withdraw as attorney/agent of record must be signed by every attorney/agent seeking to withdraw or contain a clear indication that one attorney is signing on behalf of another/others. A request to withdraw will not be approved unless at least 30 (thirty) days would remain between the date of approval and the later of the expiration date of a time to file a response or the expiration date of the maximum time period which can be extended under 37 C.F.R. § 1.136(a).

The Office cannot approve the request at this time since the reasons provided do not meet any of the conditions under the mandatory or permissive categories enumerated in 37 CFR 10.40. Section 10.40 of Title 37 of the Code of Federal Regulation states, "[a] practitioner shall not withdraw from employment in a proceeding before the Office without permission from the Office[.]" More specifically, 37 CFR 10.40 states, "[i]f paragraph (b) of this section is not applicable, a practitioner may not request permission to withdraw in matter pending before the Office unless such request or such withdrawal is" for one the permissive reasons listed in 37 CFR 10.40(c). The reasons set forth in the request do not meet any of the conditions set forth in 37 CFR 10.40.

All future communications from the Office will continue to be directed to the above-listed address until otherwise notified by applicant.

Telephone inquiries concerning this decision should be directed to the undersigned at 571-272-7253.

Monica A. Graves
Petitions Examiner
Office of Petitions

cc: **STEVE MATHEWS**
20283 EMERALD AVENUE
PORT CHARLOTTE, FL 33952

UNITED STATES PATENT AND TRADEMARK OFFICE

UNITED STATES DEPARTMENT OF COMMERCE
United States Patent and Trademark Office
Address: COMMISSIONER FOR PATENTS
P.O. Box 1450
Alexandria, Virginia 22313-1450
www.uspto.gov

APPLICATION NO.	FILING DATE	FIRST NAMED INVENTOR	ATTORNEY DOCKET NO.	CONFIRMATION NO.
11/418,032	05/05/2006	Yong-Jun Yoo	50959	1016

7590 03/06/2009
ROYLANCE, ABRAMS, BERDO & GOODMAN, L.L.P.
1300 19TH STREET, N.W.
SUITE 600
WASHINGTON,, DC 20036

EXAMINER
TRAN, LY T

ART UNIT	PAPER NUMBER
2853	

MAIL DATE	DELIVERY MODE
03/06/2009	PAPER

DECISION DISMISSING PETITION UNDER 37 CFR 1.138(d)

The declaration of express abandonment will not be recognized

This is in response to the petition under 37 CFR 1.138(d), requesting for a refund of any previously paid search fee and excess claims fee in the above-identified application.

The petition is dismissed.

The express abandonment will **not** be recognized for the reason(s) indicated below:

1. ☒ The petition was not filed in sufficient time to permit the appropriate officials to recognize the abandonment before an examination has been made of the application. See 37 CFR 1.138(d).

2. ☐ The petition was not signed by a party authorized by 37 CFR 1.33(b)(1), (3) or (4).

3. ☐ The application is not an application filed under 35 U.S.C. 111(a) on or after December 8, 2004.

4. ☐ The petition for express abandonment under 1.138(d) is dismissed because the applicant did not pay any search fee and excess claims fees in the above-identified application.

Telephone inquiries should be directed to the Office of Data Management at (571) 272-4200.

Betty Powell

Patent Publication Branch
Office of Data Management

FORM PET651D (Rev. 08/07)

UNITED STATES PATENT AND TRADEMARK OFFICE

Commissioner for Patents
United States Patent and Trademark Office
P.O. Box 1450
Alexandria, VA 22313-1450
www.uspto.gov

RUDEN, MCCLOSKY, SMITH, SCHUSTER & RUSSELL, P.A.
200 EAST BROWARD BOULEVARD
SUITE 1500
FORT LAUDERDALE FL 33301

COPY MAILED

APR 2 4 2009

OFFICE OF PETITIONS

In re Application of	:	
WHITTLES, Daniel	:	
Application No. 11/418,049	:	DECISION ON PETITION
Filed: May 03, 2006	:	TO WITHDRAW
Attorney Docket No. **57139-0011**	:	FROM RECORD
	:	

This is a decision on the Request to Withdraw as attorney or agent of record under 37 C.F.R. § 1.36(b), filed February 17, 2009.

The request is **APPROVED**.

A grantable request to withdraw as attorney/agent of record must be signed by every attorney/agent seeking to withdraw or contain a clear indication that one attorney is signing on behalf of another/others. The Office requires the practitioner(s) requesting withdrawal to certify that he, she, or they have: (1) given reasonable notice to the client, prior to the expiration of the response period, that the practitioner(s) intends to withdraw from employment; (2) delivered to the client or a duly authorized representative of the client all papers and property (including funds) to which the client is entitled; and (3) notified the client of any responses that may be due and the time frame within which the client must respond, pursuant 37 CFR 10.40(c).

The request was signed by Stanley A. Kim on behalf of all attorneys of record who are associated with customer No. 43463. All attorneys/agents associated have been withdrawn. Applicant is reminded that there is no attorney of record at this time.

The request to change the correspondence address of record is not acceptable as the requested correspondence address is not that of: (1) the first named signing inventor; or (2) an intervening assignee of the entire interest under 37 C.F.R 3.71. All future communications from the Office will be directed to the first named signing inventor.

There is an outstanding Office action mailed February 25, 2009 that requires a reply from the applicant.

Telephone inquiries concerning this decision should be directed to Michelle R. Eason at 571-272-4231.

Michelle R. Eason
Paralegal Specialist
Office of Petitions

cc: **DANIEL WHITTLES**
3774 SW SUNSET TRACE CIRCLE
PALM CITY, FL 34990

cc: **PHASELOCD, INC.**
829 SOUTH PALMWAY
LAKE WORTH, FL 33460

UNITED STATES PATENT AND TRADEMARK OFFICE

UNITED STATES DEPARTMENT OF COMMERCE
United States Patent and Trademark Office
Address: COMMISSIONER FOR PATENTS
P.O. Box 1450
Alexandria, Virginia 22313-1450
www.uspto.gov

FOLEY AND LARDNER LLP
SUITE 500
3000 K STREET NW
WASHINGTON, DC 20007

Mail Date: 04/21/2010

Applicant	: Bernd Dorken	: DECISION ON REQUEST FOR
Patent Number	: 7575923	: RECALCULATION of PATENT
Issue Date	: 08/18/2009	: TERM ADJUSTMENT IN VIEW
Appliction No	: 11/418,058	: OF WYETH AND NOTICE OF INTENT TO
Filed	: 05/05/2006	: ISSUE CERTIFICATE OF CORRECTION
		:

The Request for Recalculation is **GRANTED** to the extent indicated.

The patent term adjustment has been determined to be **107** days. The USPTO will *sua sponte* issue a certificate of correction reflecting the amount of PTA days determined by the recalculation.

Prior to the issuance of the certificate of correction, the USPTO will afford patentee an opportunity to be heard and request reconsideration. Accordingly, patentee has **one month or thirty (30) days**, whichever is longer, to file a request for reconsideration of this patent term adjustment calculation. See 35 U.S.C. 154(b)(3)(B)(ii) and 37 CFR 1.322(a)(4). No extensions of time will be granted under 37 CFR 1.136.

Patentee should use document code PET.OP if electronically filing a request for reconsideration of this patent term adjustment calculation. The patentee must also include the information required by 37 CFR 1.705(b)(2) and the fee required by 37 CFR 1.18(e). If patentee does not file a timely request for reconsideration of this patent term adjustment calculation including the information required by 37 CFR 1.705(b)(2) and the fee required by 37 CFR 1.18(e), the USPTO will issue a certificate of correction reflecting the PTA determination noted above.

Patentee should be aware that in order to preserve the right to review in the United States District Court for the District of Columbia of the USPTO patent term adjustment determination, patentee must ensure that he or she also take the steps required under 35 U.S.C. 154(b)(4)(A) in a timely manner. Nothing in the request for recalculation should be construed as providing an alternative time frame for commencing a civil action under 35 U.S.C. 154(b)(4)(A).

Any questions concerning this decision should be directed to the Office of Patent Legal Administration at 571-272-7702.

UNITED STATES PATENT AND TRADEMARK OFFICE

Commissioner for Patents
United States Patent and Trademark Office
P.O. Box 1450
Alexandria, VA 22313-1450
www.uspto.gov

DAVIDSON BERQUIST JACKSON & GOWDEY LLP
4300 WILSON BLVD., 7TH FLOOR
ARLINGTON, VA 22203

MAILED

JUL 23 2010

OFFICE OF PETITIONS

In re Application of
Jonathan Gorrell, et al.
Application No.: 11/418,096
Filed: May 5, 2006
Attorney Docket No.: 2549-0064

ON PETITION

This is a decision on the petition, filed July 14, 2010, under 37 CFR 1.313(c)(2) to withdraw the above-identified application from issue after payment of the issue fee.

The petition is **GRANTED**.

The above-identified application is withdrawn from issue for consideration of a submission under 37 CFR 1.114 (request for continued examination). See 37 CFR 1.313(c)(2).

Petitioner is advised that the issue fee paid on June 3, 2010, cannot be refunded. If, however, this application is again allowed, petitioner may request that it be applied towards the issue fee required by the new Notice of Allowance.[1]

Telephone inquiries relating to this decision should be directed to the undersigned at (571) 272-3204.

The application is being referred to Technology Center AU 2821 for further processing of the request for continued examination under 37 CFR 1.114 and for consideration of the concurrently filed Information Disclosure Statement (IDS).

/SDB/

Sherry D. Brinkley
Petitions Examiner
Office of Petitions

[1] *The request to apply the issue fee to the new Notice may be satisfied by completing and returning the new Part B – Fee(s) Transmittal Form (along with any balance due at the time of submission). Petitioner is advised that the Issue Fee Transmittal Form must be completed and timely submitted to avoid abandonment of the application.*

UNITED STATES PATENT AND TRADEMARK OFFICE

Commissioner for Patents
United States Patent and Trademark Office
P.O. Box 1450
Alexandria, VA 22313-1450
www.uspto.gov

DAVIDSON BERQUIST JACKSON & GOWDEY LLP
4300 WILSON BLVD., 7TH FLOOR
ARLINGTON VA 22203

MAILED

MAY 24 2010

OFFICE OF PETITIONS

In re Application of
Gorrell
Application No. 11/418,100
Filed: May 5, 2006
Attorney Docket No. 2549-0071

DECISION ON PETITION

This is a decision on the petition under the unintentional provisions of 37 CFR 1.137(b), filed February 2, 2010, to revive the above-identified application.

The petition is **GRANTED**.

This application became abandoned for failure to timely submit the issue and publication fees, as required by the Notice of Allowance and Fee (s) Due, which was mailed October 30, 2009. The Notice of Allowance and Fee (s) Due and the Notice of Allowability set a three (3) month statutory period for reply. Extensions of time were not available under the provisions of 37 CFR 1.136(a). Accordingly, this application became abandoned on September 13, 2009. A Notice of Abandonment was mailed on October 1, 2009.

The petition satisfies the requirements of 37 CFR 1.137(b) in that petitioner has supplied (1) the reply in the form of payment of the $755 issue and publication fees of $300, (2) the petition fee of $810; and (3) a proper statement of unintentional delay.

Telephone inquiries concerning this decision should be directed to the undersigned at (571) 272-3215.

This application is being referred to the Office of Data Management for further processing.

Charlema Grant
Petitions Attorney
Office of Petitions

UNITED STATES PATENT AND TRADEMARK OFFICE

Commissioner for Patents
United States Patent and Trademark Office
P.O. Box 1450
Alexandria, VA 22313-1450
www.uspto.gov

FINNEGAN HENDERSON FARABOW GARRETT & DUNNER, LLP
901 NEW YORK AVENUE, NW
WASHINGTON, DC 20001-4413

COPY MAILED

OCT 27 2008

OFFICE OF PETITIONS

In re Application of	:	
KIKUCHI, et al.	:	
Application No. 11/418,103	:	DECISION GRANTING PETITION
Filed: May 5, 2006	:	UNDER 37 CFR 1.313(c)(2)
Attorney Docket No. 2887.0096-17	:	

This is a decision on the petition under 37 CFR 1.313(c)(2), filed October 24, 2008, to withdraw the above-identified application from issue after payment of the issue fee.

The petition is GRANTED.

The above-identified application is withdrawn from issue for consideration of a submission under 37 CFR 1.114 (request for continued examination). *See* 37 CFR 1.313(c)(2).

Petitioner is advised that the issue fee paid on September 17, 2008 cannot be refunded. If, however, this application is again allowed, petitioner may request that it be applied towards the issue fee required by the new Notice of Allowance.[1]

Telephone inquiries should be directed to the undersigned at (571) 272-7253.

This application is being referred to Technology Center AU 2112 for processing of the request for continued examination under 37 CFR 1.114 and for consideration of the concurrently filed information disclosure statement.

Monica A. Graves
Petitions Examiner
Office of Petitions

---

[1] *The request to apply the issue fee to the new Notice may be satisfied by completing and returning the new Part B – Fee(s) Transmittal Form (along with any balance due at the time of submission). Petitioner is advised that the Issue Fee Transmittal Form must be completed and timely submitted to avoid abandonment of the application.*

UNITED STATES PATENT AND TRADEMARK OFFICE

Commissioner for Patents
United States Patent and Trademark Office
P.O. Box 1450
Alexandria, VA 22313-1450
www.uspto.gov

EDELL, SHAPIRO & FINNAN, LLC
1901 RESEARCH BOULEVARD
SUITE 400
ROCKVILLE MD 20850

COPY MAILED

SEP 22 2008

OFFICE OF PETITIONS

In re Application of
Rezac, et al.
Application No. 11/418,107
Filed: May 5, 2006
Attorney Docket No. 0918.0301C

DECISION ON PETITION
UNDER 37 CFR 1.137(b)

This is a decision on the petition, filed July 18, 2008, which is being treated as a petition under 37 CFR 1.137(b) to revive the instant nonprovisional application for failure to timely notify the U.S. Patent and Trademark (USPTO) of the filing of an application in a foreign country, or under a multinational treaty that requires publication of applications eighteen months after filing. *See* 37 CFR 1.137(f).

The petition is **GRANTED**.

Petitioner states that the instant nonprovisional application is the subject of an application filed in an eighteen-month publication country on February 23, 2007. However, the USPTO was unintentionally not notified of this filing within 45 days subsequent to the filing of the subject application in an eighteen-month publication country.

In view of the above, this application became abandoned pursuant to 35 U.S.C. § 122(b)(2)(B)(iii) and 37 CFR 1.213(c) for failure to timely notify the Office of the filing of an application in a foreign country or under a multilateral international agreement that requires publication of applications 18 months after filing.

A petition to revive an application abandoned pursuant to 35 U.S.C. 122(b)(2)(B)(iii) for failure to notify the USPTO of a foreign filing must be accompanied by:

(1) the required reply which is met by the notification of such filing in a foreign country or under a multinational treaty;
(2) the petition fee as set forth in 37 CFR 1.17(m); and
(3) a statement that the entire delay in filing the required reply from the due date of the reply until the filing of a grantable petition was unintentional.

The instant petition has been found to be in compliance with 37 CFR 1.137(b). Accordingly, the failure to timely notify the USPTO of a foreign or international filing within 45 days after the date of filing of such foreign or international application as provided by 35 U.S.C. § 122(b)(2)(B)(iii) and 37 CFR 1.213(c) is accepted as having been unintentionally delayed.

The previous Request and Certification under 35 U.S.C. § 122(b)(2)(B)(i) has been rescinded.

This application is being forwarded to the Office of Patent Application Processing for issuance of a Notice Regarding Rescission of Nonpublication Request which will set forth the projected publication date.

Telephone inquiries concerning this decision should be directed to the undersigned at (571) 272-3205.

Alesia M. Brown
Petitions Attorney
Office of Petitions

UNITED STATES PATENT AND TRADEMARK OFFICE

UNITED STATES DEPARTMENT OF COMMERCE
United States Patent and Trademark Office
Address: COMMISSIONER FOR PATENTS
P.O. Box 1450
Alexandria, Virginia 22313-1450
www.uspto.gov

JACOBSON HOLMAN PLLC
400 SEVENTH STREET N.W.
SUITE 600
WASHINGTON, DC 20004

Mail Date: 04/21/2010

Applicant	: Guy Waugh	: DECISION ON REQUEST FOR
Patent Number	: 7652568	: RECALCULATION of PATENT
Issue Date	: 01/26/2010	: TERM ADJUSTMENT IN VIEW
Appliction No	: 11/418,109	: OF WYETH AND NOTICE OF INTENT TO
Filed	: 05/05/2006	: ISSUE CERTIFICATE OF CORRECTION
		:

The Request for Recalculation is **GRANTED** to the extent indicated.

The patent term adjustment has been determined to be **503** days. The USPTO will *sua sponte* issue a certificate of correction reflecting the amount of PTA days determined by the recalculation.

Prior to the issuance of the certificate of correction, the USPTO will afford patentee an opportunity to be heard and request reconsideration. Accordingly, patentee has **one month or thirty (30) days**, whichever is longer, to file a request for reconsideration of this patent term adjustment calculation. See 35 U.S.C. 154(b)(3)(B)(ii) and 37 CFR 1.322(a)(4). No extensions of time will be granted under 37 CFR 1.136.

Patentee should use document code PET.OP if electronically filing a request for reconsideration of this patent term adjustment calculation. The patentee must also include the information required by 37 CFR 1.705(b)(2) and the fee required by 37 CFR 1.18(e). If patentee does not file a timely request for reconsideration of this patent term adjustment calculation including the information required by 37 CFR 1.705(b)(2) and the fee required by 37 CFR 1.18(e), the USPTO will issue a certificate of correction reflecting the PTA determination noted above.

Patentee should be aware that in order to preserve the right to review in the United States District Court for the District of Columbia of the USPTO patent term adjustment determination, patentee must ensure that he or she also take the steps required under 35 U.S.C. 154(b)(4)(A) in a timely manner. Nothing in the request for recalculation should be construed as providing an alternative time frame for commencing a civil action under 35 U.S.C. 154(b)(4)(A).

Any questions concerning this decision should be directed to the Office of Patent Legal Administration at 571-272-7702.

UNITED STATES PATENT AND TRADEMARK OFFICE

Commissioner for Patents
United States Patent and Trademark Office
P.O. Box 1450
Alexandria, VA 22313-1450
www.uspto.gov

OGILVY RENAULT LLP
1981 MCGILL COLLEGE AVENUE
SUITE 1600
MONTREAL QC H3A2Y-3 CA CANADA

COPY MAILED
SEP 1 1 2006
OFFICE OF PETITIONS

In re Application of :
Idsinga, et al. : DECISION ON PETITION
Application No. 11/418,120 :
Filed: May 5, 2006 :
Atty. Dkt. No.: 17819-1US CMB/tf :
:

This decision is in response to the petition filed July 6, 2006 to accord the above-identified application a filing date of May 5, 2006.

The petition is **GRANTED**.

The application was filed on May 5, 2006. However, on June 2, 2006, the Office of Initial Patent Examination (OIPE) mailed a "Notice" indicating that the application had been accorded a filing date, but that Figure 8 appeared to have been omitted from the application papers as filed.

In response, petitioners argue that the application as filed included eight sheets of drawings and have included as proof of submission and proof of receipt of the figure in question, a return postcard receipt acknowledging receipt of eight sheets of drawings on May 5, 2006.

As Figure 8 previously submitted has not been located, the copy submitted herewith will be used for examination purposes.

A refund of the previously submitted petition fee of $400.00 has been requested from the Finance Office on petitioners' behalf.

This application is being forwarded to OIPE for further processing with a filing date of May 5, 2006.

Telephone inquiries regarding this decision should be directed to the undersigned at (571) 272-3205.

Alesia M. Brown
Petitions Attorney
Office of Petitions

UNITED STATES PATENT AND TRADEMARK OFFICE

UNITED STATES DEPARTMENT OF COMMERCE
United States Patent and Trademark Office
Address: COMMISSIONER FOR PATENTS
P.O. Box 1450
Alexandria, Virginia 22313-1450
www.uspto.gov

SUGHRUE MION, PLLC
2100 PENNSYLVANIA AVENUE, N.W.
SUITE 800
WASHINGTON, DC 20037

Mail Date: 04/20/2010

Applicant	: Jae-phil Koo	: DECISION ON REQUEST FOR
Patent Number	: 7587120	: RECALCULATION of PATENT
Issue Date	: 09/08/2009	: TERM ADJUSTMENT IN VIEW
Appliction No	: 11/418,122	: OF WYETH AND NOTICE OF INTENT TO
Filed	: 05/05/2006	: ISSUE CERTIFICATE OF CORRECTION
		:

The Request for Recalculation is **GRANTED** to the extent indicated.

The patent term adjustment has been determined to be **118** days. The USPTO will *sua sponte* issue a certificate of correction reflecting the amount of PTA days determined by the recalculation.

Prior to the issuance of the certificate of correction, the USPTO will afford patentee an opportunity to be heard and request reconsideration. Accordingly, patentee has **one month or thirty (30) days**, whichever is longer, to file a request for reconsideration of this patent term adjustment calculation. See 35 U.S.C. 154(b)(3)(B)(ii) and 37 CFR 1.322(a)(4). No extensions of time will be granted under 37 CFR 1.136.

Patentee should use document code PET.OP if electronically filing a request for reconsideration of this patent term adjustment calculation. The patentee must also include the information required by 37 CFR 1.705(b)(2) and the fee required by 37 CFR 1.18(e). If patentee does not file a timely request for reconsideration of this patent term adjustment calculation including the information required by 37 CFR 1.705(b)(2) and the fee required by 37 CFR 1.18(e), the USPTO will issue a certificate of correction reflecting the PTA determination noted above.

Patentee should be aware that in order to preserve the right to review in the United States District Court for the District of Columbia of the USPTO patent term adjustment determination, patentee must ensure that he or she also take the steps required under 35 U.S.C. 154(b)(4)(A) in a timely manner. Nothing in the request for recalculation should be construed as providing an alternative time frame for commencing a civil action under 35 U.S.C. 154(b)(4)(A).

Any questions concerning this decision should be directed to the Office of Patent Legal Administration at 571-272-7702.

SPE RESPONSE FOR CERTIFICATE OF CORRECTION

Paper No.:

DATE :

TO SPE OF : ART UNIT

SUBJECT : Request for Certificate of Correction on Patent No.:

A response is requested with respect to the accompanying request for a certificate of correction.

Please complete this form and return with file, within **7** days to:
Certificates of Correction Branch - ST (South Tower) 9A22
Palm location **7590** - Tel. No. (703) 305-8309

With respect to the change(s) requested, correcting Office and/or Applicant's errors, should the patent read as shown in the certificate of correction? No new matter should be introduced, nor should the scope or meaning of the claims be changed.

Thank You For Your Assistance **Certificates of Correction Branch**

The request for issuing the above-identified correction(s) is hereby:

Note your decision on the appropriated box.

☐ **Approved** All changes apply.

☐ **Approved in Part** Specify below which changes **do not** apply.

☐ **Denied** State the reasons for denial below.

Comments:

UNITED STATES PATENT AND TRADEMARK OFFICE

UNITED STATES DEPARTMENT OF COMMERCE
United States Patent and Trademark Office
Address: COMMISSIONER FOR PATENTS
P.O. Box 1450
Alexandria, Virginia 22313-1450
www.uspto.gov

PERKINS COIE LLP
PATENT-SEA
PO BOX 1247
SEATTLE, WA 98111-1247

Mail Date: 04/20/2010

Applicant	: Kyle K. Kirby	: DECISION ON REQUEST FOR
Patent Number	: 7589008	: RECALCULATION of PATENT
Issue Date	: 09/15/2009	: TERM ADJUSTMENT IN VIEW
Appliction No	: 11/418,170	: OF WYETH AND NOTICE OF INTENT TO
Filed	: 05/04/2006	: ISSUE CERTIFICATE OF CORRECTION
		:

The Request for Recalculation is **GRANTED** to the extent indicated.

The patent term adjustment has been determined to be **259** days. The USPTO will *sua sponte* issue a certificate of correction reflecting the amount of PTA days determined by the recalculation.

Prior to the issuance of the certificate of correction, the USPTO will afford patentee an opportunity to be heard and request reconsideration. Accordingly, patentee has **one month or thirty (30) days**, whichever is longer, to file a request for reconsideration of this patent term adjustment calculation. See 35 U.S.C. 154(b)(3)(B)(ii) and 37 CFR 1.322(a)(4). No extensions of time will be granted under 37 CFR 1.136.

Patentee should use document code PET.OP if electronically filing a request for reconsideration of this patent term adjustment calculation. The patentee must also include the information required by 37 CFR 1.705(b)(2) and the fee required by 37 CFR 1.18(e). If patentee does not file a timely request for reconsideration of this patent term adjustment calculation including the information required by 37 CFR 1.705(b)(2) and the fee required by 37 CFR 1.18(e), the USPTO will issue a certificate of correction reflecting the PTA determination noted above.

Patentee should be aware that in order to preserve the right to review in the United States District Court for the District of Columbia of the USPTO patent term adjustment determination, patentee must ensure that he or she also take the steps required under 35 U.S.C. 154(b)(4)(A) in a timely manner. Nothing in the request for recalculation should be construed as providing an alternative time frame for commencing a civil action under 35 U.S.C. 154(b)(4)(A).

Any questions concerning this decision should be directed to the Office of Patent Legal Administration at 571-272-7702.

UNITED STATES PATENT AND TRADEMARK OFFICE

Commissioner for Patents
United States Patent and Trademark Office
P.O. Box 1450
Alexandria, VA 22313-1450
www.uspto.gov

Ward & Olivo
708 Third Avenue
New York NY 10017

COPY MAILED

AUG 2 0 2007

OFFICE OF PETITIONS

In re Application of
Kim, et al.
Application No. 11/418,171
Filed: May 4, 2006
Attorney Docket No. 140-095A
For: ION GUIDE FOR MASS SPECTROMETERS

ON PETITION

This is a decision on the petition under 37 CFR 1.137(b), filed April 9, 2007 (certificate of mailing date April 5, 2007), to revive the above-identified application.

The petition under 37 CFR 1.137(b) is **GRANTED**.

This application became abandoned for failure to timely reply to the Notice to File Corrected Application Papers, mailed June 6, 2006, which set a two month shortened statutory period for reply. No extensions of time having been obtained pursuant to 37 CFR 1.136(a) and no reply being received in the Office, this application became abandoned on August 7, 2006. A Notice of Abandonment was mailed on February 7, 2007.

Applicants have submitted a proper reply to the June 6, 2006 Notice in the form of a substitute specification, an acceptable statement of the unintentional nature of the delay in responding to the June 6, 2006 Notice, and the $1,500.00 petition fee. Accordingly, the petition under 37 CFR 1.137(b) is granted.

After the mailing of this decision, the file will be returned to the Office of Initial Patent Examination for further processing.

Telephone inquiries concerning this matter may be directed to the undersigned at (571) 272-3230.

Shirene Willis Brantley
Senior Petitions Attorney
Office of Petitions

UNITED STATES PATENT AND TRADEMARK OFFICE

UNITED STATES DEPARTMENT OF COMMERCE
United States Patent and Trademark Office
Address: COMMISSIONER FOR PATENTS
P.O. Box 1450
Alexandria, Virginia 22313-1450
www.uspto.gov

STAAS & HALSEY LLP
SUITE 700
1201 NEW YORK AVENUE, N.W.
WASHINGTON, DC 20005

Mail Date: 08/02/2010

Applicant	: Jeong-yeon Park	: DECISION ON REQUEST FOR
Patent Number	: 7654639	: RECALCULATION of PATENT
Issue Date	: 02/02/2010	: TERM ADJUSTMENT IN VIEW
Application No	: 11/418,184	: OF WYETH AND NOTICE OF INTENT TO
Filed	: 05/05/2006	: ISSUE CERTIFICATE OF CORRECTION
		:

The Request for Recalculation is **GRANTED** to the extent indicated.

The patent term adjustment has been determined to be **789** days. The USPTO will *sua sponte* issue a certificate of correction reflecting the amount of PTA days determined by the recalculation.

Prior to the issuance of the certificate of correction, the USPTO will afford patentee an opportunity to be heard and request reconsideration. Accordingly, patentee has **one month or thirty (30) days**, whichever is longer, to file a request for reconsideration of this patent term adjustment calculation. See 35 U.S.C. 154(b)(3)(B)(ii) and 37 CFR 1.322(a)(4). No extensions of time will be granted under 37 CFR 1.136.

Patentee should use document code PET.OP if electronically filing a request for reconsideration of this patent term adjustment calculation. The patentee must also include the information required by 37 CFR 1.705(b)(2) and the fee required by 37 CFR 1.18(e). If patentee does not file a timely request for reconsideration of this patent term adjustment calculation including the information required by 37 CFR 1.705(b)(2) and the fee required by 37 CFR 1.18(e), the USPTO will issue a certificate of correction reflecting the PTA determination noted above.

Patentee should be aware that in order to preserve the right to review in the United States District Court for the District of Columbia of the USPTO patent term adjustment determination, patentee must ensure that he or she also take the steps required under 35 U.S.C. 154(b)(4)(A) in a timely manner. Nothing in the request for recalculation should be construed as providing an alternative time frame for commencing a civil action under 35 U.S.C. 154(b)(4)(A).

Any questions concerning this decision should be directed to the Office of Patent Legal Administration at 571-272-7702.

UNITED STATES PATENT AND TRADEMARK OFFICE

Commissioner for Patents
United States Patent and Trademark Office
P.O. Box 1450
Alexandria, VA 22313-1450
www.uspto.gov

ROYLANCE, ABRAMS, BERDO & GOODMAN, L.L.P.
1300 19TH STREET, N.W.
SUITE 600
WASHINGTON, DC 20036

COPY MAILED
AUG 0 7 2006
OFFICE OF PETITIONS

In re Application of
Wolfgang Wagner et al.
Application No. 11/418,201
Filed: May 5, 2006
Attorney Docket No. 51479

: DECISION ON PETITION

This is a decision on the petition filed June 6, 2006 in response to the Notice of Omitted Items mailed June 2, 2006, which is treated under 37 CFR 1.182.

On May 5, 2006, the application was filed. On June 2, 2006, the Office of Initial Patent Examination mailed a Notice of Omitted Items stating that the application had been accorded a filing date of May 5, 2006, but that Figure 3 described in the specification appeared to have been omitted.

In response, the instant petition and a sheet containing Figure 3 was filed. Petitioners assert that three sheets containing Figures 1-3 were filed with the other application papers on May 5, 2006. In support, a copy of petitioners' postcard receipt has been supplied. The postcard receipt shows an Office date stamp of May 5, 2006, and identifies the application by the name of the inventor and the title of the invention, and acknowledges receipt, *inter alia*, of three sheets of drawings. Petitioners request that the application be considered complete with Figure 3 as of the date of filing, May 5, 2006.

A review of the record reveals that only two (2) sheets of drawings are located among the application papers deposited on May 5, 2006 and there is no page of drawings containing Figure 3. However, from the evidence presented it is obvious that there should have been three sheets of drawings and that Figure 3 would have been on Sheet 3 of 3. Since the postcard receipt lacks any notation of non-receipt of any item listed, the application, including the one (1) sheet of drawings containing Figure 3 as described in the specification, is entitled to a filing date of May 5, 2006.

The "Notice" mailed on June 2, 2006, is **VACATED**.

In view of the above, the petition is **GRANTED**. The $400.00 petition fee paid on June 6, 2006, will be refunded to deposit account 18-2220.

This matter is being referred to the Office of Initial Patent Examination for further processing with a filing date of May 5, 2006, using the application papers filed on May 5, 2006 and the drawings supplied on June 6, 2006 with the petition.

Telephone inquiries regarding this decision should be directed to the undersigned Petitions Attorney at (571) 272-3212.

Patricia Faison-Ball

Patricia Faison-Ball
Senior Petitions Attorney
Office of Petitions

UNITED STATES PATENT AND TRADEMARK OFFICE

UNITED STATES DEPARTMENT OF COMMERCE
United States Patent and Trademark Office
Address: COMMISSIONER FOR PATENTS
P.O. Box 1450
Alexandria, Virginia 22313-1450
www.uspto.gov

APPLICATION NO.	FILING DATE	FIRST NAMED INVENTOR	ATTORNEY DOCKET NO.	CONFIRMATION NO.
11/418,230	05/04/2006	Kazufumi Kobashi	10014341US01	1651

34904 7590 10/01/2009
CANON U.S.A. INC. INTELLECTUAL PROPERTY DIVISION
15975 ALTON PARKWAY
IRVINE, CA 92618-3731

EXAMINER
QUELER, ADAM M

ART UNIT	PAPER NUMBER
2178	

NOTIFICATION DATE	DELIVERY MODE
10/01/2009	ELECTRONIC

Please find below and/or attached an Office communication concerning this application or proceeding.

The time period for reply, if any, is set in the attached communication.

Notice of the Office communication was sent electronically on above-indicated "Notification Date" to the following e-mail address(es):

sivon.kalminov@cda.canon.com
marlene.klein@cda.canon.com
IPDocketing@cda.canon.com

UNITED STATES PATENT AND TRADEMARK OFFICE

Commissioner for Patents
United States Patent and Trademark Office
P.O. Box 1450
Alexandria, VA 22313-1450
www.uspto.gov

CANON U.S.A. INC. INTELLECTUAL PROPERTY DIVISION
15975 ALTON PARKWAY
IRVINE, CA 92618-3731

In re Application of: KOBASHI
Application No. 11/418,230
Filed: May 04, 2006
Atty. Docket No.: 10014341US01
For: LAYOUT PROCESSING METHOD, LAYOUT PROCESSING APPARATUS, AND LAYOUT PROCESSING PROGRAM

DECISION ON REQUEST TO PARTICIPATE IN PATENT PROSECUTION HIGHWAY PILOT PROGRAM AND PETITION TO MAKE SPECIAL UNDER 37 CFR 1.102(d)

This is a decision on the renewed request to participate in the Patent Prosecution Highway (PPH) program and the petition under 37 CFR 1.102(d), filed July 23, 2009, to make the above-identified application special.

The petition is **GRANTED.**

A grantable request to participate in the PPH program and petition to make special require:

(1) The U.S. application is
(a) a Paris Convention application which either
(i) validly claims priority under 35 U.S.C. 119(a) and 37 CFR 1.55 to one or more applications filed in the JPO, or
(ii) validly claims priority to a PCT application that contains no priority claims,

Or

(b) a national stage application under the PCT (an application which entered the national stage in the U.S. from a PCT international application after compliance with 35 U.S.C. 371), which PCT application
(i) validly claims priority to an application filed in the JPO, or
(ii) validly claims priority to a PCT application that contains no priority claims, or
(iii) contains no priority claim,

Or

(c) a so-called bypass application filed under 35 U.S.C. 111 (a) which validly claims benefit under 35 U.S.C. 120 to a PCT application, which PCT application
(i) validly claims priority to an application filed in the JPO, or

(ii) validly claims priority to a PCT application that contains no priority claims, or
(iii) contains no priority claim.

Where the JPO application that contains the allowable/patentable claims is not the same application for which priority is claimed in the U.S. application, applicant must identify the relationship between the JPO application that contains the allowable/patentable claims and the JPO priority application claimed in the U.S. application.

(2) Applicant must submit a copy of:
a. The allowable/patentable claim(s) from the JPO application(s) or if a copy of the allowable/patentable claims is available via the Dossier Access System (DAS) applicant may request the USPTO obtain a copy from the DAS, however if the USPTO is unable to obtain a copy from the DAS the applicant will be required to submit a copy;
b. An English translation of the allowable/patentable claim(s) and
c. A statement that the English translation is accurate;

(3) Applicant must:
a. Ensure all the claims in the U.S. application must sufficiently correspond or be amended to sufficiently correspond to the allowable/patentable claim(s) in the JPO application(s) and
b. Submit a claims correspondence table in English;

(4) Examination of the U.S. application has not begun;

(5) Applicant must submit:
a. Documentation of prior office action:
i. a copy of the office action(s)just prior to the "Decision to Grant a Patent" from each of the JPO application(s) containing the allowable/patentable claim(s) or
ii. if the allowable/patentable claims(s) are from a "Notification of Reasons for Refusal" then the Notification of Reasons for Refusal or
iii. if the JPO application is a first action allowance then no office action from the JPO is necessary should be indicated on the request/petition form;

Further, if a copy of the documents from a or b above is available via the Dossier Access System (DAS) applicant may request the USPTO obtain a copy from the DAS, however if the USPTO is unable to obtain a copy from the DAS the applicant will be required to submit a copy; b. An English language translation of the JPO Office action from (5)(a)(i)-(ii) above c. A statement that the English translation is accurate;

(6) Applicant must submit:
a. An IDS listing the documents cited by the JPO examiner in the JPO office action (unless already submitted in this application)
b. Copies of the documents except U.S. patents or U.S. patent application publications (unless already submitted in this application);

(7) The required petition fee under 37 CFR 1.17(h).

The request to participate in the PPH pilot program and petition are found to comply with the above requirements. Accordingly, the above-identified application has been accorded "special" status.

Telephone inquiries concerning this decision should be directed to Mano Padmanabhan at 571-272-4210.

All other inquiries concerning the examination or status of the application is accessible in the PAIR system at http://www.uspto.gov/ebc/index.html.

The application is being forwarded to the examiner for action on the merits commensurate with this decision.

/Mano Padmanabhan/

Mano Padmanabhan
Quality Assurance Specialist, Technology Center 2100, Workgroup 2180
571-272-4210

UNITED STATES PATENT AND TRADEMARK OFFICE

Commissioner for Patents
United States Patent and Trademark Office
P.O. Box 1450
Alexandria, VA 22313-1450
www.uspto.gov

AGILENT TECHNOLOGIES INC.
INTELLECTUAL PROPERTY ADMINISTRATION,LEGAL DEPT.
MS BLDG. E P.O. BOX 7599
LOVELAND, CO 80537

COPY MAILED
DEC 11 2008

In re Application of	:	
Hans-Georg Weissgerber	:	
Application No. 11/418,231	:	ON PETITION
Filed: May 4, 2006	:	
Attorney Docket No. 20031527-02	:	

This is a decision on the petition under 37 CFR 1.137(b), filed September 15, 2008, to revive the above-identified application.

The petition is **GRANTED**.

The application became abandoned for failure to timely file a reply within the meaning of 37 CFR 1.113 to the final Office action of October 12, 2007. A Notice of Abandonment was mailed on May 13, 2008. On September 15, 2008, the present petition was filed.

There is no indication that the person signing the instant petition was ever given a power of attorney or authorization of agent to prosecute the above-identified application. However, in accordance with 37 CFR 1.34(a), the signature of Mr. James E. Cole appearing on the petition shall constitute a representation to the United States Patent and Trademark Office that petitioner is authorized to represent the particular party on whose behalf he acts. While a courtesy copy of this decision is being mailed to petitioner, all future correspondence will be directed solely to the address of record. If Mr. Cole desires to receive future correspondence regarding this application, the appropriate power of attorney and change of correspondence address documents must be submitted.

The petition satisfies the requirements of 37 CFR 1.137(b) in that petitioner has supplied (1) the reply in the form of a Request for Continued Examination (RCE), including the fee of $810 and the submission required by 37 CFR 1.114; (2) the petition fee of $1540; and (3) an adequate statement of unintentional delay[1].

[1] 37 CFR 1.137(b)(3) requires a statement that the entire delay in filing the required reply from the due date for the reply until the filing of a grantable petition pursuant to 37 CFR 1.137(b) was unintentional. While the statement is not made by an attorney of record, such statement is being treated as having been made as the result of a reasonable inquiry into the facts and circumstances of such delay. See 37 CFR 10.18(b) and Changes to Patent Practice and Procedure; Final Rule Notice, 62 Fed. Reg. 53131, 53178 (October 10, 1997), 1203 Off. Gaz. Pat. Office 63, 103 (October 21, 1997). In the event that such an inquiry has not been made, petitioner must make such an inquiry. If such inquiry results in the discovery that it is not correct that the entire delay in filing the required reply from the due date for the reply until the filing of a grantable petition pursuant to 37 CFR 1.137(b) was unintentional, petitioner must notify the Office.

The application is being referred to Technology Center AU 2855 for processing of the RCE and for appropriate action by the Examiner in the normal course of business on the amendment submitted in accordance with 37 CFR 1.114.

Telephone inquiries concerning this decision should be directed to the undersigned at (571) 272-3204. Inquiries relating to further prosecution should be directed to the Technology Center.

Sherry D. Brinkley
Petitions Examiner
Office of Petitions

cc: JOSEPH V. GAMBERDELL, JR.
PERMAN & GREEN, LLP
425 POST ROAD
FAIRFIELD, CT 06824

UNITED STATES PATENT AND TRADEMARK OFFICE

Commissioner for Patents
United States Patent and Trademark Office
P.O. Box 1450
Alexandria, VA 22313-1450
www.uspto.gov

CAESAR, RIVISE, BERNSTEIN,
COHEN & POKOTILOW, LTD.
11TH FLOOR, SEVEN PENN CENTER
1635 MARKET STREET
PHILADELPHIA PA 19103-2212

COPY MAILED
JUN 11 2008
OFFICE OF PETITIONS

In re Application of	:	
Genaro Martinez et al	:	
Application No. 11/418,242	:	DECISION ON PETITION
Filed: May 5, 2006	:	UNDER 37 CFR 1.137(b)
Attorney Docket No. T1142/20065	:	

This is a decision on the petition, filed September 18, 2007, which is being treated as a petition under 37 CFR 1.137(b) to revive the instant nonprovisional application for failure to timely notify the U.S. Patent and Trademark (USPTO) of the filing of an application in a foreign country, or under a multinational treaty that requires publication of applications eighteen months after filing. *See* 37 CFR 1.137(f).

The petition is **GRANTED**.

Petitioner states that the instant nonprovisional application is the subject of an application filed in an eighteen-month publication country on May 7, 2007. However, the USPTO was unintentionally not notified of this filing within 45 days subsequent to the filing of the subject application in an eighteen-month publication country.

In view of the above, this application became abandoned pursuant to 35 U.S.C. § 122(b)(2)(B)(iii) and 37 CFR 1.213(c) for failure to timely notify the Office of the filing of an application in a foreign country or under a multilateral international agreement that requires publication of applications 18 months after filing.

A petition to revive an application abandoned pursuant to 35 U.S.C. 122(b)(2)(B)(iii) for failure to notify the USPTO of a foreign filing must be accompanied by:

(1) the required reply which is met by the notification of such filing in a foreign country or under a multinational treaty;
(2) the petition fee as set forth in 37 CFR 1.17(m); and
(3) a statement that the entire delay in filing the required reply from the due date of the reply until the filing of a grantable petition was unintentional.

The instant petition has been found to be in compliance with 37 CFR 1.137(b). Accordingly, the failure to timely notify the USPTO of a foreign or international filing within 45 days after the date of filing of such foreign or international application as provided by 35 U.S.C. § 122(b)(2)(B)(iii) and 37 CFR 1.213(c) is accepted as having been unintentionally delayed.

The previous Request and Certification under 35 U.S.C. § 122(b)(2)(B)(i) has been rescinded.

Telephone inquiries concerning this decision should be directed to the undersigned at (571) 272-3208.

This application is being referred to Technology Center Art Unit 2612 for examination in due course.

Karen Creasy

Karen Creasy
Petitions Examiner
Office of Petitions

UNITED STATES PATENT AND TRADEMARK OFFICE

UNITED STATES DEPARTMENT OF COMMERCE
United States Patent and Trademark Office
Address: COMMISSIONER FOR PATENTS
P.O. Box 1450
Alexandria, Virginia 22313-1450
www.uspto.gov

STAAS & HALSEY LLP
SUITE 700
1201 NEW YORK AVENUE, N.W.
WASHINGTON, DC 20005

Mail Date: 04/21/2010

Applicant	: Jung-gee Baek	: DECISION ON REQUEST FOR
Patent Number	: 7577395	: RECALCULATION of PATENT
Issue Date	: 08/18/2009	: TERM ADJUSTMENT IN VIEW
Appliction No	: 11/418,259	: OF WYETH AND NOTICE OF INTENT TO
Filed	: 05/05/2006	: ISSUE CERTIFICATE OF CORRECTION
		:

The Request for Recalculation is **GRANTED** to the extent indicated.

The patent term adjustment has been determined to be **0** days. The USPTO will *sua sponte* issue a certificate of correction reflecting the amount of PTA days determined by the recalculation.

Prior to the issuance of the certificate of correction, the USPTO will afford patentee an opportunity to be heard and request reconsideration. Accordingly, patentee has **one month or thirty (30) days**, whichever is longer, to file a request for reconsideration of this patent term adjustment calculation. See 35 U.S.C. 154(b)(3)(B)(ii) and 37 CFR 1.322(a)(4). No extensions of time will be granted under 37 CFR 1.136.

Patentee should use document code PET.OP if electronically filing a request for reconsideration of this patent term adjustment calculation. The patentee must also include the information required by 37 CFR 1.705(b)(2) and the fee required by 37 CFR 1.18(e). If patentee does not file a timely request for reconsideration of this patent term adjustment calculation including the information required by 37 CFR 1.705(b)(2) and the fee required by 37 CFR 1.18(e), the USPTO will issue a certificate of correction reflecting the PTA determination noted above.

Patentee should be aware that in order to preserve the right to review in the United States District Court for the District of Columbia of the USPTO patent term adjustment determination, patentee must ensure that he or she also take the steps required under 35 U.S.C. 154(b)(4)(A) in a timely manner. Nothing in the request for recalculation should be construed as providing an alternative time frame for commencing a civil action under 35 U.S.C. 154(b)(4)(A).

Any questions concerning this decision should be directed to the Office of Patent Legal Administration at 571-272-7702.

UNITED STATES PATENT AND TRADEMARK OFFICE

Commissioner for Patents
United States Patent and Trademark Office
P.O. Box 1450
Alexandria, VA 22313-1450
www.uspto.gov

KNOBBE MARTENS OLSON & BEAR LLP
2040 MAIN STREET
FOURTEENTH FLOOR
IRVINE, CA 92614

COPY MAILED

OCT 2 6 2007

OFFICE OF PETITIONS

In re Application of	:
Nathalie Schlienger	: DECISION ON PETITIONS
Application No. 11/418,322	:
Filed: May 3, 2006	:
Attorney Docket No. ACADIA.019DV2	:

This is a decision on the petition, filed October 25, 2007 and resubmitted on October 26, 2007, under 37 CFR 1.313(c)(2) to withdraw the above-identified application from issue after payment of the issue fee. This is also a decision on the petition filed October 25, 2007 and resubmitted on October 26, 2007, under 37 CFR §§ 1.78(a)(3), to accept an unintentionally delayed claim under 35 U.S.C. §120 of the prior-filed application set forth in the concurrently filed amendment.

The petitions are **Granted**.

As to the petitoin under 37 CFR 1.313(c)(2):

The above-identified application is withdrawn from issue for consideration of a submission under 37 CFR 1.114 (request for continued examination). See 37 CFR 1.313(c)(2).

Petitioner is advised that the issue fee paid on September 17, 2007 in the above-identified application cannot be refunded. If, however, the above-identified application is again allowed, petitioner may request that it be applied towards the issue fee required by the new Notice of Allowance.[1]

---

[1] The request to apply the issue fee to the new Notice may be satisfied by completing and returning the new Issue Fee Transmittal Form PTOL-85(b), which includes the following language thereon: "Commissioner for Patents is requested to apply the Issue Fee and Publication Fee (if any) or re-apply any previously paid issue fee to the application identified above." Petitioner is advised that, whether a fee is indicated as being due or not, the Issue Fee Transmittal Form **must** be completed and timely submitted to avoid abandonment. Note the language in bold text on the first page of the Notice of Allowance and Fee(s) Due (PTOL-85).

A petition for acceptance of a claim for late priority under 37 CFR § 1.78(a)(3) is only applicable to those applications filed on or after November 29, 2000. Further, the petition is appropriate only after the expiration of the period specified in 37 CFR § 1.78(a)(2)(ii). In addition, the petition under 37 CFR § 1.78(a)(3) must be accompanied by:

(1) the reference required by 35 U.S.C. § 120 and 37 CFR § 1.78(a)(2)(i) of the prior-filed application, unless previously submitted;

(2) the surcharge set forth in § 1.17(t); and

(3) a statement that the entire delay between the date the claim was due under 37 CFR § 1.78(a)(2)(ii) and the date the claim was filed was unintentional. The Commissioner may require additional where there is a question whether the delay was unintentional.

The instant nonprovisional application was filed after November 29, 2000, and the claim herein for the benefit of priority to the prior-filed application is submitted after expiration of the period specified in 37 CFR § 1.78(a)(2)(ii). Therefore, this is a proper petition under 37 CFR § 1.78(a)(3).

The petition complies with the requirements for a grantable petition under 37 CFR §1.78(a)(3) in that (1) a reference to the above-noted, prior-filed application has been included in an amendment to the first sentence of the specification following the title, as provided by 37 CFR § 1.78(a)(2)(iii); (2) the surcharge fee required by 37 CFR 1.17(t) has been submitted; and (3) the petition contains a proper statement of unintentional delay. Accordingly, having found that the instant petition for acceptance of an unintentionally delayed claim for the benefit of priority under 35 U.S.C. § 120 to the above-noted, prior-filed application satisfies the conditions of 37 CFR § 1.78(a)(3), the petition is granted.

The granting of the petition to accept the delayed benefit claim to the prior-filed application under 37 CFR § 1.78(a)(3) should <u>not</u> be construed as meaning that the instant application is entitled to the benefit of the filing date of the prior-filed application. In order for the instant application to be entitled to the benefit of the prior-filed application, all other requirements under 35 U.S.C. §120 1.78(a)(1) and (a)(2) must be met. Similarly, the fact that the corrected Filing Receipt accompanying this decision on petition includes the prior-filed application should <u>not</u> be construed as meaning that applicant is entitled to the claim for benefit of priority to the prior-filed application noted thereon. Accordingly, the examiner will, in due course, consider this benefit claim and determine whether the instant application is entitled to the benefit of the earlier filing date.

A corrected Filing Receipt, which includes the priority claim to the prior-filed applications, accompanies this decision on petition.

Any questions concerning this matter may be directed to the undersigned at (571) 272-3208. All other inquiries concerning either the examination procedures or status of the application should be directed to the Technology Center.

This application is being forwarded to Technology Center Art Unit 1624 for appropriate action on the amendment submitted October 26, 2007, including consideration by the examiner of the claim under 35 U.S.C. § 120 and 37 CFR 1.78(a)(2) for the benefit of prior-filed Application No. 11/154,083.

Karen Creasy

Karen Creasy
Petitions Examiner
Office of Petitions

ATTACHMENT : Corrected Filing Receipt

UNITED STATES PATENT AND TRADEMARK OFFICE

UNITED STATES DEPARTMENT OF COMMERCE
United States Patent and Trademark Office
Address: COMMISSIONER FOR PATENTS
P.O. Box 1450
Alexandria, Virginia 22313-1450
www.uspto.gov

APPLICATION NUMBER	FILING or 371(c) DATE	GRP ART UNIT	FIL FEE REC'D	ATTY.DOCKET.NO	TOT CLAIMS	IND CLAIMS
11/418,322	05/03/2006	1624	1800	ACADIA.019DV2	19	1

CONFIRMATION NO. 9752

CORRECTED FILING RECEIPT

20995
KNOBBE MARTENS OLSON & BEAR LLP
2040 MAIN STREET
FOURTEENTH FLOOR
IRVINE, CA 92614

OC000000026490574

Date Mailed: 10/29/2007

Receipt is acknowledged of this non-provisional patent application. The application will be taken up for examination in due course. Applicant will be notified as to the results of the examination. Any correspondence concerning the application must include the following identification information: the U.S. APPLICATION NUMBER, FILING DATE, NAME OF APPLICANT, and TITLE OF INVENTION. Fees transmitted by check or draft are subject to collection. Please verify the accuracy of the data presented on this receipt. **If an error is noted on this Filing Receipt, please write to the Office of Initial Patent Examination's Filing Receipt Corrections. Please provide a copy of this Filing Receipt with the changes noted thereon. If you received a "Notice to File Missing Parts" for this application, please submit any corrections to this Filing Receipt with your reply to the Notice. When the USPTO processes the reply to the Notice, the USPTO will generate another Filing Receipt incorporating the requested corrections**

Applicant(s)

Nathalie Schlienger, Frederiksberg, DENMARK;

Power of Attorney: The patent practitioners associated with Customer Number 20995

Domestic Priority data as claimed by applicant

This application is a CON of 11/154,083 06/16/2005 PAT 7,217,719
which is a DIV of 10/329,719 12/23/2002 PAT 6,911,452
which claims benefit of 60/344,750 12/28/2001

Foreign Applications

If Required, Foreign Filing License Granted: 06/01/2006

The country code and number of your priority application, to be used for filing abroad under the Paris Convention, is **US 11/418,322**

Projected Publication Date: Not Applicable

Non-Publication Request: No

Early Publication Request: No
**** SMALL ENTITY ****

Title

SPIROAZACYCLIC COMPOUNDS AS MONOAMINE RECEPTOR MODULATORS

Preliminary Class

514

PROTECTING YOUR INVENTION OUTSIDE THE UNITED STATES

Since the rights granted by a U.S. patent extend only throughout the territory of the United States and have no effect in a foreign country, an inventor who wishes patent protection in another country must apply for a patent in a specific country or in regional patent offices. Applicants may wish to consider the filing of an international application under the Patent Cooperation Treaty (PCT). An international (PCT) application generally has the same effect as a regular national patent application in each PCT-member country. The PCT process **simplifies** the filing of patent applications on the same invention in member countries, but **does not result** in a grant of "an international patent" and does not eliminate the need of applicants to file additional documents and fees in countries where patent protection is desired.

Almost every country has its own patent law, and a person desiring a patent in a particular country must make an application for patent in that country in accordance with its particular laws. Since the laws of many countries differ in various respects from the patent law of the United States, applicants are advised to seek guidance from specific foreign countries to ensure that patent rights are not lost prematurely.

Applicants also are advised that in the case of inventions made in the United States, the Director of the USPTO must issue a license before applicants can apply for a patent in a foreign country. The filing of a U.S. patent application serves as a request for a foreign filing license. The application's filing receipt contains further information and guidance as to the status of applicant's license for foreign filing.

Applicants may wish to consult the USPTO booklet, "General Information Concerning Patents" (specifically, the section entitled "Treaties and Foreign Patents") for more information on timeframes and deadlines for filing foreign patent applications. The guide is available either by contacting the USPTO Contact Center at 800-786-9199, or it can be viewed on the USPTO website at http://www.uspto.gov/web/offices/pac/doc/general/index.html.

For information on preventing theft of your intellectual property (patents, trademarks and copyrights), you may wish to consult the U.S. Government website, http://www.stopfakes.gov. Part of a Department of Commerce initiative, this website includes self-help "toolkits" giving innovators guidance on how to protect intellectual property in specific countries such as China, Korea and Mexico. For questions regarding patent enforcement issues, applicants may call the U.S. Government hotline at 1-866-999-HALT (1-866-999-4158).

LICENSE FOR FOREIGN FILING UNDER

Title 35, United States Code, Section 184

Title 37, Code of Federal Regulations, 5.11 & 5.15

GRANTED

The applicant has been granted a license under 35 U.S.C. 184, if the phrase "IF REQUIRED, FOREIGN FILING LICENSE GRANTED" followed by a date appears on this form. Such licenses are issued in all applications where the conditions for issuance of a license have been met, regardless of whether or not a license may be required as

set forth in 37 CFR 5.15. The scope and limitations of this license are set forth in 37 CFR 5.15(a) unless an earlier license has been issued under 37 CFR 5.15(b). The license is subject to revocation upon written notification. The date indicated is the effective date of the license, unless an earlier license of similar scope has been granted under 37 CFR 5.13 or 5.14.

This license is to be retained by the licensee and may be used at any time on or after the effective date thereof unless it is revoked. This license is automatically transferred to any related applications(s) filed under 37 CFR 1.53(d). This license is not retroactive.

The grant of a license does not in any way lessen the responsibility of a licensee for the security of the subject matter as imposed by any Government contract or the provisions of existing laws relating to espionage and the national security or the export of technical data. Licensees should apprise themselves of current regulations especially with respect to certain countries, of other agencies, particularly the Office of Defense Trade Controls, Department of State (with respect to Arms, Munitions and Implements of War (22 CFR 121-128)); the Bureau of Industry and Security, Department of Commerce (15 CFR parts 730-774); the Office of Foreign AssetsControl, Department of Treasury (31 CFR Parts 500+) and the Department of Energy.

NOT GRANTED

No license under 35 U.S.C. 184 has been granted at this time, if the phrase "IF REQUIRED, FOREIGN FILING LICENSE GRANTED" DOES NOT appear on this form. Applicant may still petition for a license under 37 CFR 5.12, if a license is desired before the expiration of 6 months from the filing date of the application. If 6 months has lapsed from the filing date of this application and the licensee has not received any indication of a secrecy order under 35 U.S.C. 181, the licensee may foreign file the application pursuant to 37 CFR 5.15(b).

UNITED STATES PATENT AND TRADEMARK OFFICE

Commissioner for Patents
United States Patent and Trademark Office
P.O. Box 1450
Alexandria, VA 22313-1450
www.uspto.gov

KNOBBE MARTENS OLSON & BEAR LLP
2040 MAIN STREET
FOURTEENTH FLOOR
IRVINE CA 92614

COPY MAILED

OCT 2 6 2007

OFFICE OF PETITIONS

In re Application of	:	
Nathalie Schlienger	:	
Application No. 11/418,322	:	DECISION GRANTING PETITION
Filed: May 3, 2006	:	UNDER 37 CFR 1.313(c)(2)
Attorney Docket No. ACADIA.019DV2	:	

This is a decision on the petition under 37 CFR 1.313(c)(2), filed October 25, 2007, to withdraw the above-identified application from issue after payment of the issue fee.

The petition is **GRANTED**.

The above-identified application is withdrawn from issue for consideration of a submission under 37 CFR 1.114 (request for continued examination). *See* 37 CFR 1.313(c)(2).

Petitioner is advised that the issue fee paid on September 17, 2007 cannot be refunded. If, however, this application is again allowed, petitioner may request that it be applied towards the issue fee required by the new Notice of Allowance.[1]

Telephone inquiries should be directed to the undersigned at (571) 272-3208.

This application is being referred to Technology Center AU 1624 for processing of the request for continued examination under 37 CFR 1.114 and for consideration of the concurrently filed IDS.

Karen Creasy

Karen Creasy
Petitions Examiner
Office of Petitions

---

[1] *The request to apply the issue fee to the new Notice may be satisfied by completing and returning the new Part B – Fee(s) Transmittal Form (along with any balance due at the time of submission). Petitioner is advised that the Issue Fee Transmittal Form* ***must*** *be completed and timely submitted to avoid abandonment of the application.*

UNITED STATES PATENT AND TRADEMARK OFFICE

UNITED STATES DEPARTMENT OF COMMERCE
United States Patent and Trademark Office
Address: COMMISSIONER FOR PATENTS
P.O. Box 1450
Alexandria, Virginia 22313-1450
www.uspto.gov

BRACEWELL & GIULIANI LLP
P.O. BOX 61389
HOUSTON, TX 77208-1389

Mail Date: 04/20/2010

Applicant	: Philip P. Truax	: DECISION ON REQUEST FOR
Patent Number	: 7617670	: RECALCULATION of PATENT
Issue Date	: 11/17/2009	: TERM ADJUSTMENT IN VIEW
Appliction No	: 11/418,336	: OF WYETH AND NOTICE OF INTENT TO
Filed	: 05/04/2006	: ISSUE CERTIFICATE OF CORRECTION
		:

The Request for Recalculation is **GRANTED** to the extent indicated.

The patent term adjustment has been determined to be **576** days. The USPTO will *sua sponte* issue a certificate of correction reflecting the amount of PTA days determined by the recalculation.

Prior to the issuance of the certificate of correction, the USPTO will afford patentee an opportunity to be heard and request reconsideration. Accordingly, patentee has **one month or thirty (30) days**, whichever is longer, to file a request for reconsideration of this patent term adjustment calculation. See 35 U.S.C. 154(b)(3)(B)(ii) and 37 CFR 1.322(a)(4). No extensions of time will be granted under 37 CFR 1.136.

Patentee should use document code PET.OP if electronically filing a request for reconsideration of this patent term adjustment calculation. The patentee must also include the information required by 37 CFR 1.705(b)(2) and the fee required by 37 CFR 1.18(e). If patentee does not file a timely request for reconsideration of this patent term adjustment calculation including the information required by 37 CFR 1.705(b)(2) and the fee required by 37 CFR 1.18(e), the USPTO will issue a certificate of correction reflecting the PTA determination noted above.

Patentee should be aware that in order to preserve the right to review in the United States District Court for the District of Columbia of the USPTO patent term adjustment determination, patentee must ensure that he or she also take the steps required under 35 U.S.C. 154(b)(4)(A) in a timely manner. Nothing in the request for recalculation should be construed as providing an alternative time frame for commencing a civil action under 35 U.S.C. 154(b)(4)(A).

Any questions concerning this decision should be directed to the Office of Patent Legal Administration at 571-272-7702.

UNITED STATES PATENT AND TRADEMARK OFFICE

UNITED STATES DEPARTMENT OF COMMERCE
United States Patent and Trademark Office
Address: COMMISSIONER FOR PATENTS
P.O. Box 1450
Alexandria, Virginia 22313-1450
www.uspto.gov

BRACEWELL & GIULIANI LLP
P.O. BOX 61389
HOUSTON, TX 77208-1389

Mail Date: 05/17/2010

Applicant : Philip P. Truax
Patent Number : 7617670
Issue Date : 11/17/2009
Application No : 11/418,336
Filed : 05/04/2006

: NOTICE CONCERNING IMPROPER
: CALCULATION OF PATENT TERM
: ADJUSTMENT BASED UPON USPTO
: IMPROPERLY MEASURING REDUCTION
: PERIOD UNDER 37 CFR 1.704(c)(10).

The United States Patent and Trademark Office (USPTO) discovered that in processing the recent recalculation decisions mailed in response to patentee's filed Request for Recalculation of Patent Term Adjustment in view of Wyeth, the USPTO improperly measured the reduction period for reductions under 37 CFR 1.704(c)(10). Pursuant to 37 CFR 1.704(c)(10), patentee's reduction begins on the date of filing the amendment under 37 CFR 1.312 ("1.312 amendment") or other related paper and ends on the date that the Office mails a response to the filing of the 1.312 amendment or other paper. It has been discovered that during the recalculation, the calculation failed to the limit the reduction to the mail date of the response to the 1.312 amendment or other paper. Accordingly, patentee's reductions were greater than warranted.

This notice **VACATES** the previous GRANTED request for recalculation and provides patentee with a revised GRANTED recalculation.

The patent term adjustment has been determined to be **607** days. The USPTO will *sua sponte* issue a certificate of correction reflecting the amount of patent term adjustment (PTA) days determined by the recalculation.

Prior to the issuance of the certificate of correction, the USPTO will afford patentee an opportunity to be heard and request reconsideration. Accordingly, patentee has **one month or thirty (30) days** from the mail date of this notice, whichever is longer, to file a request for reconsideration of this PTA calculation. See 35 U.S.C. § 154(b)(3)(B)(ii) and 37 CFR 1.322(a)(4).

Patentee should use document code PET.OP if electronically filing a request for reconsideration of this PTA calculation. The patentee must also include the information required by 37 CFR 1.705(b)(2), and the fee required by 37 CFR 1.18(e). If patentee does not file a timely request for reconsideration of this PTA calculation, including the information required by 37 CFR 1.705(b)(2) and the fee required by 37 CFR 1.18(e), the USPTO will issue a certificate of correction reflecting the PTA determination noted above.

Patentee should be aware that in order to preserve the right of review of the USPTO's PTA determination in the United States District Court for the District of Columbia, patentee must ensure that the steps required under 35 U.S.C. § 154 (b)(4) are taken in a timely manner. Nothing in the request for recalculation should be construed as providing an alternative time frame for commencing a civil action under 35 U.S.C. § 154(b)(4).

UNITED STATES PATENT AND TRADEMARK OFFICE

UNITED STATES DEPARTMENT OF COMMERCE
United States Patent and Trademark Office
Address: COMMISSIONER FOR PATENTS
P.O. Box 1450
Alexandria, Virginia 22313-1450
www.uspto.gov

Meyertons, Hood, Kivlin, Kowert, Goetzel/Symantec
P.O. Box 398
Austin, TX 78767-0398

Mail Date: 04/20/2010

Applicant	: Qin Xin	: DECISION ON REQUEST FOR
Patent Number	: 7580956	: RECALCULATION of PATENT
Issue Date	: 08/25/2009	: TERM ADJUSTMENT IN VIEW
Appliction No	: 11/418,358	: OF WYETH AND NOTICE OF INTENT TO
Filed	: 05/04/2006	: ISSUE CERTIFICATE OF CORRECTION
		:

The Request for Recalculation is **GRANTED** to the extent indicated.

The patent term adjustment has been determined to be **309** days. The USPTO will *sua sponte* issue a certificate of correction reflecting the amount of PTA days determined by the recalculation.

Prior to the issuance of the certificate of correction, the USPTO will afford patentee an opportunity to be heard and request reconsideration. Accordingly, patentee has **one month or thirty (30) days**, whichever is longer, to file a request for reconsideration of this patent term adjustment calculation. See 35 U.S.C. 154(b)(3)(B)(ii) and 37 CFR 1.322(a)(4). No extensions of time will be granted under 37 CFR 1.136.

Patentee should use document code PET.OP if electronically filing a request for reconsideration of this patent term adjustment calculation. The patentee must also include the information required by 37 CFR 1.705(b)(2) and the fee required by 37 CFR 1.18(e). If patentee does not file a timely request for reconsideration of this patent term adjustment calculation including the information required by 37 CFR 1.705(b)(2) and the fee required by 37 CFR 1.18(e), the USPTO will issue a certificate of correction reflecting the PTA determination noted above.

Patentee should be aware that in order to preserve the right to review in the United States District Court for the District of Columbia of the USPTO patent term adjustment determination, patentee must ensure that he or she also take the steps required under 35 U.S.C. 154(b)(4)(A) in a timely manner. Nothing in the request for recalculation should be construed as providing an alternative time frame for commencing a civil action under 35 U.S.C. 154(b)(4)(A).

Any questions concerning this decision should be directed to the Office of Patent Legal Administration at 571-272-7702.

UNITED STATES PATENT AND TRADEMARK OFFICE

Commissioner for Patents
United States Patent and Trademark Office
P.O. Box 1450
Alexandria, VA 22313-1450
www.uspto.gov

Paper No.

COPY MAILED

MAR 28 2008

OFFICE OF PETITIONS

GUERIN & RODRIGUEZ, LLP
5 MT. ROYAL AVE.
MARLBORO MA 01752

In re Application of Joseph L. Brigham, Jr., et al. Application No. 11/418,363 Filed: May 4, 2006 Attorney Docket No.: EMC-055 (EMC-06-152) Title: MATING FOR SINGLE CONNECTOR ATTACHMENT (SCA) DISK CONNECTORS	DECISION ON PETITION PURSUANT TO 37 C.F.R. § 1.137(B)

This is a decision on the petition pursuant to 37 C.F.R. § 1.137(b)[1], filed February 4, 2008, to revive the above-identified application.

This petition pursuant to 37 C.F.R. § 1.137(b) is **GRANTED**.

This application became abandoned for failure to reply within the meaning of 37 C.F.R § 1.113 in a timely manner to the final Office action mailed July 16, 2007, which set a shortened statutory period for reply of three months. No extensions of time under the provisions of 37 C.F.R § 1.136(a) were obtained, and no response was received. Accordingly, this application

---

1 A grantable petition pursuant to 37 C.F.R § 1.137(b) must be accompanied by:

(1) The reply required to the outstanding Office action or notice, unless previously filed;
(2) The petition fee as set forth in 37 C.F.R § 1.17(m);
(3) A statement that the entire delay in filing the required reply from the due date for the reply until the filing of a grantable petition pursuant to this paragraph was unintentional. The Commissioner may require additional information where there is a question whether the delay was unintentional, and;
(4) Any terminal disclaimer (and fee as set forth in 37 C.F.R § 1.20(d)) required pursuant to paragraph (d) of this section.

became abandoned on October 17, 2007. A notice of abandonment was mailed subsequent to this filing of this petition on February 5, 2008.

With this petition, Petitioner has submitted the petition fee, the proper statement of unintentional delay, and a notice of appeal along with the associated fee. A terminal disclaimer is not required.

As such, the first three requirements of Rule 1.137(b) have been met. The fourth requirement is not applicable.

The Notice of Appeal filed on February 4, 2008 has been entered and made of record. Accordingly, **the two-month period for filing the Appeal Brief, in triplicate, accompanied by the fee required by law, runs from the mailing date of this decision.**

The Technology Center will be notified of this decision. The Technology Center's support staff will notify the Examiner of this decision, so that the application can receive further processing.

Telephone inquiries regarding *this decision* should be directed to the undersigned at (571) 272-3225[2]. All other inquiries concerning examination procedures or status of the application should be directed to the Technology Center.

/Paul Shanoski/
Paul Shanoski
Senior Attorney
Office of Petitions

---

2 Petitioner will note that all practice before the Office should be in writing, and the action of the Office will be based exclusively on the written record in the Office. See 37 C.F.R. § 1.2. As such, Petitioner is reminded that no telephone discussion may be controlling or considered authority for Petitioner's further action(s).

UNITED STATES PATENT AND TRADEMARK OFFICE

UNITED STATES DEPARTMENT OF COMMERCE
United States Patent and Trademark Office
Address: COMMISSIONER FOR PATENTS
P.O. Box 1450
Alexandria, Virginia 22313-1450
www.uspto.gov

APPLICATION NO.	FILING DATE	FIRST NAMED INVENTOR	ATTORNEY DOCKET NO.	CONFIRMATION NO.
11/418,372	05/05/2006	Jeong-Hoon Kim	50686	1533

7590 10/07/2008
ROYLANCE, ABRAMS, BERDO & GOODMAN, L.L.P.
1300 19TH STREET, N.W.
SUITE 600
WASHINGTON,, DC 20036

EXAMINER
DASTOURI, MEHRDAD

ART UNIT	PAPER NUMBER
2621	

MAIL DATE	DELIVERY MODE
10/07/2008	PAPER

DECISION GRANTING PETITION UNDER 37 CFR 1.138(d)

The declaration of express abandonment is recognized

This is in response to the petition under 37 CFR 1.138(d), requesting for a refund of any previously paid search fee and excess claims fee in the above-identified application.

The petition is granted.

The express abandonment is recognized. Any previously paid search fee and excess claims fee are hereby refunded.

Telephone inquiries should be directed to the Office of Data Management at (571) 272-4200.

Nioni Farmer

Patent Publication Branch
Office of Data Management

Refund Ref:
10/07/2008 NFARMER 0000164684

CHECK Refund Total: $500.00

Adjustment date: 10/07/2008 NFARMER
05/09/2006 WASFAW1 00000057 11418372
02 FC:1111 -500.00 OP

FORM PET651G (Rev. 08/07)

UNITED STATES PATENT AND TRADEMARK OFFICE

UNITED STATES DEPARTMENT OF COMMERCE
United States Patent and Trademark Office
Address: COMMISSIONER FOR PATENTS
P.O. Box 1450
Alexandria, Virginia 22313-1450
www.uspto.gov

KNOBBE MARTENS OLSON & BEAR LLP
2040 MAIN STREET
FOURTEENTH FLOOR
IRVINE, CA 92614

Mail Date: 07/02/2010

Applicant	: Greg Benson	: DECISION ON REQUEST FOR
Patent Number	: 7656286	: RECALCULATION of PATENT
Issue Date	: 02/02/2010	: TERM ADJUSTMENT IN VIEW
Application No	: 11/418,380	: OF WYETH AND NOTICE OF INTENT TO
Filed	: 05/03/2006	: ISSUE CERTIFICATE OF CORRECTION
		:

The Request for Recalculation is **GRANTED** to the extent indicated.

The patent term adjustment has been determined to be **788** days. The USPTO will *sua sponte* issue a certificate of correction reflecting the amount of PTA days determined by the recalculation.

Prior to the issuance of the certificate of correction, the USPTO will afford patentee an opportunity to be heard and request reconsideration. Accordingly, patentee has **one month or thirty (30) days**, whichever is longer, to file a request for reconsideration of this patent term adjustment calculation. See 35 U.S.C. 154(b)(3)(B)(ii) and 37 CFR 1.322(a)(4). No extensions of time will be granted under 37 CFR 1.136.

Patentee should use document code PET.OP if electronically filing a request for reconsideration of this patent term adjustment calculation. The patentee must also include the information required by 37 CFR 1.705(b)(2) and the fee required by 37 CFR 1.18(e). If patentee does not file a timely request for reconsideration of this patent term adjustment calculation including the information required by 37 CFR 1.705(b)(2) and the fee required by 37 CFR 1.18(e), the USPTO will issue a certificate of correction reflecting the PTA determination noted above.

Patentee should be aware that in order to preserve the right to review in the United States District Court for the District of Columbia of the USPTO patent term adjustment determination, patentee must ensure that he or she also take the steps required under 35 U.S.C. 154(b)(4)(A) in a timely manner. Nothing in the request for recalculation should be construed as providing an alternative time frame for commencing a civil action under 35 U.S.C. 154(b)(4)(A).

Any questions concerning this decision should be directed to the Office of Patent Legal Administration at 571-272-7702.

UNITED STATES PATENT AND TRADEMARK OFFICE

UNITED STATES DEPARTMENT OF COMMERCE
United States Patent and Trademark Office
Address: COMMISSIONER FOR PATENTS
P.O. Box 1450
Alexandria, Virginia 22313-1450
www.uspto.gov

KNOBBE MARTENS OLSON & BEAR LLP
2040 MAIN STREET
FOURTEENTH FLOOR
IRVINE, CA 92614

Mail Date: 04/20/2010

Applicant	: Greg Benson	: DECISION ON REQUEST FOR
Patent Number	: 7609159	: RECALCULATION of PATENT
Issue Date	: 10/27/2009	: TERM ADJUSTMENT IN VIEW
Appliction No	: 11/418,381	: OF WYETH AND NOTICE OF INTENT TO
Filed	: 05/03/2006	: ISSUE CERTIFICATE OF CORRECTION
		:

The Request for Recalculation is **GRANTED** to the extent indicated.

The patent term adjustment has been determined to be **147** days. The USPTO will *sua sponte* issue a certificate of correction reflecting the amount of PTA days determined by the recalculation.

Prior to the issuance of the certificate of correction, the USPTO will afford patentee an opportunity to be heard and request reconsideration. Accordingly, patentee has **one month or thirty (30) days**, whichever is longer, to file a request for reconsideration of this patent term adjustment calculation. See 35 U.S.C. 154(b)(3)(B)(ii) and 37 CFR 1.322(a)(4). No extensions of time will be granted under 37 CFR 1.136.

Patentee should use document code PET.OP if electronically filing a request for reconsideration of this patent term adjustment calculation. The patentee must also include the information required by 37 CFR 1.705(b)(2) and the fee required by 37 CFR 1.18(e). If patentee does not file a timely request for reconsideration of this patent term adjustment calculation including the information required by 37 CFR 1.705(b)(2) and the fee required by 37 CFR 1.18(e), the USPTO will issue a certificate of correction reflecting the PTA determination noted above.

Patentee should be aware that in order to preserve the right to review in the United States District Court for the District of Columbia of the USPTO patent term adjustment determination, patentee must ensure that he or she also take the steps required under 35 U.S.C. 154(b)(4)(A) in a timely manner. Nothing in the request for recalculation should be construed as providing an alternative time frame for commencing a civil action under 35 U.S.C. 154(b)(4)(A).

Any questions concerning this decision should be directed to the Office of Patent Legal Administration at 571-272-7702.

UNITED STATES PATENT AND TRADEMARK OFFICE

UNITED STATES DEPARTMENT OF COMMERCE
United States Patent and Trademark Office
Address: COMMISSIONER FOR PATENTS
P.O. Box 1450
Alexandria, Virginia 22313-1450
www.uspto.gov

KNOBBE MARTENS OLSON & BEAR LLP
2040 MAIN STREET
FOURTEENTH FLOOR
IRVINE, CA 92614

Mail Date: 07/30/2010

Applicant	: Emmanuelle Lauber	: DECISION ON REQUEST FOR
Patent Number	: 7663024	: RECALCULATION of PATENT
Issue Date	: 02/16/2010	: TERM ADJUSTMENT IN VIEW
Application No	: 11/418,384	: OF WYETH AND NOTICE OF INTENT TO
Filed	: 05/03/2006	: ISSUE CERTIFICATE OF CORRECTION
		:

The Request for Recalculation is **GRANTED** to the extent indicated.

The patent term adjustment has been determined to be **584** days. The USPTO will *sua sponte* issue a certificate of correction reflecting the amount of PTA days determined by the recalculation.

Prior to the issuance of the certificate of correction, the USPTO will afford patentee an opportunity to be heard and request reconsideration. Accordingly, patentee has **one month or thirty (30) days**, whichever is longer, to file a request for reconsideration of this patent term adjustment calculation. See 35 U.S.C. 154(b)(3)(B)(ii) and 37 CFR 1.322(a)(4). No extensions of time will be granted under 37 CFR 1.136.

Patentee should use document code PET.OP if electronically filing a request for reconsideration of this patent term adjustment calculation. The patentee must also include the information required by 37 CFR 1.705(b)(2) and the fee required by 37 CFR 1.18(e). If patentee does not file a timely request for reconsideration of this patent term adjustment calculation including the information required by 37 CFR 1.705(b)(2) and the fee required by 37 CFR 1.18(e), the USPTO will issue a certificate of correction reflecting the PTA determination noted above.

Patentee should be aware that in order to preserve the right to review in the United States District Court for the District of Columbia of the USPTO patent term adjustment determination, patentee must ensure that he or she also take the steps required under 35 U.S.C. 154(b)(4)(A) in a timely manner. Nothing in the request for recalculation should be construed as providing an alternative time frame for commencing a civil action under 35 U.S.C. 154(b)(4)(A).

Any questions concerning this decision should be directed to the Office of Patent Legal Administration at 571-272-7702.

UNITED STATES PATENT AND TRADEMARK OFFICE

Commissioner for Patents
United States Patent and Trademark Office
P.O. Box 1450
Alexandria, VA 22313-1450
www.uspto.gov

COPY MAILED

JUN 14 2007

OFFICE OF PETITIONS

KNOBBE MARTENS OLSON & BEAR, LLP
2040 MAIN STREET
FOURTEENTH FLOOR
IRVINE, CA 92614

In re Application of Thomas A. Silvestrini Application No. 11/418,390 Filed: May 3, 2006 Attorney Docket No. ACUFO.004C5	: : : : :	ON PETITION

This is a decision on the petition under 37 CFR 1.137(b), filed February 27, 2007, to revive the above-identified application.

The application became abandoned for failure to respond to the Notice to File Missing Parts of Non-Provisional Application mailed June 5, 2006. Accordingly, a Notice of Abandonment was mailed on February 7, 2007.

The petition satisfies the requirements of 37 CFR 1.137(b), in that, petitioner has supplied (1) the reply in the form of an executed oath/declaration with the $65 surcharge, $125 for the utility application size fee, $100 for the examination fee, $250 for the search fee, and $150 for the basic filing fee; (2) the petition fee of $750; and (3) an adequate statement of unintentional delay. Therefore, the petition is **GRANTED**.

The application file is being referred to the Office of Initial Patent Examination for further processing.

Telephone inquiries concerning this decision should be directed to the undersigned at (571) 272-3226.

Andrea Smith
Petitions Examiner
Office of Petitions

UNITED STATES PATENT AND TRADEMARK OFFICE

UNITED STATES DEPARTMENT OF COMMERCE
United States Patent and Trademark Office
Address: COMMISSIONER FOR PATENTS
P.O. Box 1450
Alexandria, Virginia 22313-1450
www.uspto.gov

REISING, ETHINGTON, BARNES, KISSELLE, P.C.
P.O. BOX 4390
TROY, MI 48099-4390

Mail Date: 04/21/2010

Applicant	: Leonora M. Brozell	: DECISION ON REQUEST FOR
Patent Number	: 7648038	: RECALCULATION of PATENT
Issue Date	: 01/19/2010	: TERM ADJUSTMENT IN VIEW
Appliction No	: 11/418,435	: OF WYETH AND NOTICE OF INTENT TO
Filed	: 05/04/2006	: ISSUE CERTIFICATE OF CORRECTION
		:

The Request for Recalculation is **GRANTED** to the extent indicated.

The patent term adjustment has been determined to be **631** days. The USPTO will *sua sponte* issue a certificate of correction reflecting the amount of PTA days determined by the recalculation.

Prior to the issuance of the certificate of correction, the USPTO will afford patentee an opportunity to be heard and request reconsideration. Accordingly, patentee has **one month or thirty (30) days**, whichever is longer, to file a request for reconsideration of this patent term adjustment calculation. See 35 U.S.C. 154(b)(3)(B)(ii) and 37 CFR 1.322(a)(4). No extensions of time will be granted under 37 CFR 1.136.

Patentee should use document code PET.OP if electronically filing a request for reconsideration of this patent term adjustment calculation. The patentee must also include the information required by 37 CFR 1.705(b)(2) and the fee required by 37 CFR 1.18(e). If patentee does not file a timely request for reconsideration of this patent term adjustment calculation including the information required by 37 CFR 1.705(b)(2) and the fee required by 37 CFR 1.18(e), the USPTO will issue a certificate of correction reflecting the PTA determination noted above.

Patentee should be aware that in order to preserve the right to review in the United States District Court for the District of Columbia of the USPTO patent term adjustment determination, patentee must ensure that he or she also take the steps required under 35 U.S.C. 154(b)(4)(A) in a timely manner. Nothing in the request for recalculation should be construed as providing an alternative time frame for commencing a civil action under 35 U.S.C. 154(b)(4)(A).

Any questions concerning this decision should be directed to the Office of Patent Legal Administration at 571-272-7702.

UNITED STATES PATENT AND TRADEMARK OFFICE

Commissioner for Patents
United States Patent and Trademark Office
P.O. Box 1450
Alexandria, VA 22313-1450
www.uspto.gov

KNOBBE MARTENS OLSON & BEAR LLP
2040 MAIN STREET
FOURTEENTH FLOOR
IRVINE CA 92614

COPY MAILED
DEC 21 2006
OFFICE OF PETITIONS

In re Application of	:	
Bloom et al.	:	DECISION ON PETITION
Application No. 11/418,438	:	TO MAKE SPECIAL
Filed: May 3, 2006	:	37 CFR 1.102(D)
Attorney Docket No. WESTERN.016C3	:	

This is a decision on the petition under 37 CFR 1.102(c) (2)(ii), filed May 3, 2006, to make the above-identified application special based on the invention materially contributing to the development or conservation of energy resources as set forth in M.P.E.P. § 708.02, Section VI.

The petition is **DISMISSED**.

A grantable petition to make an application special under 37 CFR 1.102(c)(ii) and MPEP § 708.02, Section VI: Energy, must state how the invention materially contributes to (A) the discovery or development of energy resources, or (b) the more efficient utilization and conservation of energy resources. If the disclosure is not clear on its face that the claimed invention materially contributes category (A) or (B), the petition must be accompanied by a statement by the applicant, assignee, or an attorney/agent registered to practice before the Office explaining how the materiality standard is met. Examples of inventions in category (A) would be developments in fossil fuels (natural gas, coal, and petroleum), hydrogen fuel technologies, nuclear energy, solar energy, etc. Category (B) would include inventions relating to the reduction of energy consumption in combustion systems, industrial equipment, household appliances, etc. No fee is required.

The petition states, "Thus, the claimed tools and gripper assemblies provide significant advantages over prior art tools and grippers." This statement lacks any specifics about how the claimed invention materially contributes to item (A), above, and fails to establish for the record that the invention "materially contributes to the discovery and development of energy resources."

Further correspondence with respect to this matter should be addressed as follows:

By Mail: Mail Stop PETITION
Commissioner for Patents
P. O. Box 1450
Alexandria, VA 22313-1450

By hand: U. S. Patent and Trademark Office
Customer Service Window, Mail Stop Petitions
Randolph Building
401 Dulany Street
Alexandria, VA 22314

By FAX: (571) 273-8300

Telephone inquiries concerning this decision should be directed to Petitions Examiner Liana Walsh at 571-272-3206. All other inquiries concerning either the examination or status of the application should be directed to the Technology Center.

This matter is being referred to Technology Center Art Unit 3672 for action in its regular turn.

David Bucci
Petitions Examiner
Office of Petitions

UNITED STATES PATENT AND TRADEMARK OFFICE

Commissioner for Patents
United States Patent and Trademark Office
P.O. Box 1450
Alexandria, VA 22313-1450
www.uspto.gov

COPY MAILED

DEC 1 5 2008

OFFICE OF PETITIONS

THE SCRIPPS RESEARCH INSTITUTE
OFFICE OF PATENT COUNSEL, TPC-8
10550 NORTH TORREY PINES ROAD
LA JOLLA CA 92037

In re Application of	:	
Beutler, et al.	:	
Application No.: ~~11/418,455~~ **11/418,445**	:	DECISION
Filing Date: 4 May, 2006	:	
Attorney Docket No. SCRP-0089	:	

This is a decision on the petition filed on 7 November, 2008, resubmitted on 1 December, 2008, and properly considered as a petition requesting withdrawal of the holding of abandonment under 37 C.F.R. §1.181.

The petition to withdraw the holding of abandonment under 37 C.F.R. §1.181 is **GRANTED**.

As to the Request to Withdraw
the Holding of Abandonment

Petitioners always are directed to the Commentary at MPEP §711.03(c)(I) for guidance as to the proper showing and timeliness requirements for relief under 37 C.F.R. §1.181.

BACKGROUND

The record reflects that:

Petitioner failed to reply timely and properly to the non-final Office action mailed on 25 March, 2008, with reply due absent extension of time on or before 25 June, 2008.

The application went abandoned after midnight 25 June, 2008.

The Office mailed a Notice of Abandonment on 10 October, 2008.

On 7 November, 2008, Petitioner filed a petition seeking withdrawal of the holding of abandonment under the provisions of 37 C.F.R. §1.181, and averred timely filing and submitted in support thereof a copy of a request and fee for extension of time, the reply in the form of an amendment, and a date-stamped ("JUL 08 2008") receipt card.

Thus, Petitioner appears to have satisfied the showing requirements under the rule as set forth at MPEP §711.03(c)(I).

The availability of applications and application papers online to applicants/practitioners who diligently associate their Customer Number with the respective application(s) now provides an applicant/practitioner on-demand information as to events/transactions in an application. Thus, now if one wishes to know the progress in and/or status of an application or the accuracy of the data therein, one need only look at the file online.

Out of an abundance of caution, Petitioners always are reminded that those registered to practice *and* all others who make representations before the Office must inquire into the underlying facts of representations made to the Office and support averments with the appropriate documentation–since all owe to the Office the continuing duty to disclose.[1]

STATUTES, REGULATIONS

Congress has authorized the Commissioner to "revive an application if the delay is shown to the satisfaction of the Commissioner to have been "unavoidable." 35 U.S.C. §133 (1994). And the regulations at 37 C.F.R. §1.137(a) and (b) set forth the requirements for a Petitioner to revive a previously unavoidably or unintentionally, respectively, abandoned application.[2],[3]

Moreover, the Office has set forth in the Commentary at MPEP §711.03(c)(I) the showing and timeliness requirements for a proper showing for relief under 37 C.F.R. §1.181 in these matters.

Allegations as to the Request to Withdraw the Holding of Abandonment

The record evidences a satisfactory presentation of the showing requirements under the Rule.

---

[1] See supplement of 17 June, 1999. The Patent and Trademark Office is relying on petitioner's duty of candor and good faith and accepting a statement made by Petitioner. See Changes to Patent Practice and Procedure, 62 Fed. Reg. at 53160 and 53178, 1203 Off. Gaz. Pat. Office at 88 and 103 (responses to comments 64 and 109)(applicant obligated under 37 C.F.R. §10.18 to inquire into the underlying facts and circumstances when providing statements to the Patent and Trademark Office). See specifically, the regulations at 37 C.F.R. §10.18.

[2] See: Changes to Patent Practice and Procedure; Final Rule Notice, 62 Fed. Reg. at 53158-59 (October 10, 1997), 1203 Off. Gaz. Pat. Office at 86-87 (October 21, 1997).

[3] The language of 35 U.S.C. §133 and 37 C.F.R. §1.137(a) is clear, unambiguous, and without qualification: the delay in tendering the reply to the outstanding Office action, as well as filing the first petition seeking revival, must have been unavoidable for the reply now to be accepted on petition. (Therefore, by example, an unavoidable delay in the payment of the Filing Fee might occur if a reply is shipped by the US Postal Service, but due to catastrophic accident, the delivery is not made.) Delays in responding properly raise the question whether delays are unavoidable. Where there is a question whether the delay was unavoidable, Petitioners must meet the burden of establishing that the delay was unavoidable within the meaning of 35 U.S.C. §133 and 37 C.F.R. §1.137(a) And the Petitioner must be diligent in attending to the matter. Failure to do so does not constitute the care required under Pratt, and so cannot satisfy the test for diligence and due care. (By contrast, unintentional delays are those that do not satisfy the very strict statutory and regulatory requirements of unavoidable delay, and also, by definition, are not intentional.))

CONCLUSION

The petition as considered under 37 C.F.R. §1.181 is **granted**, and the 10 October, 2008, Notice of Abandonment is **vacated**.

The instant application is released to Technology Center/AU (TC/AU) 1647 for further processing in due course.

Petitioner may find it beneficial to view Private PAIR within a fortnight of the instant decision to ensure that the revival has been acknowledged by the TC/AU in response to this decision. It is noted that all inquiries with regard to that change in status need be directed to the TC/AU where that change of status must be effected—that does not occur in the Office of Petitions.

Telephone inquiries regarding this decision may be directed to the undersigned at (571) 272-3214—it is noted, however, that all practice before the Office is in writing (see: 37 C.F.R. §1.2[4]) and the proper authority for action on any matter in this regard are the statutes (35 U.S.C.), regulations (37 C.F.R.) and the commentary on policy (MPEP). Therefore, no telephone discussion may be controlling or considered authority for Petitioner's action(s).

/John J. Gillon, Jr./
John J. Gillon, Jr.
Senior Attorney
Office of Petitions

[4] The regulations at 37 C.F.R. §1.2 provide:
§1.2 Business to be transacted in writing.
All business with the Patent and Trademark Office should be transacted in writing. The personal attendance of applicants or their attorneys or agents at the Patent and Trademark Office is unnecessary. The action of the Patent and Trademark Office will be based exclusively on the written record in the Office. No attention will be paid to any alleged oral promise, stipulation, or understanding in relation to which there is disagreement or doubt.

UNITED STATES PATENT AND TRADEMARK OFFICE

Commissioner for Patents
United States Patent and Trademark Office
P.O. Box 1450
Alexandria, VA 22313-1450
www.uspto.gov

COPY MAILED
AUG 17 2006
OFFICE OF PETITIONS

HALL, MYERS, VANDE SANDE & PEQUIGNOT, LLP
10220 RIVER ROAD, SUITE 200
POTOMAC MD 20854

In re Application of	:
Oilver	:
Application No. 11/418,476	: DECISION ON PETITION
Filed: May 5, 2006	:
Attorney Docket No. 3025.116	:
Title of Invention: Method and Apparatus For Generation Of Magnetization Transfer Contrast in Steady State Free Precession Magnetic Resonance Imaging	:

This is a decision on the petition filed May 22 2006, requesting that the above-identified application be accorded a filing date of May 4, 2006, instead of the presently accorded filing date of May 5, 2006.

Petitioners request the earlier filing date on the basis that the application was filed with the Office on May 4, 2006. Petitioner states the application was mailed as Express Mail Label ER605768533US .

Paragraph (a) of 37 CFR 1.10 states that:

> Any correspondence received by the Patent and Trademark Office (Office) that was delivered by the "Express Mail Post Office to Addressee" service of the United States Postal Service (USPS) will be considered filed in the Office on the date of deposit with the USPS. The date of deposit with the USPS is shown by the "date-in" on the "Express Mail" mailing label or other official USPS notation. If the USPS deposit date cannot be determined, the correspondence will be accorded the Office receipt date as the filing date.[1] (emphasis added)

Paragraph (c) of 37 CFR 1.10 states that:

> Any person filing correspondence under this section that was received by the Office and delivered by the "Express Mail Post Office to Addressee" service of the USPS, who can show that the "date-in" on the "Express Mail" mailing label or other official notation entered by the USPS was incorrectly entered or omitted by the USPS, may petition the Commissioner to accord the correspondence a filing date as of the date

[1] See 37 CFR 1.6(a).

the correspondence is shown to have been deposited with the USPS, provided that:

(1) The petition is filed promptly after the person becomes aware that the Office has accorded, or will accord, a filing date other than the USPS deposit date;

(2) The number of the "Express Mail" mailing label was placed on the paper(s) or fee(s) that constitute the correspondence prior to the original mailing by "Express Mail"; and

(3) The petition includes a true copy of the "Express Mail" mailing label showing the "date-in," and of any other official notation by the USPS relied upon to show the date of deposit.

The petition lacks the showing required for item (3).

The petition is **DISMISSED**.

Any request for reconsideration should be filed within **TWO MONTHS** of the date of this decision to be considered timely. No extensions of time under 37 CFR 1.136 are available.

By mail:	Mail Stop Petition Commissioner for Patents P.O. Box 1450 Alexandria, VA 22313-1450
By facsimile:	(571) 273-8300
By delivery service: (FedEx, UPS, DHL, etc.)	U.S. Patent and Trademark Office Customer Service Window, Randolph Building 401 Dulany Street Alexandria, VA 22314

Telephone inquiries may be directed to the undersigned at (571) 272-3215.

Charlema. R. Grant
Petitions Attorney
Office of Petitions

UNITED STATES PATENT AND TRADEMARK OFFICE

Commissioner for Patents
United States Patent and Trademark Office
P.O. Box 1450
Alexandria, VA 22313-1450
www.uspto.gov

HALL, MYERS, VANDE SANDE & PEQUIGNOT, LLP
10220 RIVER ROAD, SUITE 200
POTOMAC MD 20854

COPY MAILED

DEC 0 4 2006

OFFICE OF PETITIONS

In re Application of :
Oilver :
Application No. 11/418,476 : DECISION ON PETITION
Filed: May 5, 2006 :
Attorney Docket No. 3025.116 :
Title of Invention: Method and Apparatus For Generation Of Magnetization Transfer Contrast in Steady State Free Precession Magnetic Resonance Imaging :

This is a decision on the renewed petition filed August 23, 2006, requesting that the above-identified application be accorded a filing date of May 4, 2006, instead of the presently accorded filing date of May 5, 2006.

Petitioners request the earlier filing date on the basis that the application was filed with the Office on May 4, 2006. Petitioner states the application was mailed as Express Mail Label ER605768533US .

Petitioner contends the application was deposited in Express Mail service on May 4, 2006. In support, petitioner supplied a copy of Express Mail receipt No. ER605768533US (the same Express Mail number found on the itemized transmittal sheet accompanying the original application papers located in the official file). The Express Mail Label shows a date-in of May 4, 2006. A review of the United States Postal Service's Express Mail Information Database shows the Express Mail package was accepted by the United States Postal Service on May 4, 2006.

In view of the above, the petition is **Granted**. No petition fee is required and none has been charged.

The application is being forwarded to Office of Initial Patent Examination for correction of the filing date to **May 4, 2006** and issuance of a corrected Filing Receipt.

Telephone inquiries may be directed to the undersigned at (571) 272-3215.

Charlema R. Grant

Charlema. R. Grant
Petitions Attorney
Office of Petitions

UNITED STATES PATENT AND TRADEMARK OFFICE

UNITED STATES DEPARTMENT OF COMMERCE
United States Patent and Trademark Office
Address: COMMISSIONER FOR PATENTS
P.O. Box 1450
Alexandria, Virginia 22313-1450
www.uspto.gov

HARMAN - BRINKS HOFER CHICAGO
Brinks Hofer Gilson & Lione
P.O. Box 10395
Chicago, IL 60610

Mail Date: 04/21/2010

Applicant	: Sheridan Ethier	: DECISION ON REQUEST FOR
Patent Number	: 7624260	: RECALCULATION of PATENT
Issue Date	: 11/24/2009	: TERM ADJUSTMENT IN VIEW
Appliction No	: 11/418,481	: OF WYETH AND NOTICE OF INTENT TO
Filed	: 05/04/2006	: ISSUE CERTIFICATE OF CORRECTION
		:

The Request for Recalculation is **GRANTED** to the extent indicated.

The patent term adjustment has been determined to be **814** days. The USPTO will *sua sponte* issue a certificate of correction reflecting the amount of PTA days determined by the recalculation.

Prior to the issuance of the certificate of correction, the USPTO will afford patentee an opportunity to be heard and request reconsideration. Accordingly, patentee has **one month or thirty (30) days**, whichever is longer, to file a request for reconsideration of this patent term adjustment calculation. See 35 U.S.C. 154(b)(3)(B)(ii) and 37 CFR 1.322(a)(4). No extensions of time will be granted under 37 CFR 1.136.

Patentee should use document code PET.OP if electronically filing a request for reconsideration of this patent term adjustment calculation. The patentee must also include the information required by 37 CFR 1.705(b)(2) and the fee required by 37 CFR 1.18(e). If patentee does not file a timely request for reconsideration of this patent term adjustment calculation including the information required by 37 CFR 1.705(b)(2) and the fee required by 37 CFR 1.18(e), the USPTO will issue a certificate of correction reflecting the PTA determination noted above.

Patentee should be aware that in order to preserve the right to review in the United States District Court for the District of Columbia of the USPTO patent term adjustment determination, patentee must ensure that he or she also take the steps required under 35 U.S.C. 154(b)(4)(A) in a timely manner. Nothing in the request for recalculation should be construed as providing an alternative time frame for commencing a civil action under 35 U.S.C. 154(b)(4)(A).

Any questions concerning this decision should be directed to the Office of Patent Legal Administration at 571-272-7702.

UNITED STATES PATENT AND TRADEMARK OFFICE

UNITED STATES DEPARTMENT OF COMMERCE
United States Patent and Trademark Office
Address: COMMISSIONER FOR PATENTS
P.O. Box 1450
Alexandria, Virginia 22313-1450
www.uspto.gov

SEAGATE TECHNOLOGY LLC
C/O WESTMAN, CHAMPLIN & KELLY, P.A.
SUITE 1400
900 SECOND AVENUE SOUTH
MINNEAPOLIS, MN 55402-3244

Mail Date: 04/21/2010

Applicant	: Wentao Yan	: DECISION ON REQUEST FOR
Patent Number	: 7656619	: RECALCULATION of PATENT
Issue Date	: 02/02/2010	: TERM ADJUSTMENT IN VIEW
Appliction No	: 11/418,512	: OF WYETH AND NOTICE OF INTENT TO
Filed	: 05/04/2006	: ISSUE CERTIFICATE OF CORRECTION
		:

The Request for Recalculation is **GRANTED** to the extent indicated.

The patent term adjustment has been determined to be **676** days. The USPTO will *sua sponte* issue a certificate of correction reflecting the amount of PTA days determined by the recalculation.

Prior to the issuance of the certificate of correction, the USPTO will afford patentee an opportunity to be heard and request reconsideration. Accordingly, patentee has **one month or thirty (30) days**, whichever is longer, to file a request for reconsideration of this patent term adjustment calculation. See 35 U.S.C. 154(b)(3)(B)(ii) and 37 CFR 1.322(a)(4). No extensions of time will be granted under 37 CFR 1.136.

Patentee should use document code PET.OP if electronically filing a request for reconsideration of this patent term adjustment calculation. The patentee must also include the information required by 37 CFR 1.705(b)(2) and the fee required by 37 CFR 1.18(e). If patentee does not file a timely request for reconsideration of this patent term adjustment calculation including the information required by 37 CFR 1.705(b)(2) and the fee required by 37 CFR 1.18(e), the USPTO will issue a certificate of correction reflecting the PTA determination noted above.

Patentee should be aware that in order to preserve the right to review in the United States District Court for the District of Columbia of the USPTO patent term adjustment determination, patentee must ensure that he or she also take the steps required under 35 U.S.C. 154(b)(4)(A) in a timely manner. Nothing in the request for recalculation should be construed as providing an alternative time frame for commencing a civil action under 35 U.S.C. 154(b)(4)(A).

Any questions concerning this decision should be directed to the Office of Patent Legal Administration at 571-272-7702.

UNITED STATES PATENT AND TRADEMARK OFFICE

JAN 26 2007

Commissioner for Patents
United States Patent and Trademark Office
P.O. Box 1450
Alexandria, VA 22313-1450
www.uspto.gov

PHARMACEUTICAL PATENT ATTORNEYS, LLC
55 MADISON AVENUE
4TH FLOOR
MORRISTOWN NJ 07960-7397

In re Application of	:
Joseph J. Krivulka et al	:
Serial No.: 11/418,514	: PETITION TO MAKE SPECIAL
Filed: May 4, 2006	:
Attorney Docket No.: Triax	:

This is in response to applicants' petition filed May 4, 2006, to make the above-identified application special under the provisions of 37 CFR 1.102(d).

Applicant has satisfied the provisions set forth in M.P.E.P. 708.02, VIII. Therefor the petition is **GRANTED**.

The following condition applies to the grant of this petition: If, upon examination, it is determined that a restriction requirement is necessary because of multiple inventions being claimed, applicant will be required to make an election without traverse of a single invention to be prosecuted. Failure to make an election without traverse will void the special status accorded in this decision.

The application will be forwarded the examiner for action on the merits commensurate with this decision.

Should there be any questions with regard to this letter please contact William R. Dixon, Jr. by letter addressed to the Director, Technology Center 1600, P.O. Box 1450, Alexandria, VA 22313-1450, or by telephone at 571-272-0519 or by facsimile transmission at the general Office facsimile number, 571-273-8300.

William R. Dixon, Jr.
Special Program Examiner
Technology Center 1600

UNITED STATES PATENT AND TRADEMARK OFFICE

APR 0 8 2008

Commissioner for Patents
United States Patent and Trademark Office
P.O. Box 1450
Alexandria, VA 22313-1450
www.uspto.gov

Mark Pohl
PHARMACEUTICAL PATENT ATTORNEYS, LLC
55 MADISON AVENUE
4TH FLOOR
MORRISTOWN, NJ 07960-739

In re Application of:	:
KRIVULKA et al.	: Decision on Petition
Serial No.: 11/418,514	:
Filed: May 04, 2006	:
Attorney Docket No.: Triax	:

This letter is in response to the Petition filed under 37 C.F.R. 1.144 filed on January 5, 2008 requesting review of the restriction requirement.

BACKGROUND

On March 12, 2007, the examiner mailed a restriction requirement that divided claims 1-14 into two groups as follows:

> Group I. Claims 1-7, drawn to a kit for treating acne comprising tretinoin and one or more herbals therein, classified in class 424, subclass 729, for example.
>
> Group II. Claims 8-14, drawn to a method for treating acne, classified in class 514, subclass 570, for example.

The examiner provided the following reason for setting forth the restriction requirement:

> Inventions I and II are related as product and process of use. The inventions can be shown to be distinct if either or both of the following can be shown: (1) the process for using the product as claimed can be practiced with another materially different product or (2) the product as claimed can be used in a materially different process of using that product. See MPEP § 806.05(h). In the instant case, there are numerous ways to treat acne vulgaris which do not require the ingredients recited in the Group I product (including various prior art over-the- counter and/or prescription medications).
>
> Because these inventions are independent or distinct for the reasons given above and there would be a serious burden on the examiner if restriction is not required because the inventions require a

different field of search (see MPEP § 808.02), restriction for examination purposes as indicated is proper.

On May 22, 2007, Applicants elected Group I, claims 1-7 with traverse.

On July 6, 2007, the examiner considered applicants' traversal and made the restriction requirement FINAL. The examiner withdrew claims 8-14 from examination on the merits as these claims were directed toward a non-elected invention, and examined Group I, claims 1-7 on their merits.

On January 5, 2008, applicants filed this petition.

DISCUSSION

The file history and Applicants' petition filed January 5, 2008 have been considered carefully.

Independent claims 1 (Group I) and 8 (Group II) recite:

> 1.A kit for treatment of acne vulgaris, the kit comprising:
>
> > a. tretinoin in a formulation acceptable for topical use, the formulation containing an amount of tretinoin effective for topical use to treat ache vulgaris;
> >
> > b. a non-soap skin cleanser having a formulation which avoids exacerbating tretinoin-associated skin irritation with tretinoin; and
> >
> > c. a non-greasy skin moisturizer having a formulation which avoids exacerbating tretinoin-associated skin irritation with tretinoin; and
> >
> > d. packaging presenting said tretinoin, said skin cleanser and said skin moisturizer to a user for use together.
>
> 8. A method for the treatment of acne vulgaris, the method comprising:
>
> > a. providing to a patient in need thereof tretinoin in a formulation acceptable for topical use, the formulation containing an amount of tretinoin effective for topical use to treat ache vulgaris;
> >
> > b. providing to said patient a non-soap skin cleanser having a formulation which avoids exacerbating tretinoin-associated skin irritation with tretinoin; and
> >
> > c. providing to said patient a non-greasy skin moisturizer having a formulation which avoids exacerbating tretinoin- associated skin irritation with tretinoin.

First, Applicants argue that "[t]he Office may consider three factors in evaluating whether involuntary restriction may be properly imposed", that being, different classification, separate status in the art and field of search (pp. 4-5, petition). Applicants argue that the examiner has not set forth any evidence that the claims are classified differently, have a separate status in the art and have a different field of search. It is conceded that the examiner has not set forth explicit

reasons that the claims would have a separate status in the art or a different field of search. With regard to the claims having a different classification, applicants argue:"[i]n the instant case, the two independent claims have not been classified in different classifications. The Examiner does not dispute this" (p. 4, petition). However, this argument is not found persuasive because it is clearly seen in the restriction requirement set forth by the examiner on March 12, 2007 that the two Groups, are classified differently. Group I is classified in Class 424 subclass 729. Group II is classified in class 514, subclass 570. Accordingly, since Groups I and II are classified separately, this intrinsically demonstrates that the Inventions of Groups I and II have a separate status in the art.

Second, Applicants argue that the examiner did not apply proper reasoning for restriction between Groups I and II in that the examiner indicated that Groups I and II were related as product and process for using and only provided reasons why the method of Group II could be carried out with a different 'product' than the 'product' of Group I (pp. 6-10, petition). Applicants thus contend that the examiner's reasoning for restricting Groups I and II fail to provide a *prima facie* case of distinctness because there is no evidence of record which successfully indicates, by law, that the Inventions of Groups I and II are in fact independent and distinct.

It is conceded that Groups I and II could have been considered related as apparatus and process for using the apparatus, for which the following parameters apply:

> Inventions I and II are related as process and apparatus for its practice. The inventions are distinct if it can be shown that either: (1) the process as claimed can be practiced by another and materially different apparatus or by hand, or (2) the apparatus as claimed can be used to practice another and materially different process. (MPEP § 806.05(e)).

While the examiner recognized applicants' point on this matter, the examiner indicated that if the Groups were related as apparatus and process for using the apparatus, that the same reasoning would apply as was set forth in the original requirement for restriction: because the process could employ a different product/apparatus than as stated in Group I, the restriction would still be proper (see non-final Office action, p. 2). Here, it is conceded that the examiner used incorrect reasoning in order to show distinction between Groups I and II. The process of claim 8, *as claimed,* required the product/apparatus of claim 1 for its practice. However, it is herein shown that the Inventions of Groups I and II are indeed distinct for a different reason.

Inventions I and II are related as process and apparatus for its practice. The inventions are distinct if it can be shown that either: (1) the process as claimed can be practiced by another and materially different apparatus or by hand, or (2) the apparatus as claimed can be used to practice another and materially different process. (MPEP § 806.05(e)). In the Instant case, the apparatus ('kit') of Group I can be used to practice another and materially different process. First, Group II is specifically directed toward a method for treating acne vulgaris, a particular type of acne. The apparatus of Group I can be used to treat other types of skin disorders such as psoriasis or lichen planus, in that tretinoin is specifically known to treat such disorders (see; e.g., Shaffer et al. (US 5,760,079) col. 1, lines 40-47).

Restriction for examination purposes as indicated is proper because all these inventions listed in this action are independent or distinct for the reasons given above and there would be a serious search and examination burden if restriction were not required because one or more of the following reasons apply:

(a) the inventions have acquired a separate status in the art in view of their different classification;

(b) the inventions have acquired a separate status in the art due to their recognized divergent subject matter;

(c) the inventions require a different field of search (for example, searching different classes/subclasses or electronic resources, or employing different search queries);

(d) the prior art applicable to one invention would not likely be applicable to another invention;

(e) the inventions are likely to raise different non-prior art issues under 35 U.S.C. 101 and/or 35 U.S.C. 112, first paragraph.

Although applicant is correct that the examiner provided incorrect reasons for showing distinctness, Groups I and II are nevertheless distinct for the correct reasoning described above. Concurrent examination of Group I and II would be a serious burden.

It is noted that whether Group I is called a product or an apparatus, the product and process rejoinder practice under MPEP 821.04(b) would apply should all claims to an elected product/apparatus be found allowable.

Notice of Potential Rejoinder of Process Claims in Ochiai/Brouwer Situation

The examiner has required restriction between product and process claims. Where applicant elects claims directed to the product, and the product claims are subsequently found allowable, withdrawn process claims that depend from or otherwise require all the limitations of the allowable product claim will be considered for rejoinder. All claims directed to a nonelected process invention must require all the limitations of an allowable product claim for that process invention to be rejoined.

In the event of rejoinder, the requirement for restriction between the product claims and the rejoined process claims will be withdrawn, and the rejoined process claims will be fully examined for patentability in accordance with 37 CFR 1.104. Thus, to be allowable, the rejoined claims must meet all criteria for patentability including the requirements of 35 U.S.C. 101, 102, 103 and 112. Until all claims to the elected product are found allowable, an otherwise proper restriction requirement between product claims and process claims may be maintained. Withdrawn process claims that are not commensurate in scope with an allowable product claim will not be rejoined. See MPEP § 821.04(b). Additionally, in order to retain the right to rejoinder in accordance with the above policy, applicant is advised that the process claims should be amended during prosecution to require the limitations of the product claims. Failure to do so may result in a loss of the right to rejoinder. Further, note that the prohibition against double patenting rejections of 35 U.S.C. 121 does not apply where the restriction requirement is withdrawn by the examiner before the patent issues. See MPEP § 804.01.

DECISION

The Petition filed under 37 C.F.R. 1.144 filed on January 5, 2008 is **DENIED**.

The application will be forwarded to the examiner for consideration of the papers filed 27 December 2007, 14 February 2008 and 5 March 2008 and prepare an Office action consistent with this decision.

Should all claims to the elected product invention become allowable, the examiner should consider rejoinder of process claims per MPEP 821.04(b).

Any request for reconsideration of this decision should be mailed within two months of the mail date of this decision.

Should there be any questions about this decision please contact Quality Assurance Specialist Julie Burke, by letter addressed to Director, TC 1600, at the address listed above, or by telephone at 571-272-0512 or by facsimile sent to the general Office facsimile number, 571-273-8300.

John Le Guyader for

George Elliott
Director, Technology Center 1600

JOHN LEGUYADER
DIRECTOR
TECHNOLOGY CENTER 1600

UNITED STATES PATENT AND TRADEMARK OFFICE

Commissioner for Patents
United States Patent and Trademark Office
P.O. Box 1450
Alexandria, VA 22313-1450
www.uspto.gov

BRIAN ROFFE, ESQ
11 SUNRISE PLAZA, SUITE 303
VALLEY STREAM NY 11580-6111

COPY MAILED

JAN 31 2007

OFFICE OF PETITIONS

In re Application of	:	
BREED, David S.	:	
Application No. 11/418,517	:	DECISION ON PETITION
Filed: May 4, 2006	:	TO MAKE SPECIAL UNDER
Attorney Docket No. ATI-411	:	37 CFR 1.102(c)(1)
	:	

This is a decision on the petition under 37 CFR 1.102(c)(1), filed August 28, 2006, to make the above-identified application special based on applicant's age as set forth in M.P.E.P. § 708.02, Section IV.

The petition is **GRANTED**.

A grantable petition to make an application special under 37 CFR 1.102(c)(1) and MPEP § 708.02, Section IV: Applicant's Age, must be accompanied by evidence showing that at least one of the applicants is 65 years of age, or more, such as a birth certificate or a statement by applicant. No fee is required.

The instant petition includes a copy of the passport of inventor David S. Breed, attesting to his age. Accordingly, the above-identified application has been accorded "special" status.

Telephone inquiries concerning this decision should be directed to the undersigned at 571-272-7253.

All other inquiries concerning either the examination or status of the application should be directed to the Technology Center.

The application is being forwarded to the Technology Center Art Unit 3616 for action on the merits commensurate with this decision.

Monica A. Graves
Petitions Examiner
Office of Petitions

UNITED STATES PATENT AND TRADEMARK OFFICE

Commissioner for Patents
United States Patent and Trademark Office
P.O. Box 1450
Alexandria, VA 22313-1450
www.uspto.gov

AGILENT TECHNOLOGIES INC.
INTELLECTUAL PROPERTY ADMINISTRATION, LEGAL DEPT
MS BLDG. E. P. O. BOX 7599
LOVELAND, CO 80537

COPY MAILED

APR 26 2007

OFFICE OF PETITIONS

In re Application of	:	
Colin Johnstone	:	
Application No. 11/418,552	:	DECISION GRANTING
Filed: May 4, 2006	:	PETITION
Attorney Docket No. 30051152-02	:	

This is a decision on the petition, filed July 13, 2006, requesting that the above-identified application be accorded a filing date of May 4, 2006, rather than the presently accorded date of May 5, 2006. The petition is properly treated as a petition under 37 CFR 1.10(d).

Petitioner alleges that the application was deposited in Express Mail Service on May 4, 2006. In support of this allegation, petitioner has submitted a copy of Express Mail label receipt no. ED566299297US and a copy of a U.S. Postal Service (USPS) postal receipt having a May 4, 2006 date of receipt of a package. The above-noted Express Mail label number appears on the originally filed application papers of record in this file.

The Express Mail label is not evidence of the date of deposit of the package in question since the "date-in" is blank. Further, as the USPS postal receipt does not reference the Express Mail label number for the package in question, this, too, is not evidence that the package constituting the application papers for this file were entrusted to the USPS on May 4, 2006. However, in an independent search of the USPS Express Mail Track and Confirm record for the Express Mail package in question, it was found that the the package was entrusted to the USPS on May 4, 2006.

Accordingly, the USPS Express Mail Track and Confirm record is sufficient to establish that the application papers for this file were entrusted to the USPS on May 4, 2006. Accordingly, this application is entitled to a filing date of May 4, 2006 and has been so accorded.

The petition is **GRANTED**. A Corrected Filing Receipt accompanies this decision on petition.

A petition under 37 CFR 1.10(d) does not require a fee. Accordingly, the $130 fee assessed to this petition will be refunded to petitioner's deposit account in due course.

Telephone inquiries relating to this decision should be directed Irvin Dingle at (571) 272-3210.

Frances Hicks

Frances Hicks
Petition Examiner
Office of Petitions

UNITED STATES PATENT AND TRADEMARK OFFICE

UNITED STATES DEPARTMENT OF COMMERCE
United States Patent and Trademark Office
Address: COMMISSIONER FOR PATENTS
P.O. Box 1450
Alexandria, Virginia 22313-1450
www.uspto.gov

APPL NO.	FILING OR 371(c) DATE	ART UNIT	FIL FEE REC'D	ATTY.DOCKET NO	TOT CLMS	IND CLMS
11/418,552	05/04/2006	2827	1000	30051152-02	18	2

CONFIRMATION NO. 9989

CORRECTED FILING RECEIPT

OC000000023543776

22878
AGILENT TECHNOLOGIES INC.
INTELLECTUAL PROPERTY ADMINISTRATION,LEGAL DEPT.
MS BLDG. E P.O. BOX 7599
LOVELAND, CO 80537

Date Mailed: 04/26/2007

Receipt is acknowledged of this regular Patent Application. It will be considered in its order and you will be notified as to the results of the examination. Be sure to provide the U.S. APPLICATION NUMBER, FILING DATE, NAME OF APPLICANT, and TITLE OF INVENTION when inquiring about this application. Fees transmitted by check or draft are subject to collection. Please verify the accuracy of the data presented on this receipt. **If an error is noted on this Filing Receipt, please mail to the Commissioner for Patents P.O. Box 1450 Alexandria Va 22313-1450. Please provide a copy of this Filing Receipt with the changes noted thereon. If you received a "Notice to File Missing Parts" for this application, please submit any corrections to this Filing Receipt with your reply to the Notice. When the USPTO processes the reply to the Notice, the USPTO will generate another Filing Receipt incorporating the requested corrections (if appropriate).**

Applicant(s)

Colin Johnstone, Inverkeithing, UNITED KINGDOM;

Power of Attorney: The patent practitioners associated with Customer Number **022878**.

Domestic Priority data as claimed by applicant

Foreign Applications

UNITED KINGDOM 0509856.1 05/13/2005

If Required, Foreign Filing License Granted: 06/02/2006

The country code and number of your priority application, to be used for filing abroad under the Paris Convention, is US11/418,552

Projected Publication Date: Not Applicable

Non-Publication Request: No

Early Publication Request: No

Title

Apparatus and method for updating data in a dual port memory

Preliminary Class

365

PROTECTING YOUR INVENTION OUTSIDE THE UNITED STATES

Since the rights granted by a U.S. patent extend only throughout the territory of the United States and have no effect in a foreign country, an inventor who wishes patent protection in another country must apply for a patent in a specific country or in regional patent offices. Applicants may wish to consider the filing of an international application under the Patent Cooperation Treaty (PCT). An international (PCT) application generally has the same effect as a regular national patent application in each PCT-member country. The PCT process **simplifies** the filing of patent applications on the same invention in member countries, but **does not result** in a grant of "an international patent" and does not eliminate the need of applicants to file additional documents and fees in countries where patent protection is desired.

Almost every country has its own patent law, and a person desiring a patent in a particular country must make an application for patent in that country in accordance with its particular laws. Since the laws of many countries differ in various respects from the patent law of the United States, applicants are advised to seek guidance from specific foreign countries to ensure that patent rights are not lost prematurely.

Applicants also are advised that in the case of inventions made in the United States, the Director of the USPTO must issue a license before applicants can apply for a patent in a foreign country. The filing of a U.S. patent application serves as a request for a foreign filing license. The application's filing receipt contains further information and guidance as to the status of applicant's license for foreign filing.

Applicants may wish to consult the USPTO booklet, "General Information Concerning Patents" (specifically, the section entitled "Treaties and Foreign Patents") for more information on timeframes and deadlines for filing foreign patent applications. The guide is available either by contacting the USPTO Contact Center at 800-786-9199, or it can be viewed on the USPTO website at http://www.uspto.gov/web/offices/pac/doc/general/index.html.

For information on preventing theft of your intellectual property (patents, trademarks and copyrights), you may wish to consult the U.S. Government website, http://www.stopfakes.gov. Part of a Department of Commerce initiative, this website includes self-help "toolkits" giving innovators guidance on how to protect intellectual property in specific countries such as China, Korea and Mexico. For questions regarding patent enforcement issues, applicants may call the U.S. Government hotline at 1-866-999-HALT (1-866-999-4158).

LICENSE FOR FOREIGN FILING UNDER
Title 35, United States Code, Section 184
Title 37, Code of Federal Regulations, 5.11 & 5.15

GRANTED

The applicant has been granted a license under 35 U.S.C. 184, if the phrase "IF REQUIRED, FOREIGN FILING LICENSE GRANTED" followed by a date appears on this form. Such licenses are issued in all applications where the conditions for issuance of a license have been met, regardless of whether or not a license may be required as set forth in 37 CFR 5.15. The scope and limitations of this license are set forth in 37 CFR 5.15(a) unless an earlier license has been issued under 37 CFR 5.15(b). The license is subject to revocation upon written notification. The date indicated is the effective date of the license, unless an earlier license of similar scope has been granted under 37 CFR 5.13 or 5.14.

This license is to be retained by the licensee and may be used at any time on or after the effective date thereof unless it is revoked. This license is automatically transferred to any related applications(s) filed under 37 CFR

1.53(d). This license is not retroactive.

The grant of a license does not in any way lessen the responsibility of a licensee for the security of the subject matter as imposed by any Government contract or the provisions of existing laws relating to espionage and the national security or the export of technical data. Licensees should apprise themselves of current regulations especially with respect to certain countries, of other agencies, particularly the Office of Defense Trade Controls, Department of State (with respect to Arms, Munitions and Implements of War (22 CFR 121-128)); the Bureau of Industry and Security, Department of Commerce (15 CFR parts 730-774); the Office of Foreign Assets Control, Department of Treasury (31 CFR Parts 500+) and the Department of Energy.

NOT GRANTED

No license under 35 U.S.C. 184 has been granted at this time, if the phrase "IF REQUIRED, FOREIGN FILING LICENSE GRANTED" DOES NOT appear on this form. Applicant may still petition for a license under 37 CFR 5.12, if a license is desired before the expiration of 6 months from the filing date of the application. If 6 months has lapsed from the filing date of this application and the licensee has not received any indication of a secrecy order under 35 U.S.C. 181, the licensee may foreign file the application pursuant to 37 CFR 5.15(b).

UNITED STATES PATENT AND TRADEMARK OFFICE

Commissioner for Patents
United States Patent and Trademark Office
P.O. Box 1450
Alexandria, VA 22313-1450
www.uspto.gov

AGILENT TECHNOLOGIES INC.
INTELLECTUAL PROPERTY ADMINISTRATION
LEGAL DEPARTMENT - MS BUILDING E
BOX 7599
LOVELAND, CO 80537

COPY MAILED

SEP 27 2007

OFFICE OF PETITIONS

In re Application of	:
Colin Johnstone	:
Application No. 11/418,552	: DECISION GRANTING PETITION
Filed: May 4, 2006	: UNDER 37 CFR 1.313(c)(2)
Attorney Docket No. 30051152-02	:

This is a decision on the petition, filed September 26, 2007, under 37 CFR 1.313(c)(2) to withdraw the above-identified application from issue after payment of the issue fee.

The petition is **GRANTED**.

The above-identified application is withdrawn from issue for consideration of a submission under 37 CFR 1.114 (request for continued examination). See 37 CFR 1.313(c)(2).

Petitioner is advised that the issue fee paid on August 28, 2007 in the above-identified application cannot be refunded. If, however, the above-identified application is again allowed, petitioner may request that it be applied towards the issue fee required by the new Notice of Allowance.[1]

Telephone inquiries should be directed to the undersigned at (571) 272-3218.

This matter is being referred to Technology Center AU 2827 for processing of the request for continued examination under 37 CFR 1.114 and for consideration of the Information Disclosure Statement.

Frances Hicks
Petitions Examiner
Office of Petitions

C:\Documents and Settings\fhicks\My Documents\470\Sept10\418552

---

[1] *The request to apply the issue fee to the new Notice may be satisfied by completing and returning the new Part B – Fee(s) Transmittal Form (along with any balance due at the time of submission). Petitioner is advised that the Issue Fee Transmittal Form **must** be completed and timely submitted to avoid abandonment.*

UNITED STATES PATENT AND TRADEMARK OFFICE

Commissioner for Patents
United States Patent and Trademark Office
P.O. Box 1450
Alexandria, VA 22313-1450
www.uspto.gov

PATTERSON & SHERIDAN LLP
3040 POST OAK BOULEVARD
SUITE 1500
HOUSTON, TX 77056

COPY MAILED
DEC 0 8 2006
OFFICE OF PETITIONS

COPY MAILED
DEC 0 8 2006
OFFICE OF PETITIONS
CANCELLED

In re Application of	:	
Shijian Li et al	:	
Application No. 11/418,557	:	DECISION GRANTING
Filed: May 5, 2006	:	PETITION
Attorney Docket No.	:	
APPM/005765.D1/PPC/CMP/CKIM		

This is a decision on the petitions filed July 24, 2006 and November 17, 2006, requesting that the above-identified application be accorded a filing date of May 5, 2006, rather than the presently accorded date of May 6, 2006. The petition is properly treated as a petition under 37 CFR 1.10(d).

Petitioner requests the earlier filing date on the basis that the application was purportedly deposited with Express Mail Service on May 5, 2006 pursuant to 37 CFR 1.10. While the proffered copy of the Express Mail label receipt No. EV 668244325 US bears a handwritten "date-in" of May 6, 2006, it also includes a USPS receipt date stamp of May 5, 2006. Petitioner is alleging that the date of mailing shown in the "date-in" is a U. S. Postal Service (USPS) error and the correct date of mailing pursuant to 37 CFR 1.10 is May 5, 2006. Additionally, petitioner has presented a copy of the USPS Track & Confirm record, which shows that the Express Mail package in question was accepted at the Houston, TX Post Office on May 5, 2006. The above Express Mail label number also appears on the original application transmittal letter of record in the file.

The evidence presented is convincing that the Express Mail package was entrusted to the USPS on May 5, 2006. Accordingly, this application is entitled to a filing date of May 5, 2006, and has been so accorded.

In view of the above, the petition is **GRANTED**. A corrected filing receipt with the newly accorded filing date of May 5, 2006 has been mailed under separate cover.

Telephone inquiries relating to this decision should be directed to the undersigned at (571) 272-3218.

This application has undergone pre-examination processing and has been referred to Technology Center AU 1765 for examination in due course.

Frances Hicks

Frances Hicks
Petitions Examiner
Office of Petitions

UNITED STATES PATENT AND TRADEMARK OFFICE

COMMISSIONER FOR PATENTS
UNITED STATES PATENT AND TRADEMARK OFFICE
P.O. BOX 1450
ALEXANDRIA, VA 22313-1450
WWW.USPTO.GOV

Paper No. None

EGBERT LAW OFFICES
412 MAIN STREET, 7TH FLOOR
HOUSTON TX 77002

COPY MAILED

DEC 0 4 2006

OFFICE OF PETITIONS

In re Application of :
Felix L. Sorkin :
Application No. 11/418,574 :
Filed: May 5, 2006 :
Attorney Docket No. 1101-202 :
Title: CONCRETE REINFORCING BAR :
SUPPORT WITH BAR RETAINER :
MEMBERS :

DECISION ON PETITION
UNDER 37 C.F.R. §1.182

This is a decision on the petition filed August 1, 2006, requesting that the above-identified application be accorded a filing date of May 5, 2006, with page ten of the specification as part of the original disclosure of the application.

The application was filed on May 5, 2006. However, on June 28, 2006, the Office of Initial Patent Examination mailed a "Notice to File Missing Parts of Nonprovisional Application" (notice) stating that the application had been accorded a filing date of May 5, 2006, and advising applicants that the application appeared to have been deposited without page ten of the specification. The notice further indicated that an oath or declaration was missing.

Receipt of an executed declaration with the present petition is acknowledged.

With this petition, Petitioner alleges that page ten of the specification was included with the original filing on May 5, 2006. In support, Petitioner has set forth that he received a date-stamped postcard, and indicated that a copy of this postcard was included with this petition.

The electronic file has been reviewed, and a copy of this postcard has not been located.

As such, the petition is **DISMISSED**.

Any reply must be submitted within **TWO MONTHS** from the mail date of this decision. Extensions of time under 37 C.F.R. §1.136(a) are permitted. The reply should include a cover letter entitled "Renewed Petition Under 37 C.F.R. 1.182." This is not a final agency action within the meaning of 5 U.S.C 704.

The renewed petition should indicate in a prominent manner that the attorney handling this matter is Paul Shanoski, and may be submitted by mail[1], hand-delivery[2], or facsimile[3].

If responding by mail, Petitioner is advised not to place the undersigned's name on the envelope. Only the information that appears in the footnote should be included - the inclusion of any extraneous information will delay the delivery of the response to the undersigned.

Telephone inquiries regarding *this decision* should be directed to the undersigned at (571) 272-3225[4]. All other inquiries concerning examination procedures or status of the application should be directed to the Technology Center.

Paul Shanoski
Senior Attorney
Office of Petitions
United States Patent and Trademark Office

---

1 Mail Stop Petition, Commissioner for Patents, United States Patent and Trademark Office, P.O. Box 1450, Alexandria, VA, 22313-1450.
2 Customer Window, Randolph Building, 401 Dulaney Street, Alexandria, VA, 22314.
3 (571) 273-8300- please note this is a central facsimile number.
4 Petitioner will note that all practice before the Office should be in writing, and the action of the Office will be based exclusively on the written record in the Office. See 37 C.F.R. §1.2. As such, Petitioner is reminded that no telephone discussion may be controlling or considered authority for Petitioner's further action(s).

UNITED STATES PATENT AND TRADEMARK OFFICE

COMMISSIONER FOR PATENTS
UNITED STATES PATENT AND TRADEMARK OFFICE
P.O. BOX 1450
ALEXANDRIA, VA 22313-1450
WWW.USPTO.GOV

Paper No. None

EGBERT LAW OFFICES
412 MAIN STREET, 7TH FLOOR
HOUSTON TX 77002

COPY MAILED

MAY 08 2007

OFFICE OF PETITIONS

In re Application of	:	
Felix L. Sorkin	:	
Application No. 11/418,574	:	DECISION ON RENEWED PETITION
Filed: May 5, 2006	:	UNDER 37 C.F.R. §1.182
Attorney Docket No. 1101-202	:	
Title: CONCRETE REINFORCING BAR	:	
SUPPORT WITH BAR RETAINER	:	
MEMBERS	:	

This is a decision on the renewed petition filed December 8, 2006, requesting that the above-identified application be accorded a filing date of May 5, 2006, with page ten of the specification as part of the original disclosure of the application.

The application was filed on May 5, 2006. However, on June 28, 2006, the Office of Initial Patent Examination mailed a "Notice to File Missing Parts of Nonprovisional Application" (notice) stating that the application had been accorded a filing date of May 5, 2006, and advising applicants that the application appeared to have been deposited without page ten of the specification.

The original petition was received on August 1, 2006, and was dismissed via the mailing of a decision on December 4, 2006.

Petitioner has alleged that nineteen pages of specification were filed on May 5, 2006, and page ten was among these nineteen

pages. The petition was dismissed since a copy of the date-stamped postcard was not located in the electronic file.

With this renewed petition, Petitioner has provided a copy of this postcard.

The PTO has a well-established and well-publicized practice of providing a receipt for papers filed in the PTO to any applicant desiring a receipt. The practice requires that any paper for which a receipt is desired be filed in the PTO with a self-addressed postcard identifying the paper. A postcard receipt that *itemizes and properly identifies* the papers that are being filed serves as prima facie evidence of receipt in the PTO of all the items listed thereon on the date stamped thereon by the PTO.

MPEP 503 states, *in pertinent part*:

> RETURN POSTCARD
> If a receipt of any item (e.g., paper or fee) filed in the USPTO is desired, it may be obtained by enclosing with the paper a self-addressed postcard specifically identifying the item. The USPTO will stamp the receipt date on the postcard and place it in the outgoing mail. A postcard receipt which itemizes and properly identifies the items which are being filed serves as prima facie evidence of receipt in the USPTO of all the items listed thereon on the date stamped thereon by the USPTO.
> The identifying data on the postcard should be so complete as to clearly identify the item for which receipt is requested. For example, the postcard should identify the applicant's name, application number (if known), confirmation number (if known), filing date, interference number, title of the invention, etc. The postcard should also identify the type of paper being filed, e.g., new application, affidavit, amendment, notice of appeal, appeal brief, drawings, fees, motions, supplemental oath or declaration, petition, etc., and the number of pages being submitted. **If a new application is being filed, all parts of the application being submitted should be separately listed on the postcard, e.g., the number of pages of specification** (including written description, claims and abstract), number of claims, number of sheets of drawings, number of pages of oath/declaration, number of pages of cover sheet (provisional application).
> The postcard receipt will not serve as prima facie evidence of receipt of any item which is not adequately itemized on the postcard. **For example, merely listing on the postcard "a complete application" or "patent application" will not serve as a proper receipt for each of the required components of an application** (e.g., specification (including claims), drawings (if necessary), oath or declaration and the application filing fee) **or missing portions (e.g., pages**, sheets of drawings) of an application **if** one of the components or **portion of a component is found to be missing by the USPTO**. Each separate component should be specifically and properly itemized on the postcard. Furthermore, merely incorporating by reference in the postcard receipt, the

> items listed in a transmittal letter will not serve as prima facie evidence of receipt of those items.
> The person receiving the item(s) in the USPTO will check the listing on the postcard against the item(s) being filed to be sure they are properly identified and that all the items listed on the postcard are presently being submitted to the USPTO. If any of the items listed on the postcard are not being submitted to the USPTO, those items will be crossed off and the postcard initialed by the person receiving the items.
> Upon return of a postcard receipt from the USPTO, the postcard receipt should be promptly reviewed by the person who filed the items to ensure that every item specifically denoted on the postcard was received by the USPTO. If the postcard receipt has been annotated to indicate that a particular item denoted on the postcard was not received by the USPTO, the postcard receipt will not serve as prima facie evidence of receipt of that item in the USPTO.
>
> (Emphasis added).

The postcard has been reviewed by the undersigned. It lists the inclusion of an "enclosed application," along with "2 sheets of drawings showing Figures 1-4; an Oath and Power of Attorney," an "Application Data Sheet and Notice of Nonpublication Request," and a "Credit Card Payment Form." No mention is made of a specification, let alone the inclusion of 19 pages of the same. As set forth above, a postcard cannot serve as prime facie evidence of receipt of an item which has not been adequately itemized thereon.

The postcard does not contain a proper and adequate itemization of the papers which were presented on filing, and therefore, cannot be used to establish that a particular page was presented on filing.

As such, this renewed petition is **DISMISSED**.

It is noted in passing that the seventh numbered paragraph of this renewed petition contains the following text:

> The complete specification is a total of nineteen (19) pages. There is no indication on the post card that an incomplete specification was received by the U.S. Patent and Trademark Office. There is no indication that less than 19 pages were acknowledged as received.

This argument is not persuasive, as it is not relevant to the commonly understood and proper application of the portion of the MPEP reproduced above.

Any reply must be submitted within **TWO MONTHS** from the mail date of this decision. Extensions of time under 37 C.F.R. §1.136(a) are permitted. The reply should include a cover letter entitled "Second Renewed Petition Under 37 C.F.R. 1.182." This is not a final agency action within the meaning of 5 U.S.C 704.

The renewed petition should indicate in a prominent manner that the attorney handling this matter is Paul Shanoski, and may be submitted by mail[1], hand-delivery[2], or facsimile[3].

If responding by mail, Petitioner is advised not to place the undersigned's name on the envelope. Only the information that appears in the footnote should be included - the inclusion of any extraneous information will delay the delivery of the response to the undersigned.

Telephone inquiries regarding *this decision* should be directed to the undersigned at (571) 272-3225[4]. All other inquiries concerning examination procedures or status of the application should be directed to the Technology Center.

Paul Shanoski
Senior Attorney
Office of Petitions
United States Patent and Trademark Office

1 Mail Stop Petition, Commissioner for Patents, United States Patent and Trademark Office, P.O. Box 1450, Alexandria, VA, 22313-1450.
2 Customer Window, Randolph Building, 401 Dulaney Street, Alexandria, VA, 22314.
3 (571) 273-8300- please note this is a central facsimile number.
4 Petitioner will note that all practice before the Office should be in writing, and the action of the Office will be based exclusively on the written record in the Office. See 37 C.F.R. §1.2. As such, Petitioner is reminded that no telephone discussion may be controlling or considered authority for Petitioner's further action(s).

UNITED STATES PATENT AND TRADEMARK OFFICE

COMMISSIONER FOR PATENTS
UNITED STATES PATENT AND TRADEMARK OFFICE
P.O. BOX 1450
ALEXANDRIA, VA 22313-1450
WWW.USPTO.GOV

Paper No. None

EGBERT LAW OFFICES
412 MAIN STREET, 7TH FLOOR
HOUSTON TX 77002

COPY MAILED

JUN 25 2007

OFFICE OF PETITIONS

In re Application of	:	
Felix L. Sorkin	:	
Application No. 11/418,574	:	DECISION ON SECOND RENEWED
Filed: May 5, 2006	:	PETITION UNDER
Attorney Docket No. 1101-202	:	37 C.F.R. §1.182
Title: CONCRETE REINFORCING BAR	:	
SUPPORT WITH BAR RETAINER	:	
MEMBERS	:	

This is a decision on the second renewed petition filed May 15, 2007, requesting that the above-identified application be accorded a filing date of August 1, 2006, with page ten of the specification as part of the disclosure of the application.

The application was deposited on May 5, 2006. However, on June 28, 2006, the Office of Initial Patent Examination mailed a "Notice to File Missing Parts of Nonprovisional Application" (notice) stating that the application had been accorded a filing date of May 5, 2006, and advising applicants that the application appeared to have been deposited without page ten of the specification.

An original petition was received on August 1, 2006, and was dismissed via the mailing of a decision on December 4, 2006. A copy of page 10 of the specification was included with the original petition.

The renewed petition was filed on December 8, 2006, and was dismissed via the mailing of a decision on May 15, 2007.

On May 15, 2007, Petitioner submitted this second renewed petition. In the petition, the following text appears:

> Applicant respectfully requests that the Official Filing Date be amended to reflect the date of receipt of Page 10 on August 1, 2006.

Based on this text, it is clear that Petitioner accepts the date of deposit of the formerly omitted page, August 1, 2006, as the filing date.

Receipt is acknowledged of the supplemental declaration which Petitioner has submitted along with this petition, as required by the notice of June 28, 2006. The supplemental declaration is merely a copy of the declaration which was originally presented on filing, with an amended portion that makes reference to page 10 of the specification. This amended portion has been initialed by an unknown party (presumably the inventor, however the initials are not legible), but has not been dated. Consequently, this amended declaration cannot be accepted. See 37 C.F.R. §1.52(c)(1) and MPEP 605.04(a).

It follows that the present second renewed petition must be **DISMISSED**.

The filing date has not been changed.

Page 10 of the specification has not been entered into the record.

Any reply must be submitted within **TWO MONTHS** from the mail date of this decision. Extensions of time under 37 C.F.R. §1.136(a) are permitted. The reply should include a cover letter entitled "Third Renewed Petition Under 37 C.F.R. §1.47(a)". This is not a final agency action within the meaning of 5 U.S.C §704.

On third renewed petition, Petitioner should have the inventor execute a newly-prepared declaration which makes reference to the inclusion of page 10 of the specification

The third renewed petition should indicate in a prominent manner that the attorney handling this matter is Paul Shanoski, and may be submitted by mail[1], hand-delivery[2], or facsimile[3].

---

1 Mail Stop Petition, Commissioner for Patents, United States Patent and Trademark Office, P.O. Box 1450, Alexandria, VA, 22313-1450.
2 Customer Window, Randolph Building, 401 Dulaney Street, Alexandria, VA, 22314.
3 (571) 273-8300- please note this is a central facsimile number.

If responding by mail, Petitioner is advised not to place the undersigned's name on the envelope. Only the information that appears in the footnote should be included - adding anything else to the address will delay the delivery of the response to the undersigned.

Telephone inquiries regarding *this decision* should be directed to the undersigned at (571) 272-3225[4]. All other inquiries concerning examination procedures or status of the application should be directed to the Technology Center.

Paul Shanoski
Senior Attorney
Office of Petitions
United States Patent and Trademark Office

---

4 Petitioner will note that all practice before the Office should be in writing, and the action of the Office will be based exclusively on the written record in the Office. See 37 C.F.R. §1.2. As such, Petitioner is reminded that no telephone discussion may be controlling or considered authority for any further action(s) of Petitioner.

UNITED STATES PATENT AND TRADEMARK OFFICE

COMMISSIONER FOR PATENTS
UNITED STATES PATENT AND TRADEMARK OFFICE
P.O. BOX 1450
ALEXANDRIA, VA 22313-1450
WWW.USPTO.GOV

Paper No. None

EGBERT LAW OFFICES
412 MAIN STREET, 7TH FLOOR
HOUSTON TX 77002

COPY MAILED

JUL 23 2007

OFFICE OF PETITIONS

In re Application of	:	
Felix L. Sorkin	:	
Application No. 11/418,574	:	DECISION ON THIRD RENEWED
Filed: May 5, 2006	:	PETITION UNDER
Attorney Docket No. 1101-202	:	37 C.F.R. §1.182
Title: CONCRETE REINFORCING BAR	:	
SUPPORT WITH BAR RETAINER	:	
MEMBERS	:	

This is a decision on the third renewed petition filed July 3, 2007, requesting that the above-identified application be accorded a filing date of August 1, 2006, with page ten of the specification as part of the disclosure of the application.

The application was deposited on May 5, 2006. However, on June 28, 2006, the Office of Initial Patent Examination mailed a "Notice to File Missing Parts of Nonprovisional Application" (notice) stating that the application had been accorded a filing date of May 5, 2006, and advising applicants that the application appeared to have been deposited without page ten of the specification.

An original petition was received on August 1, 2006, and was dismissed via the mailing of a decision on December 4, 2006. A copy of page 10 of the specification was included with the original petition.

A renewed petition was filed on December 8, 2006, and was dismissed via the mailing of a decision on May 15, 2007.

A second renewed petition was filed on May 15, 2007, and was dismissed via the mailing of a decision on June 25, 2007. The second renewed petition of May 15, 2007 contained the following text:

> Applicant respectfully requests that the Official Filing Date be amended to reflect the date of receipt of Page 10 on August 1, 2006.

Based on this text, it is clear that Petitioner accepts the date of deposit of the formerly omitted page, August 1, 2006, as the filing date.

With this third renewed petition, Petitioner has submitted an acceptable supplemental declaration.

It follows that this third renewed petition is **GRANTED**.

The Office of Initial Patent Examination will be advised to process this application with a **filing date of August 1, 2006**, the date of receipt of the formerly omitted item, page 10 of the specification, using the original application papers deposited on May 5, 2006, as well as page 10 of the specification, submitted with the original petition on August 1, 2006. **OIPE will then mail a corrected filing receipt**.

The general phone number for OIPE is 571-272-4000. Telephone inquiries regarding this decision should be directed to the undersigned at (571) 272-3225.

Paul Shanoski
Senior Attorney
Office of Petitions
United States Patent and Trademark Office

Amendments to the Claims:

Claims 1-96 (Canceled).

97. (Previously Presented): Integrated circuitry comprising:

a semiconductor substrate comprising at least one vertically oriented field effect transistor comprising a pair of source/drain regions having a channel region received therebetween, a gate received operably proximate the channel region, the channel region comprising epitaxial silicon, the epitaxial silicon comprising at least one of carbon, germanium, and oxygen; said at least one being present at a total concentration of no greater than 1 atomic percent.

98. (Previously Presented): The integrated circuitry of claim 97 wherein said at least one is present at a total concentration of no greater than 0.01 atomic percent.

99. (Previously Presented): The integrated circuitry of claim 98 wherein said at least one is present at a total concentration of no greater than 0.001 atomic percent.

100. (Previously Presented): The integrated circuitry of claim 97 wherein said at least one is present at a total concentration of from 1×10^{10} atoms/cm^3 to 1×10^{16} atoms/cm^3.

5

~~101~~. (Previously Presented): The integrated circuitry of claim 1~~01~~4 wherein said at least one is present at a total concentration of from 1×10^{10} atoms/cm^3 to 1×10^{14} atoms/cm^3.

102. (Previously Presented): The integrated circuitry of claim 97 wherein the at least one comprises carbon.

103. (Previously Presented): The integrated circuitry of claim 97 wherein the at least one comprises germanium.

104. (Currently Amended): ~~The integrated circuitry of claim 97 wherein the at least one comprises~~ Integrated circuitry comprising:

a semiconductor substrate comprising at least one vertically oriented field effect transistor comprising a pair of source/drain regions having a channel region received therebetween, a gate received operably proximate the channel region, the channel region comprising epitaxial silicon, the epitaxial silicon comprising oxygen present at a total concentration of no greater than 1 atomic percent.

105. (Currently Amended): ~~The integrated circuitry of claim 97 wherein the epitaxial silicon comprises~~ Integrated circuitry comprising:

a semiconductor substrate comprising at least one vertically oriented field effect transistor comprising a pair of source/drain regions having a channel region received therebetween, a gate received operably proximate the channel region, the channel region comprising epitaxial silicon, the epitaxial silicon comprising at least two of carbon, germanium, and ~~oxygen; and~~ oxygen present at a total concentration of no greater than 1 atomic percent.

106. (Currently Amended): ~~The integrated circuitry of claim 105 wherein the epitaxial silicon comprises all three of~~ Integrated circuitry comprising:

a semiconductor substrate comprising at least one vertically oriented field effect transistor comprising a pair of source/drain regions having a channel region received therebetween, a gate received operably proximate the channel region, the channel region comprising epitaxial silicon, the epitaxial silicon comprising carbon, germanium, and ~~oxygen; and~~ oxygen present at a total concentration of no greater than 1 atomic percent.

107. (Previously Presented): The integrated circuitry of claim 97 wherein the semiconductor substrate comprises bulk monocrystalline silicon.

108. (Previously Presented): The integrated circuitry of claim 97 wherein the at least one is provided homogeneously within the channel region.

109. (Previously Presented): The integrated circuitry of claim 97 wherein the at least one is not provided homogeneously within the channel region.

110. (Withdrawn): Integrated circuitry comprising:

a semiconductor substrate comprising at least one vertically oriented field effect transistor comprising a pair of source/drain regions having a channel region received therebetween, a gate received operably proximate the channel region, the channel region comprising an epitaxial silicon germanium alloy comprising at least 1 atomic percent germanium, the silicon germanium alloy comprising at least one of carbon and oxygen, said at least one being present at a total concentration of no greater than 1 atomic percent.

111. (Withdrawn): The integrated circuitry of claim 110 wherein said at least one is present at a total concentration of no greater than 0.01 atomic percent.

112. (Withdrawn): The integrated circuitry of claim 111 wherein said at least one is present at a total concentration of no greater than 0.001 atomic percent.

113. (Withdrawn): The integrated circuitry of claim 110 wherein said at least one is present at a total concentration of from 1×10^{10} atoms/cm^3 to 1×10^{16} atoms/cm^3.

114. (Withdrawn): The integrated circuitry of claim 113 wherein said at least one is present at a total concentration of from 1×10^{10} atoms/cm^3 to 1×10^{14} atoms/cm^3.

115. (Withdrawn): The method of claim 110 wherein the silicon germanium alloy comprises from 5 atomic percent to 30 atomic percent germanium.

116. (Withdrawn): Integrated circuitry comprising:

a semiconductor substrate comprising at least one field effect transistor comprising a pair of source/drain regions having a channel region received therebetween, a gate received operably proximate the channel region, the channel region comprising epitaxial silicon, the epitaxial silicon comprising at least carbon and germanium present at a total concentration of no greater than 1 atomic percent.

117. (Withdrawn): The integrated circuitry of claim 116 wherein the carbon and germanium are present at a total concentration of no greater than 0.01 atomic percent.

118. (Withdrawn): The integrated circuitry of claim 117 wherein the carbon and germanium are present at a total concentration of no greater than 0.001 atomic percent.

119. (Withdrawn): The integrated circuitry of claim 116 wherein the carbon and germanium are present at a total concentration of from 1×10^{10} atoms/cm^3 to 1×10^{16} atoms/cm^3.

120. (Withdrawn): The integrated circuitry of claim 119 wherein the carbon and germanium are present at a total concentration of from 1×10^{10} atoms/cm^3 to 1×10^{14} atoms/cm^3.

121. (Withdrawn): A field effect transistor comprising a pair of source/drain regions having a channel region received therebetween, a gate received operably proximate the channel region, the channel region comprising epitaxial silicon, the epitaxial silicon comprising carbon, germanium, and oxygen present at a total concentration of no greater than 1 atomic percent.

122. (Withdrawn): The integrated circuitry of claim 121 wherein the carbon, germanium, and oxygen are present at a total concentration of no greater than 0.01 atomic percent.

123. (Withdrawn): The integrated circuitry of claim 122 wherein the carbon, germanium, and oxygen are present at a total concentration of no greater than 0.001 atomic percent.

124. (Withdrawn): The integrated circuitry of claim 121 wherein the carbon, germanium, and oxygen are present at a total concentration of from 1×10^{10} atoms/cm^3 to 1×10^{16} atoms/cm^3.

125. (Withdrawn): The integrated circuitry of claim 124 wherein the carbon, germanium, and oxygen are present at a total concentration of from 1×10^{10} atoms/cm^3 to 1×10^{14} atoms/cm^3.

UNITED STATES PATENT AND TRADEMARK OFFICE

Commissioner for Patents
United States Patent and Trademark Office
P.O. Box 1450
Alexandria, VA 22313-1450
www.uspto.gov

Howard IP Law Group
P.O. Box 226
Fort Washington, PA 19034

COPY MAILED

MAY 12 2008

In re Application of	:	
Anthony D. Kurtz, et al.	:	
Application No. 11/418,653	:	DECISION ON PETITION
Filed: May 5, 2006	:	TO WITHDRAW
Attorney Docket No.	:	FROM RECORD
	:	

This is a decision on the Request to Withdraw as attorney or agent of record under 37 C.F.R. § 1.36(b), filed January 10, 2008.

The request is **APPROVED**.

A grantable request to withdraw as attorney/agent of record must be signed by every attorney/agent seeking to withdraw or contain a clear indication that one attorney is signing on behalf of another/others. A request to withdraw will not be approved unless at least 30 (thirty) days would remain between the date of approval and the later of the expiration date of a time to file a response or the expiration date of the maximum time period which can be extended under 37 C.F.R. § 1.136(a).

The request was signed by Edward J. Howard on behalf of all attorneys of record. All attorneys/agents have been withdrawn. Applicant is reminded that there is no attorney of record at this time.

The request to change the correspondence of record is not acceptable as the requested correspondence address is not that of: (1) the first named signing inventor; or (2) an intervening assignee of the entire interest under 37 C.F.R 3.71. All future communications from the Office will be directed to the first named signing inventor at the first copied address below until otherwise properly notified by the applicant.

There is no outstanding Office action at this time.

Telephone inquiries concerning this decision should be directed to Terri Williams at 571-272-2991.

Terri Williams
Petitions Examiner
Office of Petitions

cc: **Anthony D. Kurtz**
136 East Saddle River Road
Saddle River, NJ 07458

cc: **The Pievy Law Firm**
10 Rutgers Place
Trenton, NJ 08618

UNITED STATES PATENT AND TRADEMARK OFFICE

UNITED STATES DEPARTMENT OF COMMERCE
United States Patent and Trademark Office
Address: COMMISSIONER FOR PATENTS
P.O. Box 1450
Alexandria, Virginia 22313-1450
www.uspto.gov

APPLICATION NUMBER	FILING OR 371(C) DATE	FIRST NAMED APPLICANT	ATTY. DOCKET NO./TITLE
11/418,653	05/05/2006	Anthony D. Kurtz	

CONFIRMATION NO. 1232

POWER OF ATTORNEY NOTICE

45722
Howard IP Law Group
P.O. Box 226
Fort Washington, PA 19034

OC000000029885405

Date Mailed: 05/12/2008

NOTICE REGARDING CHANGE OF POWER OF ATTORNEY

This is in response to the Power of Attorney filed 01/10/2008.

- The withdrawal as attorney in this application has been accepted. Future correspondence will be mailed to the new address of record. 37 CFR 1.33.

/tswilliams/

Office of Data Management, Application Assistance Unit (571) 272-4000, or (571) 272-4200, or 1-888-786-0101

UNITED STATES PATENT AND TRADEMARK OFFICE

Commissioner for Patents
United States Patent and Trademark Office
P.O. Box 1450
Alexandria, VA 22313-1450
www.uspto.gov

JEFFREY L. WENDT
PRAMUDJI WENDT & TRAN, LLP
1800 BERING DRIVE, SUITE 540
HOUSTON TX 77057

MAILED

JUN 23 2009

OFFICE OF PETITIONS

In re Application of	:	
Marita Gardner-Anopol	:	DECISION ON PETITION
Application No. 11/418,671	:	TO WITHDRAW
Filed: May 5, 2006	:	FROM RECORD
Attorney Docket No.124-P001US	:	

This is a decision on the Request to Withdraw as attorney or agent of record under 37 C.F.R. § 1.36(b), filed May 19, 2009.

The request is **APPROVED**.

A grantable request to withdraw as attorney/agent of record must be signed by every attorney/agent seeking to withdraw or contain a clear indication that one attorney is signing on behalf of another/others. The Office will require the practitioner(s) to certify that he, she or they have: (1) given reasonable notice to the client, prior to the expiration of the reply period, which the practitioner(s) intends to withdraw from employment; (2) delivered to the client or a duly authorized representative of the client all papers and property (including funds) to which the client is entitled; and (3) notified the client of any replies that may be due and the time frame within which the client must respond, pursuant to 37 CFR 10.40 (c).

The request was signed by Jeffrey L. Wendt on behalf of himself as attorney of record.

Mr. Jeffrey L. Wendt has been withdrawn as attorney of record. Applicant is reminded that there is no attorney of record at this time.

All future correspondence will be directed to the first named inventor at the address indicated below.

Currently, there is an outstanding Office action mailed January 21, 2009 that requires a reply.

Telephone inquires concerning this decision should be directed to Petitions Examiner Joan Olszewski at (571) 272-7751. All other inquires concerning either the examination or status of the application should be directed to the Technology Center.

/Liana Walsh/
Liana Walsh
Petitions Examiner
Office of Petitions

cc: Marita Gardner-Anopol
4433 Town Center Place
Kingwood TX 77339

UNITED STATES PATENT AND TRADEMARK OFFICE

UNITED STATES DEPARTMENT OF COMMERCE
United States Patent and Trademark Office
Address: COMMISSIONER FOR PATENTS
P.O. Box 1450
Alexandria, Virginia 22313-1450
www.uspto.gov

EDELL, SHAPIRO & FINNAN, LLC
1901 RESEARCH BOULEVARD
SUITE 400
ROCKVILLE, MD 20850

Mail Date: 04/20/2010

Applicant	: Steve Dunham	: DECISION ON REQUEST FOR
Patent Number	: 7654879	: RECALCULATION of PATENT
Issue Date	: 02/02/2010	: TERM ADJUSTMENT IN VIEW
Appliction No	: 11/418,682	: OF WYETH AND NOTICE OF INTENT TO
Filed	: 05/04/2006	: ISSUE CERTIFICATE OF CORRECTION
		:

The Request for Recalculation is **GRANTED** to the extent indicated.

The patent term adjustment has been determined to be **436** days. The USPTO will *sua sponte* issue a certificate of correction reflecting the amount of PTA days determined by the recalculation.

Prior to the issuance of the certificate of correction, the USPTO will afford patentee an opportunity to be heard and request reconsideration. Accordingly, patentee has **one month or thirty (30) days**, whichever is longer, to file a request for reconsideration of this patent term adjustment calculation. See 35 U.S.C. 154(b)(3)(B)(ii) and 37 CFR 1.322(a)(4). No extensions of time will be granted under 37 CFR 1.136.

Patentee should use document code PET.OP if electronically filing a request for reconsideration of this patent term adjustment calculation. The patentee must also include the information required by 37 CFR 1.705(b)(2) and the fee required by 37 CFR 1.18(e). If patentee does not file a timely request for reconsideration of this patent term adjustment calculation including the information required by 37 CFR 1.705(b)(2) and the fee required by 37 CFR 1.18(e), the USPTO will issue a certificate of correction reflecting the PTA determination noted above.

Patentee should be aware that in order to preserve the right to review in the United States District Court for the District of Columbia of the USPTO patent term adjustment determination, patentee must ensure that he or she also take the steps required under 35 U.S.C. 154(b)(4)(A) in a timely manner. Nothing in the request for recalculation should be construed as providing an alternative time frame for commencing a civil action under 35 U.S.C. 154(b)(4)(A).

Any questions concerning this decision should be directed to the Office of Patent Legal Administration at 571-272-7702.

UNITED STATES PATENT AND TRADEMARK OFFICE

Commissioner for Patents
United States Patent and Trademark Office
P.O. Box 1450
Alexandria, VA 22313-1450
www.uspto.gov

ROSETTA-GENOMICS
c/o PSWS
700 W. 47TH STREET, SUITE 1000
KANSAS CITY MO 64112

COPY MAILED

JUL 12 2006

OFFICE OF PETITIONS

In re Application of :
Bentwich, Itzhak :
Application No. 11/418,718 : ON PETITION
Filed: May 4, 2006 :
Attorney Docket No. 050992-109680 :

This is a decision on the petition under 37 CFR 1.102(d), filed on May 25, 2006, to make the above-identified application special based on developing treatments and cures for HIV/AIDS or cancer as set forth in M.P.E.P. § 708.02, Section X.

The petition is **GRANTED**.

A grantable petition to make an application special under 37 CFR 1.102(d) and MPEP § 708.02, Section X: Inventions Relating to HIV/AIDS or cancer, must be accompanied by (1) the petition fee under 37 CFR 1.17(h); and (2) a satisfactory statement explaining how the invention contributes to the diagnosis, treatment or prevention of HIV/AIDS or cancer.

The instant petition includes a statement, which satisfies the above requirements. Accordingly, the above-identified application has been accorded "special" status.

The address given on the petition differs from the address of record. If appropriate, a request to change the address of record should be filed. A courtesy copy of this decision is being mailed to the address given on the petition; however, the Office will mail all future correspondence solely to the address of record.

Telephone inquiries concerning this decision should be directed to Petitions Examiner Liana Chase at 571-272-3206. All other inquiries concerning either the examination or status of the application should be directed to the Technology Center.

The application is being forwarded to the Technology Center Art Unit 1642 for action on the merits commensurate with this decision.

David Buccl
Petitions Examiner
Office of Petitions

Cc:

POLSINELLI SHALTON WELTE SUELTHAUS PC
180 N. STETSON AVE., SUITE 4525
CHICAGO, IL 60601

SPE RESPONSE FOR CERTIFICATE OF CORRECTION

Paper No.:20080917

DATE : September 17, 2008

TO SPE OF : ART UNIT 3767

SUBJECT : Request for Certificate of Correction on Patent No.: 7,314,463

A response is requested with respect to the accompanying request for a certificate of correction.

Please complete this form and return with file, within **7** days to:
Certificates of Correction Branch - ST (South Tower) 9A22
Palm location **7590** - Tel. No. (703) 305-8309

With respect to the change(s) requested, correcting Office and/or Applicant's errors, should the patent read as shown in the certificate of correction? No new matter should be introduced, nor should the scope or meaning of the claims be changed.

Thank You For Your Assistance **Certificates of Correction Branch**

The request for issuing the above-identified correction(s) is hereby:

Note your decision on the appropriated box.

☐ **Approved** All changes apply.

☒ **Approved in Part** Specify below which changes **do not** apply.

☐ **Denied** State the reasons for denial below.

Comments:

At column 14, ln 34, in claim 8 (not claim 18 as recited in Certificate of Correction form), delete "comprising." and insert -- comprising: -- therefor.

All other changes apply.

KEVIN C. SIRMONS
SUPERVISORY PATENT EXAMINER

/Andrew M. Gilbert/
Examiner 3767

UNITED STATES PATENT AND TRADEMARK OFFICE
CERTIFICATE OF CORRECTION

PATENT NO. : 7,314,463
APPLICATION NO. : 11/418,725
ISSUE DATE : January 1, 2008
INVENTOR : Thomas F. Fangrow, Jr.

It is certified that errors appear in the above-identified patent and that said Letters Patent is hereby corrected as shown below:

On page 1, column 1, under "U.S. Patent Documents", please insert - - 3,964, 470 06/1976 Trombley - -.

On page 2, column 1, line 46, under "U.S. Patent Documents", please delete "5,964,470 A 10/1999 Syendsen et al."

On page 2, column 2, line 32, under "U.S. Patent Documents", please delete "Funderbunk et al." and insert - - Funderburk et al. - -, therefor.

On page 2, column 2, line 46, under "U.S. Patent Documents", please delete "Foust et al." and insert - -Faust et al. - -, therefor.

On page 3, column 2, line 9, under "Other Publications", please delete "May 30, 2006," and insert - -May 03, 2006, - -, therefor.

At column 3, line 44, delete "c avity" and insert - - cavity - -, therefor.

At column 14, line 34, in Claim 18, delete "comprising." and insert - - comprising: - -, therefor.

In Figure 13, please replace component designation "140" with component designation - - 40 - -, as shown in the replacement Figure 13 on the following page:

MAILING ADDRESS OF SENDER:

Paul N. Conover
KNOBBE, MARTENS, OLSON & BEAR, LLP
2040 Main Street, 14th Floor
Irvine, California 92614

DOCKET NO. ICUMM.183C1

UNITED STATES PATENT AND TRADEMARK OFFICE
CERTIFICATE OF CORRECTION

PATENT NO. : 7,314,463
APPLICATION NO. : 11/418,725
ISSUE DATE : January 1, 2008
INVENTOR : Thomas F. Fangrow, Jr.

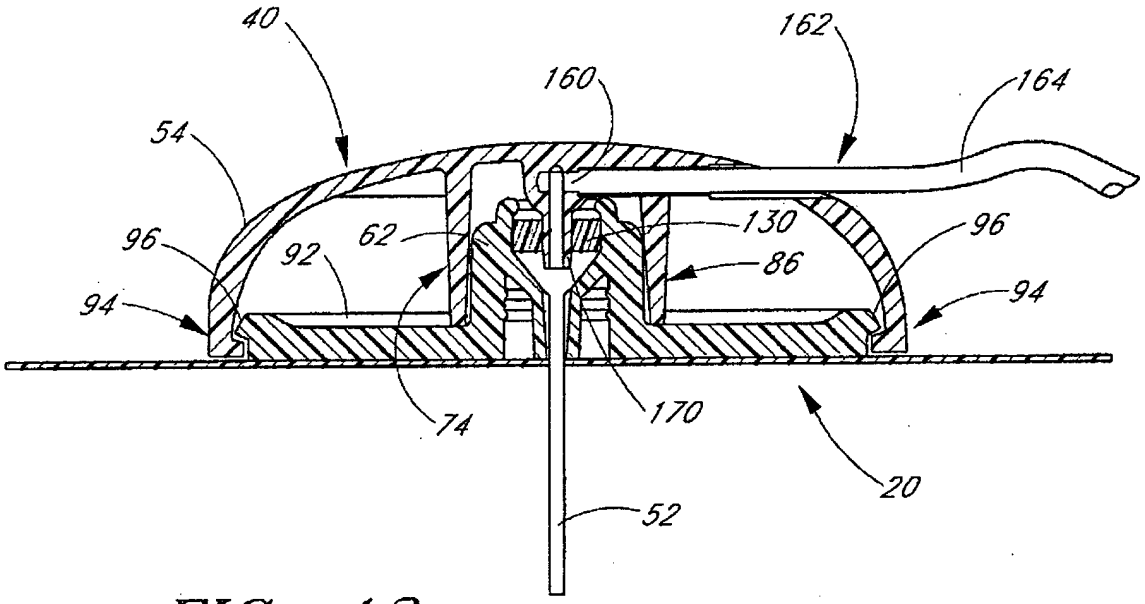

FIG. 13

5573945/062508

MAILING ADDRESS OF SENDER:

Paul N. Conover
KNOBBE, MARTENS, OLSON & BEAR, LLP
2040 Main Street, 14th Floor
Irvine, California 92614

DOCKET NO. ICUMM.183C1

PTO/SB/44 Equivalent

UNITED STATES PATENT AND TRADEMARK OFFICE

Commissioner for Patents
United States Patent and Trademark Office
P.O. Box 1450
Alexandria, VA 22313-1450
www.uspto.gov

MCANDREWS, HELD & MALLOY, LTD
500 WEST MADISON STREET
SUITE 3400
CHICAGO, IL 60661

COPY MAILED

SEP 2 4 2007

OFFICE OF PETITIONS

In re Application of

Chenniah Nanjundiah, et al.
Application No. 11/418,741
Filed: May 4, 2006
Attorney Docket No. 1756US01

DECISION ON PETITION
TO MAKE SPECIAL UNDER
37 CFR 1.102(c)(1)

This is a decision on the petition under 37 CFR 1.102(c)(1), filed September 12, 2007, to make the above-identified application special based on applicant's age as set forth in M.P.E.P. § 708.02, Section IV.

The petition is **GRANTED**.

A grantable petition to make an application special under 37 CFR 1.102(c)(1) and MPEP § 708.02, Section IV: Applicant's Age must be accompanied by evidence showing that at least one of the applicants is 65 years of age, or more, such as a birth certificate or a statement by applicant. No fee is required

The instant petition includes a declaration statement signed by applicant Larry L. Hawn. Accordingly, the above-identified application has been accorded "special" status.

Telephone inquiries concerning this decision should be directed to undersigned at 571-272-1642.

All other inquiries concerning either the examination or status of the application should be directed to the Technology Center.

The application is being forwarded to the Technology Center Art Unit 1753 for action on the merits commensurate with this decision.

April M. Wise
Petitions Examiner
Office of Petitions

UNITED STATES PATENT AND TRADEMARK OFFICE

Commissioner for Patents
United States Patent and Trademark Office
P.O. Box 1450
Alexandria, VA 22313-1450
www.uspto.gov

AT & T Legal Department - BHGL
Attn: Patent Docketing Room 2A-207
One AT&T Way
Bedminster NJ 07921

COPY MAILED

DEC 07 2009

OFFICE OF PETITIONS

In re Application of	:	
Teresa Farias Latter	:	
Application No. 11/418,742	:	DECISION ON
Filed: May 4, 2006	:	PETITION TO WITHDRAW
Attorney Docket No. 8285/840	:	FROM RECORD
	:	

This is a decision on the Request to Withdraw as attorney or agent of record under 37 C.F.R. § 1.36(b), filed October 5, 2009.

The request is **NOT APPROVED**.

A review of the file record indicates that Scott W. Brim does not have power of attorney in this patent application. Accordingly, the request to withdraw under 37 C.F.R. § 1.36(b) is not applicable.

According to the oath and declaration filed May 4, 2006 Mr. Scott W. Brim was appointed as an attorney of record in this application.

All future communications from the Office will continue to be directed to the above-listed address until otherwise properly notified by the applicant.

Telephone inquires concerning this decision should be directed to Kimberly Inabinet at 571-272-4618.

/Kimberly Inabinet/

Kimberly Inabinet
Petitions Examiner
Office of Petitions

UNITED STATES PATENT AND TRADEMARK OFFICE

COMMISSIONER FOR PATENTS
UNITED STATES PATENT AND TRADEMARK OFFICE
P.O. BOX 1450
ALEXANDRIA, VA 22313-1450
WWW.USPTO.GOV

Paper No. None

Patrick S. Yoder
FLETCHER YODER
P.O. Box 692289
Houston TX 77269-2289

COPY MAILED
SEP 22 2006
OFFICE OF PETITIONS

In re Application of Patricia Chapman Irwin et al. Application No. 11/418,763 Filed: May 5, 2006 Attorney Docket No.: 195952-1/YOD (GERD:0670) Title: HIGH TEMPERATURE CAPACITORS AND METHOD OF MANUFACTURING THE SAME	DECISION ON PETITION UNDER 37 C.F.R. §1.182

This is a decision on the petition filed July 3, 2006, requesting that the above-identified application, including Figure 6, be accorded a filing date of May 5, 2006 as part of the original disclosure.

The application was deposited on May 5, 2006. However, on June 5, 2006, the Office of Initial Patent Examination (OIPE) mailed a "Notice of Omitted Item(s) in a Nonprovisional Application" (notice), stating that the application had been accorded a filing date, and advising applicants that it appeared as though Figure 6 had been omitted. The notice set a two-month period of reply.

In response, on July 3, 2006, applicants filed the present petition. The petition is further accompanied by a copy of Figure 6, along with a copy of applicants' postcard receipt acknowledging receipt of "Drawings: 4 Sheets" in the United States Patent and Trademark Office (Office) on May 5, 2006. Applicants request that Figure 6 be accorded a filing date of May 5, 2006.

Upon review of the electronic file, three sheets of drawings containing Figures one through five have been located among the application papers. A fourth page of drawings containing Figure six has not been located in the electronic file. However, the evidence is convincing that the application papers deposited on May 5, 2006 included Figure six, and the sheet containing this figure was subsequently misplaced in the Office.

Therefore, the application, including Figure 6, was complete on filing and entitled to a filing date of May 5, 2006 as part of the original disclosure.

Accordingly, the petition under 37 C.F.R. §1.182 is **GRANTED**.

The notice mailed June 5, 2006 was sent in error, and is hereby **VACATED**. Therefore, no petition fee is necessary, and the petition fee will be refunded to Petitioner's Deposit Account in due course.

OIPE will be advised to process the application with a filing date of May 5, 2006, using the original application papers filed on that date, as well as Figure six submitted on July 3, 2006, and for noting in Office records that the sheet containing this figure was present on filing.

Telephone inquiries regarding this decision should be directed to the undersigned at (571) 272-3225. All other inquiries concerning examination procedures or status of the application should be directed to the Technology Center.

Paul Shanoski

Paul Shanoski
Senior Attorney
Office of Petitions
United States Patent and Trademark Office

UNITED STATES PATENT AND TRADEMARK OFFICE

Commissioner for Patents
United States Patent and Trademark Office
P.O. Box 1450
Alexandria, VA 22313-1450
www.uspto.gov

ABELMAN, FRAYNE & SCHWAB
666 THIRD AVENUE, 10TH FLOOR
NEW YORK, NY 10017

MAILED

MAY 25 2010

OFFICE OF PETITIONS

In re Application of
Thomas Stuart RICHIE
Application No. 11/418,789
Filed: May 5, 2006
Attorney Docket No. **207,582**

DECISION ON PETITION
UNDER 37 CFR 1.137(b)

This is a decision on the petition under the unintentional provisions of 37 CFR 1.137(b), filed September 21, 2009, to revive the above-identified application.

The petition is **GRANTED**.

The application became abandoned for failure to reply in a timely manner to the non-final Office action mailed, June 26, 2008, which set a shortened statutory period for reply of three (3) months. No extensions of time under the provisions of 37 CFR 1.136(a) were obtained. Accordingly, the application became abandoned on September 27, 2008.

It is not apparent whether the person signing the statement of unintentional delay was in a position to have firsthand or direct knowledge of the facts and circumstances of the delay at issue. Nevertheless, such statement is being treated as having been made as the result of a reasonable inquiry into the facts and circumstances of such delay. See 37 CFR 10.18(b) and Changes to Patent Practice and Procedure; Final Rule Notice, 62 Fed. Reg. 53131, 53178 (October 10, 1997), 1203 Off. Gaz. Pat. Office 63, 103 (October 21, 1997). In the event that such an inquiry has not been made, petitioner must make such an inquiry. If such inquiry results in the discovery that it is not correct that the entire delay in filing the required reply from the due date for the reply until the filing of a grantable petition pursuant to 37 CFR 1.137(b) was unintentional, petitioner must notify the Office.

There is no indication that the person signing the petition was ever given a power of attorney to prosecute the application. If the person signing the petition desires to receive future correspondence regarding this application, the appropriate power of attorney document must be submitted.

The petition satisfies the requirements of 37 CFR 1.137(b) in that petitioner has supplied (1) the reply in the form of an amendment, (2) the petition fee of $1620; and (3) an adequate statement of unintentional delay.

Telephone inquiries concerning this decision should be directed to the undersigned at (571) 272-7253.

This application is being referred to Technology Center AU 2831 for appropriate action by the Examiner in the normal course of business on the reply received September 21, 2009.

Thurman K. Page
Petitions Examiner
Office of Petitions

UNITED STATES PATENT AND TRADEMARK OFFICE

Commissioner for Patents
United States Patent and Trademark Office
P.O. Box 1450
Alexandria, VA 22313-1450
www.uspto.gov

ABELMAN, FRAYNE & SCHWAB
666 THIRD AVENUE, 10TH FLOOR
NEW YORK, NY 10017

COPY MAILED

MAY 19 2008

OFFICE OF PETITIONS

In re Application of	:	
Yossi Gross	:	
Application No. 11/418,790	:	DECISION ON PETITION
Filed: May 5, 2006	:	UNDER 37 CFR 1.78(a)(6)
Attorney Docket No. 207,583	:	

This is a decision on the petition under 37 CFR 1.78(a)(6), filed December 7, 2007, to accept an unintentionally delayed claim under 35 U.S.C. §119(e) for the benefit of the prior-filed provisional application set forth in the concurrently filed amendment.

It is not apparent whether the statement of unintentional delay was signed by a person who would have been in a position of knowing that the entire delay between the date the claim was due under 37 CFR § 1.78(a)(5)(ii) and the date the claim was filed was unintentional. Nevertheless, in accordance with 37 CFR 10.18, the statement is accepted as constituting a certification of unintentional delay. However, in the event that petitioner has no knowledge that the delay was unintentional, petitioner must make such an inquiry to ascertain that, in fact, the delay was unintentional. If petitioner discovers that the delay was intentional, petitioner must so notify the Office.

There is no indication that the person signing the instant petition was ever given a power of attorney or authorization of agent to prosecute the above-identified application. However, in accordance with 37 CFR 1.34(a), the signature of Brian D. Kaul appearing on the petition shall constitute a representation to the United States Patent and Trademark Office that he is authorized to represent the particular party in whose behalf he acts. However, if petitioner desires to receive future correspondence regarding this application, the appropriate power of attorney or authorization of agent must be submitted. A courtesy copy of this decision is being mailed to petitioner. Nevertheless, all future correspondence will be directed solely to the address of record until otherwise instructed.

The petition is **GRANTED.**

A petition under 37 CFR 1.78(a)(6) is only applicable to those applications filed on or after November 29, 2000. Further, the petition is appropriate only after expiration of the period specified in 37 CFR 1.78(a)(5)(ii) and must be filed during the pendency of the nonprovisional application. In addition, the petition must be accompanied by:

(1) the reference required by 35 U.S.C. § 119(e) and 37 CFR 1.78(a)(5)(i) to the prior-filed application, unless previously submitted;
(2) the surcharge set forth in § 1.17(t); and

(3) a statement that the entire delay between the date the claim was due under 37 CFR 1.78(a)(5)(ii) and the date the claim was filed was unintentional. The Director may require additional information where there is a question whether the delay was unintentional.

Additionally, the instant nonprovisional application must be pending at the time of filing of the reference to the prior-filed provisional application as required by 37 CFR 1.78(a)(5)(ii). Further, the nonprovisional application claiming the benefit of the prior-filed provisional application must have been filed within twelve months of the filing date of the prior-filed provisional application.

All of the above requirements having been satisfied, the late claim for priority under 35 U.S.C. § 119(e) is accepted as being unintentionally delayed.

The granting of the petition to accept the delayed benefit claim to the prior-filed application under 37 CFR 1.78(a)(6) should not be construed as meaning that this application is entitled to the benefit of the filing date of the prior-filed application. In order for this application to be entitled to the benefit of the prior-filed application, all other requirements under 35 U.S.C. §119(e) and 37 CFR 1.78(a)(4) and (a)(5) must be met. Similarly, the fact that the corrected Filing Receipt accompanying this decision on petition includes the prior-filed application should not be construed as meaning that applicant is entitled to the claim for benefit of priority to the prior-filed application noted thereon. Accordingly, the examiner will, in due course, consider this benefit claim and determine whether the application is entitled to the benefit of the earlier filing date.

A corrected Filing Receipt, which includes the priority claim to the prior-filed provisional application, accompanies this decision on petition.

The application is being forwarded to Technology Center Art Unit 3766 for consideration by the examiner of the claim under 35 U.S.C. §119(e) for the benefit of priority to the prior-filed provisional application and for consideration of the petition under 37 CFR 1.48 filed on December 14, 2008.

Any inquiries concerning this decision may be directed to the undersigned at (571) 272-3226. All other inquiries concerning either the examination procedures or status of the application should be directed to the Technology Center.

Andrea Smith
Petitions Examiner
Office of Petitions

ATTACHMENT: Corrected Filing Receipt

cc: Brian D. Kelly
Westman, Champlin & Kelly, P.A.
900 Second Avenue South – Suite 1400
Minneapolis, MN 55402-3319

UNITED STATES PATENT AND TRADEMARK OFFICE

UNITED STATES DEPARTMENT OF COMMERCE
United States Patent and Trademark Office
Address: COMMISSIONER FOR PATENTS
P.O. Box 1450
Alexandria, Virginia 22313-1450
www.uspto.gov

APPLICATION NUMBER	FILING or 371(c) DATE	GRP ART UNIT	FIL FEE REC'D	ATTY.DOCKET.NO	TOT CLAIMS	IND CLAIMS
11/418,790	05/05/2006	3766	1190	207,583	45	2

CONFIRMATION NO. 1827

CORRECTED FILING RECEIPT

38137
ABELMAN, FRAYNE & SCHWAB
666 THIRD AVENUE, 10TH FLOOR
NEW YORK, NY 10017

OC000000030003204

Date Mailed: 05/16/2008

Receipt is acknowledged of this non-provisional patent application. The application will be taken up for examination in due course. Applicant will be notified as to the results of the examination. Any correspondence concerning the application must include the following identification information: the U.S. APPLICATION NUMBER, FILING DATE, NAME OF APPLICANT, and TITLE OF INVENTION. Fees transmitted by check or draft are subject to collection. Please verify the accuracy of the data presented on this receipt. **If an error is noted on this Filing Receipt, please submit a written request for a Filing Receipt Correction. Please provide a copy of this Filing Receipt with the changes noted thereon. If you received a "Notice to File Missing Parts" for this application, please submit any corrections to this Filing Receipt with your reply to the Notice. When the USPTO processes the reply to the Notice, the USPTO will generate another Filing Receipt incorporating the requested corrections**

Applicant(s)

Yossi Gross, Moshav Mazor, ISRAEL;

Power of Attorney:

J. Dainow--22959
Jay Cinamon--24156
Jeffrey Schwab--24490
Joseph Catanzaro--25837
Thomas Spath--25928
Alan Gilliland--26549
Anthony Natoli--36223
Anthony Coppola--41493
Steven Hertzberg--41834

Domestic Priority data as claimed by applicant

This appln claims benefit of 60/779,219 03/03/2006

Foreign Applications

If Required, Foreign Filing License Granted: 06/01/2006

The country code and number of your priority application, to be used for filing abroad under the Paris Convention, is **US 11/418,790**

Projected Publication Date: Not Applicable

Non-Publication Request: No

Early Publication Request: No
**** SMALL ENTITY ****

Title

Apparatus for treating stress and urge incontinence

Preliminary Class

607

PROTECTING YOUR INVENTION OUTSIDE THE UNITED STATES

Since the rights granted by a U.S. patent extend only throughout the territory of the United States and have no effect in a foreign country, an inventor who wishes patent protection in another country must apply for a patent in a specific country or in regional patent offices. Applicants may wish to consider the filing of an international application under the Patent Cooperation Treaty (PCT). An international (PCT) application generally has the same effect as a regular national patent application in each PCT-member country. The PCT process **simplifies** the filing of patent applications on the same invention in member countries, but **does not result** in a grant of "an international patent" and does not eliminate the need of applicants to file additional documents and fees in countries where patent protection is desired.

Almost every country has its own patent law, and a person desiring a patent in a particular country must make an application for patent in that country in accordance with its particular laws. Since the laws of many countries differ in various respects from the patent law of the United States, applicants are advised to seek guidance from specific foreign countries to ensure that patent rights are not lost prematurely.

Applicants also are advised that in the case of inventions made in the United States, the Director of the USPTO must issue a license before applicants can apply for a patent in a foreign country. The filing of a U.S. patent application serves as a request for a foreign filing license. The application's filing receipt contains further information and guidance as to the status of applicant's license for foreign filing.

Applicants may wish to consult the USPTO booklet, "General Information Concerning Patents" (specifically, the section entitled "Treaties and Foreign Patents") for more information on timeframes and deadlines for filing foreign patent applications. The guide is available either by contacting the USPTO Contact Center at 800-786-9199, or it can be viewed on the USPTO website at http://www.uspto.gov/web/offices/pac/doc/general/index.html.

For information on preventing theft of your intellectual property (patents, trademarks and copyrights), you may wish to consult the U.S. Government website, http://www.stopfakes.gov. Part of a Department of Commerce initiative, this website includes self-help "toolkits" giving innovators guidance on how to protect intellectual property in specific countries such as China, Korea and Mexico. For questions regarding patent enforcement issues, applicants may call the U.S. Government hotline at 1-866-999-HALT (1-866-999-4158).

LICENSE FOR FOREIGN FILING UNDER

Title 35, United States Code, Section 184

Title 37, Code of Federal Regulations, 5.11 & 5.15

GRANTED

The applicant has been granted a license under 35 U.S.C. 184, if the phrase "IF REQUIRED, FOREIGN FILING LICENSE GRANTED" followed by a date appears on this form. Such licenses are issued in all applications where the conditions for issuance of a license have been met, regardless of whether or not a license may be required as

set forth in 37 CFR 5.15. The scope and limitations of this license are set forth in 37 CFR 5.15(a) unless an earlier license has been issued under 37 CFR 5.15(b). The license is subject to revocation upon written notification. The date indicated is the effective date of the license, unless an earlier license of similar scope has been granted under 37 CFR 5.13 or 5.14.

This license is to be retained by the licensee and may be used at any time on or after the effective date thereof unless it is revoked. This license is automatically transferred to any related applications(s) filed under 37 CFR 1.53(d). This license is not retroactive.

The grant of a license does not in any way lessen the responsibility of a licensee for the security of the subject matter as imposed by any Government contract or the provisions of existing laws relating to espionage and the national security or the export of technical data. Licensees should apprise themselves of current regulations especially with respect to certain countries, of other agencies, particularly the Office of Defense Trade Controls, Department of State (with respect to Arms, Munitions and Implements of War (22 CFR 121-128)); the Bureau of Industry and Security, Department of Commerce (15 CFR parts 730-774); the Office of Foreign AssetsControl, Department of Treasury (31 CFR Parts 500+) and the Department of Energy.

NOT GRANTED

No license under 35 U.S.C. 184 has been granted at this time, if the phrase "IF REQUIRED, FOREIGN FILING LICENSE GRANTED" DOES NOT appear on this form. Applicant may still petition for a license under 37 CFR 5.12, if a license is desired before the expiration of 6 months from the filing date of the application. If 6 months has lapsed from the filing date of this application and the licensee has not received any indication of a secrecy order under 35 U.S.C. 181, the licensee may foreign file the application pursuant to 37 CFR 5.15(b).

UNITED STATES PATENT AND TRADEMARK OFFICE

Commissioner for Patents
United States Patent and Trademark Office
P.O. Box 1450
Alexandria, VA 22313-1450
www.uspto.gov

GREENLEE WINNER AND SULLIVAN P C
4875 PEARL EAST CIRCLE
SUITE 200
BOULDER CO 80301

COPY MAILED

DEC 18 2006

OFFICE OF PETITIONS

In re Application of	:	
Deymier, et al.	:	DECISION REFUSING STATUS
Application No. 11/418,817	:	UNDER 37 CFR 1.47(a)
Filed: May 4, 2006	:	
Attorney Docket No. 57-06	:	

This is in response to the petition under 37 CFR 1.47(a), filed November 27, 2006.

The petition is **DISMISSED**.

Rule 47 applicant is given TWO (2) MONTHS from the mailing date of this decision to reply, correcting the below-noted deficiencies. Any reply should be entitled "Request for Reconsideration of Petition Under 37 CFR 1.47(a)," and should only address the deficiencies noted below, except that the reply may include an oath or declaration executed by the non-signing inventor. **FAILURE TO RESPOND WILL RESULT IN ABANDONMENT OF THE APPLICATION.** Any extensions of time will be governed by 37 CFR 1.136(a).

A grantable petition under 37 CFR 1.47(a) requires: (1) proof that the non-signing inventor cannot be reached or refuses to sign the oath or declaration after having been presented with the application papers (specification, claims and drawings); (2) an acceptable oath or declaration in compliance with 35 U.S.C. §§ 115 and 116; (3) the petition fee; and (4) a statement of the last known address of the non-signing inventor. Applicants lack item (1) set forth above.

As to item (1), the applicable statute (35 U.S.C.§ 116) requires that a "diligent effort" have been expended in attempting to find or reach the non-signing inventor. *See* MPEP 409.03(a).

Attorney Sally A. Sullivan states that Dr. Nina Ossanna informed her that non-signing joint inventor Ian Jongewaard is seriously ill in the hospital. Therefore, he is not available to sign the declaration for the above-identified application.

As stated in MPEP 409.03(d), the fact that an inventor is hospitalized and/or is not conscious is not an acceptable reason for filing under 37 CFR 1.47. 37 CFR 1.43 may be available under

these circumstances. See MPEP 409.02. Such a petition under 37 CFR 1.47will be dismissed as inappropriate.

For future reference, statements of fact should be submitted by parties with first hand knowledge of asserted facts.

Further correspondence with respect to this matter should be addressed as follows:

By Mail: Mail Stop PETITION
Commissioner for Patents
Post Office Box 1450
Alexandria, VA 22313-1450

By Hand: U. S. Patent and Trademark Office
Customer Window, Mail Stop PETITIONS
401 Dulany Street
Alexandria, VA 22314

The centralized facsimile number is **(571) 273-8300.**

Telephone inquiries should be directed to the undersigned at (571) 272-3230.

Shirene Willis Brantley

Shirene Willis Brantley
Senior Petitions Attorney
Office of Petitions

UNITED STATES PATENT AND TRADEMARK OFFICE

Commissioner for Patents
United States Patent and Trademark Office
P.O. Box 1450
Alexandria, VA 22313-1450
www.uspto.gov

GREENLEE WINNER AND SULLIVAN P C
4875 PEARL EAST CIRCLE
SUITE 200
BOULDER CO 80301

COPY MAILED
AUG 0 6 2007
OFFICE OF PETITIONS

In re Application of Deymier, et al. Application No. 11/418,817 Filed: May 4, 2006 Attorney Docket No. 57-06	: : : : :	ON PETITION

This decision is in response to the reconsideration petition under 37 CFR 1.47(a), filed July 6, 2007.

The petition is **DISMISSED AS MOOT**.

A petition under 37 CFR 1.47(a) was initially filed because joint inventor Ian N. Jongwaard was unavailable to sign the declaration for the above-identified application. The petition was dismissed because the fact that an inventor is hospitalized and/or is not conscious is not an acceptable reason for filing under 37 CFR 1.47.

The inventor has since passed away. Per 37 CFR 1.42 When the inventor is dead:

> In case of the death of the inventor, the legal representative (executor, administrator, etc.) of the deceased inventor may make the necessary oath or declaration, and apply for and obtain the patent.

The legal representative for Ian N. Jongwaard has executed a declaration on his behalf.

Further consideration under 37 CFR 1.47(a) is moot; this application does not have any rule 1.47(a) status and no such status should appear on the file wrapper. This application need not be returned to this office for any further consideration under 37 CFR 1.47(a).

After the mailing of this decision, the application will be forwarded to Technology Center G.A.U. 1631 for examination in due course.

Telephone inquiries should be directed to the undersigned at (571) 272-3230.

Shirene Willis Brantley

Shirene Willis Brantley
Senior Petitions Attorney
Office of Petitions

UNITED STATES PATENT AND TRADEMARK OFFICE

Commissioner for Patents
United States Patent and Trademark Office
P.O. Box 1450
Alexandria, VA 22313-1450
www.uspto.gov
DIW Feb-07

BERKELEY LAW & TECHNOLOGY GROUP, LLP
1700 NW 167TH PLACE
SUITE 240
BEAVERTON OR 97006

COPY MAILED

FEB 01 2007

OFFICE OF PETITIONS

In re Application of	:	
Shi et al.	:	
Application No. 11/418,820	:	DECISION ON PETITION
Filed: 5 May, 2006	:	
Atty Docket No. 012.P58025	:	

This is a decision in reference to the paper entitled "REQUEST FOR CORRECTION OF FILING RECEIPT," filed on 18 August, 2006, which is treated as a petition under 37 CFR 1.10(c), requesting that the above-identified application be accorded a filing date of 5 May, 2006, rather than the presently accorded filing date of 8 May, 2006.

Petitioners allege that the application was deposited in Express Mail service on 5 May, 2006. In support, petitioners have provided a copy of Express Mail Label No. EV856863216US (the same Express Mail number found on the itemized Utility Patent Pallication Transmittal sheet accompanying the original application papers located in the official file). Although the Express Mail label bears a "date-in" of "5-8-06" the label also contains an Official USPS postmark dated May 5, 2006. Furthermore, petitioners have supplied, with the present petition, a copy of the USPS Track & Confirm internet report for the above-referenced Express Mail number, showing the package was accepted by the USPS on 5 May, 2006.

In view of the above, the correct date of deposit in Express Mail is 5 May, 2006.

In view of the above, the petition is granted. No petition fee is necessary.

The application is being referred to the Office of Initial Patent Examination for correction of the filing date to **5 May, 2006**.

Telephone inquiries specific to this matter should be directed to the undersigned at (571) 272-3231.

D Wood

Douglas I. Wood
Senior Petitions Attorney
Office of Petitions

UNITED STATES PATENT AND TRADEMARK OFFICE

COMMISSIONER FOR PATENTS
UNITED STATES PATENT AND TRADEMARK OFFICE
P.O. BOX 1450
ALEXANDRIA, VA 22313-1450
www.uspto.gov

Paper No.

ROHIT KHANNA MD
SUITE 580
311 N. CLYDE MORRIS
DAYTONA BEACH FL 32114

COPY MAILED

SEP 20 2006

OFFICE OF PETITIONS

In re Application of :
Rohit Khanna :
Application No. 11/418,849 :
Filed: May 5, 2006 :
Title: CENTRAL NERVOUS SYSTEM:
COOLING CATHETER :

DECISION ON PETITION

This is in response to the communication received July 1, 2006, requesting that the Office accord the above-identified application a filing date of May 5, 2006, with figures 58-60 considered a part of the original application disclosure.

The petition is **dismissed**.

Any request for reconsideration must be filed within **TWO (2) MONTHS** of the date of this decision in order to be considered timely. See 37 CFR 1.181(f). This time period may not be extended pursuant to 37 CFR 1.136(a) or (b).

The application was filed on May 5, 2006. However, on June 1, 2006, the Office mailed a "Notice of Omitted Items" stating that the application had been accorded a filing date; however, Figures 58-60 described in the specification appeared to have been omitted.

In response, applicant filed the instant petition stating that he contended that these figures were included in the application (as specified in the application transmittal).

37 CFR 1.53(e)(2) provides that:

> Any request for review of a notification pursuant to paragraph (e)(1) of this section, or a notification that the original application papers lack a portion of the specification or drawing(s), must be by way of a petition

> pursuant to this paragraph accompanied by the fee set forth in § 1.17(f). In the absence of a timely (§ 1.181(f)) petition pursuant to this paragraph, the filing date of an application in which the applicant was notified of a filing error pursuant to paragraph (e)(1) of this section will be the date the filing error is corrected.

Accordingly, the mailing of a "Notice of Omitted Items" permits the applicant to: (1) promptly establish prior receipt in the PTO of the drawing(s) at issue (generally by way of a date-stamped postcard receipt (MPEP 503)), or (2) promptly submit the omitted drawing(s) in a nonprovisional application and accept the date of such submission as the application filing date (or to accept the application as filed without the omitted drawings). An applicant asserting that the missing drawings were in fact deposited in the PTO with the application papers must file a petition (and the appropriate petition fee) with evidence of such deposit. An applicant desiring to submit the omitted drawings in a nonprovisional application and accept the date of such submission as the application filing date must file any omitted drawing(s) with an oath or declaration in compliance with 37 CFR 1.63 and 1.64 referring to such drawing(s) and a petition under 37 CFR 1.182 (with the petition fee under 37 CFR 1.17(f)) requesting the later filing date within two months of the date of the "Notice of Omitted Items" (37 CFR 1.181(f)).

In this case, petitioner contends that the missing drawings were deposited on May 5, 2006.

Petitioners' contention has been considered, but not found persuasive that figures 58-60 were filed as a part of the original application papers. Papers not present in the application file are not considered present in the application absent convincing evidence to the contrary (e.g., a postcard receipt under MPEP § 503 containing specific itemization of the document(s) or fee(s) purported to have been filed with the correspondence at issue) that the Office received and misplaced any document(s) or fee(s) that is not among the official records of the Office.) The image file wrapper of the application has been reviewed and figures 58-60 are not among the papers received on May 5, 2006.

Moreover, the petition does not include convincing evidence that the drawings were present as part of the original application papers filed on May 5, 2006. Petitioner references the application transmittal as evidencing submission of the figures. Unfortunately, the transmittal is not convincing evidence as it

is not reviewed by the Office upon receipt of the application papers to confirm the presence of the items denoted therein. Whereas, a return postcard is reviewed by the Office to acknowledge receipt of all of the items received in the application. In fact, the purpose of the submission of a return postcard with any submission is to have adequate proof of its filing. See MPEP 503. In this instance it does not appear that applicant utilized a return postcard receipt and applicant has no other convincing evidence of the submission of figures 58-60 on May 5, 2006.

In view thereof, the petition must be dismissed.

Further correspondence with respect to this matter should be addressed as follows:

By mail: Mail Stop Petition
Commissioner for Patents
P.O. Box 1450
Alexandria, VA 22313-1450

By FAX: (571) 273-8300
Attn: Office of Petitions
ATTN: NANCY JOHNSON

By hand: Customer Service Window
Randolph Building
401 Dulany Street
Alexandria, VA 22314

The application is being returned to the Office of Initial Patent Examination for further processing with a filing date of May 5, 2006, using the papers received on that date.

Telephone inquiries related to this decision should be directed to the undersigned at 571-272-3219.

Nancy Johnson
Senior Petitions Attorney
Office of Petitions

UNITED STATES PATENT AND TRADEMARK OFFICE

UNITED STATES DEPARTMENT OF COMMERCE
United States Patent and Trademark Office
Address: COMMISSIONER FOR PATENTS
P.O. Box 1450
Alexandria, Virginia 22313-1450
www.uspto.gov

INTELLECTUAL PROPERTY MANAGEMENT
BOEING MANAGEMENT COMPANY
P.O. BOX 2515
MAIL CODE 110-SD54
SEAL BEACH, CA 90740-1515

Mail Date: 04/20/2010

Applicant	: David W. Kwok	: DECISION ON REQUEST FOR
Patent Number	: 7597288	: RECALCULATION of PATENT
Issue Date	: 10/06/2009	: TERM ADJUSTMENT IN VIEW
Appliction No	: 11/418,856	: OF WYETH AND NOTICE OF INTENT TO
Filed	: 05/05/2006	: ISSUE CERTIFICATE OF CORRECTION
		:

The Request for Recalculation is **GRANTED** to the extent indicated.

The patent term adjustment has been determined to be **0** days. The USPTO will *sua sponte* issue a certificate of correction reflecting the amount of PTA days determined by the recalculation.

Prior to the issuance of the certificate of correction, the USPTO will afford patentee an opportunity to be heard and request reconsideration. Accordingly, patentee has **one month or thirty (30) days**, whichever is longer, to file a request for reconsideration of this patent term adjustment calculation. See 35 U.S.C. 154(b)(3)(B)(ii) and 37 CFR 1.322(a)(4). No extensions of time will be granted under 37 CFR 1.136.

Patentee should use document code PET.OP if electronically filing a request for reconsideration of this patent term adjustment calculation. The patentee must also include the information required by 37 CFR 1.705(b)(2) and the fee required by 37 CFR 1.18(e). If patentee does not file a timely request for reconsideration of this patent term adjustment calculation including the information required by 37 CFR 1.705(b)(2) and the fee required by 37 CFR 1.18(e), the USPTO will issue a certificate of correction reflecting the PTA determination noted above.

Patentee should be aware that in order to preserve the right to review in the United States District Court for the District of Columbia of the USPTO patent term adjustment determination, patentee must ensure that he or she also take the steps required under 35 U.S.C. 154(b)(4)(A) in a timely manner. Nothing in the request for recalculation should be construed as providing an alternative time frame for commencing a civil action under 35 U.S.C. 154(b)(4)(A).

Any questions concerning this decision should be directed to the Office of Patent Legal Administration at 571-272-7702.

UNITED STATES PATENT AND TRADEMARK OFFICE

UNITED STATES DEPARTMENT OF COMMERCE
United States Patent and Trademark Office
Address: COMMISSIONER FOR PATENTS
P.O. Box 1450
Alexandria, Virginia 22313-1450
www.uspto.gov

BLAKELY SOKOLOFF TAYLOR & ZAFMAN LLP
1279 OAKMEAD PARKWAY
SUNNYVALE, CA 94085-4040

Mail Date: 04/21/2010

Applicant	: Xia Gao	: DECISION ON REQUEST FOR
Patent Number	: 7613457	: RECALCULATION of PATENT
Issue Date	: 11/03/2009	: TERM ADJUSTMENT IN VIEW
Appliction No	: 11/418,858	: OF WYETH AND NOTICE OF INTENT TO
Filed	: 05/05/2006	: ISSUE CERTIFICATE OF CORRECTION
		:

The Request for Recalculation is **GRANTED** to the extent indicated.

The patent term adjustment has been determined to be **599** days. The USPTO will *sua sponte* issue a certificate of correction reflecting the amount of PTA days determined by the recalculation.

Prior to the issuance of the certificate of correction, the USPTO will afford patentee an opportunity to be heard and request reconsideration. Accordingly, patentee has **one month or thirty (30) days**, whichever is longer, to file a request for reconsideration of this patent term adjustment calculation. See 35 U.S.C. 154(b)(3)(B)(ii) and 37 CFR 1.322(a)(4). No extensions of time will be granted under 37 CFR 1.136.

Patentee should use document code PET.OP if electronically filing a request for reconsideration of this patent term adjustment calculation. The patentee must also include the information required by 37 CFR 1.705(b)(2) and the fee required by 37 CFR 1.18(e). If patentee does not file a timely request for reconsideration of this patent term adjustment calculation including the information required by 37 CFR 1.705(b)(2) and the fee required by 37 CFR 1.18(e), the USPTO will issue a certificate of correction reflecting the PTA determination noted above.

Patentee should be aware that in order to preserve the right to review in the United States District Court for the District of Columbia of the USPTO patent term adjustment determination, patentee must ensure that he or she also take the steps required under 35 U.S.C. 154(b)(4)(A) in a timely manner. Nothing in the request for recalculation should be construed as providing an alternative time frame for commencing a civil action under 35 U.S.C. 154(b)(4)(A).

Any questions concerning this decision should be directed to the Office of Patent Legal Administration at 571-272-7702.

SPE RESPONSE FOR CERTIFICATE OF CORRECTION

Paper No.: —

DATE 2/19/09

TO SPE OF : ART UNIT 2611

SUBJECT : Request for Certificate of Correction for Appl. No.: 11/418861 Patent No.: 7430234 B2

Please respond to this request for a certificate of correction within 7 days.

FOR IFW FILES:

Please review the requested changes/corrections as shown in the **COCIN** document(s) in the IFW application image. No new matter should be introduced, nor should the scope or meaning of the claims be changed.

Please complete the response (see below) and forward the completed response to scanning using document code **COCX**.

FOR PAPER FILES:

Please review the requested changes/corrections as shown in the attached certificate of correction. Please complete this form (see below) and forward it with the file to:

Certificates of Correction Branch (CofC)
South Tower - 9A22
Palm Location 7580

Virginia Tolbert
Certificates of Correction Branch
703-308-9390 ext. 113

Thank You For Your Assistance

The request for issuing the above-identified correction(s) is hereby:
Note your decision on the appropriate box.

- ☑ **Approved** — **All** changes apply.
- ☐ **Approved in Part** — Specify below which changes **do not** apply.
- ☐ **Denied** — State the reasons for denial below.

Comments:

The correction does not introduce new matter, and does not change the scope of the claim.

SPE

Art Unit

UNITED STATES PATENT AND TRADEMARK OFFICE

UNITED STATES DEPARTMENT OF COMMERCE
United States Patent and Trademark Office
Address: COMMISSIONER FOR PATENTS
P.O. Box 1450
Alexandria, Virginia 22313-1450
www.uspto.gov

THE LAW OFFICE OF KIRK D. WILLIAMS
PO BOX 39425
DENVER, CO 80239-0425

Mail Date: 04/21/2010

Applicant	: Michel Khouderchah	: DECISION ON REQUEST FOR
Patent Number	: 7660299	: RECALCULATION of PATENT
Issue Date	: 02/09/2010	: TERM ADJUSTMENT IN VIEW
Appliction No	: 11/418,865	: OF WYETH AND NOTICE OF INTENT TO
Filed	: 05/05/2006	: ISSUE CERTIFICATE OF CORRECTION
		:

The Request for Recalculation is **GRANTED** to the extent indicated.

The patent term adjustment has been determined to be **819** days. The USPTO will *sua sponte* issue a certificate of correction reflecting the amount of PTA days determined by the recalculation.

Prior to the issuance of the certificate of correction, the USPTO will afford patentee an opportunity to be heard and request reconsideration. Accordingly, patentee has **one month or thirty (30) days**, whichever is longer, to file a request for reconsideration of this patent term adjustment calculation. See 35 U.S.C. 154(b)(3)(B)(ii) and 37 CFR 1.322(a)(4). No extensions of time will be granted under 37 CFR 1.136.

Patentee should use document code PET.OP if electronically filing a request for reconsideration of this patent term adjustment calculation. The patentee must also include the information required by 37 CFR 1.705(b)(2) and the fee required by 37 CFR 1.18(e). If patentee does not file a timely request for reconsideration of this patent term adjustment calculation including the information required by 37 CFR 1.705(b)(2) and the fee required by 37 CFR 1.18(e), the USPTO will issue a certificate of correction reflecting the PTA determination noted above.

Patentee should be aware that in order to preserve the right to review in the United States District Court for the District of Columbia of the USPTO patent term adjustment determination, patentee must ensure that he or she also take the steps required under 35 U.S.C. 154(b)(4)(A) in a timely manner. Nothing in the request for recalculation should be construed as providing an alternative time frame for commencing a civil action under 35 U.S.C. 154(b)(4)(A).

Any questions concerning this decision should be directed to the Office of Patent Legal Administration at 571-272-7702.

UNITED STATES PATENT AND TRADEMARK OFFICE

UNITED STATES DEPARTMENT OF COMMERCE
United States Patent and Trademark Office
Address: COMMISSIONER FOR PATENTS
P.O. Box 1450
Alexandria, Virginia 22313-1450
www.uspto.gov

THE LAW OFFICE OF KIRK D. WILLIAMS
PO BOX 39425
DENVER, CO 80239-0425

Mail Date: 05/18/2010

Applicant : Michel Khouderchah
Patent Number : 7660299
Issue Date : 02/09/2010
Application No : 11/418,865
Filed : 05/05/2006

: NOTICE CONCERNING IMPROPER
: CALCULATION OF PATENT TERM
: ADJUSTMENT BASED UPON USPTO
: IMPROPERLY MEASURING REDUCTION
: PERIOD UNDER 37 CFR 1.704(c)(10).

The United States Patent and Trademark Office (USPTO) discovered that in processing the recent recalculation decisions mailed in response to patentee's filed Request for Recalculation of Patent Term Adjustment in view of Wyeth, the USPTO improperly measured the reduction period for reductions under 37 CFR 1.704(c)(10). Pursuant to 37 CFR 1.704(c)(10), patentee's reduction begins on the date of filing the amendment under 37 CFR 1.312 ("1.312 amendment") or other related paper and ends on the date that the Office mails a response to the filing of the 1.312 amendment or other paper. It has been discovered that during the recalculation, the calculation failed to the limit the reduction to the mail date of the response to the 1.312 amendment or other paper. Accordingly, patentee's reductions were greater than warranted.

This notice **VACATES** the previous GRANTED request for recalculation and provides patentee with a revised GRANTED recalculation.

The patent term adjustment has been determined to be **921** days. The USPTO will *sua sponte* issue a certificate of correction reflecting the amount of patent term adjustment (PTA) days determined by the recalculation.

Prior to the issuance of the certificate of correction, the USPTO will afford patentee an opportunity to be heard and request reconsideration. Accordingly, patentee has **one month or thirty (30) days** from the mail date of this notice, whichever is longer, to file a request for reconsideration of this PTA calculation. See 35 U.S.C. § 154(b)(3)(B)(ii) and 37 CFR 1.322(a)(4).

Patentee should use document code PET.OP if electronically filing a request for reconsideration of this PTA calculation. The patentee must also include the information required by 37 CFR 1.705(b)(2), and the fee required by 37 CFR 1.18(e). If patentee does not file a timely request for reconsideration of this PTA calculation, including the information required by 37 CFR 1.705(b)(2) and the fee required by 37 CFR 1.18(e), the USPTO will issue a certificate of correction reflecting the PTA determination noted above.

Patentee should be aware that in order to preserve the right of review of the USPTO's PTA determination in the United States District Court for the District of Columbia, patentee must ensure that the steps required under 35 U.S.C. § 154 (b)(4) are taken in a timely manner. Nothing in the request for recalculation should be construed as providing an alternative time frame for commencing a civil action under 35 U.S.C. § 154(b)(4).

UNITED STATES PATENT AND TRADEMARK OFFICE

Commissioner for Patents
United States Patent and Trademark Office
P.O. Box 1450
Alexandria, VA 22313-1450
www.uspto.gov

JOHN F. FRY
DRIGGS, HOGG & FRY CO., L.P.A.
38500 CHARDON ROAD
WILLOUGHBY HILLS, OH 44094

COPY MAILED

MAY 16 2008

OFFICE OF PETITIONS

In re Application of	:	
GAO, et al.	:	
Application No. 11/418,867	:	DECISION ON PETITION
Filed: May 5, 2006	:	UNDER 37 CFR 1.313(c)(1)
Attorney Docket No. SUP-10-6098	:	

This is a decision on the petition under 37 CFR 1.313(c), filed May 8, 2008, to withdraw the above-identified application from issue after payment of the issue fee.

The petition is **DISMISSED.**

37 CFR 1.313(c) provides that:

Once the issue fee has been paid, the application will not be withdrawn from issue upon petition by the applicant for any reason except:

(1) Unpatentability of one of more claims, which petition must be accompanied by an unequivocal statement that one or more claims are unpatentable, an amendment to such claim or claims, and an explanation as to how the amendment causes such claim or claims to be patentable;

(2) Consideration of a request for continued examination in compliance with 37 CFR 1.114; or

(3) Express abandonment of the application. Such express abandonment may be in favor of a continuing application.

Upon payment of the issue fee, an application will not be withdrawn from issue upon petition except for the reasons enumerated in 37 CFR 1.313(c). The circumstances of the above-identified application do not fall within any of those exceptions.

For the reason stated above, the petition under 37 CFR 1.313(c) cannot be granted.

Petitioner is reminded that the filing of any renewed petition to withdraw from issue may not be recognized or effective if not received by the appropriate deciding official in time to act prior to issuance. *Note* 37 CFR 1.313(d). It is recommended that the facsimile number listed below be used to file the renewed petition.

Further correspondence with respect to this matter should be addressed as follows:

By mail: Mail Stop PETITIONS
Commissioner for Patents
Post Office Box 1450
Alexandria, VA 22313-1450

By hand: Customer Service Window
Mail Stop Petitions
Randolph Building
401 Dulany Street
Alexandria, VA 22314

By fax: **(571) 273-0025**
Office of Petitions

Any questions concerning this matter may be directed to the undersigned at (571) 272-7253.

Monica A. Graves
Petitions Examiner
Office of Petitions

UNITED STATES PATENT AND TRADEMARK OFFICE

Commissioner for Patents
United States Patent and Trademark Office
P.O. Box 1450
Alexandria, VA 22313-1450
www.uspto.gov

Tejpal S. Hansra
Hansra Patent Services
4525 Glen Meadows Place
Bellingham, WA 98226

COPY MAILED

SEP 2 0 2007

OFFICE OF PETITIONS

In re Application of
Thomas O. Melroe et al.
Application No. 11/418,869
Filed: May 6, 2006
Attorney Docket No. 3123

DECISION ON PETITION
TO WITHDRAW
FROM RECORD

This is a decision on the Request to Withdraw as attorney or agent under 37 C.F.R. § 1.36(b) or 37 C.F.R. § 10.40 filed October 30, 2006.

The request is **APPROVED**.

A review of the file record indicates that Tejpal S. Hansra: (1) does not have power of attorney in this patent application; and (2) has been employed or otherwise engaged in the proceedings in this patent application. In view of the present decision, Tejpal S. Hansra has been withdrawn from the present application and may not prepare or submit papers under 37 C.F.R. § 1.34, or correspond in any manner in this application unless appointed in an acceptable power of attorney under 37 C.F.R. § 1.32(b).

The request to change the correspondence of record is not acceptable as the requested correspondence address is not that of (1) the first named signing inventor; or (2) an intervening assignee of the entire interest under 37 C.F.R. 3.71. Accordingly, all correspondence will be mailed to the first signing inventor. A courtesy copy of this decision will be mailed to the correspondence address for customer number 23043 as noted on the request to withdraw. If this firm desires to receive future correspondence regarding this application, the proper power of attorney documents must be submitted.

The revocation of power of attorney filed on April 23, 2007 is not acceptable since it fails to satisfy the provisions of 37 CFR 3.73(b). The power of attorney should be signed by the assignee or by a person or persons empowered to act on behalf of the assignee. An attorney can not appoint himself as power of attorney. Note 37 CFR 3.73(b).

Applicant is reminded that there is no attorney of record at this time.

There are no outstanding Office actions at this time.

Telephone inquires concerning this decision should be directed to Kimberly Inabinet at 571-272-4618.

Kimberly Inabinet
Kimberly Inabinet
Petitions Examiner
Office of Petitions

cc: Fellers, Snider, Blankenship, Bailiey
& Tippens, P.C.
100 North Broadway, Suite 1700
Oklahoma City, OK 73102-8820

cc: Thomas O. Melrose
6940 N. 63rd Street
Longmont, CO 80503

UNITED STATES PATENT AND TRADEMARK OFFICE

UNITED STATES DEPARTMENT OF COMMERCE
United States Patent and Trademark Office
Address: COMMISSIONER FOR PATENTS
P.O. Box 1450
Alexandria, Virginia 22313-1450
www.uspto.gov

APPLICATION NUMBER	FILING OR 371 (c) DATE	FIRST NAMED APPLICANT	ATTY. DOCKET NO./TITLE
11/418,869	05/06/2006	Thomas O. Melrose	

CONFIRMATION NO. 2041

OC000000025824535

Tejpal S. Hansra
Hansra Patent Services
4525 Glen Meadows Place
Bellingham, WA 98226

Date Mailed: 09/14/2007

NOTICE REGARDING CHANGE OF POWER OF ATTORNEY

This is in response to the Power of Attorney filed 10/30/2006.

- The withdrawal as attorney in this application has been accepted. Future correspondence will be mailed to the new address of record. 37 CFR 1.33.

K. Gabriel

Office of Initial Patent Examination (571) 272-4000, or 1-800-PTO-9199

FORMER ATTORNEY/AGENT COPY

UNITED STATES PATENT AND TRADEMARK OFFICE

Commissioner for Patents
United States Patent and Trademark Office
P.O. Box 1450
Alexandria, VA 22313-1450
www.uspto.gov

POLSINELLI SHALTON WELTE SUELTHAUS P.C.
700 W. 47TH STREET
SUITE 1000
KANSAS CITY MO 64112-1802

COPY MAILED

JUL 21 2006

OFFICE OF PETITIONS

In re Application of	:	
Bentwich, Itzhak	:	
Application No. 11/418,870	:	DECISION ON PETITION
Filed: May 4, 2006	:	TO MAKE SPECIAL UNDER
Attorney Docket No. 050992-109666	:	37 C.F.R. § 1.102(d)
	:	

This is a decision on the petition under 37 CFR 1.102(d), filed on May 25, 2006, to make the above-identified application special based on developing treatments and cures for HIV/AIDS or cancer as set forth in M.P.E.P. § 708.02, Section X.

The petition is **GRANTED**.

A grantable petition to make an application special under 37 CFR 1.102(d) and MPEP § 708.02, Section X: Inventions Relating to HIV/AIDS or cancer, must be accompanied by (1) the petition fee under 37 CFR 1.17(h); and (2) a satisfactory statement explaining how the invention contributes to the diagnosis, treatment or prevention of HIV/AIDS or cancer.

The instant petition includes a satisfactory statement. Accordingly, the above-identified application has been accorded "special" status.

Telephone inquiries concerning this decision should be directed to Petitions Examiner Liana Chase at 571-272-3206. All other inquiries concerning either the examination or status of the application should be directed to the Technology Center.

This matter is being referred to the Technology Center Art Unit 1642 for action on the merits commensurate with this decision.

David Bucci
Petitions Examiner
Office of Petitions

UNITED STATES PATENT AND TRADEMARK OFFICE

COMMISSIONER FOR PATENTS
UNITED STATES PATENT AND TRADEMARK OFFICE
P.O. BOX 1450
ALEXANDRIA, VA 22313-1450
www.uspto.gov

POLSINELLI SHALTON FLANIGAN SUELTHAUS PC
700 W. 47TH STREET
SUITE 1000
KANSAS CITY MO 64112-1802

COPY MAILED

AUG 29 2007

OFFICE OF PETITIONS

In re Application of	:	
Bentwich et al.	:	
Application No. 11/418,870	:	DECISION ON PETITION
Filed: May 4, 2006	:	UNDER 37 CFR 1.78(a)(3)
Atty Docket No.	:	and
050992.0204.NPUS01	:	UNDER 37 CFR 1.78(a)(6)

This is a decision on the PETITION TO ACCEPT AN UNINTENTIONALLY DELAYED PRIORITY CLAIM UNDER 35 U.S.C. § 120, filed May 2, 2007, for the benefit of priority to prior-filed application No. 11/130,645 set forth in the currently filed amendment. In light of the benefit claims set forth in the amendment (and on petition), the petition is also being treated under 37 C.F.R. § 1.78(a)(6) to accept an unintentionally delayed claim under 35 U.S.C. § 119(e) for the benefit of priority to prior-filed provisional application No. 60/665,094.

The petition is **GRANTED**.

A petition for acceptance of a claim for late priority under 37 CFR §§ 1.78(a)(3) and 37 CFR 1.78(a)(6) is only applicable to those applications filed on or after November 29, 2000. Further, the petition is appropriate only after the expiration of the period specified in 37 CFR §§ 1.78(a)(2)(ii) and 37 CFR 1.78(a)(5)(ii), respectively, and must be filed during the pendency of the nonprovisional application. In addition, the petition under 37 CFR § 1.78(a)(3) and 37 CFR § 1.78(a)(6), respectively, must be accompanied by:

(1) the reference required by 35 U.S.C. § 120 and 37 CFR § 1.78(a)(2)(i) 35 U.S.C. § 119(e) and 37 CFR 1.78(a)(5)(i), respectively, of the prior-filed application, unless previously submitted;
(2) the surcharge set forth in § 1.17(t); and
(3) a statement that the entire delay between the date the claim was due under 37 CFR §§ 1.78(a)(2)(ii) and 37 CFR 1.78(a)(5)(ii), respectively, and the date the claim was filed was unintentional. The Director may require additional where there is a question whether the delay was unintentional.

A reference to the prior-filed nonprovisional and provisional applications has been included in an amendment to the first sentence of the specification following the title and in an unexecuted Application Data Sheet, as required by 37 CFR 1.78(a)(2)(iii).

The application data sheet is not executed. Petitioner is reminded that any ADS filed after the application must be executed and must be entitled supplemental ADS. Nonetheless, the reference to the prior applications as required by 35 U.S.C. 120 and 119(e) and 37 CFR 1.78(a) have been submitted in an amendment. See 37 CFR 1.78(a)(2)(iii) and (5)(iii).

This pending nonprovisional application was filed on May 4, 2006. The filing date of provisional application No. 60/665,094, for which priority is claimed is March 25, 2005, and thus, was filed within twelve months of intermediate application No. 11/130,645, filed May 16, 2005, of which this application claims to be a continuation-in-part.

All of the above requirements having been satisfied, the late claim for benefit of priority to the prior-filed applications under 35 U.S.C. § 120 and 35 U.S.C. § 119(e) is accepted as being unintentionally delayed.

The granting of the petition to accept the delayed benefit claim to the prior-filed applications under 37 CFR §§ 1.78(a)(3) and (a)(6) should not be construed as meaning that this application is entitled to the benefit of the filing date of the prior-filed applications. In order for this application to be entitled to the benefit of the prior-filed application, all other requirements under 35 U.S.C. §§120 and 1.78(a)(1) and (a)(2) and

§§119(e) and 1.78(a)(4) and (a)(5) must be met. Similarly, the fact that the corrected Filing Receipt accompanying this decision on petition includes the prior-filed applications should not be construed as meaning that applicant is entitled to the claim for benefit of priority to the prior-filed applications noted thereon. Accordingly, the examiner will, in due course, consider this benefit claim and determine whether the application is entitled to the benefit of the earlier filing date.

A corrected Filing Receipt, which includes the priority claim to the prior-filed applications, accompanies this decision on petition.

Any questions concerning this matter may be directed to the undersigned at (571) 272-3219. All other inquiries concerning either the examination procedures or status of the application should be directed to the Technology Center.

This application is being referred to Technology Center Art Unit 1635 for consideration by the examiner of the claim for benefit of priority under 35 U.S.C. §§ 120 and 119(e) of the prior-filed applications as set forth in the amendment filed May 2, 2007.

Nancy Johnson
Senior Petitions Attorney
Office of Petitions

ATTACHMENT: Corrected Filing Receipt

Early Publication Request: No

**** SMALL ENTITY ****

Title

Lung cancer-related nucleic acids

Preliminary Class

435

PROTECTING YOUR INVENTION OUTSIDE THE UNITED STATES

Since the rights granted by a U.S. patent extend only throughout the territory of the United States and have no effect in a foreign country, an inventor who wishes patent protection in another country must apply for a patent in a specific country or in regional patent offices. Applicants may wish to consider the filing of an international application under the Patent Cooperation Treaty (PCT). An international (PCT) application generally has the same effect as a regular national patent application in each PCT-member country. The PCT process **simplifies** the filing of patent applications on the same invention in member countries, but **does not result** in a grant of "an international patent" and does not eliminate the need of applicants to file additional documents and fees in countries where patent protection is desired.

Almost every country has its own patent law, and a person desiring a patent in a particular country must make an application for patent in that country in accordance with its particular laws. Since the laws of many countries differ in various respects from the patent law of the United States, applicants are advised to seek guidance from specific foreign countries to ensure that patent rights are not lost prematurely.

Applicants also are advised that in the case of inventions made in the United States, the Director of the USPTO must issue a license before applicants can apply for a patent in a foreign country. The filing of a U.S. patent application serves as a request for a foreign filing license. The application's filing receipt contains further information and guidance as to the status of applicant's license for foreign filing.

Applicants may wish to consult the USPTO booklet, "General Information Concerning Patents" (specifically, the section entitled "Treaties and Foreign Patents") for more information on timeframes and deadlines for filing foreign patent applications. The guide is available either by contacting the USPTO Contact Center at 800-786-9199, or it can be viewed on the USPTO website at http://www.uspto.gov/web/offices/pac/doc/general/index.html.

For information on preventing theft of your intellectual property (patents, trademarks and copyrights), you may wish to consult the U.S. Government website, http://www.stopfakes.gov. Part of a Department of Commerce initiative, this website includes self-help "toolkits" giving innovators guidance on how to protect intellectual property in specific countries such as China, Korea and Mexico. For questions regarding patent enforcement issues, applicants may call the U.S. Government hotline at 1-866-999-HALT (1-866-999-4158).

LICENSE FOR FOREIGN FILING UNDER
Title 35, United States Code, Section 184
Title 37, Code of Federal Regulations, 5.11 & 5.15

GRANTED

The applicant has been granted a license under 35 U.S.C. 184, if the phrase "IF REQUIRED, FOREIGN FILING LICENSE GRANTED" followed by a date appears on this form. Such licenses are issued in all applications where the conditions for issuance of a license have been met, regardless of whether or not a license may be required as set forth in 37 CFR 5.15. The scope and limitations of this license are set forth in 37 CFR 5.15(a) unless an earlier license has been issued under 37 CFR 5.15(b). The license is subject to revocation upon written notification. The

date indicated is the effective date of the license, unless an earlier license of similar scope has been granted under 37 CFR 5.13 or 5.14.

This license is to be retained by the licensee and may be used at any time on or after the effective date thereof unless it is revoked. This license is automatically transferred to any related applications(s) filed under 37 CFR 1.53(d). This license is not retroactive.

The grant of a license does not in any way lessen the responsibility of a licensee for the security of the subject matter as imposed by any Government contract or the provisions of existing laws relating to espionage and the national security or the export of technical data. Licensees should apprise themselves of current regulations especially with respect to certain countries, of other agencies, particularly the Office of Defense Trade Controls, Department of State (with respect to Arms, Munitions and Implements of War (22 CFR 121-128)); the Bureau of Industry and Security, Department of Commerce (15 CFR parts 730-774); the Office of Foreign Assets Control, Department of Treasury (31 CFR Parts 500+) and the Department of Energy.

NOT GRANTED

No license under 35 U.S.C. 184 has been granted at this time, if the phrase "IF REQUIRED, FOREIGN FILING LICENSE GRANTED" DOES NOT appear on this form. Applicant may still petition for a license under 37 CFR 5.12, if a license is desired before the expiration of 6 months from the filing date of the application. If 6 months has lapsed from the filing date of this application and the licensee has not received any indication of a secrecy order under 35 U.S.C. 181, the licensee may foreign file the application pursuant to 37 CFR 5.15(b).

UNITED STATES PATENT AND TRADEMARK OFFICE

Commissioner for Patents
United States Patent and Trademark Office
P.O. Box 1450
Alexandria, VA 22313-1450
www.uspto.gov

POLSINELLI SHALTON WELTE SUELTHAUS P.C.
700 W. 47TH STREET
SUITE 1000
KANSAS CITY, MO 64112-1802

COPY MAILED
NOV 2 8 2006
OFFICE OF PETITIONS

In re Application of	:	
Bentwich, Itzhak et al	:	
Application No. 11/418,875	:	DECISION ON PETITION
Filed: May 4, 2006	:	TO MAKE SPECIAL UNDER
Attorney Docket No. 050992-109679	:	37 C.F.R. § 1.102(d)
	:	

This is a decision on the petition under 37 CFR 1.102(d), filed on May 25, 2006 to make the above-identified application special based on developing treatments and cures for HIV/AIDS or cancer as set forth in M.P.E.P. § 708.02, Section X.

The petition is **GRANTED**.

A grantable petition to make an application special under 37 CFR 1.102(d) and MPEP § 708.02, Section X: Inventions Relating to HIV/AIDS or cancer, must be accompanied by (1) the petition fee under 37 CFR 1.17(h); and (2) a satisfactory statement explaining how the invention contributes to the diagnosis, treatment or prevention of HIV/AIDS or cancer.

The instant petition includes a satisfactory statement. Accordingly, the above-identified application has been accorded "special" status.

Telephone inquiries concerning this decision should be directed to Irvin Dingle at 571-272-3210.

All other inquiries concerning either the examination or status of the application should be directed to the Technology Center.

The application is being forwarded to the Technology Center Art Unit 1642 for action on the merits commensurate with this decision.

David Bucci
Petitions Examiner
Office of Petitions

UNITED STATES PATENT AND TRADEMARK OFFICE

Commissioner for Patents
United States Patent and Trademark Office
P.O. Box 1450
Alexandria, VA 22313-1450
www.uspto.gov

ROSETTA-GENOMICS
c/o PSWS
700 W. 47TH STREET
SUITE 1000
KANSAS CITY MO 64112

COPY MAILED

JAN 15 2008

OFFICE OF PETITIONS

In re Application of	: DECISION GRANTING PETITION
Bentwich et al.	: UNDER 37 CFR § 1.78(a)(3)
Application No. 11/418875	: AND 37 CFR § 1.78(a)(6)
Filing or 371(c) Date: 05/04/2006	:
Attorney Docket No. 050992.0204.02USNP	:

This is a decision on the renewed petition under 37 CFR §§ 1.78(a)(3) and 1.78(a)(6), filed November 12, 2007, to accept an unintentionally delayed claim under 35 U.S.C. §§120 and 119(e) for the benefit of priority to the prior-filed applications set forth in the concurrently filed Application Data Sheet.

The petitions are **GRANTED.**

A petition for acceptance of a claim for late priority under 37 CFR §§ 1.78(a)(3) and 1.78(a)(6) is only applicable to those applications filed on or after November 29, 2000. Further, the petition is appropriate only after the expiration of the period specified in 37 CFR §§ 1.78(a)(2)(ii) and 1.78(a)(5)(ii). In addition, the petition under 37 CFR §§ 1.78(a)(3) and 1.78(a)(6) must be accompanied by:

(1) the reference required by 35 U.S.C. §§ 120 and 119(e) and 37 CFR §§ 1.78(a)(2)(i) and 1.78(a)(5)(i) of the prior-filed application, unless previously submitted;

(2) the surcharge set forth in § 1.17(t); and

(3) a statement that the entire delay between the date the claim was due under 37 CFR §§ 1.78(a)(2)(ii) and 1.78(a)(5)(ii) and the date the claim was filed was unintentional. The Director may require additional where there is a question whether the delay was unintentional.

Additionally, the instant nonprovisional application must be pending at the time of filing of the reference to the prior-filed provisional application(s) as required by 37 CFR 1.78(a)(5)(ii). Further, the nonprovisional application(s) claiming the benefit of the prior-filed provisional

application(s) must have been filed within twelve months of the filing date of the prior-filed provisional application(s).

All of the above requirements having been satisfied, the late claim for benefit of priority to the prior-filed applications under 35 U.S.C. §§ 120 and 119(e) is accepted as being unintentionally delayed.

The granting of the petition to accept the delayed benefit claim to the prior-filed applications under 37 CFR §§ 1.78(a)(3) and 1.78(a)(6) should not be construed as meaning that this application is entitled to the benefit of the filing date of the prior-filed applications. In order for this application to be entitled to the benefit of the prior-filed applications, all other requirements under 35 U.S.C. §§120 and 1.78(a)(1) and (a)(2) and under 35 U.S.C. §119(e) and 37 CFR 1.78(a)(4) and (a)(5) must be met. Similarly, the fact that the corrected Filing Receipt accompanying this decision on petition includes the prior-filed applications should not be construed as meaning that applicant is entitled to the claim for benefit of priority to the prior-filed applications noted thereon. Accordingly, the examiner will, in due course, consider this benefit claim and determine whether the application is entitled to the benefit of the earlier filing date.

A corrected Filing Receipt, which includes the priority claim to the prior-filed applications, accompanies this decision on petition.

Any questions concerning this matter may be directed to Derek Woods at (571) 272-3232. All other inquiries concerning either the examination procedures or status of the application should be directed to the Technology Center.

This application is being referred to Technology Center Art Unit 2878 for consideration by the examiner of the claim for benefit of priority under 35 U.S.C. § §120 and 119(e) to the prior-filed nonprovisional and provisional applications.

Anthony Knight
Supervisor
Office of Petitions

ATTACHMENT : Corrected Filing Receipt

UNITED STATES PATENT AND TRADEMARK OFFICE

UNITED STATES DEPARTMENT OF COMMERCE
United States Patent and Trademark Office
Address: COMMISSIONER FOR PATENTS
P.O. Box 1450
Alexandria, Virginia 22313-1450
www.uspto.gov

APPLICATION NUMBER	FILING or 371(c) DATE	GRP ART UNIT	FIL FEE REC'D	ATTY.DOCKET.NO	TOT CLAIMS	IND CLAIMS
11/418,875	05/04/2006	1635	1130	050992.0204.02USNP	16	1

CONFIRMATION NO. 5650

CORRECTED FILING RECEIPT

OC000000027440431

37808
ROSETTA-GENOMICS
c/o PSWS
700 W. 47TH STREET
SUITE 1000
KANSAS CITY, MO 64112

Date Mailed: 12/26/2007

Receipt is acknowledged of this non-provisional patent application. The application will be taken up for examination in due course. Applicant will be notified as to the results of the examination. Any correspondence concerning the application must include the following identification information: the U.S. APPLICATION NUMBER, FILING DATE, NAME OF APPLICANT, and TITLE OF INVENTION. Fees transmitted by check or draft are subject to collection. Please verify the accuracy of the data presented on this receipt. **If an error is noted on this Filing Receipt, please write to the Office of Initial Patent Examination's Filing Receipt Corrections. Please provide a copy of this Filing Receipt with the changes noted thereon. If you received a "Notice to File Missing Parts" for this application, please submit any corrections to this Filing Receipt with your reply to the Notice. When the USPTO processes the reply to the Notice, the USPTO will generate another Filing Receipt incorporating the requested corrections**

Applicant(s)

Itzhak Bentwich, Kfar Daniel, ISRAEL;
Amir Avniel, Givatayim, ISRAEL;
Yael Karov, Tel Aviv, ISRAEL;
Ranit Aharonov, Tel Aviv, ISRAEL;

Power of Attorney: The patent practitioners associated with Customer Number 37808

Domestic Priority data as claimed by applicant

This application is a CON of 11/130,645 05/16/2005
which claims benefit of 60/522,457 10/04/2004
and claims benefit of 60/665,094 03/25/2005

Foreign Applications

If Required, Foreign Filing License Granted: 02/07/2007

The country code and number of your priority application, to be used for filing abroad under the Paris Convention, is **US 11/418,875**

Projected Publication Date: Not Applicable

Non-Publication Request: No

Early Publication Request: No

Title

Liver cancer-related nucleic acids

Preliminary Class

536

PROTECTING YOUR INVENTION OUTSIDE THE UNITED STATES

Since the rights granted by a U.S. patent extend only throughout the territory of the United States and have no effect in a foreign country, an inventor who wishes patent protection in another country must apply for a patent in a specific country or in regional patent offices. Applicants may wish to consider the filing of an international application under the Patent Cooperation Treaty (PCT). An international (PCT) application generally has the same effect as a regular national patent application in each PCT-member country. The PCT process **simplifies** the filing of patent applications on the same invention in member countries, but **does not result** in a grant of "an international patent" and does not eliminate the need of applicants to file additional documents and fees in countries where patent protection is desired.

Almost every country has its own patent law, and a person desiring a patent in a particular country must make an application for patent in that country in accordance with its particular laws. Since the laws of many countries differ in various respects from the patent law of the United States, applicants are advised to seek guidance from specific foreign countries to ensure that patent rights are not lost prematurely.

Applicants also are advised that in the case of inventions made in the United States, the Director of the USPTO must issue a license before applicants can apply for a patent in a foreign country. The filing of a U.S. patent application serves as a request for a foreign filing license. The application's filing receipt contains further information and guidance as to the status of applicant's license for foreign filing.

Applicants may wish to consult the USPTO booklet, "General Information Concerning Patents" (specifically, the section entitled "Treaties and Foreign Patents") for more information on timeframes and deadlines for filing foreign patent applications. The guide is available either by contacting the USPTO Contact Center at 800-786-9199, or it can be viewed on the USPTO website at http://www.uspto.gov/web/offices/pac/doc/general/index.html.

For information on preventing theft of your intellectual property (patents, trademarks and copyrights), you may wish to consult the U.S. Government website, http://www.stopfakes.gov. Part of a Department of Commerce initiative, this website includes self-help "toolkits" giving innovators guidance on how to protect intellectual property in specific countries such as China, Korea and Mexico. For questions regarding patent enforcement issues, applicants may call the U.S. Government hotline at 1-866-999-HALT (1-866-999-4158).

LICENSE FOR FOREIGN FILING UNDER

Title 35, United States Code, Section 184

Title 37, Code of Federal Regulations, 5.11 & 5.15

GRANTED

The applicant has been granted a license under 35 U.S.C. 184, if the phrase "IF REQUIRED, FOREIGN FILING LICENSE GRANTED" followed by a date appears on this form. Such licenses are issued in all applications where the conditions for issuance of a license have been met, regardless of whether or not a license may be required as

set forth in 37 CFR 5.15. The scope and limitations of this license are set forth in 37 CFR 5.15(a) unless an earlier license has been issued under 37 CFR 5.15(b). The license is subject to revocation upon written notification. The date indicated is the effective date of the license, unless an earlier license of similar scope has been granted under 37 CFR 5.13 or 5.14.

This license is to be retained by the licensee and may be used at any time on or after the effective date thereof unless it is revoked. This license is automatically transferred to any related applications(s) filed under 37 CFR 1.53(d). This license is not retroactive.

The grant of a license does not in any way lessen the responsibility of a licensee for the security of the subject matter as imposed by any Government contract or the provisions of existing laws relating to espionage and the national security or the export of technical data. Licensees should apprise themselves of current regulations especially with respect to certain countries, of other agencies, particularly the Office of Defense Trade Controls, Department of State (with respect to Arms, Munitions and Implements of War (22 CFR 121-128)); the Bureau of Industry and Security, Department of Commerce (15 CFR parts 730-774); the Office of Foreign AssetsControl, Department of Treasury (31 CFR Parts 500+) and the Department of Energy.

NOT GRANTED

No license under 35 U.S.C. 184 has been granted at this time, if the phrase "IF REQUIRED, FOREIGN FILING LICENSE GRANTED" DOES NOT appear on this form. Applicant may still petition for a license under 37 CFR 5.12, if a license is desired before the expiration of 6 months from the filing date of the application. If 6 months has lapsed from the filing date of this application and the licensee has not received any indication of a secrecy order under 35 U.S.C. 181, the licensee may foreign file the application pursuant to 37 CFR 5.15(b).

UNITED STATES PATENT AND TRADEMARK OFFICE

Commissioner for Patents
United States Patent and Trademark Office
P.O. Box 1450
Alexandria, VA 22313-1450
www.uspto.gov

ROSETTA-GENOMICS
c/o PSWS
700 W. 47TH STREET
SUITE 1000
KANSAS CITY MO 64112

MAILED

FEB 13 2009

OFFICE OF PETITIONS

In re Application of	: DECISION DISMISSING PETITION
Bentwich et al.	: UNDER 37 CFR § 1.78(a)(3)
Application No. 11/418875	:
Filing or 371(c) Date: 05/04/2006	:
Attorney Docket No. 050992.0204.02USNP	:

This is a decision on the second renewed petition under 37 CFR §§ 1.78(a)(3) and 1.78(a)(6), filed December 22, 2008, to accept an unintentionally delayed claim under 35 U.S.C. §§ 119 and 120 for the benefit of priority to the prior-filed application(s) set forth in the Amendment filed August 4, 2008.

The petition is **DISMISSED AS MOOT.**

The petition requests correction of a typographical error in the Application Data Sheet ("ADS") filed with the First Renewed Petition, wherein the relationship of the present application was stated to be as a continuation of prior U.S. Patent Application No. 11/130,645. Applicant petitions to correct the relationship of the present application as a continuation-in-part, rather than a continuation of prior U.S. Patent Application No. 11/130,645.

In the Decision granting the first renewed petition, the Office noted the claim for benefit from the present application as a continuation of prior U.S. Patent Application No. 11/130,645. The Office has published on its website, Q&A's regarding the American Inventors Protection Act, enacted November 29, 1999, as Public Law 106-113 and amended by the Intellectual Property and High Technology Technical Amendments Act of 2002 (Public Law 107-273) enacted November 2, 2002. Therein, the Office noted the following question and answer:

> **CX6. Applicant filed an application with a benefit claim to an earlier copending nonprovisional application. The benefit claim was filed within four months from the actual filing date of the application, but the relationship of the applications was designated as "continuation." <u>If applicant wants to change the relationship to "continuation-in-part," would a petition under 37 CFR 1.78(a)(3) and the surcharge set forth in 37 CFR 1.17(t) be required</u>?** (added 4Feb2005)

> No, the petition under 37 CFR 1.78(a)(3) and the surcharge would not be required when applicant is changing the relationship in a benefit claim from "continuation" (or "divisional") to "continuation-in-part" or from "continuation-in-part" to "continuation" (or "divisional"), or from "continuation" to "divisional," because the Office was able to schedule the application for publication with the relationship given.

In this instance, the Office granted the first renewed petition to accept the delayed benefit claim to prior U.S. Patent Application No. 11/130,645, filed May 16, 2005, and the present application published on November 8, 2007.

In view of the foregoing, no petition is necessary to change the relationship in the benefit claim, and the petition is dismissed as moot. The relationship of the present application to prior U.S. Patent Application No. 11/130,645 has been changed to reflect the present application as a continuation-in-part of prior U.S. Patent Application No. 11/130,645. A Corrected Filing Receipt noting the change accompanies this Decision.

No petition fee has been submitted, and none is due.

Any questions concerning this decision on petition may be directed to Derek Woods at (571) 272-3232. All other inquiries concerning either the examination procedures or status of the application should be directed to the Technology Center.

This application is being referred to Technology Center AU 1635 for consideration by the examiner of applicant's entitlement to claim benefit of priority under 35 U.S.C. § 120 to the prior-filed applications.

Anthony Knight
Supervisor
Office of Petitions

Enclosure: Corrected Filing Receipt

UNITED STATES PATENT AND TRADEMARK OFFICE

UNITED STATES DEPARTMENT OF COMMERCE
United States Patent and Trademark Office
Address: COMMISSIONER FOR PATENTS
P.O. Box 1450
Alexandria, Virginia 22313-1450
www.uspto.gov

APPLICATION NUMBER	FILING or 371(c) DATE	GRP ART UNIT	FIL FEE REC'D	ATTY.DOCKET.NO	TOT CLAIMS	IND CLAIMS
11/418,875	05/04/2006	1635	1130	050992.0204.02USNP	16	1

CONFIRMATION NO. 5650

CORRECTED FILING RECEIPT

OC000000027440431

37808
ROSETTA-GENOMICS
c/o PSWS
700 W. 47TH STREET
SUITE 1000
KANSAS CITY, MO 64112

Date Mailed: 02/05/2009

Receipt is acknowledged of this non-provisional patent application. The application will be taken up for examination in due course. Applicant will be notified as to the results of the examination. Any correspondence concerning the application must include the following identification information: the U.S. APPLICATION NUMBER, FILING DATE, NAME OF APPLICANT, and TITLE OF INVENTION. Fees transmitted by check or draft are subject to collection. Please verify the accuracy of the data presented on this receipt. **If an error is noted on this Filing Receipt, please submit a written request for a Filing Receipt Correction. Please provide a copy of this Filing Receipt with the changes noted thereon. If you received a "Notice to File Missing Parts" for this application, please submit any corrections to this Filing Receipt with your reply to the Notice. When the USPTO processes the reply to the Notice, the USPTO will generate another Filing Receipt incorporating the requested corrections**

Applicant(s)

Itzhak Bentwich, Kfar Daniel, ISRAEL;
Amir Avniel, Givatayim, ISRAEL;
Yael Karov, Tel Aviv, ISRAEL;
Ranit Aharonov, Tel Aviv, ISRAEL;

Power of Attorney: The patent practitioners associated with Customer Number 37808

Domestic Priority data as claimed by applicant

This application is a CIP of 11/130,645 05/16/2005
which claims benefit of 60/522,457 10/04/2004
and claims benefit of 60/665,094 03/25/2005

Foreign Applications

If Required, Foreign Filing License Granted: 02/07/2007

The country code and number of your priority application, to be used for filing abroad under the Paris Convention, is **US 11/418,875**

Projected Publication Date: Not Applicable

Non-Publication Request: No

Early Publication Request: No

Title

Liver cancer-related nucleic acids

Preliminary Class

536

PROTECTING YOUR INVENTION OUTSIDE THE UNITED STATES

Since the rights granted by a U.S. patent extend only throughout the territory of the United States and have no effect in a foreign country, an inventor who wishes patent protection in another country must apply for a patent in a specific country or in regional patent offices. Applicants may wish to consider the filing of an international application under the Patent Cooperation Treaty (PCT). An international (PCT) application generally has the same effect as a regular national patent application in each PCT-member country. The PCT process **simplifies** the filing of patent applications on the same invention in member countries, but **does not result** in a grant of "an international patent" and does not eliminate the need of applicants to file additional documents and fees in countries where patent protection is desired.

Almost every country has its own patent law, and a person desiring a patent in a particular country must make an application for patent in that country in accordance with its particular laws. Since the laws of many countries differ in various respects from the patent law of the United States, applicants are advised to seek guidance from specific foreign countries to ensure that patent rights are not lost prematurely.

Applicants also are advised that in the case of inventions made in the United States, the Director of the USPTO must issue a license before applicants can apply for a patent in a foreign country. The filing of a U.S. patent application serves as a request for a foreign filing license. The application's filing receipt contains further information and guidance as to the status of applicant's license for foreign filing.

Applicants may wish to consult the USPTO booklet, "General Information Concerning Patents" (specifically, the section entitled "Treaties and Foreign Patents") for more information on timeframes and deadlines for filing foreign patent applications. The guide is available either by contacting the USPTO Contact Center at 800-786-9199, or it can be viewed on the USPTO website at http://www.uspto.gov/web/offices/pac/doc/general/index.html.

For information on preventing theft of your intellectual property (patents, trademarks and copyrights), you may wish to consult the U.S. Government website, http://www.stopfakes.gov. Part of a Department of Commerce initiative, this website includes self-help "toolkits" giving innovators guidance on how to protect intellectual property in specific countries such as China, Korea and Mexico. For questions regarding patent enforcement issues, applicants may call the U.S. Government hotline at 1-866-999-HALT (1-866-999-4158).

LICENSE FOR FOREIGN FILING UNDER

Title 35, United States Code, Section 184

Title 37, Code of Federal Regulations, 5.11 & 5.15

GRANTED

The applicant has been granted a license under 35 U.S.C. 184, if the phrase "IF REQUIRED, FOREIGN FILING LICENSE GRANTED" followed by a date appears on this form. Such licenses are issued in all applications where the conditions for issuance of a license have been met, regardless of whether or not a license may be required as

set forth in 37 CFR 5.15. The scope and limitations of this license are set forth in 37 CFR 5.15(a) unless an earlier license has been issued under 37 CFR 5.15(b). The license is subject to revocation upon written notification. The date indicated is the effective date of the license, unless an earlier license of similar scope has been granted under 37 CFR 5.13 or 5.14.

This license is to be retained by the licensee and may be used at any time on or after the effective date thereof unless it is revoked. This license is automatically transferred to any related applications(s) filed under 37 CFR 1.53(d). This license is not retroactive.

The grant of a license does not in any way lessen the responsibility of a licensee for the security of the subject matter as imposed by any Government contract or the provisions of existing laws relating to espionage and the national security or the export of technical data. Licensees should apprise themselves of current regulations especially with respect to certain countries, of other agencies, particularly the Office of Defense Trade Controls, Department of State (with respect to Arms, Munitions and Implements of War (22 CFR 121-128)); the Bureau of Industry and Security, Department of Commerce (15 CFR parts 730-774); the Office of Foreign AssetsControl, Department of Treasury (31 CFR Parts 500+) and the Department of Energy.

NOT GRANTED

No license under 35 U.S.C. 184 has been granted at this time, if the phrase "IF REQUIRED, FOREIGN FILING LICENSE GRANTED" DOES NOT appear on this form. Applicant may still petition for a license under 37 CFR 5.12, if a license is desired before the expiration of 6 months from the filing date of the application. If 6 months has lapsed from the filing date of this application and the licensee has not received any indication of a secrecy order under 35 U.S.C. 181, the licensee may foreign file the application pursuant to 37 CFR 5.15(b).

UNITED STATES PATENT AND TRADEMARK OFFICE

UNITED STATES DEPARTMENT OF COMMERCE
United States Patent and Trademark Office
Address: COMMISSIONER FOR PATENTS
P.O. Box 1450
Alexandria, Virginia 22313-1450
www.uspto.gov

DORSEY & WHITNEY LLP
INTELLECTUAL PROPERTY DEPARTMENT
Columbia Center
701 Fifth Avenue, Suite 6100
SEATTLE, WA 98104-7043

Mail Date: 04/21/2010

Applicant	: Paul A. LaBerge	: DECISION ON REQUEST FOR
Patent Number	: 7594088	: RECALCULATION of PATENT
Issue Date	: 09/22/2009	: TERM ADJUSTMENT IN VIEW
Appliction No	: 11/418,897	: OF WYETH AND NOTICE OF INTENT TO
Filed	: 05/04/2006	: ISSUE CERTIFICATE OF CORRECTION
		:

The Request for Recalculation is **GRANTED** to the extent indicated.

The patent term adjustment has been determined to be **596** days. The USPTO will *sua sponte* issue a certificate of correction reflecting the amount of PTA days determined by the recalculation.

Prior to the issuance of the certificate of correction, the USPTO will afford patentee an opportunity to be heard and request reconsideration. Accordingly, patentee has **one month or thirty (30) days**, whichever is longer, to file a request for reconsideration of this patent term adjustment calculation. See 35 U.S.C. 154(b)(3)(B)(ii) and 37 CFR 1.322(a)(4). No extensions of time will be granted under 37 CFR 1.136.

Patentee should use document code PET.OP if electronically filing a request for reconsideration of this patent term adjustment calculation. The patentee must also include the information required by 37 CFR 1.705(b)(2) and the fee required by 37 CFR 1.18(e). If patentee does not file a timely request for reconsideration of this patent term adjustment calculation including the information required by 37 CFR 1.705(b)(2) and the fee required by 37 CFR 1.18(e), the USPTO will issue a certificate of correction reflecting the PTA determination noted above.

Patentee should be aware that in order to preserve the right to review in the United States District Court for the District of Columbia of the USPTO patent term adjustment determination, patentee must ensure that he or she also take the steps required under 35 U.S.C. 154(b)(4)(A) in a timely manner. Nothing in the request for recalculation should be construed as providing an alternative time frame for commencing a civil action under 35 U.S.C. 154(b)(4)(A).

Any questions concerning this decision should be directed to the Office of Patent Legal Administration at 571-272-7702.

UNITED STATES PATENT AND TRADEMARK OFFICE

UNITED STATES DEPARTMENT OF COMMERCE
United States Patent and Trademark Office
Address: COMMISSIONER FOR PATENTS
P.O. Box 1450
Alexandria, Virginia 22313-1450
www.uspto.gov

DORSEY & WHITNEY LLP
INTELLECTUAL PROPERTY DEPARTMENT
Columbia Center
701 Fifth Avenue, Suite 6100
SEATTLE, WA 98104-7043

Mail Date: 05/18/2010

Applicant : Paul A. LaBerge
Patent Number : 7594088
Issue Date : 09/22/2009
Application No : 11/418,897
Filed : 05/04/2006

: NOTICE CONCERNING IMPROPER
: CALCULATION OF PATENT TERM
: ADJUSTMENT BASED UPON USPTO
: IMPROPERLY MEASURING REDUCTION
: PERIOD UNDER 37 CFR 1.704(c)(10).

The United States Patent and Trademark Office (USPTO) discovered that in processing the recent recalculation decisions mailed in response to patentee's filed Request for Recalculation of Patent Term Adjustment in view of Wyeth, the USPTO improperly measured the reduction period for reductions under 37 CFR 1.704(c)(10). Pursuant to 37 CFR 1.704(c)(10), patentee's reduction begins on the date of filing the amendment under 37 CFR 1.312 ("1.312 amendment") or other related paper and ends on the date that the Office mails a response to the filing of the 1.312 amendment or other paper. It has been discovered that during the recalculation, the calculation failed to the limit the reduction to the mail date of the response to the 1.312 amendment or other paper. Accordingly, patentee's reductions were greater than warranted.

This notice **VACATES** the previous GRANTED request for recalculation and provides patentee with a revised GRANTED recalculation.

The patent term adjustment has been determined to be **662** days. The USPTO will *sua sponte* issue a certificate of correction reflecting the amount of patent term adjustment (PTA) days determined by the recalculation.

Prior to the issuance of the certificate of correction, the USPTO will afford patentee an opportunity to be heard and request reconsideration. Accordingly, patentee has **one month or thirty (30) days** from the mail date of this notice, whichever is longer, to file a request for reconsideration of this PTA calculation. See 35 U.S.C. § 154(b)(3)(B)(ii) and 37 CFR 1.322(a)(4).

Patentee should use document code PET.OP if electronically filing a request for reconsideration of this PTA calculation. The patentee must also include the information required by 37 CFR 1.705(b)(2), and the fee required by 37 CFR 1.18(e). If patentee does not file a timely request for reconsideration of this PTA calculation, including the information required by 37 CFR 1.705(b)(2) and the fee required by 37 CFR 1.18(e), the USPTO will issue a certificate of correction reflecting the PTA determination noted above.

Patentee should be aware that in order to preserve the right of review of the USPTO's PTA determination in the United States District Court for the District of Columbia, patentee must ensure that the steps required under 35 U.S.C. § 154 (b)(4) are taken in a timely manner. Nothing in the request for recalculation should be construed as providing an alternative time frame for commencing a civil action under 35 U.S.C. § 154(b)(4).

UNITED STATES PATENT AND TRADEMARK OFFICE

Commissioner for Patents
United States Patent and Trademark Office
P.O. Box 1450
Alexandria, VA 22313-1450
www.uspto.gov

EDELL, SHAPIRO & FINNAN, LLC
1901 RESEARCH BOULEVARD, SUITE 400
ROCKVILLE, MD 20850

MAILED

MAR 03 2010

OFFICE OF PETITIONS

In re Application of	:	
Jun IMAI	:	
Application No. 11/418,902	:	DECISION GRANTING PETITION
Filed: May 4, 2006	:	UNDER 37 CFR 1.313(c)(2)
Attorney Docket No. **1389.0097C**	:	

This is a decision on the petition under 37 CFR 1.313(c)(2), filed February 26, 2010, to withdraw the above-identified application from issue after payment of the issue fee.

The petition is **GRANTED**.

The above-identified application is withdrawn from issue for consideration of a submission under 37 CFR 1.114 (request for continued examination). *See* 37 CFR 1.313(c)(2).

Petitioner is advised that the issue fee paid on January 19, 2010 cannot be refunded. If, however, this application is again allowed, petitioner may request that it be applied towards the issue fee required by the new Notice of Allowance.[1]

Telephone inquiries should be directed to the undersigned at (571) 272-7253.

This application is being referred to Technology Center AU 3711 for processing of the request for continued examination under 37 CFR 1.114 and for consideration of the concurrently filed information disclosure statement.

/Monica A. Graves/
Petitions Examiner, Office of Petitions

---

[1] *The request to apply the issue fee to the new Notice may be satisfied by completing and returning the new Part B – Fee(s) Transmittal Form (along with any balance due at the time of submission). Petitioner is advised that the Issue Fee Transmittal Form* ***must*** *be completed and timely submitted to avoid abandonment of the application.*

UNITED STATES PATENT AND TRADEMARK OFFICE

Commissioner for Patents
United States Patent and Trademark Office
P.O. Box 1450
Alexandria, VA 22313-1450
www.uspto.gov

Bernard S. Hoffman
10 Colgate Street
Port Jefferson Station NY 11776

COPY MAILED

JUN 2 7 2008

OFFICE OF PETITIONS

In re Application of	:	
Chaim Schwimmer	:	
Application No. 11/418,912	:	DECISION ON PETITION
Filed: May 5, 2006	:	TO MAKE SPECIAL UNDER
Attorney Docket No. SCHWIMMER	:	37 CFR 1.102(c)(1)
	:	

This is a decision on the petition under 37 CFR 1.102(c)(1), filed May 12, 2008, to make the above-identified application special based on applicant's age as set forth in M.P.E.P. § 708.02, Section IV.

The petition is **GRANTED**.

A grantable petition to make an application special under 37 CFR 1.102(c)(1) and MPEP § 708.02, Section IV: Applicant's Age must be accompanied by evidence showing that at least one of the applicants is 65 years of age, or more, such as a birth certificate or a statement by applicant. No fee is required

The instant petition includes a statement from the applicant declaring that he/she is 65 years of age or older. Accordingly, the above-identified application has been accorded "special" status.

Telephone inquiries concerning this decision should be directed to Terri Williams at 571-272-2991.

All other inquiries concerning either the examination or status of the application should be directed to the Technology Center.

The application is being forwarded to the Technology Center Art Unit 4133 for action on the merits commensurate with this decision.

Terri Williams

Terri Williams
Petitions Examiner
Office of Petitions

UNITED STATES PATENT AND TRADEMARK OFFICE

Commissioner for Patents
United States Patent and Trademark Office
P.O. Box 1450
Alexandria, VA 22313-1450
www.uspto.gov

KELLEY DRYE & WARREN LLP
13th Floor
400 Atlantic Street
Stamford, CT 06901

COPY MAILED

JUL 31 2009

OFFICE OF PETITIONS

In re Application of	:	
Marc Helbing, et al.	:	
Application No. 11/418,928	:	DECISION ON PETITION
Filed: May 5, 2009	:	TO WITHDRAW
Attorney Docket No. NU-104(P)(US)	:	FROM RECORD
	:	

This is a decision on the Request to Withdraw as attorney or agent of record under 37 C.F.R. § 1.36(b), filed June 16, 2009

The request is **NOT APPROVED** as moot.

A review of the file record indicates that the power of attorney to Kelley Drye & Warren LLP has been revoked by the assignee of the patent application on July 28, 2009. Accordingly, the request to withdraw under 37 C.F.R. § 1.36(b) is moot.

All future communications from the Office will continue to be directed to the below-listed address until otherwise notified by applicant.

Telephone inquires concerning this decision should be directed to Terri Williams at 571-272-2991.

Terri Williams
Petitions Examiner
Office of Petitions

cc: **WOLF GREENFIELD & SACKS, P.C.**
600 Atlantic Avenue
Boston, MA 02210-2206

UNITED STATES PATENT AND TRADEMARK OFFICE

Commissioner for Patents
United States Patent and Trademark Office
P.O. Box 1450
Alexandria, VA 22313-1450
www.uspto.gov

PAUL V. KELLER, LLC
4585 LIBERTY RD.
SOUTH EUCLID OH 44121

COPY MAILED

JAN 19 2007

OFFICE OF PETITIONS

In re Application of	:	
Reuter, Johannes Walter	:	DECISION ON PETITION
Application No. 11/418,938	:	TO MAKE SPECIAL
Filed: May 5, 2006	:	37 CFR 1.102(c)
Attorney Docket No. 05-ERC-418	:	

This is a decision on the petition under 37 CFR 1.102(c)(2)(i), filed May 5, 2006, to make the above-identified application special based on the invention materially enhancing the quality of the environment as set forth in M.P.E.P. § 708.02, Section V.

The petition is **DISMISSED**.

A grantable petition to make an application special under 37 CFR 1.102(c)(2)(i) and MPEP § 708.02, Section V: Environmental Quality, must state that special status is sought because the invention materially enhances the quality of the environment by contributing to the restoration or maintenance of basic life-sustaining natural elements. If the disclosure is not clear on its face that the claimed invention materially enhances the quality of the environment by contributing to the restoration or maintenance of one of the basic life-sustaining natural elements, the petition must be accompanied by a statement by the applicant, assignee, or an attorney/agent registered to practice before the Office explaining how the materiality standard is met. No fee is required

Petitioner's submission fails to meet the criteria set out with respect to materially enhancing the quality of the environment by contributing to the restoration or maintenance of basis life-sustaining natural elements as set forth in M.P.E.P. § 708.02(V). The specification and claims as originally filed indicate the invention is directed to an affordable product that can reduce emissions from diesel engines. However, the instant petition fails to meet the materiality standard of 37 CFR 1.102(c)(2)(ii). Although the invention is directed to the reduction of diesel emissions, the materiality standard of the rule has not been met, i.e., petitioner has failed to state how the claimed invention contributes in a significant, substantial, or noticeable manner to the maintenance of basic life-sustaining natural elements. That the invention may reduce diesel emissions in an affordable manner does not in itself meet the materiality standard. As a result, no material contribution to the restoration or maintenance of basic life-sustaining natural elements has been persuasively shown.

Further correspondence with respect to this matter should be addressed as follows:

By Mail: Mail Stop PETITION
Commissioner for Patents
P. O. Box 1450
Alexandria, VA 22313-1450

By hand: U. S. Patent and Trademark Office
Customer Service Window, Mail Stop Petitions
Randolph Building
401 Dulany Street
Alexandria, VA 22314

By FAX: (571) 273-8300

Telephone inquiries concerning this decision should be directed to Petitions Examiner Liana Chase at 571-272-3206. All other inquiries concerning either the examination or status of the application should be directed to the Technology Center.

This matter is being referred to the Technology Center Art Unit 3748 for action in its regular turn.

David Bucci
Petitions Examiner
Office of Petitions

UNITED STATES PATENT AND TRADEMARK OFFICE

UNITED STATES DEPARTMENT OF COMMERCE
United States Patent and Trademark Office
Address: COMMISSIONER FOR PATENTS
P.O. Box 1450
Alexandria, Virginia 22313-1450
www.uspto.gov

APPLICATION NO.	FILING DATE	FIRST NAMED INVENTOR	ATTORNEY DOCKET NO.	CONFIRMATION NO.
11/418,938	05/05/2006	Johannes Walter Reuter	05-ERC-418	1931

7590 08/17/2009

PAUL V. KELLER, PLC
4585 LIBERTY RD.
SOUTH EUCLID, OH 44121

EXAMINER
TRAN, DIEM T

ART UNIT	PAPER NUMBER
3748	

NOTIFICATION DATE	DELIVERY MODE
08/17/2009	ELECTRONIC

DECISION GRANTING PETITION UNDER 37 CFR 1.138(d)

The declaration of express abandonment is recognized

This is in response to the petition under 37 CFR 1.138(d), requesting for a refund of any previously paid search fee and excess claims fee in the above-identified application.

The petition is granted.

The express abandonment is recognized. Any previously paid search fee and excess claims fee are hereby refunded.

Telephone inquiries should be directed to the Office of Data Management at (571) 272-4200.

Patent Publication Branch
Office of Data Management

Adjustment date: 08/17/2009 BPOWELL
05/05/2006 STEUREL1 00000077 11418938
02 FC:1111 -500.00 OP
04 FC:1202 -200.00 OP
05 FC:1201 -200.00 OP

Adjustment date: 08/17/2009 BPOWELL
05/05/2006 STEUREL1 00000077 11418938
02 FC:1111 -500.00 OP
04 FC:1202 -200.00 OP
05 FC:1201 -200.00 OP

FORM PET651G (Rev. 08/07)

UNITED STATES PATENT AND TRADEMARK OFFICE

Commissioner for Patents
United States Patent and Trademark Office
P.O. Box 1450
Alexandria, VA 22313-1450
www.uspto.gov

ROPES & GRAY LLP
PATENT DOCKETING 39/361
1211 AVENUE OF THE AMERICAS
NEW YORK, NY 10036-8704

COPY MAILED
APR 01 2008
OFFICE OF PETITIONS

In re Application of	:	
Dean ALDERUCCI, et al	:	
Application No. 11/418,939	:	DECISION ON PETITION
Filed: May 5, 2006	:	TO WITHDRAW
Attorney Docket No. P-060505.01	:	FROM RECORD
	:	

This is a decision on the Request to Withdraw as attorney or agent of record under 37 C.F.R. § 1.36(b), filed February 19, 2008.

The request is **APPROVED**.

A grantable request to withdraw as attorney/agent of record must be signed by every attorney/agent seeking to withdraw or contain a clear indication that one attorney is signing on behalf of another/others. A request to withdraw will not be approved unless at least 30 (thirty) days would remain between the date of approval and the later of the expiration date of a time to file a response or the expiration date of the maximum time period which can be extended under 37 C.F.R. § 1.136(a).

The request was signed by Laurence S. Rogers on behalf of all attorneys/agents of record.

All attorneys/agents of record have been withdrawn.

Applicant is reminded that there is no attorney of record at this time.

The correspondence of record has been changed and the new correspondence address is the first copied address below until otherwise properly notified by the applicant.

In order to request or take action in a patent matter, the assignee must establish its ownership of the patent to the satisfaction of the Director. In this regard, a Statement under 37 CFR 3.73(b) must have either: (i) documentary evidence of a chain of title from the original owner to the assignee

(*e.g.*, copy of an executed assignment), and a statement affirming that the documentary evidence of the chain of title from the original owner to the assignee was or concurrently is being submitted for recordation pursuant to § 3.11; or (ii) a statement specifying where documentary evidence of a chain of title from the original owner to the assignee is recorded in the assignment records of the Office (*e.g.*, reel and frame number).

There is an outstanding Office action mailed December 17, 2007 that requires a reply by the applicant.

Telephone inquiries concerning this decision should be directed to the undersigned at 571-272-6735.

Diane Goodwyn
Petitions Examiner
Office of Petitions

cc: DEAN ALDERUCCI
8 MARION ROAD
WESTPORT, CT 06880

DEAN P. ALDERUCCI
CANTOR FITZGERALD, L.P.
110 EAST 59TH STREET (6TH FLOOR)
NEW YORK, NY 10022

UNITED STATES PATENT AND TRADEMARK OFFICE

UNITED STATES DEPARTMENT OF COMMERCE
United States Patent and Trademark Office
Address: COMMISSIONER FOR PATENTS
P.O. Box 1450
Alexandria, Virginia 22313-1450
www.uspto.gov

APPLICATION NUMBER	FILING OR 371(C) DATE	FIRST NAMED APPLICANT	ATTY. DOCKET NO./TITLE
11/418,939	05/05/2006	Dean Alderucci	P.060505.01.

CONFIRMATION NO. 1905

POWER OF ATTORNEY NOTICE

1473
ROPES & GRAY LLP
PATENT DOCKETING 39/361
1211 AVENUE OF THE AMERICAS
NEW YORK, NY 10036-8704

OC000000029188094

Date Mailed: 04/01/2008

NOTICE REGARDING CHANGE OF POWER OF ATTORNEY

This is in response to the Power of Attorney filed 02/19/2008.

- The withdrawal as attorney in this application has been accepted. Future correspondence will be mailed to the new address of record. 37 CFR 1.33.

/dcgoodwyn/

Office of Initial Patent Examination (571) 272-4000 or 1-800-PTO-9199

UNITED STATES PATENT AND TRADEMARK OFFICE

Commissioner for Patents
United States Patent and Trademark Office
P.O. Box 1450
Alexandria, VA 22313-1450
www.uspto.gov

Townsend and Townsend and Crew, LLP
Two Embarcadero Center
Eighth Floor
San Francisco, CA 94111-3834

COPY MAILED

MAR 17 2008

OFFICE OF PETITIONS

In re Application of	:	
Zhixian Xiang	:	
Application No. 11/418,942	:	DECISION ON PETITION
Filed: May 4, 2006	:	TO WITHDRAW
Attorney Docket No. HW 05FW008	:	FROM RECORD

This is a decision on the Request to Withdraw as attorney or agent of record under 37 C.F.R. § 1.36(b), filed November 12, 2007.

The request is **NOT APPROVED** because it is moot.

A review of the file record indicates that the power of attorney to Townsend and Townsend and Crew, LLP has been revoked by the assignee of the patent application on January 2, 2008. Accordingly, the request to withdraw under 37 C.F.R. § 1.36(b) is moot.

All future communications from the Office will continue to be directed to the below-listed address until otherwise notified by applicant.

Telephone inquires concerning this decision should be directed to Terri Williams at 571-272-2991.

T. Williams

Terri Williams
Petitions Examiner
Office of Petitions

cc: **Slater & Matsil, LLP**
17950 Preston Road, Suite 1000
Dallas, TX 75252

UNITED STATES PATENT AND TRADEMARK OFFICE

Commissioner for Patents
United States Patent and Trademark Office
P.O. Box 1450
Alexandria, VA 22313-1450
www.uspto.gov

FOX ROTHSCHILD LLP
PRINCETON PIKE CORPORATE CENTER
997 LENOX DRIVE
BLDG. #3
LAWRENCEVILLE, NJ 08648

COPY MAILED
FEB 18 2010

In re Application of	:	
Joachim B. Kohn, et al.	:	
Application No. 11/418,943	:	ON PETITION
Filed: May 5, 2006	:	
Attorney Docket No. P22,591-C US1	:	
	:	

This is a decision on the petition under 37 CFR 1.137(b), filed December 8, 2009, to revive the above-identified application.

The petition is **GRANTED**.

The application became abandoned for failure to timely reply within the meaning of 37 CFR 1.113 to the final Office action, mailed June 5, 2009, which set a shortened statutory period for reply of three (3) months. No extension of time under the provisions of 37 CFR 1.136(a) was obtained. Accordingly, the application became abandoned on September 6, 2009. On December 8, 2009, the present petition was filed. A Notice of Abandonment was subsequently mailed on January 27, 2010.

The petition satisfies the requirements of 37 CFR 1.137(b) in that petitioner has supplied (1) the reply in the form of a Request for Continued Examination (RCE), including the fee of $810 and the submission required by 37 CFR 1.114; (2) the petition fee of $1,620; and (3) an adequate statement of unintentional delay.

This application is being referred to Technology Center AU 1618 for processing of the RCE and for appropriate action by the Examiner in the normal course of business on the amendment submitted in accordance with 37 CFR 1.114.

Telephone inquiries concerning this decision should be directed to the undersigned at (571) 272-3204. Inquiries relating to further prosecution should be directed to the Technology Center.

Sherry D. Brinkley
Petitions Examiner
Office of Petitions

UNITED STATES PATENT AND TRADEMARK OFFICE

UNITED STATES DEPARTMENT OF COMMERCE
United States Patent and Trademark Office
Address: COMMISSIONER FOR PATENTS
P.O. Box 1450
Alexandria, Virginia 22313-1450
www.uspto.gov

TEXAS INSTRUMENTS INCORPORATED
P O BOX 655474, M/S 3999
DALLAS, TX 75265

Mail Date: 05/10/2010

Applicant	: Andrew Huibers	: DECISION ON REQUEST FOR
Patent Number	: 7636190	: RECALCULATION of PATENT
Issue Date	: 12/22/2009	: TERM ADJUSTMENT IN VIEW
Application No	: 11/418,968	: OF WYETH AND NOTICE OF INTENT TO
Filed	: 05/05/2006	: ISSUE CERTIFICATE OF CORRECTION
		:

The Request for Recalculation is **GRANTED** to the extent indicated.

The patent term adjustment has been determined to be **187** days. The USPTO will *sua sponte* issue a certificate of correction reflecting the amount of PTA days determined by the recalculation.

Prior to the issuance of the certificate of correction, the USPTO will afford patentee an opportunity to be heard and request reconsideration. Accordingly, patentee has **one month or thirty (30) days**, whichever is longer, to file a request for reconsideration of this patent term adjustment calculation. See 35 U.S.C. 154(b)(3)(B)(ii) and 37 CFR 1.322(a)(4). No extensions of time will be granted under 37 CFR 1.136.

Patentee should use document code PET.OP if electronically filing a request for reconsideration of this patent term adjustment calculation. The patentee must also include the information required by 37 CFR 1.705(b)(2) and the fee required by 37 CFR 1.18(e). If patentee does not file a timely request for reconsideration of this patent term adjustment calculation including the information required by 37 CFR 1.705(b)(2) and the fee required by 37 CFR 1.18(e), the USPTO will issue a certificate of correction reflecting the PTA determination noted above.

Patentee should be aware that in order to preserve the right to review in the United States District Court for the District of Columbia of the USPTO patent term adjustment determination, patentee must ensure that he or she also take the steps required under 35 U.S.C. 154(b)(4)(A) in a timely manner. Nothing in the request for recalculation should be construed as providing an alternative time frame for commencing a civil action under 35 U.S.C. 154(b)(4)(A).

Any questions concerning this decision should be directed to the Office of Patent Legal Administration at 571-272-7702.

UNITED STATES PATENT AND TRADEMARK OFFICE

UNITED STATES DEPARTMENT OF COMMERCE
United States Patent and Trademark Office
Address: COMMISSIONER FOR PATENTS
P.O. Box 1450
Alexandria, Virginia 22313-1450
www.uspto.gov

Susan M. Donahue
Rockwell Automation, Inc./FY
1201 South Second Street
E-7F19
Milwaukee, WI 53204

Mail Date: 04/20/2010

Applicant	: Eric J. Hartman	: DECISION ON REQUEST FOR
Patent Number	: 7599897	: RECALCULATION of PATENT
Issue Date	: 10/06/2009	: TERM ADJUSTMENT IN VIEW
Appliction No	: 11/418,971	: OF WYETH AND NOTICE OF INTENT TO
Filed	: 05/05/2006	: ISSUE CERTIFICATE OF CORRECTION
		:

The Request for Recalculation is **GRANTED** to the extent indicated.

The patent term adjustment has been determined to be **457** days. The USPTO will *sua sponte* issue a certificate of correction reflecting the amount of PTA days determined by the recalculation.

Prior to the issuance of the certificate of correction, the USPTO will afford patentee an opportunity to be heard and request reconsideration. Accordingly, patentee has **one month or thirty (30) days**, whichever is longer, to file a request for reconsideration of this patent term adjustment calculation. See 35 U.S.C. 154(b)(3)(B)(ii) and 37 CFR 1.322(a)(4). No extensions of time will be granted under 37 CFR 1.136.

Patentee should use document code PET.OP if electronically filing a request for reconsideration of this patent term adjustment calculation. The patentee must also include the information required by 37 CFR 1.705(b)(2) and the fee required by 37 CFR 1.18(e). If patentee does not file a timely request for reconsideration of this patent term adjustment calculation including the information required by 37 CFR 1.705(b)(2) and the fee required by 37 CFR 1.18(e), the USPTO will issue a certificate of correction reflecting the PTA determination noted above.

Patentee should be aware that in order to preserve the right to review in the United States District Court for the District of Columbia of the USPTO patent term adjustment determination, patentee must ensure that he or she also take the steps required under 35 U.S.C. 154(b)(4)(A) in a timely manner. Nothing in the request for recalculation should be construed as providing an alternative time frame for commencing a civil action under 35 U.S.C. 154(b)(4)(A).

Any questions concerning this decision should be directed to the Office of Patent Legal Administration at 571-272-7702.

UNITED STATES PATENT AND TRADEMARK OFFICE

UNITED STATES DEPARTMENT OF COMMERCE
United States Patent and Trademark Office
Address: COMMISSIONER FOR PATENTS
P.O. Box 1450
Alexandria, Virginia 22313-1450
www.uspto.gov

PVF -- SUN MICROSYSTEMS INC.
C/O PARK, VAUGHAN & FLEMING LLP
2820 FIFTH STREET
DAVIS, CA 95618-7759

Mail Date: 04/21/2010

Applicant	: Arthur R. Zingher	: DECISION ON REQUEST FOR
Patent Number	: 7649245	: RECALCULATION of PATENT
Issue Date	: 01/19/2010	: TERM ADJUSTMENT IN VIEW
Appliction No	: 11/418,985	: OF WYETH AND NOTICE OF INTENT TO
Filed	: 05/04/2006	: ISSUE CERTIFICATE OF CORRECTION
		:

The Request for Recalculation is **GRANTED** to the extent indicated.

The patent term adjustment has been determined to be **656** days. The USPTO will *sua sponte* issue a certificate of correction reflecting the amount of PTA days determined by the recalculation.

Prior to the issuance of the certificate of correction, the USPTO will afford patentee an opportunity to be heard and request reconsideration. Accordingly, patentee has **one month or thirty (30) days**, whichever is longer, to file a request for reconsideration of this patent term adjustment calculation. See 35 U.S.C. 154(b)(3)(B)(ii) and 37 CFR 1.322(a)(4). No extensions of time will be granted under 37 CFR 1.136.

Patentee should use document code PET.OP if electronically filing a request for reconsideration of this patent term adjustment calculation. The patentee must also include the information required by 37 CFR 1.705(b)(2) and the fee required by 37 CFR 1.18(e). If patentee does not file a timely request for reconsideration of this patent term adjustment calculation including the information required by 37 CFR 1.705(b)(2) and the fee required by 37 CFR 1.18(e), the USPTO will issue a certificate of correction reflecting the PTA determination noted above.

Patentee should be aware that in order to preserve the right to review in the United States District Court for the District of Columbia of the USPTO patent term adjustment determination, patentee must ensure that he or she also take the steps required under 35 U.S.C. 154(b)(4)(A) in a timely manner. Nothing in the request for recalculation should be construed as providing an alternative time frame for commencing a civil action under 35 U.S.C. 154(b)(4)(A).

Any questions concerning this decision should be directed to the Office of Patent Legal Administration at 571-272-7702.

UNITED STATES PATENT AND TRADEMARK OFFICE

UNITED STATES DEPARTMENT OF COMMERCE
United States Patent and Trademark Office
Address: COMMISSIONER FOR PATENTS
P.O. Box 1450
Alexandria, Virginia 22313-1450
www.uspto.gov

PVF -- SUN MICROSYSTEMS INC.
C/O PARK, VAUGHAN & FLEMING LLP
2820 FIFTH STREET
DAVIS, CA 95618-7759

Mail Date: 04/21/2010

Applicant	: Arthur R. Zingher	: DECISION ON REQUEST FOR
Patent Number	: 7671449	: RECALCULATION of PATENT
Issue Date	: 03/02/2010	: TERM ADJUSTMENT IN VIEW
Appliction No	: 11/418,986	: OF WYETH
Filed	: 05/04/2006	:
		:

The Patentee's Request for Recalculation is **DISMISSED.**

This Request is deemed ineligible for consideration for one or more of the following reasons:

(A). The patent for which PTA recalculation is requested is either a design or reissue application or is a reexamination proceeding;

(B). The patent for which PTA recalculation is requested resulted from a utility or plant application filed under 35 USC 111(a) before May 29, 2000 and no CPA filed in the application on/after May 29, 2000;

(C). The patent for which PTA recalculation is requested resulted from an international application in which the international filing date was before May 29, 2000 and no CPA filed in the application on/after May 29, 2000;

(D). The patent for which PTA recalculation is requested issued on/after March 2, 2010;

(E). The Request for Recalculation was filed more than 180 days after the grant date of the patent and the request was not filed within two months of a dismissal of a request for reconsideration of the of the patent term under 37 CFR 1.705(d);

(F). The Request for Recalculation is not solely limited to USPTO pre-Wyeth interpretation of 35 U.S.C. 154(b)(2)(A);

or

(G). A civil action was filed pursuant to 35 U.S.C. 154(b)(4)(A)concerning the same patent at issue in this request.

Patentee may file a reply to this decision dismissing the Request for Recalculation. Patentee must file such reply within one month or thirty days, whichever is longer, of the mail date of the decision dismissing the Request for Recalculation. No fee is required if patentee is asserting in the reply that the dismissal for ineligibility is improper.

Patentee should use document code PET.OP if electronically filing a reply to this dismissal. If the USPTO finds that the request was improperly deemed ineligible, the USPTO will mail applicant a recalculation determination.

Patentee should be aware that in order to preserve the right to review in the United States District Court for the District of Columbia of the USPTO patent term adjustment determination, patentee must ensure that he or she also take the steps required under 35 U.S.C. 154(b)(4)(A). Nothing in the request for recalculation should be construed as providing an alternative time frame for commencing a civil action under 35 U.S.C. 154 (b)(4)(A).

Any questions concerning this decision should be directed to the Office of Patent Legal Administration at 571-272-7702.

UNITED STATES PATENT AND TRADEMARK OFFICE

Commissioner for Patents
United States Patent and Trademark Office
P.O. Box 1450
Alexandria, VA 22313-1450
www.uspto.gov

FISH & RICHARDSON PC
P.O. BOX 1022
MINNEAPOLIS, MN 55440-1022

MAILED

MAY 19 2010

OFFICE OF PETITIONS

In re Application of	:	
Arkady Pittel, et al.	:	
Application No. 11/418,987	:	DECISION ON PETITION
Filed: May 4, 2006	:	TO WITHDRAW
Attorney Docket No. 19965-012001	:	FROM RECORD
	:	

This is a decision on the Request to Withdraw as attorney or agent of record under 37 C.F.R. § 1.36(b), filed March 16, 2010.

The request is **APPROVED**.

A grantable request to withdraw as attorney/agent of record must be signed by every attorney/agent seeking to withdraw or contain a clear indication that one attorney is signing on behalf of another/others. A request to withdraw will not be approved unless at least 30 (thirty) days would remain between the date of approval and the later of the expiration date of a time to file a response or the expiration date of the maximum time period which can be extended under 37 C.F.R. § 1.136(a).

The request was signed by David L. Feigenbaum on behalf of all attorneys of record. All attorneys/agents have been withdrawn. Applicant is reminded that there is no attorney of record at this time.

All future correspondence will be directed to the first named inventor Arkady Pittel at the address indicated below.

There is an outstanding Notice of Allowance and Fee(s) Due action mailed March 15, 2010 that requires the issue and publication fee payment from the applicant.

Telephone inquiries concerning this decision should be directed to Terri Johnson at 571-272-2991.

Terri Johnson
Petitions Examiner
Office of Petitions

cc: **Arkady Pittel**
101 Winthrop Road
Suite 1
Brookline, MA 02445

UNITED STATES PATENT AND TRADEMARK OFFICE

UNITED STATES DEPARTMENT OF COMMERCE
United States Patent and Trademark Office
Address: COMMISSIONER FOR PATENTS
P.O. Box 1450
Alexandria, Virginia 22313-1450
www.uspto.gov

APPLICATION NUMBER	FILING OR 371(C) DATE	FIRST NAMED APPLICANT	ATTY. DOCKET NO./TITLE
11/418,987	05/04/2006	Arkady Pittel	19965-012001

CONFIRMATION NO. 2642

POWER OF ATTORNEY NOTICE

26161
FISH & RICHARDSON PC
P.O. BOX 1022
MINNEAPOLIS, MN 55440-1022

OC000000041690051

Date Mailed: 05/19/2010

NOTICE REGARDING CHANGE OF POWER OF ATTORNEY

This is in response to the Power of Attorney filed 03/16/2010.

- The withdrawal as attorney in this application has been accepted. Future correspondence will be mailed to the new address of record. 37 CFR 1.33.

/tsjohnson/

Office of Data Management, Application Assistance Unit (571) 272-4000, or (571) 272-4200, or 1-888-786-0101

UNITED STATES PATENT AND TRADEMARK OFFICE

UNITED STATES DEPARTMENT OF COMMERCE
United States Patent and Trademark Office
Address: COMMISSIONER FOR PATENTS
P.O. Box 1450
Alexandria, Virginia 22313-1450
www.uspto.gov

KLARQUIST SPARKMAN LLP
121 S.W. SALMON STREET
SUITE 1600
PORTLAND, OR 97204

Mail Date: 04/21/2010

Applicant	: Jordi Ribas-Corbera	: DECISION ON REQUEST FOR
Patent Number	: 7593466	: RECALCULATION of PATENT
Issue Date	: 09/22/2009	: TERM ADJUSTMENT IN VIEW
Appliction No	: 11/418,995	: OF WYETH AND NOTICE OF INTENT TO
Filed	: 05/04/2006	: ISSUE CERTIFICATE OF CORRECTION
		:

The Request for Recalculation is **GRANTED** to the extent indicated.

The patent term adjustment has been determined to be **450** days. The USPTO will *sua sponte* issue a certificate of correction reflecting the amount of PTA days determined by the recalculation.

Prior to the issuance of the certificate of correction, the USPTO will afford patentee an opportunity to be heard and request reconsideration. Accordingly, patentee has **one month or thirty (30) days**, whichever is longer, to file a request for reconsideration of this patent term adjustment calculation. See 35 U.S.C. 154(b)(3)(B)(ii) and 37 CFR 1.322(a)(4). No extensions of time will be granted under 37 CFR 1.136.

Patentee should use document code PET.OP if electronically filing a request for reconsideration of this patent term adjustment calculation. The patentee must also include the information required by 37 CFR 1.705(b)(2) and the fee required by 37 CFR 1.18(e). If patentee does not file a timely request for reconsideration of this patent term adjustment calculation including the information required by 37 CFR 1.705(b)(2) and the fee required by 37 CFR 1.18(e), the USPTO will issue a certificate of correction reflecting the PTA determination noted above.

Patentee should be aware that in order to preserve the right to review in the United States District Court for the District of Columbia of the USPTO patent term adjustment determination, patentee must ensure that he or she also take the steps required under 35 U.S.C. 154(b)(4)(A) in a timely manner. Nothing in the request for recalculation should be construed as providing an alternative time frame for commencing a civil action under 35 U.S.C. 154(b)(4)(A).

Any questions concerning this decision should be directed to the Office of Patent Legal Administration at 571-272-7702.

UNITED STATES PATENT AND TRADEMARK OFFICE

UNITED STATES DEPARTMENT OF COMMERCE
United States Patent and Trademark Office
Address: COMMISSIONER FOR PATENTS
P.O. Box 1450
Alexandria, Virginia 22313-1450
www.uspto.gov

BANNER & WITCOFF, LTD.
28 STATE STREET
SUITE 1800
BOSTON, MA 02109-1701

Mail Date: 04/21/2010

Applicant	: Steven F. Smith	: DECISION ON REQUEST FOR
Patent Number	: 7624517	: RECALCULATION of PATENT
Issue Date	: 12/01/2009	: TERM ADJUSTMENT IN VIEW
Appliction No	: 11/419,014	: OF WYETH AND NOTICE OF INTENT TO
Filed	: 05/18/2006	: ISSUE CERTIFICATE OF CORRECTION
		:

The Request for Recalculation is **GRANTED** to the extent indicated.

The patent term adjustment has been determined to be **867** days. The USPTO will *sua sponte* issue a certificate of correction reflecting the amount of PTA days determined by the recalculation.

Prior to the issuance of the certificate of correction, the USPTO will afford patentee an opportunity to be heard and request reconsideration. Accordingly, patentee has **one month or thirty (30) days**, whichever is longer, to file a request for reconsideration of this patent term adjustment calculation. See 35 U.S.C. 154(b)(3)(B)(ii) and 37 CFR 1.322(a)(4). No extensions of time will be granted under 37 CFR 1.136.

Patentee should use document code PET.OP if electronically filing a request for reconsideration of this patent term adjustment calculation. The patentee must also include the information required by 37 CFR 1.705(b)(2) and the fee required by 37 CFR 1.18(e). If patentee does not file a timely request for reconsideration of this patent term adjustment calculation including the information required by 37 CFR 1.705(b)(2) and the fee required by 37 CFR 1.18(e), the USPTO will issue a certificate of correction reflecting the PTA determination noted above.

Patentee should be aware that in order to preserve the right to review in the United States District Court for the District of Columbia of the USPTO patent term adjustment determination, patentee must ensure that he or she also take the steps required under 35 U.S.C. 154(b)(4)(A) in a timely manner. Nothing in the request for recalculation should be construed as providing an alternative time frame for commencing a civil action under 35 U.S.C. 154(b)(4)(A).

Any questions concerning this decision should be directed to the Office of Patent Legal Administration at 571-272-7702.

UNITED STATES PATENT AND TRADEMARK OFFICE

Commissioner for Patents
United States Patent and Trademark Office
P.O. Box 1450
Alexandria, VA 22313-1450
www.uspto.gov

BASF CORPORATION
CARL-BOSCH-STRASSE 38
LUDWIGSHAFEN D6705-6 DE GERMANY

MAILED
JUN 07 2010
OFFICE OF PETITIONS

In re Application of :
Nocha Van Thielen et al. :
Application No. 11/419,016 : DECISION ON PETITION
Filed: May 18, 2006 :
Attorney Docket No. **15096-03** :

This is a decision on the petition under the unintentional provisions of 37 CFR 1.137(b), filed May 3, 2010, to revive the above-identified application.

The petition is **GRANTED**.

This application became abandoned for failure to timely submit formal drawings on or before March 29, 2010, as required by the Notice of Allowability, mailed December 29, 2009.

The petition satisfies the requirements of 37 CFR 1.137(b) in that petitioner has supplied (1) the reply in the form of corrected formal drawings , (2) the petition fee of $810; and (3) a proper statement of unintentional delay.

Telephone inquiries concerning this decision should be directed to JoAnne Burke at 571-272-4584.

This application is being referred to the Office of Data Management for processing into a patent.

/JoAnne Burke/
JoAnne Burke
Petitions Examiner
Office of Petitions

UNITED STATES PATENT AND TRADEMARK OFFICE

UNITED STATES DEPARTMENT OF COMMERCE
United States Patent and Trademark Office
Address: COMMISSIONER FOR PATENTS
P.O. Box 1450
Alexandria, Virginia 22313-1450
www.uspto.gov

DALY, CROWLEY, MOFFORD & DURKEE, LLP
SUITE 301A
354A TURNPIKE STREET
CANTON, MA 02021-2714

Mail Date: 05/28/2010

Applicant	: Peter Neil Moss	: DECISION ON REQUEST FOR
Patent Number	: 7627287	: RECALCULATION of PATENT
Issue Date	: 12/01/2009	: TERM ADJUSTMENT IN VIEW
Application No	: 11/419,059	: OF WYETH AND NOTICE OF INTENT TO
Filed	: 05/18/2006	: ISSUE CERTIFICATE OF CORRECTION
		:

The Request for Recalculation is **GRANTED** to the extent indicated.

The patent term adjustment has been determined to be **654** days. The USPTO will *sua sponte* issue a certificate of correction reflecting the amount of PTA days determined by the recalculation.

Prior to the issuance of the certificate of correction, the USPTO will afford patentee an opportunity to be heard and request reconsideration. Accordingly, patentee has **one month or thirty (30) days**, whichever is longer, to file a request for reconsideration of this patent term adjustment calculation. See 35 U.S.C. 154(b)(3)(B)(ii) and 37 CFR 1.322(a)(4). No extensions of time will be granted under 37 CFR 1.136.

Patentee should use document code PET.OP if electronically filing a request for reconsideration of this patent term adjustment calculation. The patentee must also include the information required by 37 CFR 1.705(b)(2) and the fee required by 37 CFR 1.18(e). If patentee does not file a timely request for reconsideration of this patent term adjustment calculation including the information required by 37 CFR 1.705(b)(2) and the fee required by 37 CFR 1.18(e), the USPTO will issue a certificate of correction reflecting the PTA determination noted above.

Patentee should be aware that in order to preserve the right to review in the United States District Court for the District of Columbia of the USPTO patent term adjustment determination, patentee must ensure that he or she also take the steps required under 35 U.S.C. 154(b)(4)(A) in a timely manner. Nothing in the request for recalculation should be construed as providing an alternative time frame for commencing a civil action under 35 U.S.C. 154(b)(4)(A).

Any questions concerning this decision should be directed to the Office of Patent Legal Administration at 571-272-7702.

UNITED STATES PATENT AND TRADEMARK OFFICE

COMMISSIONER FOR PATENTS
UNITED STATES PATENT AND TRADEMARK OFFICE
P.O. BOX 1450
ALEXANDRIA, VA 22313-1450
www.uspto.gov

Pepper Hamilton, LLP
One Mellon Center, 50th Floor
500 Grant Street
Pittsburgh, PA 15219

COPY MAILED

FEB 0 2 2009

OFFICE OF PETITIONS

In re Application of :
Mukul Rastogi et al. :
Application No. 11/419,064 : DECISION ON PETITION
Filed: May 18, 2006 :
Attorney Docket No. 2005P8805US01- :
100530.0020

This is a decision on the petition under 37 CFR 1.137(b), filed September 17, 2008, to revive the above-identified application.

The petition is **GRANTED**.

This application became abandoned for failure to timely pay the issue and publication fees on or before July 10, 2008, as required by the Notice of Allowance and Fee(s) Due, mailed April 10, 2008. Accordingly, the date of abandonment of this application is July 11, 2008. A Notice of Abandonment was mailed on August 8, 2008.

The petition satisfies the requirements of 37 CFR 1.137(b) in that petitioner has supplied (1) the reply in the form of payment of the issue fee of $1510 and the publication fee of $300, (2) the petition fee of $1540, and (3) a proper statement of unintentional delay. Accordingly, the issue and publication fees are accepted as being unintentionally delayed.

Applicant should note that the issue fee charged to deposit account 50-0436 reflected an increase due to our fee changes that were effective as of October 2, 2008.

Telephone inquiries concerning this decision should be directed to Kimberly Inabinet at (571) 272-4618.

This application is being referred to the Office of Data Management for further processing into a patent.

Carl Friedman
Petitions Examiner
Office of Petitions

UNITED STATES PATENT AND TRADEMARK OFFICE

UNITED STATES DEPARTMENT OF COMMERCE
United States Patent and Trademark Office
Address: COMMISSIONER FOR PATENTS
P.O. Box 1450
Alexandria, Virginia 22313-1450
www.uspto.gov

APPLICATION NO.	FILING DATE	FIRST NAMED INVENTOR	ATTORNEY DOCKET NO.	CONFIRMATION NO.
11/419,076	05/18/2006	Kazuyoshi Shimomura	291340US2S	8710

7590 05/05/2009
OBLON, SPIVAK, MCCLELLAND MAIER & NEUSTADT, P.C.
1940 DUKE STREET
ALEXANDRIA, VA 22314

EXAMINER
TRAN, THAI Q

ART UNIT	PAPER NUMBER
2621	

NOTIFICATION DATE	DELIVERY MODE
05/05/2009	ELECTRONIC

DECISION GRANTING PETITION UNDER 37 CFR 1.138(d)

The declaration of express abandonment is recognized

This is in response to the petition under 37 CFR 1.138(d), requesting for a refund of any previously paid search fee and excess claims fee in the above-identified application.

The petition is granted.

The express abandonment is recognized. Any previously paid search fee and excess claims fee are hereby refunded.

Telephone inquiries should be directed to the Office of Data Management at (571) 272-4200.

Nimi Farmer

Patent Publication Branch
Office of Data Management

Refund Ref:
05/05/2009 0030069704

Credit Card Refund Total: $500.00

AD Exp..: XXXXXXXXXXX1001

Adjustment date: 05/05/2009 NFARMER
05/19/2006 INTEFSW 00000069 11419076
02 FC:1111 -500.00 OP

FORM PET651G (Rev. 08/07)

UNITED STATES PATENT AND TRADEMARK OFFICE

UNITED STATES DEPARTMENT OF COMMERCE
United States Patent and Trademark Office
Address: COMMISSIONER FOR PATENTS
P.O. Box 1450
Alexandria, Virginia 22313-1450
www.uspto.gov

SENNIGER POWERS LLP
100 NORTH BROADWAY
17TH FLOOR
ST LOUIS, MO 63102

Mail Date: 04/20/2010

Applicant	: Larry Steven Gagne	: DECISION ON REQUEST FOR
Patent Number	: 7575261	: RECALCULATION of PATENT
Issue Date	: 08/18/2009	: TERM ADJUSTMENT IN VIEW
Appliction No	: 11/419,094	: OF WYETH AND NOTICE OF INTENT TO
Filed	: 05/18/2006	: ISSUE CERTIFICATE OF CORRECTION
		:

The Request for Recalculation is **GRANTED** to the extent indicated.

The patent term adjustment has been determined to be **318** days. The USPTO will *sua sponte* issue a certificate of correction reflecting the amount of PTA days determined by the recalculation.

Prior to the issuance of the certificate of correction, the USPTO will afford patentee an opportunity to be heard and request reconsideration. Accordingly, patentee has **one month or thirty (30) days**, whichever is longer, to file a request for reconsideration of this patent term adjustment calculation. See 35 U.S.C. 154(b)(3)(B)(ii) and 37 CFR 1.322(a)(4). No extensions of time will be granted under 37 CFR 1.136.

Patentee should use document code PET.OP if electronically filing a request for reconsideration of this patent term adjustment calculation. The patentee must also include the information required by 37 CFR 1.705(b)(2) and the fee required by 37 CFR 1.18(e). If patentee does not file a timely request for reconsideration of this patent term adjustment calculation including the information required by 37 CFR 1.705(b)(2) and the fee required by 37 CFR 1.18(e), the USPTO will issue a certificate of correction reflecting the PTA determination noted above.

Patentee should be aware that in order to preserve the right to review in the United States District Court for the District of Columbia of the USPTO patent term adjustment determination, patentee must ensure that he or she also take the steps required under 35 U.S.C. 154(b)(4)(A) in a timely manner. Nothing in the request for recalculation should be construed as providing an alternative time frame for commencing a civil action under 35 U.S.C. 154(b)(4)(A).

Any questions concerning this decision should be directed to the Office of Patent Legal Administration at 571-272-7702.

UNITED STATES PATENT AND TRADEMARK OFFICE

UNITED STATES DEPARTMENT OF COMMERCE
United States Patent and Trademark Office
Address: COMMISSIONER FOR PATENTS
P.O. Box 1450
Alexandria, Virginia 22313-1450
www.uspto.gov

SCHLUMBERGER TECHNOLOGY CORPORATION
David Cate
IP DEPT., WELL STIMULATION
110 SCHLUMBERGER DRIVE, MD1
SUGAR LAND, TX 77478

Mail Date: 04/20/2010

Applicant	: Bartley J. Patton	: DECISION ON REQUEST FOR
Patent Number	: 7600585	: RECALCULATION of PATENT
Issue Date	: 10/13/2009	: TERM ADJUSTMENT IN VIEW
Appliction No	: 11/419,100	: OF WYETH AND NOTICE OF INTENT TO
Filed	: 05/18/2006	: ISSUE CERTIFICATE OF CORRECTION
		:

The Request for Recalculation is **GRANTED** to the extent indicated.

The patent term adjustment has been determined to be **15** days. The USPTO will *sua sponte* issue a certificate of correction reflecting the amount of PTA days determined by the recalculation.

Prior to the issuance of the certificate of correction, the USPTO will afford patentee an opportunity to be heard and request reconsideration. Accordingly, patentee has **one month or thirty (30) days**, whichever is longer, to file a request for reconsideration of this patent term adjustment calculation. See 35 U.S.C. 154(b)(3)(B)(ii) and 37 CFR 1.322(a)(4). No extensions of time will be granted under 37 CFR 1.136.

Patentee should use document code PET.OP if electronically filing a request for reconsideration of this patent term adjustment calculation. The patentee must also include the information required by 37 CFR 1.705(b)(2) and the fee required by 37 CFR 1.18(e). If patentee does not file a timely request for reconsideration of this patent term adjustment calculation including the information required by 37 CFR 1.705(b)(2) and the fee required by 37 CFR 1.18(e), the USPTO will issue a certificate of correction reflecting the PTA determination noted above.

Patentee should be aware that in order to preserve the right to review in the United States District Court for the District of Columbia of the USPTO patent term adjustment determination, patentee must ensure that he or she also take the steps required under 35 U.S.C. 154(b)(4)(A) in a timely manner. Nothing in the request for recalculation should be construed as providing an alternative time frame for commencing a civil action under 35 U.S.C. 154(b)(4)(A).

Any questions concerning this decision should be directed to the Office of Patent Legal Administration at 571-272-7702.

UNITED STATES PATENT AND TRADEMARK OFFICE

UNITED STATES DEPARTMENT OF COMMERCE
United States Patent and Trademark Office
Address: COMMISSIONER FOR PATENTS
P.O. Box 1450
Alexandria, Virginia 22313-1450
www.uspto.gov

HEAD, JOHNSON & KACHIGIAN
228 W 17TH PLACE
TULSA, OK 74119

Mail Date: 04/21/2010

Applicant	: Bruce Eric Hudkins	: DECISION ON REQUEST FOR
Patent Number	: 7663022	: RECALCULATION of PATENT
Issue Date	: 02/16/2010	: TERM ADJUSTMENT IN VIEW
Appliction No	: 11/419,108	: OF WYETH AND NOTICE OF INTENT TO
Filed	: 05/18/2006	: ISSUE CERTIFICATE OF CORRECTION
		:

The Request for Recalculation is **GRANTED** to the extent indicated.

The patent term adjustment has been determined to be **506** days. The USPTO will *sua sponte* issue a certificate of correction reflecting the amount of PTA days determined by the recalculation.

Prior to the issuance of the certificate of correction, the USPTO will afford patentee an opportunity to be heard and request reconsideration. Accordingly, patentee has **one month or thirty (30) days**, whichever is longer, to file a request for reconsideration of this patent term adjustment calculation. See 35 U.S.C. 154(b)(3)(B)(ii) and 37 CFR 1.322(a)(4). No extensions of time will be granted under 37 CFR 1.136.

Patentee should use document code PET.OP if electronically filing a request for reconsideration of this patent term adjustment calculation. The patentee must also include the information required by 37 CFR 1.705(b)(2) and the fee required by 37 CFR 1.18(e). If patentee does not file a timely request for reconsideration of this patent term adjustment calculation including the information required by 37 CFR 1.705(b)(2) and the fee required by 37 CFR 1.18(e), the USPTO will issue a certificate of correction reflecting the PTA determination noted above.

Patentee should be aware that in order to preserve the right to review in the United States District Court for the District of Columbia of the USPTO patent term adjustment determination, patentee must ensure that he or she also take the steps required under 35 U.S.C. 154(b)(4)(A) in a timely manner. Nothing in the request for recalculation should be construed as providing an alternative time frame for commencing a civil action under 35 U.S.C. 154(b)(4)(A).

Any questions concerning this decision should be directed to the Office of Patent Legal Administration at 571-272-7702.

UNITED STATES PATENT AND TRADEMARK OFFICE

Commissioner for Patents
United States Patent and Trademark Office
P.O. Box 1450
Alexandria, VA 22313-1450
www.uspto.gov

SCHWEGMAN, LUNDBERG & WOESSNER, P.A.
P.O. BOX 2938
MINNEAPOLIS MN 55402

3/17/09

In re Application of:
BELALCAZAR, ANDRES
Serial No.: 11/419,120
Filed: May 18, 2006
Docket: 279.A60US1
Title: MONITORING FLUID IN A SUBJECT USING A WEIGHT SCALE

DECISION ON PETITION TO WITHDRAW OF HOLDING OF FINALITY

This is a decision on the petition filed on March 11, 2009 to withdraw the finality of the Office Action of December 12, 2008. The petition is being considered pursuant to 37 CFR 1.181 and no fee is required for the petition.

The petition is **DISMISSED as untimely and moot**.

In the March 11, 2009 petition, petitioner requests the finality of the Office action of December 12, 2008 be withdrawn because the applicant believes that the final rejection of December 12, 2008 is premature. In the petition, petitioner contends that the examiner's rejection of the amended independent claims amounts to presenting additional new grounds in the rejections. Therefore, the final rejection is improper. However, in response to the final Office action of December 12, 2008 and the Advisory Action of February 27, 2009, the applicants also filed a Request for Continuing Examination on March 11, 2009.

A review of the record shows that the instant petition was filed more than two months after the mailing date of the final Office action of December 12, 2008. Pursuant to 37 CFR 1.181(f)[1], the petition is not timely filed since the petition was not filed within two months of the action complained of. As the petition was not timely filed, the requested withdrawal of finality of the Office action of December 12, 2008 will not be granted. The final Office action of December 12, 2008 stands.

[1] 37 CFR 1.181(f): The mere filing of a petition will not stay any period for reply that may be running against the application, nor act as a stay of other proceedings. Any petition under this part not filed within two months of the mailing date of the action or notice from which relief is requested may be dismissed as untimely, except as otherwise provided. This two-month period is not extendable.

With respect to a Request for Continuing Examination, 37 CFR § 1.114(d) states: if an applicant timely files a submission and fee set forth in § 1.17(e), the Office will withdraw the finality of any Office action and the submission will be entered and considered.

A review of the record indicates that the applicants timely filed a submission and paid the fees set forth in § 1.17(e). Therefore the Request for Continuing Examination was entered, the finality of the Office Action mailed on December 12, 2008 was operatively withdrawn, and the applicants were able to argue the merits of the examiner's rejections in subsequent amendment of March 11, 2009.

In view of the record, petitioner's request to withdraw the finality of the Office action dated March 11, 2009 is dismissed as untimely and moot.

Any request for reconsideration of this decision must be submitted within TWO (2) MONTHS from the mail date of this decision, 37 CFR 1.181(f). No extension of time under 37 CFR 1.136(a) is permitted. The reconsideration request should include a cover letter entitled "Renewed Petition under 37 CFR 1.181". The application is being forwarded to the Supervisory Patent Examiner of Art Unit 3736 for consideration of the amendment filed with the RCE. Any inquiry regarding this decision should be directed to Henry Yuen, Special Programs Examiner, at (571) 272-4856.

PETITION DISMISSED AS UNTIMELY AND MOOT.

Donald T. Hajec, Director
Technology Center 3700

UNITED STATES PATENT AND TRADEMARK OFFICE

UNITED STATES DEPARTMENT OF COMMERCE
United States Patent and Trademark Office
Address: COMMISSIONER FOR PATENTS
P.O. Box 1450
Alexandria, Virginia 22313-1450
www.uspto.gov

SCHWEGMAN, LUNDBERG & WOESSNER, P.A.
P.O. BOX 2938
MINNEAPOLIS, MN 55402

Mail Date: 05/21/2010

Applicant	: Andres Belalcazar	: DECISION ON REQUEST FOR
Patent Number	: 7640056	: RECALCULATION of PATENT
Issue Date	: 12/29/2009	: TERM ADJUSTMENT IN VIEW
Application No	: 11/419,123	: OF WYETH AND NOTICE OF INTENT TO
Filed	: 05/18/2006	: ISSUE CERTIFICATE OF CORRECTION
		:

The Request for Recalculation is **GRANTED** to the extent indicated.

The patent term adjustment has been determined to be **93** days. The USPTO will *sua sponte* issue a certificate of correction reflecting the amount of PTA days determined by the recalculation.

Prior to the issuance of the certificate of correction, the USPTO will afford patentee an opportunity to be heard and request reconsideration. Accordingly, patentee has **one month or thirty (30) days**, whichever is longer, to file a request for reconsideration of this patent term adjustment calculation. See 35 U.S.C. 154(b)(3)(B)(ii) and 37 CFR 1.322(a)(4). No extensions of time will be granted under 37 CFR 1.136.

Patentee should use document code PET.OP if electronically filing a request for reconsideration of this patent term adjustment calculation. The patentee must also include the information required by 37 CFR 1.705(b)(2) and the fee required by 37 CFR 1.18(e). If patentee does not file a timely request for reconsideration of this patent term adjustment calculation including the information required by 37 CFR 1.705(b)(2) and the fee required by 37 CFR 1.18(e), the USPTO will issue a certificate of correction reflecting the PTA determination noted above.

Patentee should be aware that in order to preserve the right to review in the United States District Court for the District of Columbia of the USPTO patent term adjustment determination, patentee must ensure that he or she also take the steps required under 35 U.S.C. 154(b)(4)(A) in a timely manner. Nothing in the request for recalculation should be construed as providing an alternative time frame for commencing a civil action under 35 U.S.C. 154(b)(4)(A).

Any questions concerning this decision should be directed to the Office of Patent Legal Administration at 571-272-7702.

UNITED STATES PATENT AND TRADEMARK OFFICE

Commissioner for Patents
United States Patent and Trademark Office
P.O. Box 1450
Alexandria, VA 22313-1450
www.uspto.gov

FENWICK AND WEST LLP
801 CALIFORNIA STREET
SILICON VALLEY CENTER
MOUNTAIN VIEW, CA 94041

COPY MAILED

DEC 19 2006

OFFICE OF PETITIONS

In re Application of	:	
SATTERFIELD, et al.	:	
Application No. 11/419125	:	DECISION ON PETITION
Filed: May 18, 2006	:	TO WITHDRAW
Attorney Docket No. 205140 (5024-00328)	:	FROM RECORD
	:	

This is a decision on the Request to Withdraw as attorney or agent under 37 C.F.R. § 1.36(b) filed October 12, 2006.

The request is **NOT APPROVED**.

A review of the file record indicates that Stuart P. Meyer of FENWICK AND WEST LLP does not have power of attorney in this patent application. See 37 C.F.R. § 10.40. Accordingly, the request to withdraw under 37 C.F.R. § 1.36(b) is not applicable.

All future communications from the Office will continue to be directed to the below-listed address until otherwise properly notified by the applicant.

Telephone inquires concerning this decision should be directed to the undersigned at 571-272-7253.

Monica A. Graves
Petitions Examiner
Office of Petitions

cc: **ANDRUS, SCEALES, STARKE & SAWALL, LLP**
100 EAST WISCONSIN AVENUE, SUITE 1100
MILWAUKEE WI 53202

UNITED STATES PATENT AND TRADEMARK OFFICE

UNITED STATES DEPARTMENT OF COMMERCE
United States Patent and Trademark Office
Address: COMMISSIONER FOR PATENTS
P.O. Box 1450
Alexandria, Virginia 22313-1450
www.uspto.gov

WONG, CABELLO, LUTSCH, RUTHERFORD & BRUCCULERI, L.L.P.
20333 SH 249 6th Floor
HOUSTON, TX 77070

Mail Date: 04/22/2010

Applicant	: Jun Liu	: DECISION ON REQUEST FOR
Patent Number	: 7606055	: RECALCULATION of PATENT
Issue Date	: 10/20/2009	: TERM ADJUSTMENT IN VIEW
Appliction No	: 11/419,133	: OF WYETH AND NOTICE OF INTENT TO
Filed	: 05/18/2006	: ISSUE CERTIFICATE OF CORRECTION
		:

The Request for Recalculation is **GRANTED** to the extent indicated.

The patent term adjustment has been determined to be **151** days. The USPTO will *sua sponte* issue a certificate of correction reflecting the amount of PTA days determined by the recalculation.

Prior to the issuance of the certificate of correction, the USPTO will afford patentee an opportunity to be heard and request reconsideration. Accordingly, patentee has **one month or thirty (30) days**, whichever is longer, to file a request for reconsideration of this patent term adjustment calculation. See 35 U.S.C. 154(b)(3)(B)(ii) and 37 CFR 1.322(a)(4). No extensions of time will be granted under 37 CFR 1.136.

Patentee should use document code PET.OP if electronically filing a request for reconsideration of this patent term adjustment calculation. The patentee must also include the information required by 37 CFR 1.705(b)(2) and the fee required by 37 CFR 1.18(e). If patentee does not file a timely request for reconsideration of this patent term adjustment calculation including the information required by 37 CFR 1.705(b)(2) and the fee required by 37 CFR 1.18(e), the USPTO will issue a certificate of correction reflecting the PTA determination noted above.

Patentee should be aware that in order to preserve the right to review in the United States District Court for the District of Columbia of the USPTO patent term adjustment determination, patentee must ensure that he or she also take the steps required under 35 U.S.C. 154(b)(4)(A) in a timely manner. Nothing in the request for recalculation should be construed as providing an alternative time frame for commencing a civil action under 35 U.S.C. 154(b)(4)(A).

Any questions concerning this decision should be directed to the Office of Patent Legal Administration at 571-272-7702.

UNITED STATES PATENT AND TRADEMARK OFFICE

Commissioner for Patents
United States Patent and Trademark Office
P.O. Box 1450
Alexandria, VA 22313-1450
www.uspto.gov

PROSKAUER ROSE LLP
One International Place
Boston MA 02110

MAILED

JUN 21 2010

OFFICE OF PETITIONS

In re Application of
MURATOGLU, Orhun K. et al.
Application No. 11/419,142
Filed: May 18, 2006
Attorney Docket No. **49931-0131**

DECISION ON PETITION
TO WITHDRAW
FROM RECORD

This is a decision on the Request to Withdraw as attorney or agent of record under 37 C.F.R. § 1.36(b), filed May 25, 2010

The request is **NOT APPROVED**.

The Office has revised its change in procedure for request to withdraw from representation applies to requests filed on or after May 12, 2008.

The Office will no longer accept address changes to a new practitioner or law firm filed with a Request, absent the filing of a power of attorney to the new representative. The Office will either change the correspondence address of record to the most current address information provided for the assignee of the entire interest who properly became of record under 37 CFR 3.71 or, if no assignee of the entire interest has properly been made of record under 37 CFR 3.71, the most current address information provided for the first named inventor.

Accordingly, the request to withdraw from record cannot be approved because the request to change the correspondence address is not that of: (1) the first named inventor; or (2) an assignee of the entire interest under 37 C.F.R 3.71 who has properly intervened.

If an assignee has intervened in this application, then a Statement under 37 CFR 3.73(b) or a copy of the actual assignment must be submitted with a renewed request.

All future communications from the Office will continue to be directed to the above-listed address until otherwise notified by applicant.

Telephone inquiries concerning this decision should be directed to Tredelle Jackson at 571-272-2783.

/Tredelle D. Jackson/
Paralegal Specialist
Office of Petitions

cc: **MASSACHUSETTS GENERAL HOSPITAL**
THE GENERAL HOSPITAL CORPORATION
PERKINS COLE LLP
607 FOURTEENTH STREET, NW
WASHINGTON, DC 20005

UNITED STATES PATENT AND TRADEMARK OFFICE

Commissioner for Patents
United States Patent and Trademark Office
P.O. Box 1450
Alexandria, VA 22313-1450
www.uspto.gov

PATREA L. PABST
PABST PATENT GROUP LLP
400 COLONY SQUARE, SUITE 1200
1201 PEACHTREE STREET
ATLANTA, GA 30361

COPY MAILED

MAY 0 2 2007

OFFICE OF PETITIONS

In re Application of	:	
WATANABE, Wiwik et al.	:	
Application No. 11/419,165	:	DECISION ON PETITION
Filed: May 18, 2006	:	TO WITHDRAW
Attorney Docket No. **PUL 103**	:	FROM RECORD

This is a decision on the Request to Withdraw as attorney or agent of record under 37 C.F.R. § 1.36(b), filed October 04, 2006.

The request is **NOT APPROVED** as moot.

A review of the file record indicates that the power of attorney to Pabst Patent Group LLP has been revoked by the assignee of the patent application on January 10, 2007. Accordingly, the request to withdraw under 37 C.F.R. § 1.36(b) is moot.

All future communications from the Office will continue to be directed to the below-listed address until otherwise notified by applicant.

Telephone inquires concerning this decision should be directed to Michelle R. Eason at 571-272-4231.

T. Williams

Terri Williams
Petitions Examiner
Office of Petitions

cc: **EDWARDS ANGELL PALMER & DODGE LLP**
P.O. BOX 55874
BOSTON, MA 02205

UNITED STATES PATENT AND TRADEMARK OFFICE

UNITED STATES DEPARTMENT OF COMMERCE
United States Patent and Trademark Office
Address: COMMISSIONER FOR PATENTS
P.O. Box 1450
Alexandria, Virginia 22313-1450
www.uspto.gov

Oppedahl Patent Law Firm LLC (P&A)
P O Box 5940
Dillon, CO 80435-5940

Mail Date: 04/20/2010

Applicant	: William J. Kitchen	: DECISION ON REQUEST FOR
Patent Number	: 7594473	: RECALCULATION of PATENT
Issue Date	: 09/29/2009	: TERM ADJUSTMENT IN VIEW
Appliction No	: 11/419,170	: OF WYETH AND NOTICE OF INTENT TO
Filed	: 05/18/2006	: ISSUE CERTIFICATE OF CORRECTION
		:

The Request for Recalculation is **GRANTED** to the extent indicated.

The patent term adjustment has been determined to be **271** days. The USPTO will *sua sponte* issue a certificate of correction reflecting the amount of PTA days determined by the recalculation.

Prior to the issuance of the certificate of correction, the USPTO will afford patentee an opportunity to be heard and request reconsideration. Accordingly, patentee has **one month or thirty (30) days**, whichever is longer, to file a request for reconsideration of this patent term adjustment calculation. See 35 U.S.C. 154(b)(3)(B)(ii) and 37 CFR 1.322(a)(4). No extensions of time will be granted under 37 CFR 1.136.

Patentee should use document code PET.OP if electronically filing a request for reconsideration of this patent term adjustment calculation. The patentee must also include the information required by 37 CFR 1.705(b)(2) and the fee required by 37 CFR 1.18(e). If patentee does not file a timely request for reconsideration of this patent term adjustment calculation including the information required by 37 CFR 1.705(b)(2) and the fee required by 37 CFR 1.18(e), the USPTO will issue a certificate of correction reflecting the PTA determination noted above.

Patentee should be aware that in order to preserve the right to review in the United States District Court for the District of Columbia of the USPTO patent term adjustment determination, patentee must ensure that he or she also take the steps required under 35 U.S.C. 154(b)(4)(A) in a timely manner. Nothing in the request for recalculation should be construed as providing an alternative time frame for commencing a civil action under 35 U.S.C. 154(b)(4)(A).

Any questions concerning this decision should be directed to the Office of Patent Legal Administration at 571-272-7702.

UNITED STATES PATENT AND TRADEMARK OFFICE

UNITED STATES DEPARTMENT OF COMMERCE
United States Patent and Trademark Office
Address: COMMISSIONER FOR PATENTS
P.O. Box 1450
Alexandria, Virginia 22313-1450
www.uspto.gov

Oppedahl Patent Law Firm LLC (P&A)
P O Box 5940
Dillon, CO 80435-5940

Mail Date: 05/17/2010

Applicant : William J. Kitchen
Patent Number : 7594473
Issue Date : 09/29/2009
Application No : 11/419,170
Filed : 05/18/2006

: NOTICE CONCERNING IMPROPER
: CALCULATION OF PATENT TERM
: ADJUSTMENT BASED UPON USPTO
: IMPROPERLY MEASURING REDUCTION
: PERIOD UNDER 37 CFR 1.704(c)(10).

The United States Patent and Trademark Office (USPTO) discovered that in processing the recent recalculation decisions mailed in response to patentee's filed Request for Recalculation of Patent Term Adjustment in view of Wyeth, the USPTO improperly measured the reduction period for reductions under 37 CFR 1.704(c)(10). Pursuant to 37 CFR 1.704(c)(10), patentee's reduction begins on the date of filing the amendment under 37 CFR 1.312 ("1.312 amendment") or other related paper and ends on the date that the Office mails a response to the filing of the 1.312 amendment or other paper. It has been discovered that during the recalculation, the calculation failed to the limit the reduction to the mail date of the response to the 1.312 amendment or other paper. Accordingly, patentee's reductions were greater than warranted.

This notice **VACATES** the previous GRANTED request for recalculation and provides patentee with a revised GRANTED recalculation.

The patent term adjustment has been determined to be **313** days. The USPTO will *sua sponte* issue a certificate of correction reflecting the amount of patent term adjustment (PTA) days determined by the recalculation.

Prior to the issuance of the certificate of correction, the USPTO will afford patentee an opportunity to be heard and request reconsideration. Accordingly, patentee has **one month or thirty (30) days** from the mail date of this notice, whichever is longer, to file a request for reconsideration of this PTA calculation. See 35 U.S.C. § 154(b)(3)(B)(ii) and 37 CFR 1.322(a)(4).

Patentee should use document code PET.OP if electronically filing a request for reconsideration of this PTA calculation. The patentee must also include the information required by 37 CFR 1.705(b)(2), and the fee required by 37 CFR 1.18(e). If patentee does not file a timely request for reconsideration of this PTA calculation, including the information required by 37 CFR 1.705(b)(2) and the fee required by 37 CFR 1.18(e), the USPTO will issue a certificate of correction reflecting the PTA determination noted above.

Patentee should be aware that in order to preserve the right of review of the USPTO's PTA determination in the United States District Court for the District of Columbia, patentee must ensure that the steps required under 35 U.S.C. § 154 (b)(4) are taken in a timely manner. Nothing in the request for recalculation should be construed as providing an alternative time frame for commencing a civil action under 35 U.S.C. § 154(b)(4).

UNITED STATES PATENT AND TRADEMARK OFFICE

Commissioner for Patents
United States Patent and Trademark Office
P.O. Box 1450
Alexandria, VA 22313-1450
www.uspto.gov

TEXAS INSTRUMENTS INCORPORATED
P O BOX 655474, M/S 3999
DALLAS TX 75265

COPY MAILED
JAN 13 2010

In re Application of	:	
Mukesh Taneja	:	
Application No. 11/419,213	:	DECISION ON PETITION
Filed: May 19, 2006	:	
Attorney Docket No. TI-60746	:	

This is a decision on the petition under the unintentional provisions of 37 CFR 1.137(b), filed November 20, 2009, to revive the above-identified application.

The petition is **GRANTED**.

This application became abandoned for failure to reply in a proper and timely manner to the final Office action mailed May 15, 2009. A three-month extension of time under the provisions of 37 CFR 1.136(a) was timely obtained. Accordingly, this application became abandoned on November 16, 2009.

The petition satisfies the requirements of 37 CFR 1.137(b) in that petitioner has supplied (1) the reply in the form of a Request for Continued Examination (RCE) and fee of $810.00 and the submission required by 37 CFR 1.114 (previously submitted on October 20, 2009); (2) the petition fee of $1,620.00; and (3) a proper statement of unintentional delay.

Telephone inquiries concerning this decision should be directed to the undersigned at (571) 272-7751.

This matter is being referred to Technology Center 2617 for processing of the Request for Continued Examination under 37 CFR 1.114 and the Amendment filed on October 20, 2009.

Joan Olszewski
Petitions Examiner
Office of Petitions

UNITED STATES PATENT AND TRADEMARK OFFICE

Commissioner for Patents
United States Patent and Trademark Office
P.O. Box 1450
Alexandria, VA 22313-1450
www.uspto.gov

LEXMARK INTERNATIONAL, INC.
INTELLECTUAL PROPERTY LAW DEPARTMENT
740 WEST NEW CIRCLE ROAD
BLDG. 082-1
LEXINGTON KY 40550-0999

COPY MAILED

SEP 2 5 2009

OFFICE OF PETITIONS

In re Application of	:	
Blaine et al.	:	
Application No. 11/419,228	:	ON PETITION
Filed: May 19, 2006	:	
Attorney Docket No. 2005-0589.01	:	

This is a decision on the petition under 37 C.F.R. § 1.137(a), filed July 14, 2009, to revive the above-identified application. In view of the allegation in the petition of the non-receipt of the Office action, the petition will be considered under 37 CFR 1.181 requesting the withdrawal of the holding of abandonment in the above-identified application.

The petition under 37 C.F.R. § 1.181 is **DISMISSED**.

The above-identified application was held abandoned for failure to timely reply to the non-final Office action mailed December 3, 2008, which set a shortened statutory period for reply of three (3) months. A reply was due on or before March 3, 2009. A Notice of Abandonment was mailed on June 24, 2009.

Petitioner asserts that the Office action dated December 3, 2008 was not received.

A review of the written record indicates no irregularity in the mailing of the Office action, and, in the absence of any irregularity, there is a strong presumption that the Office action was properly mailed to the practitioner at the address of record. This presumption may be overcome by a showing that the Office action was not in fact received. In this regard, the showing required to establish the failure to receive the Office action must consist of the following:

1. a statement from practitioner stating that the Office action was not received by the practitioner;

2. a statement from the practitioner attesting to the fact that a search of the file jacket and docket records indicates that the Office action was not received; and

3. a copy of the docket record where the non-received Office action would have been entered had it been received must be attached to and referenced in the practitioner's statement.

See MPEP § 711.03(c) under subheading "Petition to Withdraw Holding of Abandonment Based on Failure to Receive Office Action," and "Withdrawing the Holding of Abandonment When Office Actions Are Not Received," 1156 Official Gazette 53 (November 16, 1993).

Petitioner has failed to comply with item (2) listed above. Petitioner has submitted statements from the Administrative Assistants of the Legal Department at the firm. However, the statement as described above must be from the practitioner himself.

Further, although petitioner did submit a copy of the docket, the copy of the practitioner's record(s) required to show non-receipt of the Office action should also include the master docket for the firm. That is, if a three month period for reply was set in the non-received Office action, a copy of the master docket report showing all replies docketed for a date three months from the mail date of the non-received Office action must be submitted as documentary proof of non-receipt of the Office action. If no such master docket exists, the practitioner should so state and provide other evidence such as, but not limited to, the following: the application file jacket; incoming mail log; calendar; reminder system; or the individual docket record for the application in question. See MPEP 711.03(c).

If petitioner cannot provide the evidence requested above, or simply does not wish to, petitioner should notify the Office to consider the petition to revive under 37 CFR 1.137(a).

Further correspondence with respect to this matter should be addressed as follows:

By mail: Mail Stop PETITIONS
Commissioner for Patents
Post Office Box 1450
Alexandria, VA 22313-1450

By hand: Customer Window located at:

U.S. Patent and Trademark Office
Customer Service Window Randolph Building
401 Dulany Street
Alexandria, VA 22314

By fax: (571) 273-8300
ATTN: Office of Petitions

Telephone inquiries concerning this decision should be directed to the undersigned at (571) 272-3206.

Liana Walsh
Petitions Examiner
Office of Petitions

UNITED STATES PATENT AND TRADEMARK OFFICE

UNITED STATES DEPARTMENT OF COMMERCE
United States Patent and Trademark Office
Address: COMMISSIONER FOR PATENTS
P.O. Box 1450
Alexandria, Virginia 22313-1450
www.uspto.gov

SCHLUMBERGER OILFIELD SERVICES
200 GILLINGHAM LANE
MD 200-9
SUGAR LAND, TX 77478

Mail Date: 04/21/2010

Applicant	: Robert Freedman	: DECISION ON REQUEST FOR
Patent Number	: 7624794	: RECALCULATION of PATENT
Issue Date	: 12/01/2009	: TERM ADJUSTMENT IN VIEW
Appliction No	: 11/419,233	: OF WYETH AND NOTICE OF INTENT TO
Filed	: 05/19/2006	: ISSUE CERTIFICATE OF CORRECTION
		:

The Request for Recalculation is **GRANTED** to the extent indicated.

The patent term adjustment has been determined to be **256** days. The USPTO will *sua sponte* issue a certificate of correction reflecting the amount of PTA days determined by the recalculation.

Prior to the issuance of the certificate of correction, the USPTO will afford patentee an opportunity to be heard and request reconsideration. Accordingly, patentee has **one month or thirty (30) days**, whichever is longer, to file a request for reconsideration of this patent term adjustment calculation. See 35 U.S.C. 154(b)(3)(B)(ii) and 37 CFR 1.322(a)(4). No extensions of time will be granted under 37 CFR 1.136.

Patentee should use document code PET.OP if electronically filing a request for reconsideration of this patent term adjustment calculation. The patentee must also include the information required by 37 CFR 1.705(b)(2) and the fee required by 37 CFR 1.18(e). If patentee does not file a timely request for reconsideration of this patent term adjustment calculation including the information required by 37 CFR 1.705(b)(2) and the fee required by 37 CFR 1.18(e), the USPTO will issue a certificate of correction reflecting the PTA determination noted above.

Patentee should be aware that in order to preserve the right to review in the United States District Court for the District of Columbia of the USPTO patent term adjustment determination, patentee must ensure that he or she also take the steps required under 35 U.S.C. 154(b)(4)(A) in a timely manner. Nothing in the request for recalculation should be construed as providing an alternative time frame for commencing a civil action under 35 U.S.C. 154(b)(4)(A).

Any questions concerning this decision should be directed to the Office of Patent Legal Administration at 571-272-7702.

UNITED STATES PATENT AND TRADEMARK OFFICE

UNITED STATES DEPARTMENT OF COMMERCE
United States Patent and Trademark Office
Address: COMMISSIONER FOR PATENTS
P.O. Box 1450
Alexandria, Virginia 22313-1450
www.uspto.gov

CAPITOL PATENT & TRADEMARK LAW FIRM, PLLC
P.O. BOX 1995
VIENNA, VA 22183

Mail Date: 04/21/2010

Applicant	: Hakki Candan Cankaya	: DECISION ON REQUEST FOR
Patent Number	: 7573875	: RECALCULATION of PATENT
Issue Date	: 08/11/2009	: TERM ADJUSTMENT IN VIEW
Appliction No	: 11/419,236	: OF WYETH AND NOTICE OF INTENT TO
Filed	: 05/19/2006	: ISSUE CERTIFICATE OF CORRECTION
		:

The Request for Recalculation is **GRANTED** to the extent indicated.

The patent term adjustment has been determined to be **516** days. The USPTO will *sua sponte* issue a certificate of correction reflecting the amount of PTA days determined by the recalculation.

Prior to the issuance of the certificate of correction, the USPTO will afford patentee an opportunity to be heard and request reconsideration. Accordingly, patentee has **one month or thirty (30) days**, whichever is longer, to file a request for reconsideration of this patent term adjustment calculation. See 35 U.S.C. 154(b)(3)(B)(ii) and 37 CFR 1.322(a)(4). No extensions of time will be granted under 37 CFR 1.136.

Patentee should use document code PET.OP if electronically filing a request for reconsideration of this patent term adjustment calculation. The patentee must also include the information required by 37 CFR 1.705(b)(2) and the fee required by 37 CFR 1.18(e). If patentee does not file a timely request for reconsideration of this patent term adjustment calculation including the information required by 37 CFR 1.705(b)(2) and the fee required by 37 CFR 1.18(e), the USPTO will issue a certificate of correction reflecting the PTA determination noted above.

Patentee should be aware that in order to preserve the right to review in the United States District Court for the District of Columbia of the USPTO patent term adjustment determination, patentee must ensure that he or she also take the steps required under 35 U.S.C. 154(b)(4)(A) in a timely manner. Nothing in the request for recalculation should be construed as providing an alternative time frame for commencing a civil action under 35 U.S.C. 154(b)(4)(A).

Any questions concerning this decision should be directed to the Office of Patent Legal Administration at 571-272-7702.

UNITED STATES PATENT AND TRADEMARK OFFICE

Commissioner for Patents
United States Patent and Trademark Office
P.O. Box 1450
Alexandria, VA 22313-1450
www.uspto.gov

ROBERT J. SAYFIE, P.C.
161 OTTAWA AVENUE NW, SUITE 407
GRAND RAPIDS MI 49503

COPY MAILED

SEP 2 3 2008

OFFICE OF PETITIONS

In re Application of	:	
Enos et al.	:	
Application No. 11/419,250	:	DECISION ON PETITION
Filed: May 19, 2006	:	
Attorney Docket No. PA8-ENOS	:	

This is a decision on the petition under the unavoidable provisions of 37 CFR 1.137(a), filed June 30, 2008, to revive the above-identified application.

The petition is **DISMISSED.**

Any further petition to revive must be submitted within TWO (2) MONTHS from the mail date of this decision. Extensions of time under 37 CFR 1.136(a) are permitted. The reconsideration request should include a cover letter entitled "Renewed Petition under 37 CFR 1.137(a)." This is **not** a final agency action within the meaning of 5 U.S.C.§ 704.

This above-identified application became abandoned for failure to timely file a proper response to a final Office Action, which was mailed on September 4, 2007. The final Office Action set a three (3) month shortened statutory period for reply. An amendment, request for three month extension of time, $920.00 check and Request for Continued Examination were submitted on March 4, 2008. In response to the amendment an Advisory Action was mailed on March 31, 2008 indicating the amendment submitted on March 4, 2008 did not place the application in condition for allowance. Accordingly, this application became abandoned on March 5, 2008. A Notice of Abandonment as mailed on April 3, 2008.

Petitioner contends that a proper reply in the form of a Request for Continued Examination (RCE), an amendment pursuant to 37 CFR 1.114 and a check in the amount of $920.00. Petitioner states that he was informed that the RCE was not in the file.

A grantable petition under 37 CFR 1.137(a) must be accompanied by: (1) the required reply, unless previously filed; (2) the petition fee as set forth in 37 CFR 1.17(l); (3) a showing to the satisfaction of the Director that the entire delay in filing the required reply from the due date for the reply until the filing of a grantable petition pursuant to 37 CFR 1.137(a) was unavoidable; and (4) any terminal disclaimer (and fee as set forth in 37 CFR 1.20(d)) required pursuant to 37 CFR 1.137(d). The instant petition lacks item (1) and (3).

The instant petition lacks item (1) the required reply. The proposed reply required for consideration of a petition to revive after a final Office Action must be a Notice of Appeal (and appeal fee required by 37 CFR 1.17(b)), an amendment that prima facie places the application in condition for allowance, the filing of a continuing application or a Request for Continued Examination (RCE). See MPEP 711.03(c)(III)(A)(2) and 37 CFR 1.114.

As to item (3), the showing of record is not sufficient to establish to the satisfaction of the Director that the delay was unavoidable within the meaning of 37 C.F.R. § 1.137(a). The Office may revive an abandoned application if the delay in responding to the relevant outstanding office requirement is shown to the satisfaction of the Director to have been "unavoidable." See, 37 C.F.R. § 1.137(a)(3). Decisions on reviving abandoned applications have adopted the reasonably prudent person standard in determining if the delay was unavoidable. Ex parte Pratt, 1887 Dec. Comm'r Pat. 31, 32-33 (Comm'r Pat. 1887) (the term "unavoidable" is applicable to ordinary human affairs, and requires no more greater care or diligence than is generally used and observed by prudent and careful men in relation to their most important business."); In re Mattullath, 38 App. D.C. 497, 514-15 (D.C. Cir. 1912); Ex parte Henrich, 1913 Dec. Comm'r Pat. 139, 141 (Comm'r Pat. 1913). In addition, decisions on revival are made on a "case by case basis, taking all the facts and circumstances into account." Smith v. Mossinghoff, 671 F.2d 533, 538, 213 USPQ 977, 982 (D.C. Cir. 1982). A petition to revive an application as unavoidably abandoned cannot be granted where petitioner has failed to meet his or her burden of establishing the cause of the unavoidable delay. Haines v. Quigg, 673 F. Supp. 314, 5 USPQ2D 1130 (N.D. Ind. 1987).

Petitioner's argument has been considered, but it is not persuasive. A review of the record shows that although petitioner did timely submit an RCE and amendment as the submission requirement, as well as a three month request for extension of time, the reply failed to include the proper fees. The three month extension of time fee was $525.00 and the RCE fee was $405. Petitioner submitted a check in the amount of $920. However, the total fees required were $930. Further review of the record shows that a general authorization to charge any deficiencies has not been provided. Accordingly, a proper RCE and fee were not timely submitted. The failure to calculate and/or submit the appropriate fees is not unavoidable. The application is properly held abandoned.

If petitioner cannot provide the evidence necessary to establish unavoidable delay, or simply does not wish to, petitioner may wish to consider filing a petition stating that the delay was unintentional. Public Law 97-247, § 3, 96 Stat. 317 (1982), which revised patent and trademark fees, amended 35 U.S.C. § 41(a)(7) to provide for the revival of an "unintentionally" abandoned application without a showing that the delay in prosecution or in late payment of the issue fee was "unavoidable." This amendment to 35 U.S.C. § 41(a)(7) has been implemented in 37 CFR 1.137(b). An "unintentional" petition under 37 CFR 1.137(b) must be accompanied by the $770.00 petition fee.[1]

[1] Effective October 2, 2008 the petition fee will increase to $810.00

The filing of a petition under 37 CFR 1.137(b) cannot be intentionally delayed and therefore must be filed promptly. A person seeking revival due to unintentional delay cannot make a statement that the delay was unintentional unless the entire delay, including the date it was discovered that the application was abandoned until the filing of the petition to revive under 37 CFR 1.137(b), was unintentional. A statement that the delay was unintentional is not appropriate if petitioner intentionally delayed the filing of a petition for revival under 37 CFR 1.137(b).

Further correspondence with respect to this matter should be addressed as follows:

By Mail: Mail Stop PETITION
Commissioner for Patents
P. O. Box 1450
Alexandria, VA 22313-1450

By hand: U. S. Patent and Trademark Office
Customer Service Window, Mail Stop Petitions
Randolph Building
401 Dulany Street
Alexandria, VA 22314

By facsimile: **(571) 273-8300**
Attn: Office of Petitions

Telephone inquiries concerning this decision should be directed to the undersigned at (571) 272-3215

Charlema Grant
Petitions Attorney
Office of Petitions

UNITED STATES PATENT AND TRADEMARK OFFICE

Commissioner for Patents
United States Patent and Trademark Office
P.O. Box 1450
Alexandria, VA 22313-1450
www.uspto.gov

ROBERT J. SAYFIE, P.C.
161 OTTAWA AVENUE NW, SUITE 407
GRAND RAPIDS MI 49503

MAILED

MAR 06 2009

OFFICE OF PETITIONS

In re Application of :
Enos et al. :
Application No. 11/419,250 :
Filed: May 19, 2006 :
Attorney Docket No. PA8-ENOS :

ON PETITION

This is a decision on the renewed petition under the unintentional provisions of 37 CFR 1.137(b), filed December 29, 2008, to revive the above-identified application.

The petition is **DISMISSED**.

Any request for reconsideration of this decision must be submitted within TWO (2) MONTHS from the mail date of this decision. Extensions of time under 37 CFR 1.136(a) are permitted. The reconsideration request should include a cover letter entitled "Renewed Petition under 37 CFR 1.137(b)." This is **not** a final agency action within the meaning of 5 U.S.C. § 704.

The application became abandoned for failure to timely file a reply within the meaning of 37 CFR 1.113 to the final Office action of September 26, 2007. The proposed reply required for consideration of a petition to revive must be a Notice of Appeal (and appeal fee required by 37 CFR 41.20(b)(2)), an amendment that *prima facie* places the application in condition for allowance, a Request for Continued Examination (RCE) and submission (37 CFR 1.114), or the filing of a continuing application under 37 CFR 1.53(b). *See* MPEP 711.03(c)(III)(A)(2). Since the amendment submitted does not *prima facie* place the application in condition for allowance, the reply required must be a Notice of Appeal (and appeal fee), RCE, or the filing of a continuing application under 37 CFR 1.53(b).

A grantable petition under 37 CFR 1.137(b) must be accompanied by: (1) the required reply, unless previously filed; (2) the petition fee as set forth in 37 CFR 1.17(m); (3) a statement that the entire delay in filing the required reply from the due date for the reply until the filing of a grantable petition pursuant to 37 CFR 1.137(b) was unintentional; and (4) any terminal disclaimer (and fee as set forth in 37 CFR 1.20(d)) required by 37 CFR 1.137(d). Where there is a question as to whether either the abandonment or the delay in filing a petition under 37 CFR 1.137 was unintentional, the Director may require additional information. See MPEP 711.03(c)(II)(C) and (D). The instant petition lacks item(s) 1.

As to item (1), the Office is still not in receipt of the $10.00 shortfall for the $405.00 RCE fee.

Further correspondence with respect to this matter should be addressed as follows:

By Mail: Mail Stop PETITION
Commissioner for Patents
P. O. Box 1450
Alexandria, VA 22313-1450

By hand: U. S. Patent and Trademark Office
Customer Service Window, Mail Stop Petitions
Randolph Building
401 Dulany Street
Alexandria, VA 22314

The centralized facsimile number is **(571) 273-8300.**

Telephone inquiries concerning this decision should be directed to the undersigned at (571) 272-3215.

Charlema Grant
Petitions Attorney
Office of Petitions

UNITED STATES PATENT AND TRADEMARK OFFICE

Commissioner for Patents
United States Patent and Trademark Office
P.O. Box 1450
Alexandria, VA 22313-1450
www.uspto.gov

ROBERT J. SAYFIE, P.C.
161 OTTAWA AVENUE NW, SUITE 407
GRAND RAPIDS MI 49503

MAILED

JUN 12 2009

OFFICE OF PETITIONS

In re Application of :
Enos et al. :
Application No. 11/419,250 :
Filed: May 19, 2006 :
Attorney Docket No. PA8-ENOS :

ON PETITION

This is a decision on the renewed petition under the unintentional provisions of 37 CFR 1.137(b), filed March 24, 2009, to revive the above-identified application.

The petition is **GRANTED**.

The application became abandoned for failure to timely file a reply within the meaning of 37 CFR 1.113 to the final Office action of September 26, 2007. The proposed reply required for consideration of a petition to revive must be a Notice of Appeal (and appeal fee required by 37 CFR 41.20(b)(2)), an amendment that *prima facie* places the application in condition for allowance, a Request for Continued Examination (RCE) and submission (37 CFR 1.114), or the filing of a continuing application under 37 CFR 1.53(b). *See* MPEP 711.03(c)(III)(A)(2). Since the amendment submitted does not *prima facie* place the application in condition for allowance, the reply required must be a Notice of Appeal (and appeal fee), RCE, or the filing of a continuing application under 37 CFR 1.53(b).

The petition satisfies the requirements of 37 CFR 1.137(b) in that petitioner has supplied (1) the reply in the form of a Request for Continued Examination (RCE) and fee of $405, and the submission required by 37 CFR 1.114; (2) the petition fee of $810; and (3) a proper statement of unintentional delay.

Telephone inquiries concerning this decision should be directed to the undersigned at (571) 272-3215.

This application is being referred to Technology Center AU 3643 for processing of the RCE and for appropriate action by the Examiner in the normal course of business on the amendment submitted in accordance with 37 CFR 1.114.

Charlema Grant
Petitions Attorney
Office of Petitions

UNITED STATES PATENT AND TRADEMARK OFFICE

Commissioner for Patents
United States Patent and Trademark Office
P.O. Box 1450
Alexandria, VA 22313-1450
www.uspto.gov

Basch & Nickerson LLP
1777 Penfield Road
Penfield, NY 14526

MAILED

APR 10 2009

OFFICE OF PETITIONS

In re Application of	:	
Robert W. Gray, et al.	:	
Application No. 11/419,265	:	DECISION ON PETITION
Filed: May 19, 2006	:	TO WITHDRAW
Attorney Docket No. 1008 023 301 0201	:	FROM RECORD
	:	

This is a decision on the Request to Withdraw as attorney or agent of record under 37 C.F.R. § 1.36(b), filed February 10, 2009.

The request is **APPROVED**.

A grantable request to withdraw as attorney/agent of record must be signed by every attorney/agent seeking to withdraw or contain a clear indication that one attorney is signing on behalf of another/others. A request to withdraw will not be approved unless at least 30 (thirty) days would remain between the date of approval and the later of the expiration date of a time to file a response or the expiration date of the maximum time period which can be extended under 37 C.F.R. § 1.136(a).

The request was signed by Michael J. Nickerson on behalf of all attorneys of record. All attorneys/agents have been withdrawn. Applicant is reminded that there is no attorney of record at this time.

The request to change the correspondence of record is not acceptable as the requested correspondence address is not that of: (1) the first named signing inventor; or (2) an intervening assignee of the entire interest under 37 C.F.R 3.71. All future communications from the Office will be directed to the first named signing inventor at the first copied address below until otherwise properly notified by the applicant.

Telephone inquiries concerning this decision should be directed to Terri Williams at 571-272-2991.

Terri Williams
Petitions Examiner
Office of Petitions

cc: **Robert W. Gray**
92 Cypress Street
Rochester, NY 14620

cc: **Biophan Technologies, Inc.**
15 Schoen Place
Pittsford, NY 14534

UNITED STATES PATENT AND TRADEMARK OFFICE

UNITED STATES DEPARTMENT OF COMMERCE
United States Patent and Trademark Office
Address: COMMISSIONER FOR PATENTS
P.O. Box 1450
Alexandria, Virginia 22313-1450
www.uspto.gov

APPLICATION NUMBER	FILING OR 371(C) DATE	FIRST NAMED APPLICANT	ATTY. DOCKET NO./TITLE
11/419,265	05/19/2006	Robert W. Gray	1008 023 301 0201

CONFIRMATION NO. 9042

POWER OF ATTORNEY NOTICE

37211
BASCH & NICKERSON LLP
1777 PENFIELD ROAD
PENFIELD, NY 14526

OC000000035427988

Date Mailed: 04/09/2009

NOTICE REGARDING CHANGE OF POWER OF ATTORNEY

This is in response to the Power of Attorney filed 02/10/2009.

- The withdrawal as attorney in this application has been accepted. Future correspondence will be mailed to the new address of record. 37 CFR 1.33.

/tswilliams/

Office of Data Management, Application Assistance Unit (571) 272-4000, or (571) 272-4200, or 1-888-786-0101

UNITED STATES PATENT AND TRADEMARK OFFICE

Commissioner for Patents
United States Patent and Trademark Office
P.O. Box 1450
Alexandria, VA 22313-1450
www.uspto.gov

BASCH & NICKERSON LLP
1777 PENFIELD ROAD
PENFIELD, NY 14526

MAILED

MAR 13 2009

OFFICE OF PETITIONS

In re Application of	:	
Robert W. Gray, et al.	:	
Application No. 11/419,266	:	DECISION ON PETITION
Filed: May 19, 2006	:	TO WITHDRAW
Attorney Docket No. 1008 023 315 0201	:	FROM RECORD
	:	

This is a decision on the Request to Withdraw as attorney or agent under 37 C.F.R. § 1.36(b) filed February 10, 2009.

The request is **NOT APPROVED**.

A review of the file record indicates that Basch & Nickerson, LLP does not have power of attorney in this patent application. See 37 C.F.R. § 10.40. Accordingly, the request to withdraw under 37 C.F.R. § 1.36(b) is not applicable.

All future communications from the Office will continue to be directed to the below-listed address until otherwise properly notified by the applicant.

Telephone inquires concerning this decision should be directed to undersigned at 571-272-1642. All other inquiries concerning the examination or status of this application should be directed to the Technology Center.

/AMW/
April M. Wise
Petitions Examiner
Office of Petitions

cc: BIOPHAN TECHNOLOBIES, INC.
15 SCHOEN PLACE
PITTSFORD, NY 14534

UNITED STATES PATENT AND TRADEMARK OFFICE

Commissioner for Patents
United States Patent and Trademark Office
P.O. Box 1450
Alexandria, VA 22313-1450
www.uspto.gov

BASCH & NICKERSON LLP
1777 PENFIELD ROAD
PENFIELD, NY 14526

COPY MAILED

MAR 23 2009

OFFICE OF PETITIONS

In re Application of	:	
Robert W. GRAY, et al	:	
Application No. 11/419,268	:	DECISION ON PETITION
Filed: May 19, 2006	:	TO WITHDRAW
Attorney Docket No. 1008 023 304 0201	:	FROM RECORD
	:	

This is a decision on the Request to Withdraw as attorney or agent under 37 C.F.R. § 1.36(b) filed February 10, 2009.

The request is **NOT APPROVED**.

A review of the file record indicates that Michael J. Nickerson and Duane C. Basch do not have power of attorney in this patent application. See 37 C.F.R. § 10.40. Accordingly, the request to withdraw under 37 C.F.R. § 1.36(b) is not applicable.

All future communications from the Office will continue to be directed to the address indicated below until otherwise properly notified by the applicant.

Telephone inquires concerning this decision should be directed to the undersigned at 571-272-6735.

Diane Goodwyn
Petitions Examiner
Office of Petitions

cc: BIOPHAN TECHNOLOGIES, INC.
15 SCHOEN PLACE
PITTSFORD, NY 14534

UNITED STATES PATENT AND TRADEMARK OFFICE

Commissioner for Patents
United States Patent and Trademark Office
P.O. Box 1450
Alexandria, VA 22313-1450
www.uspto.gov

BASCH & NICKERSON LLP
1777 PENFIELD ROAD
PENFIELD, NY 14526

COPY MAILED

MAR 2 3 2009

OFFICE OF PETITIONS

In re Application of	:	
Robert W. GRAY, et al	:	
Application No. 11/419,269	:	DECISION ON PETITION
Filed: May 19, 2006	:	TO WITHDRAW
Attorney Docket No. 1008 023 302 0201	:	FROM RECORD
	:	

This is a decision on the Request to Withdraw as attorney or agent under 37 C.F.R. § 1.36(b) filed February 10, 2009.

The request is **NOT APPROVED**.

A review of the file record indicates that Michael J. Nickerson and Duane C. Basch do not have power of attorney in this patent application. See 37 C.F.R. § 10.40. Accordingly, the request to withdraw under 37 C.F.R. § 1.36(b) is not applicable.

All future communications from the Office will continue to be directed to the address indicated below until otherwise properly notified by the applicant.

Telephone inquires concerning this decision should be directed to the undersigned at 571-272-6735.

Diane Goodwyn
Petitions Examiner
Office of Petitions

cc: BIOPHAN TECHNOLOGIES, INC.
15 SCHOEN PLACE
PITTSFORD, NY 14534

UNITED STATES PATENT AND TRADEMARK OFFICE

Commissioner for Patents
United States Patent and Trademark Office
P.O. Box 1450
Alexandria, VA 22313-1450
www.uspto.gov

BASCH & NICKERSON LLP
1777 PENFIELD ROAD
PENFIELD NY 14526

COPY MAILED

MAR 1 6 2009

OFFICE OF PETITIONS

In re Application of
GRAY, Robert W. et al.
Application No. 11/419,274
Filed: May 19, 2006
Attorney Docket No. **1008 023 313 0201**

DECISION ON PETITION
TO WITHDRAW
FROM RECORD

This is a decision on the Request to Withdraw as attorney or agent of record under 37 C.F.R. § 1.36(b), filed February 10, 2009.

The request is **APPROVED**.

A grantable request to withdraw as attorney/agent of record must be signed by every attorney/agent seeking to withdraw or contain a clear indication that one attorney is signing on behalf of another/others. The Office requires the practitioner(s) requesting withdrawal to certify that he, she, or they have: (1) given reasonable notice to the client, prior to the expiration of the response period, that the practitioner(s) intends to withdraw from employment; (2) delivered to the client or a duly authorized representative of the client all papers and property (including funds) to which the client is entitled; and (3) notified the client of any responses that may be due and the time frame within which the client must respond, pursuant 37 CFR 10.40(c).

The request was signed by Michael Nickerson on behalf of all attorneys of record who are associated with customer No. 33265. All attorneys/agents associated with the Customer Number 33265 have been withdrawn. Applicant is reminded that there is no attorney of record at this time.

The request to change the correspondence address of record is not acceptable as the requested correspondence address is not that of: (1) the first named signing inventor; or (2) an intervening assignee of the entire interest under 37 C.F.R 3.71. All future communications from the Office will be directed to the first named signing inventor at the first copied address below until otherwise properly notified by the applicant.

In order to request or take action in a patent matter, the assignee must establish its ownership of the patent to the satisfaction of the Director. In this regard, a Statement under 37 CFR 3.73(b) must have either: (i) documentary evidence of a chain of title from the original owner to the assignee

(e.g., copy of an executed assignment), and a statement affirming that the documentary evidence of the chain of title from the original owner to the assignee was or concurrently is being submitted for recordation pursuant to § 3.11; or (ii) a statement specifying where documentary evidence of a chain of title from the original owner to the assignee is recorded in the assignment records of the Office (e.g., reel and frame number).

Telephone inquiries concerning this decision should be directed to Tredelle Jackson at 571-272-2783.

Tredelle D. Jackson
Paralegal Specialist
Office of Petitions

cc: **ROBERT W. GRAY**
92 CYPRESS STREET
ROCHESTER NY 14620

cc: **BIOPHAN TECHNOLOGIES, INC.**
15 SCHOEN PLACE
PITTSFORD NY 14534

UNITED STATES PATENT AND TRADEMARK OFFICE

Commissioner for Patents
United States Patent and Trademark Office
P.O. Box 1450
Alexandria, VA 22313-1450
www.uspto.gov

BASCH & NICKERSON LLP
1777 PENFIELD ROAD
PENFIELD, NY 14526

COPY MAILED

MAR 0 9 2009

OFFICE OF PETITIONS

In re Application of	:	
Robert W. GRAY, et al	:	
Application No. 11/419,281	:	DECISION ON PETITION
Filed: May 19, 2006	:	TO WITHDRAW
Attorney Docket No. 1008 023 307 0201	:	FROM RECORD
	:	

This is a decision on the Request to Withdraw as attorney or agent under 37 C.F.R. § 1.36(b) filed February 10, 2009.

The request is **NOT APPROVED**.

A review of the file record indicates that Michael J. Nickerson and Duane C. Basch do not have power of attorney in this patent application. See 37 C.F.R. § 10.40. Accordingly, the request to withdraw under 37 C.F.R. § 1.36(b) is not applicable.

In order to request or take action in a patent matter, the assignee must establish its ownership of the patent to the satisfaction of the Director. In this regard, a Statement under 37 CFR 3.73(b) must have either: (i) documentary evidence of a chain of title from the original owner to the assignee (*e.g.*, copy of an executed assignment), and a statement affirming that the documentary evidence of the chain of title from the original owner to the assignee was or concurrently is being submitted for recordation pursuant to § 3.11; or (ii) a statement specifying where documentary evidence of a chain of title from the original owner to the assignee is recorded in the assignment records of the Office (*e.g.*, reel and frame number).

All future communications from the Office will continue to be directed to the above-identified address until otherwise properly notified by the applicant.

Telephone inquires concerning this decision should be directed to the undersigned at 571-272-6735.

Diane Goodwyn
Petitions Examiner
Office of Petitions

cc: BIOPHAN TECHNOLOGIES, INC.
15 SCHOEN PLACE
PITTSFORD, NY 14534

UNITED STATES PATENT AND TRADEMARK OFFICE

Commissioner for Patents
United States Patent and Trademark Office
P.O. Box 1450
Alexandria, VA 22313-1450
www.uspto.gov

BASCH & NICKERSON LLP
1777 PENFIELD ROAD
PENFIELD, NY 14526

COPY MAILED

MAR 2 3 2009

OFFICE OF PETITIONS

In re Application of	:	
Robert W. GRAY, et al	:	
Application No. 11/419,287	:	DECISION ON PETITION
Filed: May 19, 2006	:	TO WITHDRAW
Attorney Docket No. 1008 023 306 0201	:	FROM RECORD
	:	

This is a decision on the Request to Withdraw as attorney or agent under 37 C.F.R. § 1.36(b) filed February 10, 2009.

The request is **NOT APPROVED**.

A review of the file record indicates that Michael J. Nickerson and Duane C. Basch do not have power of attorney in this patent application. See 37 C.F.R. § 10.40. Accordingly, the request to withdraw under 37 C.F.R. § 1.36(b) is not applicable.

All future communications from the Office will continue to be directed to the address indicated below until otherwise properly notified by the applicant.

Telephone inquires concerning this decision should be directed to the undersigned at 571-272-6735.

Diane Goodwyn
Petitions Examiner
Office of Petitions

cc: BIOPHAN TECHNOLOGIES, INC.
15 SCHOEN PLACE
PITTSFORD, NY 14534

SPE RESPONSE FOR CERTIFICATE OF CORRECTION

Paper No.: _____

DATE : 10/23/06

TO SPE OF : ART UNIT 2834

SUBJECT : Request for Certificate of Correction on Patent No.: 7,109,600 B1

A response is requested with respect to the accompanying request for a certificate of correction.

Please complete this form and return with file, within **7** days to:
Certificates of Correction Branch - PK 3-910
Palm location **7590** - Tel. No. 305-8201

With respect to the change(s) requested, correcting Office and/or Applicant's errors, should the patent read as shown in the certificate of correction? No new matter should be introduced, nor should the scope or meaning of the claims be changed.

Thank You For Your Assistance

Certificates of Correction Branch

The request for issuing the above-identified correction(s) is hereby:
Note your decision on the appropriate box.

- ☒ **Approved** — All changes apply.
- ☐ **Approved in Part** — Specify below which changes **do not** apply.
- ☐ **Denied** — State the reasons for denial below.

Comments:

SPE

2834
Art Unit

UNITED STATES PATENT AND TRADEMARK OFFICE

Commissioner for Patents
United States Patent and Trademark Office
P.O. Box 1450
Alexandria, VA 22313-1450
www.uspto.gov

INTERNATIONAL BUSINESS MACHINES CORPORATION
DEPT. 18G
BLDG. 300-482
2070 ROUTE 52
HOPEWELL JUNCTION, NY 12533

COPY MAILED

SEP 1 2 2008

OFFICE OF PETITIONS

In re Application of
Robert J. Purtell, et al.
Application No.: 11/419,300
Filed: May 19, 2006
Attorney Docket No.: None

ON PETITION

This is a decision on the petition, filed September 11, 2008, under 37 CFR 1.313(c)(2) to withdraw the above-identified application from issue after payment of the issue fee.

The petition is **GRANTED**.

The above-identified application is withdrawn from issue for consideration of a submission under 37 CFR 1.114 (request for continued examination). See 37 CFR 1.313(c)(2).

Petitioner is advised that the issue fee paid on August 18, 2008, cannot be refunded. If, however, this application is again allowed, petitioner may request that it be applied towards the issue fee required by the new Notice of Allowance.[1]

Telephone inquiries relating to this decision should be directed to the undersigned at (571) 272-3204.

The application is being referred to Technology Center AU 2818 for further processing of the request for continued examination under 37 CFR 1.114 and for consideration of the concurrently filed Information Disclosure Statement.

Sherry D. Brinkley
Petitions Examiner
Office of Petitions

[1] *The request to apply the issue fee to the new Notice may be satisfied by completing and returning the new Part B - Fee(s) Transmittal Form (along with any balance due at the time of submission). Petitioner is advised that the Issue Fee Transmittal Form must be completed and timely submitted to avoid abandonment of the application.*

UNITED STATES PATENT AND TRADEMARK OFFICE

COMMISSIONER FOR PATENTS
UNITED STATES PATENT AND TRADEMARK OFFICE
P.O. BOX 1450
ALEXANDRIA, VA 22313-1450
www.uspto.gov

DUBOIS, BRYANT, CAMPBELL & SCHWARTZ, LLP
700 LAVACA STREET
SUITE 1300
AUSTIN TX 78701

COPY MAILED

MAR 05 2007

OFFICE OF PETITIONS

In re Application of	:	
Drane, et al.	:	ON PETITION
Application No.: 11/419,317	:	
Filed: May 19, 2006	:	
Attorney Docket No.: 1120-701USPT	:	

A partial petition under 37 CFR 1.47(a) was received in the United States Patent and Trademark Office (Office) on November 1, 2006.

Petitioners are reminded that a grantable petition under 37 CFR 1.47(a) requires:

(1) a petition including proof of the pertinent facts establishing that the joint inventor refuses to join, or cannot be found or reached after diligent effort,
(2) a proper oath or Declaration executed by the available joint inventor(s),
(3) the petition fee of $200 as specified in 37 CFR § 1.17(g), and
(4) the last known address of the omitted inventor.

It appears that petitioners did not pay the $200.00 Rule 47(a) petition fee. In addition, the formal petition is missing. The Office received an "Affidavit of Facts under 37 CFR 1.47(a)" without a formal petition. A formal petition signed by an appropriate party is required.

The petition under 37 CFR 1.47(a) is **dismissed**.

Petitioners must submit a formal petition signed by an appropriate party and the petition fee within **TWO (2) months** of the mail date of this decision. **Failure to respond will result in abandonment of the application.**

Further correspondence with respect to this matter should be addressed as follows:

By mail: Mail Stop PETITION
Commissioner for Patents
Post Office Box 1450
Alexandria, VA 22313-1450

By hand: U.S. Patent and Trademark Office
Customer Service Window, Mail Stop Petition
Randolph Building
401 Dulany Street
Alexandria, VA 22314

By FAX: (571) 273-8300 - ATTN: Office of Petitions

Telephone inquiries should be directed to the undersigned at (571) 272-3230.

Shirene Willis Brantley

Shirene Willis Brantley
Senior Petitions Attorney
Office of Petitions

UNITED STATES PATENT AND TRADEMARK OFFICE

Commissioner for Patents
United States Patent and Trademark Office
P.O. Box 1450
Alexandria, VA 22313-1450
www.uspto.gov

DUBOIS, BRYANT, CAMPBELL & SCHWARTZ, LLP
700 LAVACA STREET
SUITE 1300
AUSTIN TX 78701

COPY MAILED

MAY 17 2007

OFFICE OF PETITIONS

In re Application of	:	
Drane, et al.	:	ON PETITION
Application No.: 11/419,317	:	
Filed: May 19, 2006	:	
Attorney Docket No.: 1120-701USPT	:	

This is a decision on the reconsideration petition under 37 CFR 1.47(a), filed April 19, 2007.

The petition is **DISMISSED**.

Any request for reconsideration of this decision must be submitted within TWO (2) MONTHS from the mail date of this decision. Extensions of time under 37 CFR 1.136(a) are permitted. Any response should be entitled "Request for Reconsideration of Petition Under 37 CFR 1.47(a)" and may include an oath or declaration executed by the inventor. **Failure to respond will result in abandonment of the application.**

The above-identified application was filed on May 19, 2006 without an executed oath or declaration. Accordingly, on June 1, 2006, a "Notice to File Missing Parts of Nonprovisional Application" was mailed, requiring an executed oath or declaration and a surcharge.

In response, on November 1, 2006, petitioners filed three month extension of time, a declaration executed by two of three joint inventors, the surcharge, and a Rule 47(a) petition without the petition fee. Because petitioners did not submit the petition fee, the petition was dismissed on March 5, 2007.

Petitioners submitted a reconsideration petition on April 19, 2007. Pursuant to petitioners' authorization, deposit account no. 50-3468 will be charged the required $200.00 Rule 47 petition fee.

A grantable petition under 37 CFR 1.47(a) requires:

(1) a petition including proof of the pertinent facts establishing that the joint inventor(s) refuses to join, or cannot be found or reached after diligent effort,

(2) a proper oath or Declaration executed by the available joint inventor(s),
(3) the fee of $200, and
(4) the last known address of the omitted inventor(s).

This petition lacks item (1).

As to item (1), applicants have failed to establish that non-signing inventor David Rowland cannot be reached. A showing of **diligence** is critical in obtaining Rule 47 status when an inventor cannot be located or reached.

The mailing to Rowland was returned because the addressee had moved and the USPS was unable to forward the mailing. One returned mailing does not rise to the level of diligence required to establish inability to locate an inventor.

Petitioners should engage in further efforts to locate Rowland. The following is a list of evidentiary sources that are commonly relied upon to prove inability to locate an inventor: searches of Internet databases; inquiries of local telephone directories; telegrams; and documented inquiries of last known employers. Every listed type of search need not be done. However, a diligent effort to find the inventor must be made.

Please provide documentary evidence relating to the attempts to locate Rowland. Individuals with first hand knowledge of pertinent events should provide a statement of facts.

Further correspondence with respect to this matter should be addressed as follows:

By mail: Mail Stop PETITION
Commissioner for Patents
Post Office Box 1450
Alexandria, VA 22313-1450

By hand: U.S. Patent and Trademark Office
Customer Service Window, Mail Stop Petition
Randolph Building
401 Dulany Street
Alexandria, VA 22314

By FAX: (571) 273-8300 - ATTN: Office of Petitions

Telephone inquiries should be directed to the undersigned at (571) 272-3230.

Shirene Willis Brantley
Senior Petitions Attorney
Office of Petitions

UNITED STATES PATENT AND TRADEMARK OFFICE

COMMISSIONER FOR PATENTS
UNITED STATES PATENT AND TRADEMARK OFFICE
P.O. BOX 1450
ALEXANDRIA, VA 22313-1450
www.uspto.gov

COPY MAILED
NOV 2 0 2006
OFFICE OF PETITIONS

DUBOIS, BRYANT, CAMPBELL & SCHWARTZ, LLP
700 LAVACA STREET
SUITE 1300
AUSTIN, TX 78701

In re Application of	:
Drane, et al.	: DECISION REFUSING STATUS
Application No. 11/419,324	: UNDER 37 CFR 1.47(a)
Filed: May 19, 2006	:
Atty. Dkt. No.: 1120-702USPT	:
For: SYSTEM AND METHOD FOR	:
AUTHORING AND LEARNING	:

This decision is in response to the petition under 37 CFR 1.47(a) filed November 1, 2006.

The petition under 37 CFR 1.47(a) is **DISMISSED**.

Petitioner(s) is given TWO MONTHS from the mailing date of this decision to reply, correcting the below-noted deficiencies. Any reply should be entitled "Request for Reconsideration of Petition Under 37 CFR 1.47(a)," and should only address the deficiencies noted herein. The reply under 37 CFR 1.47(a) may include an oath or declaration executed by the non-signing inventors. Any extensions of time will be governed by 37 CFR 1.136(a).

The above-identified application was filed without an executed oath or declaration. Accordingly, a Notice to File Missing Parts of Nonprovisional Application (Notice) was mailed June 1, 2006. The Notice required a surcharge and an executed oath or declaration.

The instant petition was submitted without the required petition fee of $200.00 and the required surcharge ($130 for a large entity or $65.00 for a small entity).

As submission of the petition fee is a prerequisite prior to treatment on the merits of a petition submitted under 37 CFR 1.47, the instant petition is subject to dismissal.

Any renewed petition must include the required fees.

Further correspondence with respect to this matter should be addressed as follows:

By mail: Mail Stop Petition
Commissioner for Patents
P.O. Box 1450
Alexandria, VA 22313-1450

By facsimile: (571) 273-8300

By hand: U.S. U.S. Patent and Trademark Office
Customer Service Window
Mail Stop Petition
Randolph Building
401 Dulaney Street
Alexandria, VA 22314

Telephone inquiries related to this decision may be directed to the undersigned at (571) 272-3205.

Alesia M. Brown
Petitions Attorney
Office of Petitions

UNITED STATES PATENT AND TRADEMARK OFFICE

COMMISSIONER FOR PATENTS
UNITED STATES PATENT AND TRADEMARK OFFICE
P.O. BOX 1450
ALEXANDRIA, VA 22313-1450
www.uspto.gov

COPY MAILED
DEC 15 2006
OFFICE OF PETITIONS

DUBOIS, BRYANT, CAMPBELL & SCHWARTZ, LLP
700 LAVACA STREET
SUITE 1300
AUSTIN, TX 78701

In re Application of	:
Drane, et al.	: DECISION REFUSING STATUS
Application No. 11/419,324	: UNDER 37 CFR 1.47(a)
Filed: May 19, 2006	:
Atty. Dkt. No.: 1120-702USPT	:
For: SYSTEM AND METHOD FOR	:
AUTHORING AND LEARNING	:

This decision is in response to the renewed petition under 37 CFR 1.47(a) filed November 27, 2006.

The petition under 37 CFR 1.47(a) is **DISMISSED**.

Petitioners are given TWO MONTHS from the mailing date of this decision to reply, correcting the below-noted deficiencies. Any reply should be entitled "Request for Reconsideration of Petition Under 37 CFR 1.47(a)," and should only address the deficiencies noted herein. The reply under 37 CFR 1.47(a) may include an oath or declaration executed by the non-signing inventors. Any extensions of time will be governed by 37 CFR 1.136(a).

The above-identified application was filed without an executed oath or declaration. Accordingly, a Notice to File Missing Parts of Nonprovisional Application (Notice) was mailed June 1, 2006. The Notice required a surcharge and an executed oath or declaration.

A grantable petition under 37 CFR 1.47(a) requires: (1) proof that the non-signing inventor cannot be reached or refuses to sign the oath or declaration after having been presented with the application papers (specification, claims and drawings); (2) an acceptable oath or declaration in compliance with 35 U.S.C. §§ 115 and 116; (3) the petition fee; and (4) a statement of the last known address of the non-signing inventor.

Petitioners have failed to establish that the non-signing inventor received a complete copy of the application papers (specification, including claims, drawings, and oath or declaration) and thereafter refused to execute an oath or declaration, or, that the non-signing

inventor cannot be reached or located for presentation of the application papers.

The instant petition fails to set forth any circumstances that establish either that the non-signing inventor is unavailable or has otherwise refused to execute the oath or declaration for the instant petition.

To the extent that petitioners allege that the non-signing inventor has refused to execute the oath or declaration, petitioners are reminded that before a refusal to sign an oath or declaration can be alleged, it must be demonstrated that a *bona fide* effort has been made to present a complete copy of the application papers (specification, including claims, drawings, and oath or declaration) to the non-signing inventor at the non-signing inventor's last known address, typically a residential address.

Any renewed petition should be accompanied by evidence to establish that the non-signing inventor was sent a complete copy of the application papers (specification, claims, drawings, and oath or declaration) and thereafter refused to execute the declaration. Petitioners may wish to provide the Office copies of letters sent to the inventor indicating the enclosure of the application papers (specification, claims, drawings, and oath or declaration). If after the inventor receives the application papers and requests to execute the oath or declaration are refused, these facts should be set forth in a statement of facts signed by the person to whom the refusals were made and detailing with specificity the exact manner of the refusals. If a written refusal has been made, a copy of the written refusal should be included on renewed petition.

To the extent that petitioners allege the non-signing inventor cannot be reached or located, petitioners are reminded that where inability to reach or locate a non-signing inventor is alleged, petitioners are required to establish that diligent effort was made to locate the non-signing inventor and provide the non-signing inventor with a complete copy of the patent application (specification, including claims, drawings, and oath or declaration). Petitioners have not established that diligent effort has been made to locate the non-signing inventor for presentation of the application papers.

Any renewed petition must be supported by evidence that sufficiently establishes that despite diligent effort, the non-signing inventor cannot be located. A statement of facts should be submitted that fully describes the exact facts that are

relied on to establish that a *diligent effort* was made to locate the non-signing inventor. The statement of facts must be signed, where at all possible, by a person having *firsthand knowledge* of the facts recited therein. Statements based on hearsay, will not normally be accepted. At the very least, a search of the internet, human resource records, telephone directories, etc. should be undertaken in regions where it is suspected the non-signing inventor may reside. Petitioners should reference and supply evidence of any such searches in a renewed petition. *See*, MPEP 409.03(d).

Further correspondence with respect to this matter should be addressed as follows:

By mail:	Mail Stop Petition Commissioner for Patents P.O. Box 1450 Alexandria, VA 22313-1450
By facsimile:	(571) 273-8300
By hand:	U.S. U.S. Patent and Trademark Office Customer Service Window Mail Stop Petition Randolph Building 401 Dulaney Street Alexandria, VA 22314

Telephone inquiries related to this decision may be directed to the undersigned at (571) 272-3205.

Alesia M. Brown
Petitions Attorney
Office of Petitions

UNITED STATES PATENT AND TRADEMARK OFFICE

COMMISSIONER FOR PATENTS
UNITED STATES PATENT AND TRADEMARK OFFICE
P.O. BOX 1450
ALEXANDRIA, VA 22313-1450
www.uspto.gov

COPY MAILED
APR 30 2007
OFFICE OF PETITIONS

DUBOIS, BRYANT, CAMPBELL & SCHWARTZ, LLP
700 LAVACA STREET
SUITE 1300
AUSTIN, TX 78701

In re Application of	:
Drane, et al.	: DECISION REFUSING STATUS
Application No. 11/419,324	: UNDER 37 CFR 1.47(a)
Filed: May 19, 2006	:
Atty. Dkt. No.: 1120-702USPT	:
For: SYSTEM AND METHOD FOR	:
AUTHORING AND LEARNING	:

This decision is in response to the renewed petition under 37 CFR 1.47(a) filed February 13, 2007.

The petition under 37 CFR 1.47(a) is **DISMISSED**.

Petitioners are given TWO MONTHS from the mailing date of this decision to reply, correcting the below-noted deficiencies. Any reply should be entitled "Request for Reconsideration of Petition Under 37 CFR 1.47(a)," and should only address the deficiencies noted herein. The reply under 37 CFR 1.47(a) may include an oath or declaration executed by the non-signing inventors. Any extensions of time will be governed by 37 CFR 1.136(a).

The above-identified application was filed without an executed oath or declaration. Accordingly, a Notice to File Missing Parts of Nonprovisional Application (Notice) was mailed June 1, 2006. The Notice required a surcharge and an executed oath or declaration.

A grantable petition under 37 CFR 1.47(a) requires: (1) proof that the non-signing inventor cannot be reached or refuses to sign the oath or declaration after having been presented with the application papers (specification, claims and drawings); (2) an acceptable oath or declaration in compliance with 35 U.S.C. §§ 115 and 116; (3) the petition fee; and (4) a statement of the last known address of the non-signing inventor.

Petitioners have failed to establish that the non-signing inventor received a complete copy of the application papers (specification, including claims, drawings, and oath or declaration) and thereafter refused to execute an oath or declaration, or, that the non-signing

inventor cannot be reached or located for presentation of the application papers.

As previously stated, petitioners fail to set forth any circumstances that establish either that the non-signing inventor is unavailable or has otherwise refused to execute the oath or declaration for the instant petition. However, the copy of the envelope containing a mailing to the non-signing inventor submitted herewith indicates that the named recipient had moved and that the postal service was unable to forwarded the package as there was no forwarding address available.

To the extent that petitioners allege that the non-signing inventor has refused to execute the oath or declaration, petitioners are reminded that before a refusal to sign an oath or declaration can be alleged, it must be demonstrated that a *bona fide* effort has been made to present a complete copy of the application papers (specification, including claims, drawings, and oath or declaration) to the non-signing inventor at the non-signing inventor's last known address, typically a residential address.

Any renewed petition should be accompanied by evidence to establish that the non-signing inventor was sent a complete copy of the application papers (specification, claims, drawings, and oath or declaration) and thereafter refused to execute the declaration. Petitioners may wish to provide the Office copies of letters sent to the inventor indicating the enclosure of the application papers (specification, claims, drawings, and oath or declaration). If after the inventor receives the application papers and requests to execute the oath or declaration are refused, these facts should be set forth in a statement of facts signed by the person to whom the refusals were made and detailing with specificity the exact manner of the refusals. If a written refusal has been made, a copy of the written refusal should be included on renewed petition.

To the extent that petitioners allege the non-signing inventor cannot be reached or located, petitioners are reminded that where inability to reach or locate a non-signing inventor is alleged, petitioners are required to establish that diligent effort was made to locate the non-signing inventor and provide the non-signing inventor with a complete copy of the patent application (specification, including claims, drawings, and oath or declaration). Petitioners have not established that diligent effort has been made to locate the non-signing inventor for presentation of the application papers.

Any renewed petition must be supported by evidence that sufficiently establishes that despite diligent effort, the non-signing inventor cannot be located. A statement of facts should be submitted that fully describes the exact facts that are relied on to establish that a *diligent effort* was made to locate the non-signing inventor. The statement of facts must be signed, where at all possible, by a person having *firsthand knowledge* of the facts recited therein. Statements based on hearsay, will not normally be accepted. At the very least, a search of the internet, human resource records, telephone directories, etc. should be undertaken in regions where it is suspected the non-signing inventor may reside. Petitioners should reference and supply evidence of any such searches in a renewed petition. *See*, MPEP 409.03(d).

Further correspondence with respect to this matter should be addressed as follows:

By mail:	Mail Stop Petition Commissioner for Patents P.O. Box 1450 Alexandria, VA 22313-1450
By facsimile:	(571) 273-8300
By hand:	U.S. U.S. Patent and Trademark Office Customer Service Window Mail Stop Petition Randolph Building 401 Dulaney Street Alexandria, VA 22314

Telephone inquiries related to this decision may be directed to the undersigned at (571) 272-3205.

Alesia M. Brown
Petitions Attorney
Office of Petitions

UNITED STATES PATENT AND TRADEMARK OFFICE

Commissioner for Patents
United States Patent and Trademark Office
P.O. Box 1450
Alexandria, VA 22313-1450
www.uspto.gov

COPY MAILED

SEP 2 6 2008

OFFICE OF PETITIONS

DUBOIS, BRYANT, CAMPBELL & SCHWARTZ, LLP
700 LAVACA STREET
SUITE 1300
AUSTIN TX 78701

In re Application of	:	
Drane, et al.	:	DECISION REFUSING STATUS
Application No. 11/419,324	:	UNDER 37 CFR 1.47(a)
Filed: May 19, 2006	:	
Attorney Docket No. 1120-702USPT	:	

This is in response to the renewed petition under 37 CFR 1.47(a), filed June 26, 2007.

The petition is dismissed.

Rule 47 applicant is given TWO MONTHS from the mailing date of this decision to reply, correcting the below-noted deficiencies. Any reply should be entitled "Request for Reconsideration of Petition Under 37 CFR 1.47(a)," and should only address the deficiencies noted below, except that the reply may include an oath or declaration executed by the non-signing inventor. **FAILURE TO RESPOND WILL RESULT IN ABANDONMENT OF THE APPLICATION.** Any extensions of time will be governed by 37 CFR 1.136(a).

A grantable petition under 37 CFR 1.47(a) requires: (1) proof that the non-signing inventor cannot be reached or refuses to sign the oath or declaration after having been presented with the application papers (specification, claims and drawings); (2) an acceptable oath or declaration in compliance with 35 U.S.C. §§ 115 and 116; (3) the petition fee; and (4) a statement of the last known address of the non-signing inventor. Applicant lacks items (1) and (2) set forth above.

As to item (1), the applicable statute (35 U.S.C.§ 116) requires that a "diligent effort" have been expended in attempting to find or reach the non-signing inventor. *See* MPEP 409.03(a). The showing currently fails to demonstrate, with a documented showing, that a diligent effort was made to find or locate non-signing inventor Rowland, such that the declaration can be accepted under 37 CFR 1.47(a). Where inability to find or locate a named inventor is alleged, a statement of facts should be submitted that fully describes the exact facts which are relied on to establish that a *diligent effort* was made to locate the inventor.

Petitioners state that a private investigator was engaged to assist in locating the non-signing inventor and have included a copy of the inventor's report which includes a compilation of possible addresses associated with the non-signing inventor.

Petitioners state "[w]e have unsuccessfully attempted to locate David Rowland at the addresses and phone numbers included in the report."

Petitioners, however, do not provide any details regarding the manner in which efforts were made to locate the inventor at the addresses and phone numbers contained in the report. For instance, did petitioners mail documents to the addresses or call the phone numbers contained on the report? If so, the

details concerning these efforts should be set forth in a statement of facts by the person having firsthand knowledge.

Thus, petitioners have not demonstrated that all efforts were expended in trying to locate inventor non-signing Rowland. The petition fails to indicate that correspondence was ever mailed unsuccessfully to the inventor's last known address. Therefore, at the very least, petitioner should mail correspondence to the inventor's last known address, return receipt and/or forwarding address requested. If a forwarding address is provided, petitioner should then mail a complete copy of the application papers (specification, claims, drawings, oath, etc.) to Mr. Rowland's address, return receipt requested, along with a cover letter of instructions which includes a deadline or a statement that no response will constitute a refusal. This sort of ultimatum lends support to a finding of refusal by conduct. If the papers are returned and all other attempts to locate or reach the inventor, e.g., through personnel records, co-workers, E-mail, the Internet or the telephone, etc., continue to fail, then applicant will have established that the inventor cannot be reached after diligent effort or has refused to join in the application. **The statements of facts must be signed, where at all possible, by a person having firsthand knowledge of the facts recited therein and should be accompanied by documentary evidence in support of the statement of facts.** It is important that the forthcoming communication contain statements of fact as opposed to conclusions.

Further correspondence with respect to this matter should be addressed as follows:

By mail: Mail Stop PETITIONS
Commissioner for Patents
Post Office Box 1450
Alexandria, VA 22313-1450

By hand: Customer Service Window
Mail Stop Petitions
Randolph Building
401 Dulany Street
Alexandria, VA 22314

By fax: (571) 273-8300
ATTN: Office of Petitions

Telephone inquiries should be directed to the undersigned at (571) 272-3205.

Alesia M. Brown
Petitions Attorney
Office of Petitions

UNITED STATES PATENT AND TRADEMARK OFFICE

Commissioner for Patents
United States Patent and Trademark Office
P.O. Box 1450
Alexandria, VA 22313-1450
www.uspto.gov

DUBOIS, BRYANT, CAMPBELL & SCHWARTZ, LLP
700 LAVACA STREET
SUITE 1300
AUSTIN TX 78701

COPY MAILED

DEC 19 2008

OFFICE OF PETITIONS

In re Application of	:	
Drane, et al.	:	DECISION GRANTING STATUS
Application No. 11/419,324	:	UNDER 37 CFR 1.47(a)
Filed: May 19, 2006	:	
Attorney Docket No. 1120-702USPT	:	

This is in response to the renewed petition under 37 CFR 1.47(a), filed November 25, 2008.

The petition is **GRANTED.**

Petitioner has shown that the non-signing inventor cannot be located to join in the filing of the above-identified application.

The application and papers have been reviewed and found in compliance with 37 CFR 1.47(a). This application is hereby accorded Rule 1.47(a) status.

As provided in 37 CFR 1.47(c), this Office will forward notice of this application's filing to the non-signing inventor at the address given in the petition. Notice of the filing of this application will also be published in the Official Gazette.

This application is being referred to the Office of Patent Application Processing for pre-examination processing.

Telephone inquiries regarding this decision should be directed to the undersigned at (571) 272-3205.

Alesia M. Brown
Petitions Attorney
Office of Petitions

UNITED STATES PATENT AND TRADEMARK OFFICE

Commissioner for Patents
United States Patent and Trademark Office
P.O. Box 1450
Alexandria, VA 22313-1450
www.uspto.gov

David Rowland
2520 Enfield Road, Apt. B,
Austin Texas 78703

COPY MAILED

DEC 19 2008

OFFICE OF PETITIONS

In re Application of
Drane, et al.
Application No. 11/419,324
Filed: May 19, 2006
Attorney Docket No. 1120-702USPT

Dear Sir:

You are named as a joint inventor in the above-identified United States patent application, filed under the provisions of 35 U.S.C. 116 (United States Code), and 37 CFR 1.47(a), Rules of Practice in Patent Cases. Should a patent be granted on the application you will be designated therein as a joint inventor.

As a named inventor you are entitled to inspect any paper in the file wrapper of the application, order copies of all or any part thereof (at a prepaid cost per 37 CFR 1.19) or make your position of record in the application. Alternatively, you may arrange to do any of the preceding through a registered patent attorney or agent presenting written authorization from you. If you care to join the application, counsel of record (see below) would presumably assist you. Joining the application would entail the filing of an appropriate oath or declaration by you pursuant to 37 CFR 1.63.

Requests for information regarding your application should be directed to the File Information Unit at (703) 308-2733. Information regarding how to pay for and order a copy of the application, or a specific paper in the application, should be directed to the Certification Division at (571) 272-3150 or 1 (800) 972-6382 (outside the Washington, DC area).

Alesia M. Brown
Petitions Attorney
Office of Petitions
571-272-3205

cc: DUBOIS, BRYANT, CAMPBELL & SCHWARTZ, LLP
700 LAVACA STREET
SUITE 1300
AUSTIN TX 78701

UNITED STATES PATENT AND TRADEMARK OFFICE

UNITED STATES DEPARTMENT OF COMMERCE
United States Patent and Trademark Office
Address: COMMISSIONER FOR PATENTS
P.O. Box 1450
Alexandria, Virginia 22313-1450
www.uspto.gov

SHARP KABUSHIKI KAISHA
C/O KEATING & BENNETT, LLP
1800 Alexander Bell Drive
SUITE 200
Reston, VA 20191

Mail Date: 04/20/2010

Applicant	: Takashi TAKAGI	: DECISION ON REQUEST FOR
Patent Number	: 7586579	: RECALCULATION of PATENT
Issue Date	: 09/08/2009	: TERM ADJUSTMENT IN VIEW
Appliction No	: 11/419,339	: OF WYETH AND NOTICE OF INTENT TO
Filed	: 05/19/2006	: ISSUE CERTIFICATE OF CORRECTION
		:

The Request for Recalculation is **GRANTED** to the extent indicated.

The patent term adjustment has been determined to be **425** days. The USPTO will *sua sponte* issue a certificate of correction reflecting the amount of PTA days determined by the recalculation.

Prior to the issuance of the certificate of correction, the USPTO will afford patentee an opportunity to be heard and request reconsideration. Accordingly, patentee has **one month or thirty (30) days**, whichever is longer, to file a request for reconsideration of this patent term adjustment calculation. See 35 U.S.C. 154(b)(3)(B)(ii) and 37 CFR 1.322(a)(4). No extensions of time will be granted under 37 CFR 1.136.

Patentee should use document code PET.OP if electronically filing a request for reconsideration of this patent term adjustment calculation. The patentee must also include the information required by 37 CFR 1.705(b)(2) and the fee required by 37 CFR 1.18(e). If patentee does not file a timely request for reconsideration of this patent term adjustment calculation including the information required by 37 CFR 1.705(b)(2) and the fee required by 37 CFR 1.18(e), the USPTO will issue a certificate of correction reflecting the PTA determination noted above.

Patentee should be aware that in order to preserve the right to review in the United States District Court for the District of Columbia of the USPTO patent term adjustment determination, patentee must ensure that he or she also take the steps required under 35 U.S.C. 154(b)(4)(A) in a timely manner. Nothing in the request for recalculation should be construed as providing an alternative time frame for commencing a civil action under 35 U.S.C. 154(b)(4)(A).

Any questions concerning this decision should be directed to the Office of Patent Legal Administration at 571-272-7702.

UNITED STATES DEPARTMENT OF COMMERCE
Patent and Trademark Office
ASSISTANT SECRETARY OF COMMERCE AND
COMMISSIONER OF PATENTS AND TRADEMARKS
Washington, DC 20231

5/6/09

Patent No. :7503375
Inventor(s) :Mike Schuren
Issued : 3/17/2009
Title : METHOD AND APPARATUS FOR CONTINUOUSLY CASTING THIN STRIP
atty.doc./File No.

Request for Certificates of Correction

Consideration has been given to your request for the issuance of a Certificate of Correction, for the above – identified patent under the provisions of CFR 1.322.

Inspection of the application for the patent reveals claim 25 col.16 line 23-24 is printed in accordance with the record and please show evidence of an amendment or document. Therefore being no fault on the Patent and Trademark Office, It has no authority to issue a certificate of correction under the provision of 1.322.

In view of the forgoing, your request in this matter, is hereby denied.

Future written correspondence concerning this matter should be filed and directed to Decisions & Certificates of Correction Branch.

Henry Randall
Mary Diggs
Decisions & Certificates
of Correction Branch
(703) 308-9390 Ext. 108

Hahn Loeser 7 Parks LLP
One GOJO Plaza Suite 300
Akron ,Ohio 44311-1076

HR/MD

SPE RESPONSE FOR CERTIFICATE OF CORRECTION

Paper No.: _____

DATE : **7/16/09**

TO SPE OF : ART UNIT **2187 (2100)**

SUBJECT : Request for Certificate of Correction for Appl. No.: **11/419,374** Patent No.: **7,478,193**

Attn: Hiep Nguyen

Please respond to this request for a certificate of correction within 7 days.

FOR IFW FILES:

Please review the requested changes/corrections as shown in the **COCIN** document(s) in the IFW application image. No new matter should be introduced, nor should the scope or meaning of the claims be changed.

Please complete the response (see below) and forward the completed response to scanning using document code **COCX**.

FOR PAPER FILES:

Please review the requested changes/corrections as shown in the attached certificate of correction. Please complete this form (see below) and forward it with the file to:

Certificates of Correction Branch (C of C)
South Tower - 9A22
Palm Location 7580

Ernest C. White, LIE
Certificates of Correction Branch
703-308-9390 ext.122

Thank You For Your Assistance

The request for issuing the above-identified correction(s) is hereby:
Note your decision on the appropriate box.

- ☐ **Approved** — **All** changes apply.
- ☐ **Approved in Part** — Specify below which changes **do not** apply.
- ☒ **Denied** — State the reasons for denial below.

Comments: This is because the actual request for Certification of Correction belongs to the patent application 10/919,491 (patent no. 7,299,330), instead.

/Christian Chace/ — **SPE**

2187 — **Art Unit**

UNITED STATES DEPARTMENT OF COMMERCE
COMMISSIONER FOR PATENTS
P. O. BOX 1450
ALEXANDRIA, VA 22313-1450

Date	: 01/14/2010
Patent No.	: 7,478,193 B2
Serial No.	: 11/419,374
Inventor(s)	: Becca et al.
Issue Date	: January 14, 2009
Title	: **METHOD AND APPARATUS FOR INTERCONNECTING CONTENT ADDRESSABLE MEMORY DEVICES**
Doc./File No.	: **PAT 3415A-2**

Re: Reconsideration for Certificate of Correction

Consideration has been given your request for a certificate of correction, for the above-identified patent under the provisions of Rule 1.322.

Respecting the alleged error(s) in your request, your request is denied because the actual request for a certificate of correction belongs to the patent application 10/919,491 (patent No. 7,299,330), instead. Therefore, no correction is in order here, unless a cover letter and SB44/1050 form(s) with matching Patent and Serial Numbers are provided.

Further consideration will be given concerning this matter upon receipt of a request for **Reconsideration** (reconsideration should be accompanied by supporting document(s) such as, amendment, postcard receipt, 1449/892, etc.) and should be filed and directed to Decisions & Certificates of Correction Branch.

Ernest C. White, *LIE* (703) 756-1590
Mary F. Diggs, *Supervisor* (703) 756-1580
Decisions & Certificates of Correction Branch

BORDEN LADNER GERVAIS LLP
Gail C. Silver
1100-100 QUEEN ST
OTTAWA ON K1P 1J9 CA CANADA

ecw

UNITED STATES DEPARTMENT OF COMMERCE
COMMISSIONER FOR PATENTS
P. O. BOX 1450
ALEXANDRIA, VA 22313-1450

Date	: 3/3/2010
Patent No.	: 7, 478,193 B2
Serial No.	: 11/419,374
Inventor(s)	: BECCA et al.
Issue Date	: January 13, 2009
Title	: **METHOD AND APPARATUS FOR INTERCONNECTING CONTENT ADDRESSABLE MEMORY DEVICES**
Doc./File No.	: **PAT 3415A-2**

Re: Reconsideration for Certificate of Correction

Consideration has been given your request for a certificate of correction, for the above-identified patent under the provisions of Rule 1.322.

Respecting, the alleged error in the Related U.S. Application Data, referring to the most recent Bib Data sheet entered and dated on 9/23/08, which was also initialed and dated by the examiner reveals that the Continuing Data is not acknowledged. Therefore, the patent is printed in accordance with the record. No correction is in order here.

In view of the foregoing, your request is hereby denied.

Further consideration will be given concerning this matter upon receipt of a request for **Reconsideration** (reconsideration should be accompanied by supporting document(s) such as, amendment, postcard receipt, 1449/892, etc.) and should be filed and directed to Decisions & Certificates of Correction Branch.

Ernest C. White, *LIE* (703) 756-1590
Mary F. Diggs, *Supervisor* (703) 756-1580
Decisions & Certificates of Correction Branch

BORDEN LADNER GERVAIS LLP
Gail C. Silver
1100-100 QUEEN ST
OTTAWA ON K1P 1J9 CA CANADA

ecw

UNITED STATES PATENT AND TRADEMARK OFFICE

UNITED STATES DEPARTMENT OF COMMERCE
United States Patent and Trademark Office
Address: COMMISSIONER FOR PATENTS
P.O. Box 1450
Alexandria, Virginia 22313-1450
www.uspto.gov

WARNER NORCROSS & JUDD LLP
900 FIFTH THIRD CENTER
111 LYON STREET, N.W.
GRAND RAPIDS, MI 49503-2487

Mail Date: 04/21/2010

Applicant	: Marc F. Oosterlinck	: DECISION ON REQUEST FOR
Patent Number	: 7594348	: RECALCULATION of PATENT
Issue Date	: 09/29/2009	: TERM ADJUSTMENT IN VIEW
Appliction No	: 11/419,377	: OF WYETH AND NOTICE OF INTENT TO
Filed	: 05/19/2006	: ISSUE CERTIFICATE OF CORRECTION
		:

The Request for Recalculation is **GRANTED** to the extent indicated.

The patent term adjustment has been determined to be **0** days. The USPTO will *sua sponte* issue a certificate of correction reflecting the amount of PTA days determined by the recalculation.

Prior to the issuance of the certificate of correction, the USPTO will afford patentee an opportunity to be heard and request reconsideration. Accordingly, patentee has **one month or thirty (30) days**, whichever is longer, to file a request for reconsideration of this patent term adjustment calculation. See 35 U.S.C. 154(b)(3)(B)(ii) and 37 CFR 1.322(a)(4). No extensions of time will be granted under 37 CFR 1.136.

Patentee should use document code PET.OP if electronically filing a request for reconsideration of this patent term adjustment calculation. The patentee must also include the information required by 37 CFR 1.705(b)(2) and the fee required by 37 CFR 1.18(e). If patentee does not file a timely request for reconsideration of this patent term adjustment calculation including the information required by 37 CFR 1.705(b)(2) and the fee required by 37 CFR 1.18(e), the USPTO will issue a certificate of correction reflecting the PTA determination noted above.

Patentee should be aware that in order to preserve the right to review in the United States District Court for the District of Columbia of the USPTO patent term adjustment determination, patentee must ensure that he or she also take the steps required under 35 U.S.C. 154(b)(4)(A) in a timely manner. Nothing in the request for recalculation should be construed as providing an alternative time frame for commencing a civil action under 35 U.S.C. 154(b)(4)(A).

Any questions concerning this decision should be directed to the Office of Patent Legal Administration at 571-272-7702.

UNITED STATES PATENT AND TRADEMARK OFFICE

Commissioner for Patents
United States Patent and Trademark Office
P.O. Box 1450
Alexandria, VA 22313-1450
www.uspto.gov

BINGHAM MCHALE LLP
2700 MARKET TOWER
10 WEST MARKET STREET
INDIANAPOLIS IN 46204-4900

MAILED

MAR 29 2010

OFFICE OF PETITIONS

In re Application of	:	
Danny Filipovich et al	:	
Application No. 11/419,378	:	DECISION GRANTING PETITION
Filed: May 19, 2006	:	UNDER 37 CFR 1.313(c)(2)
Attorney Docket No. 8810-58480	:	

This is a decision on the petition under 37 CFR 1.313(c)(2), filed March 29, 2010, to withdraw the above-identified application from issue after payment of the issue fee.

The petition is **GRANTED**.

The above-identified application is withdrawn from issue for consideration of a submission under 37 CFR 1.114 (request for continued examination). *See* 37 CFR 1.313(c)(2).

Petitioner is advised that the issue fee paid on January 29, 2010 cannot be refunded. If, however, this application is again allowed, petitioner may request that it be applied towards the issue fee required by the new Notice of Allowance.[1]

Telephone inquiries should be directed to the undersigned at (571) 272-3208.

This application is being referred to Technology Center AU 2878 for processing of the request for continued examination under 37 CFR 1.114/amendment, via the Office of PCT Legal for consideration of the petition under 37 CFR 1.78(a)(3) submitted on March 29, 2010.

/Karen Creasy/
Karen Creasy
Petitions Examiner
Office of Petitions

---

[1] *The request to apply the issue fee to the new Notice may be satisfied by completing and returning the new Part B – Fee(s) Transmittal Form (along with any balance due at the time of submission). Petitioner is advised that the Issue Fee Transmittal Form* ***must*** *be completed and timely submitted to avoid abandonment of the application.*

UNITED STATES PATENT AND TRADEMARK OFFICE

UNITED STATES DEPARTMENT OF COMMERCE
United States Patent and Trademark Office
Address: COMMISSIONER FOR PATENTS
P.O. Box 1450
Alexandria, Virginia 22313-1450
www.uspto.gov

Morgan, Lewis & Bockius LLP/Google
2 Palo Alto Square
3000 El Camino Real, Suite 700
Palo Alto, CA 94306

Mail Date: 04/20/2010

Applicant	: Derek L. Collison	: DECISION ON REQUEST FOR
Patent Number	: 7627828	: RECALCULATION of PATENT
Issue Date	: 12/01/2009	: TERM ADJUSTMENT IN VIEW
Appliction No	: 11/419,407	: OF WYETH AND NOTICE OF INTENT TO
Filed	: 05/19/2006	: ISSUE CERTIFICATE OF CORRECTION
		:

The Request for Recalculation is **GRANTED** to the extent indicated.

The patent term adjustment has been determined to be **299** days. The USPTO will *sua sponte* issue a certificate of correction reflecting the amount of PTA days determined by the recalculation.

Prior to the issuance of the certificate of correction, the USPTO will afford patentee an opportunity to be heard and request reconsideration. Accordingly, patentee has **one month or thirty (30) days**, whichever is longer, to file a request for reconsideration of this patent term adjustment calculation. See 35 U.S.C. 154(b)(3)(B)(ii) and 37 CFR 1.322(a)(4). No extensions of time will be granted under 37 CFR 1.136.

Patentee should use document code PET.OP if electronically filing a request for reconsideration of this patent term adjustment calculation. The patentee must also include the information required by 37 CFR 1.705(b)(2) and the fee required by 37 CFR 1.18(e). If patentee does not file a timely request for reconsideration of this patent term adjustment calculation including the information required by 37 CFR 1.705(b)(2) and the fee required by 37 CFR 1.18(e), the USPTO will issue a certificate of correction reflecting the PTA determination noted above.

Patentee should be aware that in order to preserve the right to review in the United States District Court for the District of Columbia of the USPTO patent term adjustment determination, patentee must ensure that he or she also take the steps required under 35 U.S.C. 154(b)(4)(A) in a timely manner. Nothing in the request for recalculation should be construed as providing an alternative time frame for commencing a civil action under 35 U.S.C. 154(b)(4)(A).

Any questions concerning this decision should be directed to the Office of Patent Legal Administration at 571-272-7702.

UNITED STATES PATENT AND TRADEMARK OFFICE

Commissioner for Patents
United States Patent and Trademark Office
P.O. Box 1450
Alexandria, VA 22313-1450
www.uspto.gov

MICHAEL A. CATANIA
CALLAWAY GOLF COMPANY
2180 RUTHERFORD ROAD
CARLSBAD CA 92008-7328

COPY MAILED

MAY 23 2008

In re Application of	:	
Kennedy et al.	:	
Application No. 11/419,432	:	DECISION ON PETITION
Filed: May 19, 2006	:	
Attorney Docket No. TF1061	:	

This is a decision on the petition under the unintentional provisions of 37 CFR 1.137(b), filed April 30, 2008, to revive the above-identified application.

The petition is **GRANTED**.

The petition satisfies the requirements of 37 CFR 1.137(b) in that petitioner has supplied (1) the reply in the form of an Amendment, (2) the petition fee, and (3) a proper statement of unintentional delay.

Telephone inquiries concerning this decision should be directed to the undersigned at (571) 272-3206.

This matter is being referred to Technology Center 2854 for further examination on the merits.

Liana Walsh
Petitions Examiner
Office of Petitions

UNITED STATES PATENT AND TRADEMARK OFFICE

Commissioner for Patents
United States Patent and Trademark Office
P.O. Box 1450
Alexandria, VA 22313-1450
www.uspto.gov

MEADWESTVACO CORPORATION
ATTN: IP LEGAL DEPARTMENT
1021 MAIN CAMPUS DRIVE
RALEIGH NC 27606

MAILED

JUL 10 2009

OFFICE OF PETITIONS

In re Application of	:	
John M. Holley, Jr.	:	
Application No. 11/419,446	:	DECISION ON PETITION
Filed: May 19, 2006	:	
Attorney Docket No. D-3180-1-US	:	

This is a decision on the petition under the unintentional provisions of 37 CFR 1.137(b), filed September 2, 2008, to revive the above-identified application.

The petition is **GRANTED**.

This application became abandoned for failure to timely pay the issue and publication fees on or before August 1, 2008, as required by the Notice of Allowance and Fee(s) Due mailed May 1, 2008. Accordingly, the date of abandonment of this application is August 2, 2008. A Notice of Abandonment was mailed August 27, 2008.

The petition satisfies the requirements of 37 CFR 1.137(b) in that petitioner has supplied (1) the reply in the form of payment of the issue fee of $1,440.00 and publication fee of $300.00; (2) the petition fee of $1,540.00; and (3) a proper statement of unintentional delay.

Petitioner's deposit account has been charged two additional $300.00 publication fees and an additional $1,440.00 issue fee in error. Accordingly, the total amount of $2,040.00 will be refunded to petitioner's deposit account in due course.

The request for change of correspondence address has been accepted.

Telephone inquiries concerning this decision should be directed to the undersigned at (571) 272-7751.

This application is being referred to the Office of Data Management for processing into a patent.

Joan Olszewski

Joan Olszewski
Petitions Examiner
Office of Petitions

UNITED STATES PATENT AND TRADEMARK OFFICE

Commissioner for Patents
United States Patent and Trademark Office
P.O. Box 1450
Alexandria, VA 22313-1450
www.uspto.gov

Manuel F. De La Cerra
6885 Catamaran Drive
Carsbad, CA 92011

COPY MAILED

SEP 0 2 2008

OFFICE OF PETITIONS

In re Application of	:	
Sisinio F. Baldis et al.	:	
Application No. 11/419,453	:	DECISION ON PETITION
Filed: May 19, 2006	:	TO WITHDRAW
Attorney Docket No. SSys-001	:	FROM RECORD
	:	

This is a decision on the Request to Withdraw as attorney or agent of record under 37 C.F.R. § 1.36(b), filed August 4, 2008.

The request is **APPROVED**.

A grantable request to withdraw as attorney/agent of record must be signed by every attorney/agent seeking to withdraw or contain a clear indication that one attorney is signing on behalf of another/others. The Office requires the practitioner(s) requesting withdrawal to certify that he, she, or they have: (1) given reasonable notice to the client, prior to the expiration of the response period, that the practitioner(s) intends to withdraw from employment; (2) delivered to the client or a duly authorized representative of the client all papers and property (including funds) to which the client is entitled; and (3) notified the client of any responses that may be due and the time frame within which the client must respond, pursuant 37 CFR 10.40(c).

The request was signed by Manuel de la Cerra on behalf of all attorneys/agents of record. All attorneys/agents have been withdrawn.

Applicant is reminded that there is no attorney of record at this time.

The correspondence address of record has been changed and is indicated below.

Telephone inquiries concerning this decision should be directed to Kimberly Inabinet at 571-272-4618.

Kimberly Inabinet
Petitions Examiner
Office of Petitions

cc: Sisinio Baldis
9988 Hibert Street, Suite 202
San Diego, CA 92131

UNITED STATES PATENT AND TRADEMARK OFFICE

UNITED STATES DEPARTMENT OF COMMERCE
United States Patent and Trademark Office
Address: COMMISSIONER FOR PATENTS
P.O. Box 1450
Alexandria, Virginia 22313-1450
www.uspto.gov

APPLICATION NUMBER	FILING OR 371(C) DATE	FIRST NAMED APPLICANT	ATTY. DOCKET NO./TITLE
11/419,453	05/19/2006	Sisinio F. Baldis	SSys-001

CONFIRMATION NO. 9340

POWER OF ATTORNEY NOTICE

62912
MANUEL F. DE LA CERRA
6885 CATAMARAN DRIVE
CARLSBAD, CA 92011

OC000000031851739

Date Mailed: 09/02/2008

NOTICE REGARDING CHANGE OF POWER OF ATTORNEY

This is in response to the Power of Attorney filed 08/04/2008.

- The withdrawal as attorney in this application has been accepted. Future correspondence will be mailed to the new address of record. 37 CFR 1.33.

/kainabinet/

Office of Data Management, Application Assistance Unit (571) 272-4000, or (571) 272-4200, or 1-888-786-0101

UNITED STATES PATENT AND TRADEMARK OFFICE

UNITED STATES DEPARTMENT OF COMMERCE
United States Patent and Trademark Office
Address: COMMISSIONER FOR PATENTS
P.O. Box 1450
Alexandria, Virginia 22313-1450
www.uspto.gov

SCHWEGMAN, LUNDBERG & WOESSNER, P.A.
P.O. BOX 2938
MINNEAPOLIS, MN 55402

Mail Date: 06/01/2010

Applicant	: Muthaiah Venkatachalam	: DECISION ON REQUEST FOR
Patent Number	: 7633904	: RECALCULATION of PATENT
Issue Date	: 12/15/2009	: TERM ADJUSTMENT IN VIEW
Application No	: 11/419,455	: OF WYETH AND NOTICE OF INTENT TO
Filed	: 05/19/2006	: ISSUE CERTIFICATE OF CORRECTION
		:

The Request for Recalculation is **GRANTED** to the extent indicated.

The patent term adjustment has been determined to be **697** days. The USPTO will *sua sponte* issue a certificate of correction reflecting the amount of PTA days determined by the recalculation.

Prior to the issuance of the certificate of correction, the USPTO will afford patentee an opportunity to be heard and request reconsideration. Accordingly, patentee has **one month or thirty (30) days**, whichever is longer, to file a request for reconsideration of this patent term adjustment calculation. See 35 U.S.C. 154(b)(3)(B)(ii) and 37 CFR 1.322(a)(4). No extensions of time will be granted under 37 CFR 1.136.

Patentee should use document code PET.OP if electronically filing a request for reconsideration of this patent term adjustment calculation. The patentee must also include the information required by 37 CFR 1.705(b)(2) and the fee required by 37 CFR 1.18(e). If patentee does not file a timely request for reconsideration of this patent term adjustment calculation including the information required by 37 CFR 1.705(b)(2) and the fee required by 37 CFR 1.18(e), the USPTO will issue a certificate of correction reflecting the PTA determination noted above.

Patentee should be aware that in order to preserve the right to review in the United States District Court for the District of Columbia of the USPTO patent term adjustment determination, patentee must ensure that he or she also take the steps required under 35 U.S.C. 154(b)(4)(A) in a timely manner. Nothing in the request for recalculation should be construed as providing an alternative time frame for commencing a civil action under 35 U.S.C. 154(b)(4)(A).

Any questions concerning this decision should be directed to the Office of Patent Legal Administration at 571-272-7702.

UNITED STATES PATENT AND TRADEMARK OFFICE

Commissioner for Patents
United States Patent and Trademark Office
P.O. Box 1450
Alexandria, VA 22313-1450
www.uspto.gov

LAU & ASSOCIATES, LLC
MICHAEL N. LAU
2121 EISENHOWER AVENUE
SUITE 503A
ALEXANDRIA, VA 22314

COPY MAILED

OCT 01 2007

OFFICE OF PETITIONS

In re Application of :
Yi Li :
Application No. 11/419,498 :
Filed: May 21, 2006 :
Attorney Docket No. 070502 :

ON PETITION

This is a decision on the petition under the unintentional provisions of 37 CFR 1.137(b), filed May 30, 2007, to revive the above-identified application.

The petition is **DISMISSED**.

The application became abandoned for failure to reply in a timely manner to the Notice of Incomplete Nonprovisional Application (Notice), mailed August 24, 2006. The Notice set a period for reply of two (2) months from the mail date of the Notice. No extensions of time under the provisions of 37 CFR 1.136(a) were obtained. Accordingly, the application became abandoned on October 25, 2006.

A grantable petition under 37 CFR 1.137(b) must be accompanied by: (1) the required reply, unless previously filed; (2) the petition fee as set forth in 37 CFR 1.17(m); (3) a statement that the entire delay in filing the required reply from the due date for the reply until the filing of a grantable petition pursuant to 37 CFR 1.137(b) was unintentional; and (4) any terminal disclaimer (and fee as set forth in 37 CFR 1.20(d)) required by 37 CFR 1.137(d). Where there is a question as to whether either the abandonment or the delay in filing a petition under 37 CFR 1.137 was unintentional, the Director may require additional information. See MPEP 711.03(c)(II)(C) and (D). The instant petition lacks item(s) (1).

The drawings fail to comply with the requirement of 37 CFR 1.84(d) which states:

Drawings: One or more application drawings shall be amended in the following manner: Any changes to an application drawing must be in compliance with § 1.84 and must be submitted on a replacement sheet of drawings which shall be an attachment to the amendment document and, in the top margin, labeled "Replacement Sheet". Any replacement sheet of drawings shall include all of the figures appearing on the immediate prior version of the sheet, even if only one figure is amended. Any new sheet of drawings containing an additional figure must be labeled in the top

margin as "New Sheet". All changes to the drawings shall be explained, in detail, in either the drawing amendment or remarks section of the amendment paper.

(1) A marked-up copy of any amended drawing figure, including annotations indicating the changes made, may be included. The marked-up copy must be clearly labeled as "Annotated Sheet" and must be presented in the amendment or remarks section that explains the change to the drawings.

(2) A marked-up copy of any amended drawing figure, including annotations indicating the changes made, must be provided when required by the examiner.

Any request for reconsideration of this decision must be submitted within **TWO (2) MONTHS** from the mail date of this decision. Extensions of time under 37 CFR 1.136(a) are permitted. The reconsideration request should include a cover letter entitled "Renewed Petition under 37 CFR 1.137(b)." This is **not** a final agency action within the meaning of 5 U.S.C. § 704.

It is not apparent whether the person signing the statement of unintentional delay was in a position to have firsthand or direct knowledge of the facts and circumstances of the delay at issue. Nevertheless, such statement is being treated as having been made as the result of a reasonable inquiry into the facts and circumstances of such delay. See 37 CFR 10.18(b) and Changes to Patent Practice and Procedure; Final Rule Notice, 62 Fed. Reg. 53131, 53178 (October 10, 1997), 1203 Off. Gaz. Pat. Office 63, 103 (October 21, 1997). In the event that such an inquiry has not been made, petitioner must make such an inquiry. If such inquiry results in the discovery that it is not correct that the entire delay in filing the required reply from the due date for the reply until the filing of a grantable petition pursuant to 37 CFR 1.137(b) was unintentional, petitioner must notify the Office.

Further correspondence with respect to this matter should be addressed as follows:

By Mail: Mail Stop PETITION
Commissioner for Patents
P. O. Box 1450
Alexandria, VA 22313-1450

By hand: U. S. Patent and Trademark Office
Customer Service Window, Mail Stop Petitions
Randolph Building
401 Dulany Street
Alexandria, VA 22314

The centralized facsimile number is **(571) 273-8300.**

Telephone inquiries concerning this decision should be directed to the undersigned at (571) 272-1642.

April M. Wise
Petitions Examiner
Office of Petitions

UNITED STATES PATENT AND TRADEMARK OFFICE

Commissioner for Patents
United States Patent and Trademark Office
P.O. Box 1450
Alexandria, VA 22313-1450
www.uspto.gov

LAU & ASSOCIATES, LLC
MICHAEL N. LAU
2121 EISENHOWER AVENUE
SUITE 503A
ALEXANDRIA, VA 22314

COPY MAILED
FEB 28 2008

In re Application of	:	
Yi Li	:	
Application No. 11/419,498	:	DECISION ON PETITION
Filed: May 21, 2006	:	
Attorney Docket No. 070502	:	

This is a decision on the renewed petition under the unintentional provisions of 37 CFR 1.137(b), filed October 9, 2007, to revive the above-identified application.

The petition is **GRANTED**.

The application became abandoned for failure to reply in a timely manner to the Notice of Incomplete Nonprovisional Application (Notice), mailed August 24, 2006. The Notice set a period of reply of two (2) months from the mail date of the Notice. No extensions of time under the provisions of 37 CFR 1.136(a) were obtained. Accordingly, the application became abandoned on October 25, 2006.

The petition satisfies the requirements of 37 CFR 1.137(b) in that petitioner has supplied (1) the reply in the form of drawings, (2) the petition fee of $750, and (3) a proper statement of unintentional delay.

Telephone inquiries concerning this decision should be directed to undersigned at (571) 272-1642.

This application is being referred to the Office Patent Applications Papers for processing of the reply received October 9, 2007.

April M. Wise
Petitions Examiner
Office of Petitions

UNITED STATES PATENT AND TRADEMARK OFFICE

Commissioner for Patents
United States Patent and Trademark Office
P.O. Box 1450
Alexandria, VA 22313-1450
www.uspto.gov

BRUCE E. LILLING
LILLING & LILLING P.C.
P.O. BOX 560
GOLDEN BRIDGE NY 10526

COPY MAILED
DEC 29 2006
OFFICE OF PETITIONS

In re Application of	:	
Oz	:	ON PETITION
Application No. 11/419,518	:	
Deposited: May 22, 2006	:	
Attorney Docket No. 415/22	:	

This decision is in response to the "PETITION UNDER 37 C.F.R. 1.57(a)" filed October 16, 2006, requesting that the above-referenced application be accorded a filing date of May 22, 2006. The petition will be treated under 37 CFR 1.182.

The petition under 37 CFR 1.182 is **GRANTED**.

Application papers in the above-identified application were deposited on May 22, 2006. However, on August 22, 2006, the Initial Patent Examination Division mailed applicant a "Notice of Incomplete Nonprovisional Application," notifying applicant, *inter alia,* that the application papers had not been accorded a filing date because the application was deposited without drawings.

In response, applicant timely filed this petition. In which, applicant acknowledges inadvertently omitting all of the drawing figures in the application on filing. Pursuant to 37 C.F.R. § 1.57(a)(3) and M.P.E.P. § 601.01(f), applicant petitions to preserve the filing date of May 22, 2006 and submit with the petition a copy of the drawings as contained in U.S. Provisional Application 60/684,153, filed on May 24, 2005. Applicant states priority is claimed to this provisional application in an ADS filed on May 22, 2006.

Petitioner's arguments and evidence have been considered. It is controlling that a review of the application confirms that as filed the application contained at least one method claim.

MPEP 601.01(f), provides that:

> It has been USPTO practice to treat an application that contains at least one process or method claim as an application for which a drawing is not necessary for an understanding of the invention under 35 U.S.C. 113 (first sentence).

Thus, pursuant to § 601.01(f), a drawing is not considered essential for a filing date. Thus, the application is entitled to a filing date without drawings present in the application.

To the extent the instant petition requests a filing date of May 22, 2006 with no drawings present in the application, the petition is **granted**.

If applicant wishes to rely on § 1.57(a)(1) to enter the drawing figures, then petitioner must submit an amendment in compliance with §§ 1.57 and 1.121 within **TWO (2) MONTHS** of the mailing date of this decision. This period is not extendable. See 37 CFR 1.181(f), 37 CFR 1.57(f) and MPEP 608.01(p). The amendment will be considered by the examiner.

Given the basis for granting this petition, the petition fee is being refunded to Deposit Account No. 50-3885.

The Office of Initial Patent Examination (OIPE) has been advised of this decision. Pursuant to this decision, the application has been referred to OIPE for **correction of the filing date to May 22 2006** and **for indication in Office records, as appropriate, that "0" sheets of drawings were present on filing**.

Telephone inquiries concerning this matter may be directed to the undersigned at (571) 272-3230.

Shirene Willis Brantley

Shirene Willis Brantley
Senior Petitions Attorney
Office of Petitions

UNITED STATES PATENT AND TRADEMARK OFFICE

Commissioner for Patents
United States Patent and Trademark Office
P.O. Box 1450
Alexandria, VA 22313-1450
www.uspto.gov

BRUCE E. LILLING
PO BOX 435
JERUSALEM 91003
ISRAEL

COPY MAILED

DEC 1 8 2008

OFFICE OF PETITIONS

In re Application of	:	
Dan OZ	:	
Application No. 11/419,518	:	DECISION ON PETITION
Filed: May 22, 2006	:	TO WITHDRAW
Attorney Docket No. S1128U	:	FROM RECORD
	:	

This is a decision on the Request to Withdraw as attorney or agent of record under 37 C.F.R. § 1.36(b), filed November 3, 2008.

The request is **NOT APPROVED** as moot.

A review of the file record indicates that the power of attorney to Lilling & Lilling, PLLC, has been revoked by the assignee of the patent application on December 4, 2008. Accordingly, the request to withdraw under 37 C.F.R. § 1.36(b) is moot.

All future communications from the Office will be directed to the address below until otherwise properly notified by the applicant.

Telephone inquires concerning this decision should be directed to undersigned at 571-272- 6735.

Diane Goodwyn
Petitions Examiner
Office of Petitions

cc: STRYKER GI LTD.
8 HAESHEL ST.,
BUSINESS AND INDUSTRIAL PARK,
P.O. BOX 3534
CAESAREA 38900
ISRAEL

UNITED STATES PATENT AND TRADEMARK OFFICE

Commissioner for Patents
United States Patent and Trademark Office
P.O. Box 1450
Alexandria, VA 22313-1450
www.uspto.gov

APR 0 8 2008

B.J. Sadoff
NIXON AND VANDERHYE, P.C.
901 NORTH GLEBE ROAD, 11TH FLOOR
ARLINGTON VA 22203-1808

In re Application of	:
De Leys	:Decision on Petition
Serial No.: 11/419,528	:
Filed : 22 May 2006	:
Attorney Docket No.: BJS-2551-185	:

This letter is in response to the Renewed Petition under 37 C.F.R. 1.181 filed on 20 February 2008 requesting reconsideration of the restriction requirement.

BACKGROUND

This application was field under 35 USC 111(a) and as such, is eligible for restriction requirement practice under Chapter 800 of the MPEP.

On 21 May 2007, the examiner divided the 21 claims into two groups as follows

I. Claims 1-10 and 13-18, drawn to peptides comprising an amino acid sequence of SEQ ID NO: 455, classified in class 424, subclass 189.1.

II. Claims 1-8 and 11-18, drawn to peptides comprising an amino acid sequence SEQ ID NO: 459, classified in class 424, subclass 189.1.

Within each group the examiner required a further election of a single subsequence.

On 23 July 2007, applicants elected Group I and sequence 466 with traverse.

On 20 August 2007, the examiner considered the traversal. The examiner withdraw the election of a single subsequence, but made the requirement for restriction between Group I and II final.

On 20 February 2008, applicants filed this petition.

DISCUSSION

The file history and petition have been considered carefully.

The petition argues that the restriction requirement did not adequately demonstrate that Group I and II were independent and distinct. This is not persuasive. In the restriction requirement, the examiner stated that the claimed products have different structures and modes of operation, using FP 8.14.01. Below is the sequence listing for SEQ ID No 455 (Group I) and for SEQ ID No 459 (Group II).

```
<400> 455
Xaa Gly His Thr Arg Val Thr Gly Gly Val Gln Gly His Val Thr Cys
  1               5                  10                  15

Thr Leu Thr Ser Leu Phe Arg Pro Gly Ala Ser Gln Lys Ile Gln Leu
             20                  25                  30

Val Asn Thr Xaa
         35
```

```
<400> 459
Xaa Ala Glu Thr Ile Val Ser Gly Gly Gln Ala Ala Arg Ala Met Ser
  1               5                  10                  15

Gly Leu Val Ser Leu Phe Thr Pro Gly Ala Lys Gln Asn Ile Gln Leu
             20                  25                  30

Ile Asn Thr Xaa
         35
```

The groups are distinct from each other because the claims in each group require a sequence which is not required for the other group. Moreover, the sequences are different in terms of their primary amino acid structure as demonstrated by the partial sequence alignment of the beginning and ends of SEQ ID NOs 455 and 459. below.

455: **GLY HIS** THR **ARG** VAL **THR** GLY GLY **VAL GLN GLY HIS VAL THR**
459: **ALA GLU** THR **ILE** VAL **SER** GLY GLY **GLN ALA ALA ARG ALA MET**

...

PHE **ARG** PRO GLY ALA **SER** GLN **LYS** ILE GLN **LER VAL** ASN THR 455
PHE **THR** PRO GLY ALA **LYS** GLN **ASN** ILE GLN **LEU ILE** ASN THR 459

The petition also argues that the classification of both groups in class 424, subclass 189.1 indicates that concurrent examination would not be burdensome. This is not persuasive.

As MPEP 808.02(C) indicates, burden also includes:

> (C) A different field of search: Where it is necessary to search for one of the inventions in a manner that is not likely to result in finding art pertinent to the other invention(s) (e.g., searching different classes /subclasses or electronic resources, or employing different search queries, a different field of search is shown, even though the two are classified together. The indicated different field of search must in fact be pertinent to the type of subject matter covered by the claims. Patents need not be cited to show different fields of search.

In this application, examination of Group I would require a sequence of SEQ ID No 455 in the amino acid databases. This search is not required for the examination of Group II. Similarly, examination of Group II would require a sequence of SEQ ID No 459 in the amino acid databases, which is not required for examination of Group I. This position is supported by the copy of the examiner's search notes- in which he indicated that SEQ ID No 455 was searched.

DECISION

For these reasons, the petition filed under 37 CFR 1.181 on 20 February 2008 is **DENIED**.

The application will be forwarded to the examiner to consider the papers filed on 20 February 2008 and to prepare an Office action consistent with this petition decision.

Should there be any questions regarding this decision, please contact Special Program Examiner Julie Burke, by mail addressed to Director, Technology Center 1600, PO BOX 1450, ALEXANDRIA, VA 22313-1450, or by telephone at (571) 272-1600 or by Official Fax at 703-272-8300.

John LeGuyader
Director, Technology Center 1600

UNITED STATES PATENT AND TRADEMARK OFFICE

Commissioner for Patents
United States Patent and Trademark Office
P.O. Box 1450
Alexandria, VA 22313-1450
www.uspto.gov

FITZPATRICK CELLA HARPER & SCINTO
30 ROCKEFELLER PLAZA
NEW YORK NY 10112

MAIL

SEP 23 2008

DIRECTOR'S OFFICE
TECHNOLOGY CENTER 2600

In re Application of	:	
TAMARU, JUN	:	DECISION ON REQUEST TO
Application No. 11/419,551	:	PARTICIPATE IN PATENT
Filed: May 22, 2006	:	PROSECUTION HIGHWAY
Attorney Docket No. 01272.126074	:	PROGRAM AND PETITION
	:	TO MAKE SPECIAL UNDER
	:	37 CFR 1.102(d)

This is a decision on the request to participate in the Patent Prosecution Highway (PPH) program and the petition under 37 CFR 1.102(d), filed July 31, 2008, to make the above-identified application special.

The request and petition are **GRANTED**.

A grantable request to participate in the PPH program and petition to make special require:

(1) The U.S. application must validly claim priority under 35 U.S.C. 119(a) to one or more applications filed in the JPO;
(2) Applicant must submit a copy of the allowable/patentable claim(s) from the JPO application(s) along with an English translation thereof and a statement that the English translation is accurate;
(3) All the claims in the U.S. application must sufficiently correspond or be amended to sufficiently correspond to the allowable/patentable claim(s) in the JPO application(s);
(4) Examination of the U.S. application has not begun;
(5) Applicant must submit a copy of all the office actions from each of the JPO application(s) containing the allowable/patentable claim(s) along with an English translation thereof and a statement that the English translation is accurate;
(6) Applicant must submit an IDS listing the documents cited by the JPO examiner in the JPO office action along with copies of documents except U.S. patents or U.S. patent application publications; and
(7) The required petition fee under 37 CFR 1.17(h).

The request to participate in the PPH program and petition comply with the above requirements. Accordingly, the above-identified application has been accorded "special" status.

Telephone inquiries concerning this decision should be directed to Kenneth Wieder at 571-272-2986.

All other inquiries concerning the examination or status of the application should be directed to Patent Application Information Retrieval (PAIR) system.

The application is being forwarded to the examiner for action on the merits commensurate with this decision.

Kenneth Wieder
Quality Assurance Specialist
Technology Center 2600
Communications

UNITED STATES PATENT AND TRADEMARK OFFICE

Commissioner for Patents
United States Patent and Trademark Office
P.O. Box 1450
Alexandria, VA 22313-1450
www.uspto.gov

COPY MAILED
NOV 09 2006
OFFICE OF PETITIONS

JACQUES M. DULIN, ESQ. DBA
INNOVATION LAW GROUP, LTD.
237 NORTH SEQUIM AVENUE
SEQUIM WA 98382-3456

In re Application of	:	
John M. McNulty	:	
Application No. 11/419,573	:	DECISION ON PETITION
Filed: May 22, 2006	:	TO MAKE SPECIAL UNDER
Attorney Docket No. 7170-002US	:	37 CFR 1.102(c)(1)
	:	

This is a decision on the petition under 37 CFR 1.102(c)(1), filed May 22, 2006, to make the above-identified application special based on applicant's age as set forth in M.P.E.P. § 708.02, Section IV.

The petition is **GRANTED**.

A grantable petition to make an application special under 37 CFR 1.102(c)(1) and MPEP § 708.02, Section IV: Applicant's Age, must be accompanied by evidence showing that at least one of the applicants is 65 years of age, or more, such as a birth certificate or a statement by applicant. No fee is required.

The instant petition includes a statement from the applicant declaring that he is 65 yeas of age or older. Accordingly, the above-identified application has been accorded "special" status.

Telephone inquiries concerning this decision should be directed to Terri Williams at 571-272-2991.

All other inquiries concerning either the examination or status of the application should be directed to the Technology Center.

The application is being forwarded to the Technology Center Art Unit 3727 for action on the merits commensurate with this decision.

Terri Williams
Petitions Examiner
Office of Petitions

SPE RESPONSE FOR CERTIFICATE OF CORRECTION

Paper No.: 1

DATE : 01/22/10

TO SPE OF : ART UNIT 2618

SUBJECT : Request for Certificate of Correction for Appl. No.: 11419575 Patent No.: 7603138

Please respond to this request for a certificate of correction within 7 days.

FOR IFW FILES:

Please review the requested changes/corrections as shown in the **COCIN** document(s) in the IFW application image. No new matter should be introduced, nor should the scope or meaning of the claims be changed.

Please complete the response (see below) and forward the completed response to scanning using document code **COCX**.

FOR PAPER FILES:

Please review the requested changes/corrections as shown in the attached certificate of correction. Please complete this form (see below) and forward it with the file to:

Certificates of Correction Branch (C of C)
Randolph Square 9D40-D
Palm Location 7580

You can fax the Directors/SPE response to 571-270-9990

Lamonte Newsome
Certificates of Correction Branch
703-756-1574

Thank You For Your Assistance

The request for issuing the above-identified correction(s) is hereby:
Note your decision on the appropriate box.

- ☒ **Approved** — **All** changes apply.
- ☐ **Approved in Part** — Specify below which changes **do not** apply.
- ☐ **Denied** — State the reasons for denial below.

Comments: Examiner is OK with the requested correction on both the typo and deletion of fig.3 on sheet 3 of 3.

DUC M. NGUYEN
SUPERVISORY PATENT EXAMINER
TECHNOLOGY CENTER 2600

1/25/10

UNITED STATES PATENT AND TRADEMARK OFFICE

COMMISSIONER FOR PATENTS
UNITED STATES PATENT AND TRADEMARK OFFICE
P.O. BOX 1450
ALEXANDRIA, VA 22313-1450
www.uspto.gov

Paper No.

MALIN HALEY AND DIMAGGIO, PA
1936 S ANDREWS AVENUE
FORT LAUDERDALE FL 33316

COPY MAILED

MAY 17 2007

OFFICE OF PETITIONS

In re Application of	:	
Janiene Gilley and	:	
Antal Preiner	:	DECISION ON PETITION
Application No. 11/419,608	:	
Filed: May 22, 2006	:	
Atty Docket No. 11142.9801	:	

This is a decision on the "PETITION TO CHANGE THE NAME OF THE INVENTOR UNDER 37 C.F.R. § 1.182," filed April 9, 2007.

Petitioners state that the name of an inventor [Janean Gilley] was erroneously submitted as Janiene Gilley on filing. Further, the inventor's name has been changed to "Janiene Berry," and petitions that the change be made on the records of the PTO for the above-identified application. Petitioner submitted the petition fee for the change. The petition includes a copy of the Court Order granting the petition for name change. Applicants have also submitted a signed Application Data Sheet (ADS).

When a typographical or transliteration error in the spelling of an inventor's name is discovered during pendency of an application, a petition is not required, nor is a new oath or declaration under 37 CFR 1.63 needed. However, applicants are strongly encouraged to use an application data sheet such that any patent to issue will reflect the correct spelling of the inventor's name. Without an application data sheet with the corrected spelling, any patent to issue is less likely to reflect the correct spelling since the spelling of the inventor's name is taken from the oath or declaration, or any subsequently filed application data sheet. If the spelling of the inventor's name is incorrect, only a supplemental application data sheet is required. See MPEP § 605.04(b).

Moreover, MPEP 605.04(c) provides that:

> In cases where an inventor's name has been changed after the application has been filed and the inventor desires to change his or her name on the application, he or she must submit a petition under 37 CFR 1.182. Applicants are also strongly encouraged to submit an application data sheet (37 CFR 1.76) showing the new name. The petition should be directed to the attention of the Office of Petitions. The petition must include an appropriate petition fee and a statement signed by the inventor setting forth both names and the procedure whereby the change of name was effected, or a copy of the court order.

Applicants have advised the Office of the error in the spelling of the inventor's name. Furthermore, applicants have advised the Office that, notwithstanding the spelling error, the inventor's name has legally changed from the inventor's name on filing. The instant petition meets the requirements of MPEP 605.04(c).

Accordingly, the petition is **GRANTED**.

The inventor's name is changed in the records of the Office to Janiene Berry.

Technology Center AU 3765 has been advised of this decision. The application is thereby forwarded to the Technology Center for consideration by the examiner of the response timely filed April 9, 2007 (certificate of mailing dated April 7, 2007).

Telephone inquiries concerning this decision should be directed to the undersigned at (571) 272-3219.

Nancy Johnson
Senior Petitions Attorney
Office of Petitions

UNITED STATES PATENT AND TRADEMARK OFFICE

COMMISSIONER FOR PATENTS
UNITED STATES PATENT AND TRADEMARK OFFICE
P.O. BOX 1450
ALEXANDRIA, VA 22313-1450
www.uspto.gov

Paper No.

FITCH EVEN TABIN & FLANNERY
120 SOUTH LASALLE STREET
SUITE 1600
CHICAGO IL 60603-3406

MAILED

MAR 2 9 2010

OFFICE OF PETITIONS

In re Patent No. 7,598,923	: DECISION ON REQUEST FOR
Hardacker et al.	: RECONSIDERATION OF
Issue Date: October 6, 2009	: PATENT TERM ADJUSTMENT
Application No. 11/419,609	: and
Filed: May 22, 2006	: NOTICE OF INTENT TO ISSUE
Atty Docket No.: 86688 7114	: CERTIFICATE OF CORRECTION

This is a decision on the petition filed on December 4, 2009, which is being treated as a petition under 37 CFR 1.705(d) requesting that the patent term adjustment indicated on the above-identified patent be corrected to indicate that the term of the above-identified patent is extended or adjusted by six hundred and fifty-four (654) days.

The petition to correct the patent term adjustment indicated on the above-identified patent to indicate that the term of the above-identified patent is extended or adjusted by six hundred and fifty-four (654) days is **GRANTED**.

The Office acknowledges submission of the $200.00 fee set forth in 37 CFR 1.18(e). No additional fees are required.

The application is being forwarded to the Certificates of Branch for issuance of a certificate of correction. The Office will issue a certificate of correction indicating that the term of the above-identified patent is extended or adjusted by **six hundred and fifty-four (654) days.**

Telephone inquiries specific to this matter should be directed to Senior Attorney Paul Shanoski at (571) 272-3225.

Nancy Johnson

Nancy Johnson
Senior Petitions Attorney
Office of Petitions

Enclosure: Copy of DRAFT Certificate of Correction

UNITED STATES PATENT AND TRADEMARK OFFICE

CERTIFICATE OF CORRECTION

PATENT : 7,598,923 B2

DATED : **October 6, 2009** **DRAFT**

INVENTOR(S) : **Hardacker et al.**

It is certified that error appears in the above-identified patent and that said Letters Patent is hereby corrected as shown below:

On the cover page,

[*] Notice: Subject to any disclaimer, the term of this patent is extended or adjusted under 35 USC 154(b) by 517 days

Delete the phrase "by 517 days" and insert – by 654 days --

UNITED STATES PATENT AND TRADEMARK OFFICE

Commissioner for Patents
United States Patent and Trademark Office
P.O. Box 1450
Alexandria, VA 22313-1450
www.uspto.gov

AKERMAN SENTERFITT
P.O. BOX 3188
WEST PALM BEACH, FL 33402-3188

COPY MAILED

JUN 0 6 2008

In re Application of	:	
Donald Giles Koch, et al.	:	
Application No. 11/419,620	:	DECISION ON PETITION
Filed: May 22, 2006	:	TO WITHDRAW
Attorney Docket No. 7302-39	:	FROM RECORD
	:	

This is a decision on the Request to Withdraw as attorney or agent of record under 37 C.F.R. § 1.36(b), filed November 14, 2007.

The request is **DISMISSED** as moot.

A review of the file record indicates that the power of attorney to Akerman Senterfitt has been revoked by the assignee of the patent application on March 3, 2008. Accordingly, the request to withdraw under 37 C.F.R. § 1.36(b) is moot.

All future communications from the Office will continue to be directed to the below-listed address until otherwise notified by applicant.

Telephone inquires concerning this decision should be directed to undersigned at 571-272- 1642.

April M. Wise
Petitions Examiner
Office of Petitions

cc: FOGG & POWERS, LLC
10 SOUTH FIFTH STREET
SUITE 1000
MINNEAPOLIS, MN 55402

UNITED STATES PATENT AND TRADEMARK OFFICE

Commissioner for Patents
United States Patent and Trademark Office
P.O. Box 1450
Alexandria, VA 22313-1450
www.uspto.gov

DEMONT & BREYER, LLC
100 COMMONS WAY
HOLMDEL NJ 07733

COPY MAILED

OCT 23 2006

OFFICE OF PETITIONS

In re Application of	:	
SPAIN, et al.	:	
Application No. 11/419,645	:	DECISION ON PETITION
Filed: May 22, 2006	:	TO MAKE SPECIAL UNDER
Attorney Docket No. 465-038US	:	37 CFR 1.102(c)(1)
	:	

This is a decision on the petition under 37 CFR 1.102(c)(1), filed August 31, 2006, to make the above-identified application special based on applicant's age as set forth in M.P.E.P. § 708.02, Section IV.

The petition is **GRANTED**.

A grantable petition to make an application special under 37 CFR 1.102(c)(1) and MPEP § 708.02, Section IV: Applicant's Age, must be accompanied by evidence showing that at least one of the applicants is 65 years of age, or more, such as a birth certificate or a statement by applicant. No fee is required.

The instant petition includes the passport of Robert Morris Dressler attesting to his age. Accordingly, the above-identified application has been accorded "special" status.

Telephone inquiries concerning this decision should be directed to Monica A. Graves at 571-272-7253.

All other inquiries concerning either the examination or status of the application should be directed to the Technology Center.

The application is being forwarded to the Technology Center Art Unit 2876 for action on the merits commensurate with this decision.

David Bucci
Petitions Examiner
Office of Petitions

UNITED STATES PATENT AND TRADEMARK OFFICE

Commissioner for Patents
United States Patent and Trademark Office
P.O. Box 1450
Alexandria, VA 22313-1450
www.uspto.gov

DEMONT & BREYER, LLC
100 COMMONS WAY
HOLMDEL NJ 07733

COPY MAILED

MAR 09 2007

OFFICE OF PETITIONS

In re Application of	:	
David Stevenson Spain Jr. et al.	:	
Application No. 11/419,649	:	DECISION ON PETITION
Filed: May 22, 2006	:	TO MAKE SPECIAL UNDER
Attorney Docket No. **465-039US**	:	37 CFR 1.102(c)(1)
	:	

This is a decision on the petition under 37 CFR 1.102(c)(1), filed August 31, 2006, to make the above-identified application special based on applicant's age as set forth in M.P.E.P. § 708.02, Section IV.

The petition is **GRANTED**.

A grantable petition to make an application special under 37 CFR 1.102(c)(1) and MPEP § 708.02, Section IV: Applicant's Age must be accompanied by evidence showing that at least one of the applicants is 65 years of age, or more, such as a birth certificate or a statement by applicant. No fee is required

The instant petition includes a copy of Robert Morris Dressler's passport, attesting to his age. Accordingly, the above-identified application has been accorded "special" status.

Telephone inquiries concerning this decision should be directed to Tredelle Jackson at 571-272-2783.

All other inquiries concerning either the examination or status of the application should be directed to the Technology Center.

The application is being forwarded to the Technology Center Art Unit 2876 for action on the merits commensurate with this decision.

Monica A. Graves
Petitions Examiner
Office of Petitions

UNITED STATES PATENT AND TRADEMARK OFFICE

Commissioner for Patents
United States Patent and Trademark Office
P.O. Box 1450
Alexandria, VA 22313-1450
www.uspto.gov

STETINA BRUNDA GARRED & BRUCKER
75 ENTERPRISE, SUITE 250
ALISO VIEJO, CA 92656

COPY MAILED

MAR 25 2009

OFFICE OF PETITIONS

In re Application of	:	
Flavio Tondolo	:	
Application No. 11/419,673	:	ON PETITION
Filed: May 22, 2006	:	
Attorney Docket No. CCIO-073A	:	

This is a decision on the petition under 37 CFR 1.137(b), filed March 12, 2009, to revive the above-identified application.

The application became abandoned for failure to file a timely reply to the Notice of Allowability mailed on November 10, 2008. A Notice of Abandonment was mailed on March 5, 2009.

The petition satisfies the requirements of 37 CFR 1.137(b) in that petitioner has supplied (1) the reply in the form of $1,510 for payment of the issue fee, $300 for payment of the publication fee and one sheet of drawing containing Figure 3; (2) the petition fee of $1,620; and (3) a proper statement of unintentional delay. Therefore, the petition is **GRANTED**.

This application file is being referred to the Office of Data Management for further processing into a patent.

Telephone inquiries concerning this decision should be directed to the undersigned at (571) 272-3226.

Andrea Smith
Petitions Examiner
Office of Petitions

UNITED STATES PATENT AND TRADEMARK OFFICE

Commissioner for Patents
United States Patent and Trademark Office
P.O. Box 1450
Alexandria, VA 22313-1450
www.uspto.gov

Paper No.

FITCH EVEN TABIN & FLANNERY
120 SOUTH LASALLE STREET
SUITE 1600
CHICAGO IL 60603-3406

COPY MAILED

JUN 29 2009

OFFICE OF PETITIONS

In re Application of	:	
Feith et al.	:	
Application No. 11/419,693	:	ON APPLICATION FOR
Filed: May 22, 2006	:	PATENT TERM ADJUSTMENT
Atty Docket No. 8473/84645	:	

This is in response to the APPLICATION FOR PATENT TERM ADJUSTMENT UNDER 37 C.F.R. § 1.705(b) filed March 3, 2009. Applicants submit that the patent term adjustment be increased from three hundred twenty-six (326) days to three hundred fifty-eight (358) days as calculated by the Office. Applicants request this correction on the basis that the Office will take in excess of three years to issue this patent[1].

As the instant application for patent term adjustment requests reconsideration of the patent term adjustment as it relates to the Office's failure to issue the patent within 3 years of the filing date, a decision is being **held in abeyance** until after the actual patent date. Knowledge of the actual date the patent issues is required to calculate the amount, if any, of additional patent term patentee is entitled to for Office failure to issue the patent within 3 years. See § 1.703(b). (This is true even where a request for continued examination (RCE) was filed. The computer will not undertake the § 1.703(b) calculation until the actual date of issuance of the patent has been determined).

Applicant is given TWO (2) MONTHS from the issue date of the patent to file a written request for reconsideration of the patent term adjustment for Office failure to issue the patent

[1] Applicants assert this calculation assuming the patent will issue on June 23, 2009.

within 3 years. A copy of this decision should accompany the request. Applicant may seek such consideration without payment of an additional fee. However, as to all other bases for seeking reconsideration of the patent term adjustment indicated in the patent, all requirements of § 1.705(d) must be met. Requests for reconsideration on other bases must be timely filed and must include payment of the required fee.

Rather than file the request for reconsideration of Patent Term Adjustment at the time of the mailing of the notice of allowance, applicant is advised that they may wait until the time of the issuance of the patent and file a request for reconsideration of the patent term pursuant to 37 CFR 1.705(d). The USPTO notes that it does not calculate the amount of time earned pursuant to 37 CFR 1.702(b) until the time of the issuance of the patent and accordingly, the Office will consider any request for reconsideration of the patent term adjustment due to an error in the calculation of 37 CFR 1.702(b) to be timely if the request for reconsideration is filed within two months of the issuance of the patent.

The Office acknowledges submission of the $200.00 fee set forth in 37 CFR 1.18(e). No additional fees are required.

Applicants are reminded that any delays by the Office pursuant to 37 CFR 1.702(a)(4) and 1.702(b) and any applicant delays under 37 CFR 1.704(c)(10) will be calculated at the time of the issuance of the patent and applicants will be notified of the revised patent term adjustment to be indicated on the patent in the Issue Notification letter that is mailed to applicants approximately three weeks prior to issuance.

The Office of Data Management has been advised of this decision. This matter is being referred to the Office of Data Management for issuance of the patent.

Telephone inquiries specific to this decision should be directed to the undersigned at (571) 272-3219.

Nancy Johnson

Nancy Johnson
Senior Petitions Attorney
Office of Petitions

UNITED STATES PATENT AND TRADEMARK OFFICE

UNITED STATES DEPARTMENT OF COMMERCE
United States Patent and Trademark Office
Address: COMMISSIONER FOR PATENTS
P.O. Box 1450
Alexandria, Virginia 22313-1450
www.uspto.gov

FITCH EVEN TABIN & FLANNERY
120 SOUTH LASALLE STREET
SUITE 1600
CHICAGO, IL 60603-3406

Mail Date: 04/21/2010

Applicant	: Raymond P. Feith	: DECISION ON REQUEST FOR
Patent Number	: 7581687	: RECALCULATION of PATENT
Issue Date	: 09/01/2009	: TERM ADJUSTMENT IN VIEW
Appliction No	: 11/419,693	: OF WYETH AND NOTICE OF INTENT TO
Filed	: 05/22/2006	: ISSUE CERTIFICATE OF CORRECTION
		:

The Request for Recalculation is **GRANTED** to the extent indicated.

The patent term adjustment has been determined to be **428** days. The USPTO will *sua sponte* issue a certificate of correction reflecting the amount of PTA days determined by the recalculation.

Prior to the issuance of the certificate of correction, the USPTO will afford patentee an opportunity to be heard and request reconsideration. Accordingly, patentee has **one month or thirty (30) days**, whichever is longer, to file a request for reconsideration of this patent term adjustment calculation. See 35 U.S.C. 154(b)(3)(B)(ii) and 37 CFR 1.322(a)(4). No extensions of time will be granted under 37 CFR 1.136.

Patentee should use document code PET.OP if electronically filing a request for reconsideration of this patent term adjustment calculation. The patentee must also include the information required by 37 CFR 1.705(b)(2) and the fee required by 37 CFR 1.18(e). If patentee does not file a timely request for reconsideration of this patent term adjustment calculation including the information required by 37 CFR 1.705(b)(2) and the fee required by 37 CFR 1.18(e), the USPTO will issue a certificate of correction reflecting the PTA determination noted above.

Patentee should be aware that in order to preserve the right to review in the United States District Court for the District of Columbia of the USPTO patent term adjustment determination, patentee must ensure that he or she also take the steps required under 35 U.S.C. 154(b)(4)(A) in a timely manner. Nothing in the request for recalculation should be construed as providing an alternative time frame for commencing a civil action under 35 U.S.C. 154(b)(4)(A).

Any questions concerning this decision should be directed to the Office of Patent Legal Administration at 571-272-7702.

UNITED STATES PATENT AND TRADEMARK OFFICE

Commissioner for Patents
United States Patent and Trademark Office
P.O. Box 1450
Alexandria, VA 22313-1450
www.uspto.gov

LAW OFFICES OF MIKIO ISHIMARU
333 W. EL CAMINO REAL
SUITE 330
SUNNYVALE CA 94087

MAILED

MAY 07 2010

OFFICE OF PETITIONS

In re Application of	:	
Masao Taguchi	:	
Application No. 11/419705	:	
Filing or 371(c) Date: 05/22/2006	:	ON PETITION
Attorney Docket Number:	:	
AF02071	:	

This is a decision on the petition under 37 CFR 1.137(b), filed January 22, 2010, to revive the above-identified application. The delay in treating this petition is regretted.

This Petition is hereby **dismissed**.

Any further petition to revive the above-identified application must be submitted within TWO (2) MONTHS from the mail date of this decision. Extensions of time under 37 CFR 1.136(a) are permitted. The reconsideration request should include a cover letter entitled "Request for Reconsideration of Petition under [insert the applicable code section]". This is **not** final agency action within the meaning of 5 U.S.C. § 704.

Background

The above-identified application became abandoned for failure to timely and properly reply to the final Office action, mailed January 13, 2009. The Office action set a three (3) month period for reply from the mail date of the Office action. Extensions of time were available under 37 CFR 1.136(a). No complete and proper reply having been received, the application became abandoned on April 14, 2009. A Notice of Abandonment was mailed September 28, 2009.

The instant petition

Applicant files the instant petition and Amendment.

The Examiner has reviewed the Amendment and concluded that the Amendment fails to place the application in condition for allowance.

Further correspondence with respect to this matter should be addressed as follows:

By mail: Director for Patents
PO Box 1450
Alexandria, VA 22313-1450

By FAX: (571) 273-8300
Attn: Office of Petitions

By hand: Customer Service Window
Randolph Building
401 Dulany Street
Alexandria, VA 22314

Inquiries regarding the Amendment should be directed to the Examiner. Telephone inquiries concerning this petition Decision should be directed to the undersigned at (571) 272-3232.

/Derek L. Woods/

Derek L. Woods
Attorney
Office of Petitions

UNITED STATES PATENT AND TRADEMARK OFFICE

UNITED STATES DEPARTMENT OF COMMERCE
United States Patent and Trademark Office
Address: COMMISSIONER FOR PATENTS
P.O. Box 1450
Alexandria, Virginia 22313-1450
www.uspto.gov

Workman Nydegger
1000 Eagle Gate Tower
60 East South Temple
Salt Lake City, UT 84111

Mail Date: 04/21/2010

Applicant	: Donald A. Blackwell	: DECISION ON REQUEST FOR
Patent Number	: 7625250	: RECALCULATION of PATENT
Issue Date	: 12/01/2009	: TERM ADJUSTMENT IN VIEW
Appliction No	: 11/419,709	: OF WYETH AND NOTICE OF INTENT TO
Filed	: 05/22/2006	: ISSUE CERTIFICATE OF CORRECTION
		:

The Request for Recalculation is **GRANTED** to the extent indicated.

The patent term adjustment has been determined to be **0** days. The USPTO will *sua sponte* issue a certificate of correction reflecting the amount of PTA days determined by the recalculation.

Prior to the issuance of the certificate of correction, the USPTO will afford patentee an opportunity to be heard and request reconsideration. Accordingly, patentee has **one month or thirty (30) days**, whichever is longer, to file a request for reconsideration of this patent term adjustment calculation. See 35 U.S.C. 154(b)(3)(B)(ii) and 37 CFR 1.322(a)(4). No extensions of time will be granted under 37 CFR 1.136.

Patentee should use document code PET.OP if electronically filing a request for reconsideration of this patent term adjustment calculation. The patentee must also include the information required by 37 CFR 1.705(b)(2) and the fee required by 37 CFR 1.18(e). If patentee does not file a timely request for reconsideration of this patent term adjustment calculation including the information required by 37 CFR 1.705(b)(2) and the fee required by 37 CFR 1.18(e), the USPTO will issue a certificate of correction reflecting the PTA determination noted above.

Patentee should be aware that in order to preserve the right to review in the United States District Court for the District of Columbia of the USPTO patent term adjustment determination, patentee must ensure that he or she also take the steps required under 35 U.S.C. 154(b)(4)(A) in a timely manner. Nothing in the request for recalculation should be construed as providing an alternative time frame for commencing a civil action under 35 U.S.C. 154(b)(4)(A).

Any questions concerning this decision should be directed to the Office of Patent Legal Administration at 571-272-7702.

UNITED STATES PATENT AND TRADEMARK OFFICE

Commissioner for Patents
United States Patent and Trademark Office
P.O. Box 1450
Alexandria, VA 22313-1450
www.uspto.gov

LOWE, HAUPTMAN, GILMAN & BERNER, LLP (ITW)
1700 DIAGONAL ROAD
SUITE 300
ALEXANDRIA, VA 22314

COPY MAILED

JAN 1 0 2007

OFFICE OF PETITIONS

In re Application of Kranjc :
Application No.11/419,712 : Decision on Petition
Filing Date: May 22, 2006 :
Attorney Docket No. 713-1390 :

This is a decision in response to the petition filed October 18, 2006, which is being treated as a petition under 37 CFR 1.182 requesting the application be accorded a filing date of May 22, 2006.

The petition is **granted**.

The application was filed May 22, 2006. The first sentence of the specification incorporates by reference the contents of Slovenian Patent Application Number P-200500152.

A certified copy of the Slovenian Patent was filed May 23, 2006. The certified copy was accompanied by an English translation of the document.

The Office of Initial Patent Examination mailed a "Notice of Incomplete Application" on August 23, 2006. The Notice stated drawings did not appear to be part of the application as filed and that a filing date would be accorded upon the submission of drawings.

The instant petition is accompanied by a copy of a drawing figure from the Slovenian Patent and a request the drawing figure be entered as part of the application.

The Office allows an applicant to rely upon an incorporation by reference of a parent application when a portion of the child application has been inadvertently omitted.

Therefore, on petition, the application may be accorded the requested filing date of May 22, 2006.

The copy of the drawing sheet submitted with the petition will be used for examination purposes.

During review of the petition, the Office of Petitions recognized two factors which may cause complications in the future. *As a courtesy*, the Office of Petitions will identify the factors for petitioner.

First, the single drawing figure is labeled "Fig. 1". 37 CFR 1.84(u)(1) states in part,

> Where only a single view is used in an application to illustrate the claimed invention, it must not be numbered and the abbreviation "FIG." must not appear.

Petitioner may wish to file an amendment including a corrected drawing sheet.

Second, the ADS and declarations conflict regarding the name of the city where the inventor resides and receives mail. The declaration lists the city as Tolmin. The ADS lists the city as Tournon. Petitioner may wish to file a supplemental ADS with the correct city listed.

The Office of Initial Patent Examination will be informed of the instant decision will process the application with a filing date of May 22, 2006, using the papers filed on May 22, 2006, and the drawing sheet filed October 18, 2006.

Telephone inquiries regarding this communication should be directed to Petitions Attorney Steven Brantley at (571) 272-3203.

Charles Steven Brantley
Senior Petitions Attorney
Office of Petition

IN THE UNITED STATES PATENT AND TRADEMARK OFFICE

Application No.	:	to be assigned	Confirmation No. to be assigned
Applicant	:	Daniel E. Reiner et al.	
Filed	:	Herewith	
Title	:	Casino Style Wagering Game	
TC/A.U.	:	3711	
Examiner	:	Dolores R. Collins	
Docket No.	:	88721.000004	
Customer No.	:	29747	

Commissioner for Patents
PO Box 1450
Alexandria, Virginia 22313-1450

PETITION TO MAKE SPECIAL UNDER 37 CFR § 1.102(c)

Commissioner:

Applicant hereby petitions to make special the above-referenced application on the grounds of applicant's age which is over 65 years of age. Enclosed is a copy of the Decision on Petition to Make Special dated July 27, 2005 granting the petition in Application No. 10/835,339.

Respectfully submitted,

By: _____
Rob L. Phillips
Registration No. 40,305

Date: May 22, 2006

Greenberg Traurig
3773 Howard Hughes Pkwy.
Suite 500 North
Las Vegas, Nevada 89109

Telephone : 702-792-3773
Facsimile : 702 792-9002

The Commissioner is hereby authorized to charge any deficiency or credit any overpayment of fees which may be required by this paper to Deposit Account No. 502466 including any fee for extension of time, or the fee for additional claims which may be required. Please show our docket number with any Deposit Account transaction. ***A copy of this letter is enclosed.***

G:\APATENT\REINER\000004 DIV\PTO PETITIONTOMAKESPECIAL DOC

UNITED STATES PATENT AND TRADEMARK OFFICE

COMMISSIONER FOR PATENTS
UNITED STATES PATENT AND TRADEMARK OFFICE
P.O. BOX 1450
ALEXANDRIA, VA 22313-1450
www.uspto.gov

JUL 27 2005

In re Application of	:	
Daniel E. Reiner et al.	:	
Serial No. 10/835,339	:	DECISION ON PETITION
Filed: April 29, 2004	:	TO MAKE SPECIAL
For: CASINO STYLE WAGERING GAME	:	

Applicant's petition, filed May 2, 2005, requests that this application be rendered special for examination in that applicant is over sixty-five (65) years of age.

The petition has been reviewed and is found to be in compliance with the requirements for special status as set forth in Section 708.02(IV) of the Manual of Patent Examining Procedure (MPEP).

PETITION GRANTED.

Richard A. Bertsch, Director
Technology Center 3700

Rob L. Phillips
Quirk & Tratos
3773 Howard Hughes Pkwy., Suite 500 North
Las Vegas, NV 89109

Greenberg
Traurig, LLP
Attorney(s): RLP
Docketed By: 8-2-05
Verified By:

File: 7115.00002
Action Item: status
Due Date: 1-27-06
Critical Date: 1-27-06

UNITED STATES PATENT AND TRADEMARK OFFICE

Commissioner for Patents
United States Patent and Trademark Office
P.O. Box 1450
Alexandria, VA 22313-1450
www.uspto.gov

GREENBERG TRAURIG
3773 HOWARD HUGHES PARKWAY
SUITE 500 NORTH
LAS VEGAS NV 89109

COPY MAILED
OCT 23 2006
OFFICE OF PETITIONS

In re Application of	:	
REINER, et al.	:	
Application No. 11/419,721	:	DECISION ON PETITION
Filed: May 22, 2006	:	TO MAKE SPECIAL UNDER
Attorney Docket No. 88721.000004	:	37 CFR 1.102(c)(1)
	:	

This is a decision on the petition under 37 CFR 1.102(c)(1), filed May 22, 2006, to make the above-identified application special based on applicant's age as set forth in M.P.E.P. § 708.02, Section IV.

The petition is **GRANTED**.

A grantable petition to make an application special under 37 CFR 1.102(c)(1) and MPEP § 708.02, Section IV: Applicant's Age, must be accompanied by evidence showing that at least one of the applicants is 65 years of age, or more, such as a birth certificate or a statement by applicant. No fee is required.

The instant petition includes affidavit from Daniel E. Reiner. Accordingly, the above-identified application has been accorded "special" status.

Telephone inquiries concerning this decision should be directed to Monica A. Graves at 571-272-7253.

All other inquiries concerning either the examination or status of the application should be directed to the Technology Center.

The application is being forwarded to the Technology Center Art Unit 3713 for action on the merits commensurate with this decision.

Daivd Bucci
Petitions Examiner
Office of Petitions

UNITED STATES PATENT AND TRADEMARK OFFICE

Commissioner for Patents
United States Patent and Trademark Office
P.O. Box 1450
Alexandria, VA 22313-1450
www.uspto.gov

BAKER BOTTS LLP
2001 ROSS AVENUE
SUITE 600
DALLAS TX 75201-2980

COPY MAILED

FEB 09 2007

OFFICE OF PETITIONS

In re Application of	:	
Horng-Wei Her, Junne Ma,	:	
Chiu Man Lam, David Dwyer,	:	
Kaihu Chen	:	
Application No. 11/419,728	:	
Filing Date: May 22, 2006	:	DECISION REFUSING
Attorney Docket No. 063170.8567	:	STATUS UNDER § 1.47(a)

This is in response to the petition under 37 CFR 1.47(a), filed December 29, 2006.

The petition under 37 CFR 1.47(a) is **DISMISSED**.

Rule 47 applicant is given TWO MONTHS from the mailing date of this decision to reply, correcting the below-noted deficiencies. Any reply should be entitled "Request for Reconsideration of Petition Under 37 CFR 1.47(a)," and should only address the deficiencies noted below, except that the reply may include an oath or declaration executed by the non-signing inventors. **Failure to respond will result in abandonment of the application.** Any extensions of time will be governed by 37 CFR 1.136(a).

A grantable petition under 37 CFR 1.47(a) requires: (1) proof that the non-signing inventor(s) cannot be reached or refuses to sign the oath or declaration after having been presented with the application papers (specification, claims and drawings); (2) an acceptable oath or declaration in compliance with 37 CFR 1.63; (3) the petition fee; and (4) a statement of the last known address of the non-signing inventor(s). The instant petition does not satisfy requirement (2).

As to requirement (2), petitioner has failed to submit an oath or declaration in compliance with 37 CFR 1.63. The declaration does not contain the citizenship of inventors Lam and Chen.

Further correspondence with respect to this matter should be addressed as follows:

By mail: Mail Stop Petitions
Commissioner for Patents
P.O. Box 1450
Alexandria VA 22313-1450

By FAX: (703) 872-9306
Attn: Office of Petitions

Telephone inquiries concerning this decision may be directed to the undersigned at (571)272-3207.

Cliff Congo
Petitions Attorney
Office of Petitions

UNITED STATES PATENT AND TRADEMARK OFFICE

Commissioner for Patents
United States Patent and Trademark Office
P.O. Box 1450
Alexandria, VA 22313-1450
www.uspto.gov

BAKER BOTTS LLP
2001 ROSS AVENUE
SUITE 600
DALLAS TX 75201-2980

COPY MAILED

MAY 09 2007

OFFICE OF PETITIONS

In re Application of Horng-Wei Her, Junne Ma, Chiu Man Lam, David Dwyer, Kaihu Chen Application No. 11/419,728 Filing Date: May 22, 2006 Attorney Docket No. 063170.8567	: : : : : : :	DECISION ACCORDING STATUS UNDER § 1.47(a)

This is in response to the renewed petition under 37 CFR 1.47(a), filed March 13, 2007.

The petition under 37 CFR 1.47(a) is **GRANTED**.

The above-identified application was filed on May 22, 2006, without, *inter alia,* an executed oath or declaration. Accordingly, the Office mailed a Notice to File Missing Parts of Nonprovisional Application on August 2, 2006. This Notice set an extendable period for reply of two months. On December 29, 2006, applicants filed a petition under 37 CFR 1.47(a), made timely by obtaining a three month extension of time. However, the petition was dismissed in a decision mailed on February 9, 2007. The decision explained that the 37 CFR 1.63 declaration submitted with the petition was not proper because it did not contain the citizenship of inventors Lam and Chen.

With the instant petition, petitioner has submitted a declaration in compliance with 37 CFR 1.63. The other requirements for a grantable petition were previously satisfied with the petition filed December 29, 2006.

Accordingly, the above-identified application is hereby accorded Rule 1.47(a) status.

Pursuant to 37 CFR 1.47(c), this Office will forward notice of this application's filing to the non-signing inventors at the last known addresses given in the petition. Notice of the filing of this application will also be published in the Official Gazette.

The matter is being forwarded to the Office of Initial Patent Examination for pre-examination processing.

Telephone inquiries concerning this decision may be directed to the undersigned at (571)272-3207.

Cliff Congo
Petitions Attorney
Office of Petitions

UNITED STATES PATENT AND TRADEMARK OFFICE

Commissioner for Patents
United States Patent and Trademark Office
P.O. Box 1450
Alexandria, VA 22313-1450
www.uspto.gov

CHIU MAN LAM
53 BRIARWOOD LN
PLAINVIEW NY 11803-6328

COPY MAILED

MAY 09 2007

OFFICE OF PETITIONS

In re Application of :
Horng-Wei Her, Junne Ma, :
Chiu Man Lam, David Dwyer, :
Kaihu Chen :
Application No. 11/419,728 : LETTER
Filed: May 22, 2006
Title: System and Method for
Monitoring Service Provider
Achievements

Dear Chiu Man Lam:

You are named as a joint inventor in the above-identified United States patent application filed under the provisions of 35 USC 116 (United States Code) and 37 CFR 1.47(a), Rules of Practice in Patent Cases. Should a patent be granted on the application you will be designated therein as a joint inventor.

As a named inventor you are entitled to inspect any paper in the file wrapper of the application, order copies of all or any part thereof (at a prepaid cost per 37 CFR 1.19) or make your position of record in the application. Alternatively, you may arrange to do any of the preceding through a registered patent attorney or agent presenting written authorization from you. If you care to join the application, agent of record would presumably assist you. Joining in the application would entail the filing of an appropriate oath or declaration by you pursuant to 37 CFR 1.63.

Telephone inquiries regarding this communication should be directed to Petitions Attorney Cliff Congo at (571)272-3207. Requests for information regarding your application should be directed to the File Information Unit at (703) 308-2733. Information regarding how to pay for and order a copy of the application, or a specific paper in the application, should be directed to the Certification Division at (703) 308-9726 or 1-800-972-6382 (outside the Washington D.C. area).

Cliff Congo
Petitions Attorney
Office of Petitions

UNITED STATES PATENT AND TRADEMARK OFFICE

Commissioner for Patents
United States Patent and Trademark Office
P.O. Box 1450
Alexandria, VA 22313-1450
www.uspto.gov

KAIHU CHEN
16 WISTORIA LN
LAKE GROVE NY 11755-1843

COPY MAILED

MAY 09 2007

OFFICE OF PETITIONS

In re Application of :
Horng-Wei Her, Junne Ma, :
Chiu Man Lam, David Dwyer, :
Kaihu Chen :
Application No. 11/419,728 : LETTER
Filed: May 22, 2006
Title: System and Method for
Monitoring Service Provider
Achievements

Dear Kaihu Chen:

You are named as a joint inventor in the above-identified United States patent application filed under the provisions of 35 USC 116 (United States Code) and 37 CFR 1.47(a), Rules of Practice in Patent Cases. Should a patent be granted on the application you will be designated therein as a joint inventor.

As a named inventor you are entitled to inspect any paper in the file wrapper of the application, order copies of all or any part thereof (at a prepaid cost per 37 CFR 1.19) or make your position of record in the application. Alternatively, you may arrange to do any of the preceding through a registered patent attorney or agent presenting written authorization from you. If you care to join the application, agent of record would presumably assist you. Joining in the application would entail the filing of an appropriate oath or declaration by you pursuant to 37 CFR 1.63.

Telephone inquiries regarding this communication should be directed to Petitions Attorney Cliff Congo at (571)272-3207. Requests for information regarding your application should be directed to the File Information Unit at (703) 308-2733. Information regarding how to pay for and order a copy of the application, or a specific paper in the application, should be directed to the Certification Division at (703) 308-9726 or 1-800-972-6382 (outside the Washington D.C. area).

Cliff Congo

Cliff Congo
Petitions Attorney
Office of Petitions

UNITED STATES PATENT AND TRADEMARK OFFICE

Commissioner for Patents
United States Patent and Trademark Office
P.O. Box 1450
Alexandria, VA 22313-1450
www.uspto.gov

DAVID C DWYER
PO BOX 524
PLAINVIEW NY 11803

COPY MAILED

MAY 09 2007

OFFICE OF PETITIONS

In re Application of :
Horng-Wei Her, Junne Ma, :
Chiu Man Lam, David Dwyer, :
Kaihu Chen :
Application No. 11/419,728 : LETTER
Filed: May 22, 2006
Title: System and Method for
Monitoring Service Provider
Achievements

Dear Mr. Dwyer:

You are named as a joint inventor in the above-identified United States patent application filed under the provisions of 35 USC 116 (United States Code) and 37 CFR 1.47(a), Rules of Practice in Patent Cases. Should a patent be granted on the application you will be designated therein as a joint inventor.

As a named inventor you are entitled to inspect any paper in the file wrapper of the application, order copies of all or any part thereof (at a prepaid cost per 37 CFR 1.19) or make your position of record in the application. Alternatively, you may arrange to do any of the preceding through a registered patent attorney or agent presenting written authorization from you. If you care to join the application, agent of record would presumably assist you. Joining in the application would entail the filing of an appropriate oath or declaration by you pursuant to 37 CFR 1.63.

Telephone inquiries regarding this communication should be directed to Petitions Attorney Cliff Congo at (571)272-3207. Requests for information regarding your application should be directed to the File Information Unit at (703) 308-2733. Information regarding how to pay for and order a copy of the application, or a specific paper in the application, should be directed to the Certification Division at (703) 308-9726 or 1-800-972-6382 (outside the Washington D.C. area).

Cliff Congo

Cliff Congo
Petitions Attorney
Office of Petitions

UNITED STATES PATENT AND TRADEMARK OFFICE

Commissioner for Patents
United States Patent and Trademark Office
P.O. Box 1450
Alexandria, VA 22313-1450
www.uspto.gov

BOOTH UDALL, PLC
1423 S. HIGLEY ROAD
SUITE 110
MESA AZ 85206

COPY MAILED

AUG 29 2006

OFFICE OF PETITIONS

In re Application of	:	
LeRoy Henry Terry	:	
Application No. 11/419,732	:	DECISION ON PETITION
Filed: May 22, 2006	:	TO MAKE SPECIAL UNDER
Attorney Docket No. 1009.006	:	37 CFR 1.102(c)(1)
	:	

This is a decision on the petition under 37 CFR 1.102(c)(1), filed May 22, 2006, to make the above-identified application special based on applicant's age as set forth in M.P.E.P. § 708.02, Section IV.

The petition is **GRANTED**.

A grantable petition to make an application special under 37 CFR 1.102(c)(1) and MPEP § 708.02, Section IV: Applicant's Age, must be accompanied by evidence showing that at least one of the applicants is 65 years of age, or more, such as a birth certificate or a statement by applicant. No fee is required.

The instant petition includes a signed copy of the statement/Declaration. Accordingly, the above-identified application has been accorded "special" status.

Telephone inquiries concerning this decision should be directed to Charles Smoot at 571-272-3299.

All other inquiries concerning either the examination or status of the application should be directed to the Technology Center.

The application is being forwarded to the Technology Center Art Unit 1724 for action on the merits commensurate with this decision.

Francis Ickes for
David Bucci
Petitions Examiner
Office of Petitions

UNITED STATES PATENT AND TRADEMARK OFFICE

Commissioner for Patents
United States Patent and Trademark Office
P.O. Box 1450
Alexandria, VA 22313-1450
www.uspto.gov

LAW OFFICE OF PHILIP A STEINER
1212 MARSH STREET
SUITE 3
SAN LUIS OBISPO CA 93401

COPY MAILED

FEB 0 4 2008

OFFICE OF PETITIONS

In re Application of
Shinichi Mukai
Application No. 11/419,743
Filed: May 22, 2006
Attorney Docket No. UT02152006

DECISION ON PETITION
TO WITHDRAW
FROM RECORD

This is a decision on the Request to Withdraw as attorney or agent of record under 37 C.F.R. § 1.36(b), filed September 14, 2007.

The request is **NOT APPROVED**.

A grantable request to withdraw as attorney/agent of record must be signed by every attorney/agent seeking to withdraw or contain a clear indication that one attorney is signing on behalf of another/others. A request to withdraw will not be approved unless at least 30 (thirty) days would remain between the date of approval and the later of the expiration date of a time to file a response or the expiration date of the maximum time period which can be extended under 37 C.F.R. § 1.136(a).

The Office cannot approve the request at this time since the reasons provided do not meet any of the conditions under the mandatory or permissive categories enumerated in 37 CFR 10.40. Section 10.40 of Title 37 of the Code of Federal Regulation states, "[a] practitioner shall not withdraw from employment in a proceeding before the Office without permission from the Office[.]" More specifically, 37 CFR 10.40 states, "[i]f paragraph (b) of this section is not applicable, a practitioner may not request permission to withdraw in matter pending before the Office unless such request or such withdrawal is" for one the permissive reasons listed in 37 CFR 10.40(c). The reasons set forth in the request, ***attorney of record has been hired by another law firm. New firm is limiting new clients to those compatible with the firm***, do not meet any the conditions set forth in 37 CFR 10.40.

All future communications from the Office will continue to be directed to the above-listed address until otherwise notified by applicant.

Telephone inquiries concerning this decision should be directed to Terri Williams at 571-272- 2991.

T. Williams
Terri Williams
Petitions Examiner
Office of Petitions

cc: **Shinichi Mukai**
2411 22nd Avenue
Kingsbury, CA 93631

UNITED STATES PATENT AND TRADEMARK OFFICE

UNITED STATES DEPARTMENT OF COMMERCE
United States Patent and Trademark Office
Address: COMMISSIONER FOR PATENTS
P.O. Box 1450
Alexandria, Virginia 22313-1450
www.uspto.gov

APPLICATION NO.	FILING DATE	FIRST NAMED INVENTOR	ATTORNEY DOCKET NO.	CONFIRMATION NO.
11/419,743	05/22/2006	Shinichi Mukai	UT02152006	9827

7590 01/13/2009
LAW OFFICE OF PHILIP A STEINER
1212 MARSH STREET
SUITE 3
SAN LUIS OBISPO, CA 93401

EXAMINER
KUMAR, KALYANAVENKA K

ART UNIT	PAPER NUMBER
3653	

MAIL DATE	DELIVERY MODE
01/13/2009	PAPER

DECISION GRANTING PETITION UNDER 37 CFR 1.138(d)

The declaration of express abandonment is recognized

This is in response to the petition under 37 CFR 1.138(d), requesting for a refund of any previously paid search fee and excess claims fee in the above-identified application.

The petition is granted.

The express abandonment is recognized. Any previously paid search fee and excess claims fee are hereby refunded.

Telephone inquiries should be directed to the Office of Data Management at (571) 272-4200.

Nioma Farmer

Patent Publication Branch
Office of Data Management

Adjustment Date: 01/14/2009 NFARMER
05/23/2006 INTEFSW 00000485 502086 11419743
02 FC:2111 250.00 CR

Refund Ref:
01/14/2009 0030065579

Credit Card Refund Total: $360.00

VISA....: XXXXXXXXXXXX5675

FORM PET651G (Rev. 08/07)

UNITED STATES PATENT AND TRADEMARK OFFICE

Commissioner for Patents
United States Patent and Trademark Office
P.O. Box 1450
Alexandria, VA 22313-1450
www.uspto.gov

ALBIHNS STOCKHOLM AB
BOX 5581, LINNEGATAN 2
SE-114 85 STOCKHOLM; SWEDENn
STOCKHOLM SE SWEDEN

COPY MAILED

JUN 18 2007

OFFICE OF PETITIONS

In re Application of	:	
Ake Rydgren	:	
Application No. 11/419,763	:	DECISION ON PETITION
Filed: May 23, 2006	:	TO WITHDRAW
Attorney Docket No. 83791	:	FROM RECORD
	:	

This is a decision on the Request to Withdraw as attorney or agent of record under 37 C.F.R. § 1.36(b), filed September 11, 2006.

The request is **NOT APPROVED**.

A grantable request to withdraw as attorney/agent of record must be signed by every attorney/agent seeking to withdraw or contain a clear indication that one attorney is signing on behalf of another/others. A request to withdraw will not be approved unless at least 30 (thirty) days would remain between the date of approval and the later of the expiration date of a time to file a response or the expiration date of the maximum time period which can be extended under 37 C.F.R. § 1.136(a).

The request cannot be approved because no reasons for withdrawal have been provided. The Office cannot, at this time, determine whether practitioner's request is one of the mandatory or permissive reasons enumerated in 37 CFR 10.40. Any subsequent requests must include reasons for withdrawal. Please note that there is a space provided for on PTO/SB/83 (Request to Withdraw as Attorney or Agent) to supply practitioner's reasons.

All future communications from the Office will continue to be directed to the above-listed address until otherwise notified by applicant.

Telephone inquiries concerning this decision should be directed to Terri Williams at 571-272- 2991.

Terri Williams
Petitions Examiner
Office of Petitions

SPE RESPONSE FOR CERTIFICATE OF CORRECTION

Paper No.:

DATE :

TO SPE OF : ART UNIT 2821

SUBJECT : Request for Certificate of Correction on Patent No.: 7,310,067

A response is requested with respect to the accompanying request for a certificate of correction.

Please complete this form and return with file, within **7** days to:
Certificates of Correction Branch - ST (South Tower) 9A22
Palm location **7590** - Tel. No. (703) 305-8309

With respect to the change(s) requested, correcting Office and/or Applicant's errors, should the patent read as shown in the certificate of correction? No new matter should be introduced, nor should the scope or meaning of the claims be changed.

Thank You For Your Assistance **Certificates of Correction Branch**

The request for issuing the above-identified correction(s) is hereby:

Note your decision on the appropriated box.

- ☒ **Approved** — All changes apply.
- ☐ **Approved in Part** — Specify below which changes **do not** apply.
- ☐ **Denied** — State the reasons for denial below.

Comments:

SPE: Roger K. Owen Art Unit 2821

UNITED STATES PATENT AND TRADEMARK OFFICE

Commissioner for Patents
United States Patent and Trademark Office
P.O. Box 1450
Alexandria, VA 22313-1450
www.uspto.gov

MAILED

JUN 08 2009

OFFICE OF PETITIONS

Charles C. McCloskey
763 S. New Ballas Road Suite 170
St. Louis, MO 93141

In re Application of	:	
Danethra C. Thomas	:	
Application No. 11/419,795	:	DECISION ON PETITION
Filed: May 23, 2006	:	TO WITHDRAW
Attorney Docket No. 97	:	FROM RECORD
	:	

This is a decision on the Request to Withdraw as attorney or agent of record under 37 C.F.R. § 1.36(b), filed April 22, 2009.

The request is **APPROVED**.

A grantable request to withdraw as attorney/agent of record must be signed by every attorney/agent seeking to withdraw or contain a clear indication that one attorney is signing on behalf of another/others. A request to withdraw will not be approved unless at least 30 (thirty) days would remain between the date of approval and the later of the expiration date of a time to file a response or the expiration date of the maximum time period which can be extended under 37 C.F.R. § 1.136(a).

The request was signed by Charles C. McCloskey on behalf of all attorneys of record. All attorneys/agents have been withdrawn. Applicant is reminded that there is no attorney of record at this time.

All future correspondence will be directed to the first named inventor Danethra C. Thomas at the address indicated below.

There is an outstanding Office action mailed January 13, 2009 that requires a reply from the applicant.

Telephone inquiries concerning this decision should be directed to Terri Williams at 571-272-2991.

Terri Williams
Petitions Examiner
Office of Petitions

cc: **Danethra C. Thomas**
PO Box 35032
St. Louis, MO 63135

UNITED STATES PATENT AND TRADEMARK OFFICE

UNITED STATES DEPARTMENT OF COMMERCE
United States Patent and Trademark Office
Address: COMMISSIONER FOR PATENTS
P.O. Box 1450
Alexandria, Virginia 22313-1450
www.uspto.gov

APPLICATION NUMBER	FILING OR 371(C) DATE	FIRST NAMED APPLICANT	ATTY. DOCKET NO./TITLE
11/419,795	05/23/2006	DANETHRA C. THOMAS	97

CONFIRMATION NO. 9950

POWER OF ATTORNEY NOTICE

27789
CHARLES C. MCCLOSKEY
763 S. NEW BALLAS ROAD STE. 170
ST. LOUIS, MO 63141

OC000000036350130

Date Mailed: 06/08/2009

NOTICE REGARDING CHANGE OF POWER OF ATTORNEY

This is in response to the Power of Attorney filed 04/22/2009.

- The withdrawal as attorney in this application has been accepted. Future correspondence will be mailed to the new address of record. 37 CFR 1.33.

/tswilliams/

Office of Data Management, Application Assistance Unit (571) 272-4000, or (571) 272-4200, or 1-888-786-0101

UNITED STATES PATENT AND TRADEMARK OFFICE

Commissioner for Patents
United States Patent and Trademark Office
P.O. Box 1450
Alexandria, VA 22313-1450
www.uspto.gov

MICHAEL P. MAZZA, LLC
686 CRESCENT BLVD.
GLEN ELYN IL 60137

COPY MAILED

MAR 16 2009

OFFICE OF PETITIONS

In re Application of
Arndt
Application No. 11/419,846
Filed/Deposited: 14 January, 2008
Attorney Docket No. 3388DIV

DECISION ON PETITION

This is a decision on the petition filed on 10 November, 2008, and properly considered as a petition requesting that the instant application be accorded a filing date of 23 May, 2006, under 37 C.F.R. §1.53.

The petition considered under 37 C.F.R. §1.53 is **DISMISSED**.

*Petitioner is given **one (1) month**, in no case less than thirty (30) days, to cure the signature deficiency herein. The period is **not** extendable under the provisions of 37 C.F.R. §1.136.*

BACKGROUND

It appears that the instant application was sought to be deposited on 23 May, 2006. (It also appears that on deposit such application papers as were deposite were associated with a Customer Number.)

For reasons unexplained by Petitioner, only papers such as, *inter alia*, a transmittal coversheet, Application Data Sheet (ADS), Information Disclosure Statement (IDS), preliminary amendment, drawings, and authorizations for fees were submitted at that time. It appears that no specification (description, claims, abstract) and drawings accompanying an original specification) were among the papers submitted on that date.

Moreover, the EFS Acknowledgement evidences that no specification (description, claims, abstract) and drawings) were among the papers submitted on that date.

On 3 December, 2007, the Office mailed a Notice of Incomplete Application and that the application had not been accorded a filing date (to wit: "the specification is missing ***. A complete specification as prescribed by 35 U.S.C. §112 is required."). (In addition, the Notice

indicated that no fully executed oath/declaration was present on filing—however, this element was a missing part of the application and was not controlling as to a filing date.)

The Office of Patent Application Processing (OPAP) indicated that Petitioner might:

- contend via petition that the application was complete upon deposit, and so evidence that condition with the proper supporting documentation (i.e., a date stamped receipt card (*see*: MPEP §503; also: an acknowledgment receipt is a legal equivalent of a post card receipt described in the Manual of Patent Examining Procedure (MPEP), Section 503. *See*: 1315 OG 57; 72 Fed. Reg. 2770 (23 Jan 2007)) along with a copy of specification/claim(s)/drawings/figures; or

- submit a copy of the specification/claim(s)/drawings/figures and accept the date of that submission as the filing date.

OPAP set a two- (2-) month period for reply.

On 14 January, 2008, Petitioner caused to be filed, *inter alia*, into the application the following papers:

- 11 pages of specification in the form of description, 5 pages of claims, 1 page of abstract, 1 sheet of drawings; and
- Oath/declaration.

Following a non-final Office action on 15 October, 2008, on 30 October, 2008, Petitioner Miachael P. Mazza (Reg. No. 34,092)) submitted the instant petition.

The paper is unsigned, to wit: "/s/Michael P. Mazza" is an improper electronic signature.

CONCLUSION

The petition considered under 37 C.F.R. §1.53 is **dismissed** as unsigned.

Further correspondence with respect to this matter should be addressed as follows:

By Mail: Mail Stop PETITION
Commissioner for Patents
P. O. Box 1450
Alexandria, VA 22313-1450

By hand: U. S. Patent and Trademark Office
Customer Service Window, Mail Stop Petitions
Randolph Building
401 Dulany Street
Alexandria, VA 22314

The centralized facsimile number is **(571) 273-8300.**

Telephone inquiries regarding this decision may be directed to the undersigned at (571) 272-3214—it is noted, however, that all practice before the Office is in writing (see: 37 C.F.R. §1.2[1]) and the proper authority for action on any matter in this regard are the statutes (35 U.S.C.), regulations (37 C.F.R.) and the commentary on policy (MPEP). Therefore, no telephone discussion may be controlling or considered authority for Petitioner's action(s).

/John J. Gillon, Jr./
John J. Gillon, Jr.
Senior Attorney
Office of Petitions

[1] The regulations at 37 C.F.R. §1.2 provide:
§1.2 Business to be transacted in writing.
All business with the Patent and Trademark Office should be transacted in writing. The personal attendance of applicants or their attorneys or agents at the Patent and Trademark Office is unnecessary. The action of the Patent and Trademark Office will be based exclusively on the written record in the Office. No attention will be paid to any alleged oral promise, stipulation, or understanding in relation to which there is disagreement or doubt.

UNITED STATES PATENT AND TRADEMARK OFFICE

Commissioner for Patents
United States Patent and Trademark Office
P.O. Box 1450
Alexandria, VA 22313-1450
www.uspto.gov

MICHAEL P. MAZZA, LLC
686 CRESCENT BLVD.
GLEN ELYN IL 60137

COPY MAILED

JUN 16 2009

OFFICE OF PETITIONS

In re Application of
Arndt
Application No. 11/419,846
Filed/Deposited: 23 May, 2006
Attorney Docket No. 3388DIV

DECISION ON PETITION

This is a decision on the petition filed on 8 April, 2009, requesting that the instant application be accorded a filing date of 23 May, 2006, under 37 C.F.R. §1.53, and a supplementary petition filed on 15 May, 2009, seeking to have accorded a filing date of 23 May, 2006, for the above-identified application, and more properly considered under 37 C.F.R. §1.57(a), based upon a showing that the omitted specification was present in the prior-filed co-pending provisional applications to which this application claimed benefit (under 37 C.F.R. §1.78) on filing.

For the reasons stated herein, the petition pursuant to 37 C.F.R. §1.57 is **GRANTED**; and the petition pursuant to 37 C.F.R. §1.53 is **DISMISSED** as moot.

BACKGROUND

It appears that the instant application was sought to be deposited on 23 May, 2006. (It also appears that on deposit such application papers as were deposited were associated with a Customer Number.)

For reasons unexplained at the outset by Petitioner, only papers such as, *inter alia*, a transmittal coversheet, Application Data Sheet (ADS), Information Disclosure Statement (IDS), preliminary amendment, drawings, and authorizations for fees were submitted at that time. It appears that no specification (description, claims, abstract) and drawings accompanying an original specification) were among the papers submitted on that date. Moreover, the EFS Acknowledgement evidences that no specification (description, claims, abstract) and drawings) were among the papers submitted on that date.

On 3 December, 2007, the Office mailed a Notice of Incomplete Application and that the application had not been accorded a filing date (to wit: "the specification is missing ***. A complete specification as prescribed by 35 U.S.C. §112 is required."). (In addition, the Notice

indicated that no fully executed oath/declaration was present on filing—however, this element was a missing part of the application and was not controlling as to a filing date.)

The Office of Patent Application Processing (OPAP) indicated that Petitioner might:

- contend via petition that the application was complete upon deposit, and so evidence that condition with the proper supporting documentation (i.e., a date stamped receipt card (*see*: MPEP §503; also: an acknowledgment receipt is a legal equivalent of a post card receipt described in the Manual of Patent Examining Procedure (MPEP), Section 503. *See*: 1315 OG 57; 72 Fed. Reg. 2770 (23 Jan 2007)) along with a copy of specification/claim(s)/drawings/figures; or

- submit a copy of the specification/claim(s)/drawings/figures and accept the date of that submission as the filing date.

OPAP set a two- (2-) month period for reply.

On 14 January, 2008, Petitioner caused to be filed, *inter alia*, into the application the following papers:

- 11 pages of specification in the form of description, 5 pages of claims, 1 page of abstract, 1 sheet of drawings; and
- Oath/declaration.

Following a non-final Office action on 15 October, 2008, on 30 October, 2008, Petitioner Miachael P. Mazza (Reg. No. 34,092)) submitted a petition. The paper was unsigned, to wit: "/s/Michael P. Mazza" is an improper electronic signature—and the petition was dismissed on 16 March, 2009.

On 8 April, 2009, Petitioner filed a petition pursuant to under 37 C.F.R. §1.53 requesting that the instant application be accorded a filing date of 23 May, 2006.

On 15 May, 2009, Petitioner filed a petition pursuant to 37 C.F.R. §1.57(a) seeking to have accorded a filing date of 23 May, 2006, for the above-identified application based upon a showing that the omitted specification was present in the prior-filed co-pending nonprovisional applications to which this application claimed benefit (under 37 C.F.R. §1.78) on filing. Petitioner included therewith, *inter alia*, an amendment with the specification averred to be a copy of that contained in and with claim with priority to nonprovisional Application No. 10/322,062, filed on 17 December, 2002. Petitioner averred the specification to be due entry as fully supported by the nonprovisional Application No. 10/322,062, filed on 17 December, 2002, to which application a priority claim was made in the instant application. And Petitioner:

- asserted that the specification was inadvertently omitted from the instant application;

- pointed to the prior filed nonprovisional Application No. 10/322,062, filed on 17 December, 2002, and to the claim for priority thereto made in the specification of the instant application; and

- sought to obtain an incorporation by reference herein under the provisions of 37 C.F.R. §1.57(a).

Thus, Petitioner requested that the application be amended to include the inadvertently omitted specification on the basis that the application as filed contained a prior-benefit claim under 37 C.F.R. §1.55 or §1.78.

APPLICABLE LAW, RULES AND MPEP

Petition under 37 C.F.R.§1.57(a)

37 C.F.R.§1.57, Incorporation by reference, states:

> (a) Subject to the conditions and requirements of this paragraph, if all or a portion of the specification or drawing(s) is inadvertently omitted from an application, but the application contains a claim under §1.55 for priority of a prior-filed foreign application, or a claim under §1.78 for the benefit of a prior-filed provisional, nonprovisional, or international application, that was present on the filing date of the application, and the inadvertently omitted portion of the specification or drawing(s) is completely contained in the prior-filed application, the claim under §1.55 or §1.78 shall also be considered an incorporation by reference of the prior-filed application as to the inadvertently omitted portion of the specification or drawing(s). (Emphasis supplied).

ANALYSIS

Petitioner has included a proper priority claim the prior filed nonprovisional Application No. 10/322,062, filed on 17 December, 2002, in the application data sheet (ADS) filed with the application papers on 23 May, 2006. Therefore, based upon applicant's incorporation by reference of the contents of the nonprovisional application on filing of the present application, a filing date of 23 May, 2006, may be accorded the present application. A preliminary amendment to add the inadvertently omitted material is required and appears to have been filed with the instant petition.

CONCLUSION

Accordingly, the petition pursuant to 37 C.F.R. §1.57 is **granted**; the petition pursuant to 37 C.F.R. §1.53 is **dismissed as moot**.

This application is being forwarded to the Office of Patent Application Processing (OPAP) formerly Office of Initial Patent Examination (OIPE), for further processing, with the filing date of 23 May, 2006, using the application papers present on that date, and specification and preliminary amendment submitted on 15 May, 2009.

Any questions concerning this matter may be directed to John Gillon at (571) 272-3214. All other inquiries concerning either the examination procedures or status of the application should be directed to the Technology Center.

Anthony Knight
Supervisor
Office of Petitions

UNITED STATES PATENT AND TRADEMARK OFFICE

Commissioner for Patents
United States Patent and Trademark Office
P.O. Box 1450
Alexandria, VA 22313-1450
www.uspto.gov

MICHAEL P. MAZZA, LLC
686 CRESCENT BLVD.
GLEN ELYN IL 60137

COPY MAILED
JUN 16 2009
OFFICE OF PETITIONS

In re Application of :
Arndt :
Application No. 11/419,846 : DECISION ON PETITION
Filed/Deposited: 23 May, 2006 :
Attorney Docket No. 3388DIV :

This is a decision on the petition filed on 15 May, 2009, under the provisions of 37 C.F.R. §1.137(b), seeking revival of the application as having been abandoned due to unintentional delay.

The petition as considered under 37 C.F.R. §1.137(b) is **GRANTED**.

As to Allegations of
Unintentional Delay

The requirements of a grantable petition pursuant to 37 C.F.R. §1.137(b) are the petition and fee therefor, a reply, a proper statement of unintentional delay under the regulation, and, where applicable, a terminal disclaimer and fee. (However, it does not appear that a terminal disclaimer and fee are due here.)

Petitioners' attentions always are directed to the Commentary at MPEP §711.03(c) for guidance as to satisfying the requirements for relief under 37 C.F.R. §1.137.

BACKGROUND

The record reflects as follows:

Petitioner failed to reply timely and properly to the non-final Office action mailed on 15 October, 2008, with reply due absent an extension of time on or before 15 January, 2009.

The application went abandoned after midnight 15 January, 2009.

The Office mailed the Notice of Abandonment on 28 April, 2009.

On 15 May, 2009, Petitioner filed, *inter alia*, a petition (with fee) pursuant to 37 C.F.R. §1.137(b) and averred unintentional delay, with a reply in the form of an amendment.

The availability of applications and application papers online to applicants/practitioners who diligently associate their Customer Number with the respective application(s) now provides an applicant/practitioner on-demand information as to events/transactions in an application.

Out of an abundance of caution, Petitioners always are reminded that those registered to practice and all others who make representations before the Office **must** inquire into the underlying facts of representations made to the Office and support averments with the appropriate documentation–since all owe to the Office the continuing duty to disclose.[1]

STATUTES, REGULATIONS AND ANALYSIS

Congress has authorized the Commissioner to "revive an application if the delay is shown to the satisfaction of the Commissioner to have been "unavoidable." 35 U.S.C. §133 (1994).[2]
The regulations at 37 C.F.R. §1.137(a) and (b) set forth the requirements for a Petitioner to revive a previously unavoidably or unintentionally, respectively, abandoned application under this congressional grant of authority.

Unintentional delays are those that do not satisfy the very strict statutory and regulatory requirements of unavoidable delay, and also, by definition, are not intentional.[3]))

As to Allegations of Unintentional Delay

The requirements of a grantable petition pursuant to 37 C.F.R. §1.137(b) are the petition and fee therefor, a reply, a proper statement of unintentional delay under the regulation, and, where applicable, a terminal disclaimer and fee.

It appears that the requirements under 37 C.F.R. §1.137(b) have been satisfied.

---

[1] See supplement of 17 June, 1999. The Patent and Trademark Office is relying on petitioner's duty of candor and good faith and accepting a statement made by Petitioner. See Changes to Patent Practice and Procedure, 62 Fed. Reg. at 53160 and 53178, 1203 Off. Gaz. Pat. Office at 88 and 103 (responses to comments 64 and 109)(applicant obligated under 37 C.F.R. §10.18 to inquire into the underlying facts and circumstances when providing statements to the Patent and Trademark Office).

[2] 35 U.S.C. §133 provides:

35 U.S.C. §133 Time for prosecuting application.

Upon failure of the applicant to prosecute the application within six months after any action therein, of which notice has been given or mailed to the applicant, or within such shorter time, not less than thirty days, as fixed by the Commissioner in such action, the application shall be regarded as abandoned by the parties thereto, unless it be shown to the satisfaction of the Commissioner that such delay was unavoidable.

[3] Therefore, by example, an unintentional delay in the reply might occur if the reply and transmittal form are to be prepared for shipment by the US Postal Service, but other pressing matters distract one's attention and the mail is not timely deposited for shipment.

CONCLUSION

Accordingly, the petition under 37 C.F.R. §1.137(b) is **granted**.

The instant application is released to Technology Center/AU 3728 for further procesing in due course.

Petitioner may find it beneficial to view Private PAIR within a fortnight of the instant decision to ensure that the revival has been acknowledged by the TC/AU in response to this decision. It is noted that all inquiries with regard to that change in status need be directed to the TC/AU where that change of status must be effected—that does not occur in the Office of Petitions.

Telephone inquiries regarding this decision may be directed to the undersigned at (571) 272-3214—it is noted, however, that all practice before the Office is in writing (see: 37 C.F.R. §1.2[4]) and the proper authority for action on any matter in this regard are the statutes (35 U.S.C.), regulations (37 C.F.R.) and the commentary on policy (MPEP). Therefore, no telephone discussion may be controlling or considered authority for Petitioner's action(s).

/John J. Gillon, Jr./
John J. Gillon, Jr.
Senior Attorney
Office of Petitions

[4] The regulations at 37 C.F.R. §1.2 provide:
§1.2 Business to be transacted in writing.
All business with the Patent and Trademark Office should be transacted in writing. The personal attendance of applicants or their attorneys or agents at the Patent and Trademark Office is unnecessary. The action of the Patent and Trademark Office will be based exclusively on the written record in the Office. No attention will be paid to any alleged oral promise, stipulation, or understanding in relation to which there is disagreement or doubt.

UNITED STATES PATENT AND TRADEMARK OFFICE

Commissioner for Patents
United States Patent and Trademark Office
P.O. Box 1450
Alexandria, VA 22313-1450
www.uspto.gov

12/5/07

MICHAEL H. MINNS
HAHN LOESER & PARKS LLP
ONE GOJO PLAZA, SUITE 300
AKRON, OH 44311-1076

In re Application of:
Ebert, Detlef
Serial No. 11/419,877
Filed: May 23, 2006
Docket: 200558.00019

Title: SYSTEM COMPRISING A CLIP MACHINE AND A CLIP SUPPLY AND METHOD OF OPERATING SUCH A CLIP MACHINE

DECISION ON PETITION

This is a decision on the petition filed on June 12, 2007. Petitioner requests an extension of time to respond to the Requirement for Restriction/Election, filed May 29, 2007.

The petition is dismissed

Background

On May 29, 2007 the examiner filed a Requirement for Restriction/Election. This Office action provided a one month time period for reply, beginning on the mailing date of the communication. The Office action also stated that a Notice of the Office communication was sent electronically on the "Notification Date" listed as May 29, 2007. However, the Private PAIR Correspondence Notification was not sent on May 29, 2007, it was sent seven days later, on June 5, 2007. On June 12, 2007 the present petition to reset the period for response was filed. On June 29, 2007 a response to the restriction requirement was filed.

Discussion

A review of the application indicates that the Office Action was entered into the record with an official mailing date of May 29, 2007. The Office Action also indicated that a Private PAIR Correspondence Notification was sent electronically on May 29, 2007. However, the correspondence notification was actually sent seven days later, on June 5, 2007.

With respect to Private PAIR Correspondence, the United States Patent and Trademark Office January 16, 2007 Official Gazette states:

> The Office will send a notification to each provided email address if a new outgoing correspondence has been prepared for the patents or patent

> applications associated with the user's Customer Number. Each email notification will list all applications, associated with the corresponding Customer Number, in which new outgoing correspondence was prepared for the corresponding electronic application files within the preceding 24 hours. Each email notification will be entered into the corresponding application files. The new outgoing correspondence will become available for viewing and downloading through Private PAIR within two business days of the date of the email notification.
>
> The email notification described above will be sent after the Office action has been prepared and entered into the record. The period for reply to any Office correspondence to which a reply is required will commence on the date indicated on the outgoing Office correspondence (i.e., the date the correspondence becomes available for viewing). The date indicated on the Office correspondence will also be considered the date of mailing of such outgoing correspondence for all other purposes (e.g., 37 CFR 1.71(g)(2), 1.97(b), 1.701 through 1.705). The Office communication will become available for downloading and viewing through Private PAIR on the date indicated on the correspondence.

In the present application, the Private PAIR correspondence system did not provide notification of the new outgoing correspondence filed by the examiner in the preceding 24 hours. Instead, the Private PAIR correspondence was sent seven days after the filing of the Office action. As outlined in the Office Gazette, the period for reply to any Office correspondence commences on the date indicated on the outgoing Office correspondence, not the date of the Private PAIR correspondence. Participants in the Private PAIR system no longer receive paper mailing for most correspondence originating from a Technology Center. Therefore, without a timely Private PAIR correspondence notifying the petitioner that an Office action had been entered into the record, a petitioner would not be informed of the filing of an Office action or the commencement of the one-month period for reply. The petitioner in the present application did not receive a timely Private PAIR correspondence. As a result, the petitioner essentially lost the time period from May 29, 2007 to June 6, 2007 to reply to the Office Action.

Ordinarily, the petitioner would have been granted a one-week extension. However, the response to the restriction requirement was filed in a timely manner. Therefore, the extended period for response is unnecessary and no further action is required.

Decision

The petition to restart the period of response to the Office action filed May 29, 2007 is hereby dismissed as moot.

PETITION DISMISSED.

Any inquiry regarding this decision should be directed to Allan N. Shoap, Special Programs Examiner, at (571) 272-4514.

Karen M. Young
for Frederick R. Schmidt, Director
Technology Center 3700

UNITED STATES PATENT AND TRADEMARK OFFICE

Commissioner for Patents
United States Patent and Trademark Office
P.O. Box 1450
Alexandria, VA 22313-1450
www.uspto.gov

GEAM - O8CV - CPP
IP LEGAL
ONE PLASTICS AVENUE
PITTSFIELD, MA 01201-3697

COPY MAILED

APR 0 4 2007

OFFICE OF PETITIONS

In re Application of	:	
Claire Qing Yu	:	DECISION
Application No. 11/419912	:	ON PETITION
Filing or 371(c) Date: 05/23/2006	:	
Attorney Docket Number: 214098-1	:	

This is a decision on the Petition for Revival of an Application for Patent Abandoned Unintentionally Under 37 C.F.R. § 1.137(b), January 5, 2007.

This Petition is hereby **granted**.

The above-identified application became abandoned for failure to timely reply to the Notice to File Missing Parts of Nonprovisional Application ("Notice"), mailed June 2, 2006. The Notice required the application search fee and examination fee. The Notice set a two (2) month period for reply. Extensions of time under 37 CFR 1.136(a) were available. No reply having been received, the application became abandoned on August 3, 2006. The mailing of this decision precedes the mailing of a Notice of Abandonment.

Applicant files the instant petition in response oath and late filing oath or declaration surcharge. Accordingly, the petition is granted.

This application is being forwarded to the Office of Initial Patent Examination for continued processing in due course.

Telephone inquiries concerning this decision should be directed to the undersigned at (571) 272-3232.

Derek L. Woods
Attorney
Office of Petitions

UNITED STATES PATENT AND TRADEMARK OFFICE

Commissioner for Patents
United States Patent and Trademark Office
P.O. Box 1450
Alexandria, VA 22313-1450
www.uspto.gov

SABIC - O8CV - CPP
SABIC Innovative Plastics - IP Legal
ONE PLASTICS AVENUE
PITTSFIELD MA 01201-3697

COPY MAILED

FEB 24 2009

OFFICE OF PETITIONS

In re Application of	:	
Yu, et al.	:	
Application No. 11/419,912	:	DECISION
Filed/Deposited: 23 May, 2006	:	
Attorney Docket No. 214098-1 (P09-0132P)	:	

This is a decision on the petition, filed on 1 August, 2008, to revive under 37 C.F.R. §1.137(b) and alleging abandonment due to unintentional delay.

It is noted that the address on the petition is not that of record (set forth above)—while a copy of the instant decision is being forwarded to the address on the petition as a matter of courtesy, in the absence of the filing of an appropriate Notice of Change of Address or other such paper, all correspondence will be directed to the address of record.

The petition under 37 C.F.R. §1.137(b) is **DISMISSED**.

Any request for reconsideration of this decision must be submitted within TWO (2) MONTHS from the mail date of this decision. Extensions of time under 37 CFR §1.136(a) are permitted. The reconsideration request should include a cover letter entitled "Renewed Petition under 37 CFR §1.137(b)."

This is **not** a final agency action within the meaning of 5 U.S.C. §704.

As to the Allegations
of Unintentional Delay

The requirements of a grantable petition pursuant to 37 C.F.R. §1.137(b) are the petition and fee therefor, a reply, a proper statement and/or showing of unintentional delay under the regulation,

and, where applicable, a terminal disclaimer and fee. (It does not appear that a terminal disclaimer and fee are required here.)

It appears that Petitioner has not satisfied the requirements of the regulation, to wit: The instant petition was filed without a proper reply (*see*: the enclosed copy of the non-final Office action.

BACKGROUND

The record reflects that:

Petitioner failed to reply timely and properly to the non-final Office action mailed on 10 January, 2008, with reply due absent an extension of time on or before 10 April, 2008.

The application went abandoned after midnight 10 April, 2008.

It does not appear that the Office mailed the Notice of Abandonment before the original petition was filed.

On 1 August, 2008, Petitioner submitted a petition pursuant to 37 C.F.R. §1.137(b), with fee, but as of this writing it does not appear that Petitioner has provided a complete and proper reply. While Petitioner has made the statement of unintentional delay, *it is not apparent whether the person signing the statement of unintentional delay was in a position to have firsthand or direct knowledge of the facts and circumstances of the delay at issue. Either any renewed petition must be made by the person under whose control the application went abandoned or Petitioner* ***must*** *make a reasonable inquiry into the facts and circumstances of such delay.*[1] *If such inquiry results in the discovery that it is not correct that the entire delay in filing the required reply from the due date for the reply until the filing of a grantable petition pursuant to 37 C.F.R. §1.137(b) was unintentional, Petitioner* ***must*** *notify the Office.*

In regard to these deficiencies, Petitioner's attention is drawn also to the guidance in the Commentary at MPEP §711.03(c)(II) (see: http://www.uspto.gov/web/offices/pac/mpep/documents/0700_711_03_c.htm#sect711.03c).

The Office mailed the Notice of Abandonment on 21 June, 2007.

---

[1] See 37 C.F.R. §10.18(b) and Changes to Patent Practice and Procedure; Final Rule Notice, 62 Fed. Reg. 53131, 53178 (October 10, 1997), 1203 Off. Gaz. Pat. Office 63, 103 (October 21, 1997).

The availability of applications and application papers online to applicants/practitioners who diligently associate their Customer Number with the respective application(s) now provides an applicant/practitioner on-demand information as to events/transactions in an application. Thus, now if one wishes to know the progress in and/or status of an application or the accuracy of the data therein, one need only look at the file online.

Out of an abundance of caution, Petitioners always are reminded that those registered to practice *and* all others who make representations before the Office must inquire into the underlying facts of representations made to the Office and support averments with the appropriate documentation–since all owe to the Office the continuing duty to disclose.[2]

STATUTES, REGULATIONS

Congress has authorized the Commissioner to "revive an application if the delay is shown to the satisfaction of the Commissioner to have been "unavoidable." 35 U.S.C. §133 (1994).

The regulations at 37 C.F.R. §1.137(a) and (b) set forth the requirements for a Petitioner to revive a previously unavoidably or unintentionally, respectively, abandoned application.[3],[4]

As to Satisfaction of Requirements under the Rule

As indicated above, the requirements of a grantable petition pursuant to 37 C.F.R. §1.137(b) are the petition and fee therefor, a proper reply, a proper statement and/or showing of unintentional delay under the regulation, and, where applicable, a terminal disclaimer and fee.

It does not appear that Petitioner has satisfied the reply requirement under the rule.

---

[2] See supplement of 17 June, 1999. The Patent and Trademark Office is relying on petitioner's duty of candor and good faith and accepting a statement made by Petitioner. See Changes to Patent Practice and Procedure, 62 Fed. Reg. at 53160 and 53178, 1203 Off. Gaz. Pat. Office at 88 and 103 (responses to comments 64 and 109)(applicant obligated under 37 C.F.R. §10.18 to inquire into the underlying facts and circumstances when providing statements to the Patent and Trademark Office). See specifically, the regulations at 37 C.F.R. §10.18.

[3] See: Changes to Patent Practice and Procedure; Final Rule Notice, 62 Fed. Reg. at 53158-59 (October 10, 1997), 1203 Off. Gaz. Pat. Office at 86-87 (October 21, 1997).

[4] The language of 35 U.S.C. §133 and 37 C.F.R. §1.137(a) is clear, unambiguous, and without qualification: the delay in tendering the reply to the outstanding Office action, as well as filing the first petition seeking revival, must have been unavoidable for the reply now to be accepted on petition. (Therefore, by example, an unavoidable delay in the payment of the Filing Fee might occur if a reply is shipped by the US Postal Service, but due to catastrophic accident, the delivery is not made.) Delays in responding properly raise the question whether delays are unavoidable. Where there is a question whether the delay was unavoidable, Petitioners must meet the burden of establishing that the delay was unavoidable within the meaning of 35 U.S.C. §133 and 37 C.F.R. §1.137(a) And the Petitioner must be diligent in attending to the matter. Failure to do so does not constitute the care required under Pratt, and so cannot satisfy the test for diligence and due care. (By contrast, unintentional delays are those that do not satisfy the very strict statutory and regulatory requirements of unavoidable delay, and also, by definition, are not intentional.))

CONCLUSION

The instant petition under 37 C.F.R. §1.137(b) is **dismissed**.

Further correspondence with respect to this matter should be addressed as follows:

By Mail: Mail Stop PETITION
Commissioner for Patents
P. O. Box 1450
Alexandria, VA 22313-1450

By hand: U. S. Patent and Trademark Office
Customer Service Window, Mail Stop Petitions
Randolph Building
401 Dulany Street
Alexandria, VA 22314

The centralized facsimile number is **(571) 273-8300.**

Telephone inquiries regarding this decision may be directed to the undersigned at (571) 272-3214—it is noted, however, that all practice before the Office is in writing (see: 37 C.F.R. §1.2[5]) and the proper authority for action on any matter in this regard are the statutes (35 U.S.C.), regulations (37 C.F.R.) and the commentary on policy (MPEP). Therefore, no telephone discussion may be controlling or considered authority for Petitioner's action(s).

/John J. Gillon, Jr./
John J. Gillon, Jr.
Senior Attorney
Office of Petitions

cc:
LEAH M. REIMER, PHD.
CANTOR COLBURN, LLP
20 CHURCH STREET
22ND FLOOR
HARTFORD, CT 06103

---

[5] The regulations at 37 C.F.R. §1.2 provide:
§1.2 Business to be transacted in writing.
All business with the Patent and Trademark Office should be transacted in writing. The personal attendance of applicants or their attorneys or agents at the Patent and Trademark Office is unnecessary. The action of the Patent and Trademark Office will be based exclusively on the written record in the Office. No attention will be paid to any alleged oral promise, stipulation, or understanding in relation to which there is disagreement or doubt.

UNITED STATES PATENT AND TRADEMARK OFFICE

UNITED STATES DEPARTMENT OF COMMERCE
United States Patent and Trademark Office
Address: COMMISSIONER FOR PATENTS
P.O. Box 1450
Alexandria, Virginia 22313-1450
www.uspto.gov

APPLICATION NO.	FILING DATE	FIRST NAMED INVENTOR	ATTORNEY DOCKET NO.	CONFIRMATION NO.
11/419,912	05/23/2006	Claire Qing Yu	214098-1	1140

43252 7590 01/10/2008
SABIC - O8CV - CPP
SABIC Innovative Plastics - IP Legal
ONE PLASTICS AVENUE
PITTSFIELD, MA 01201-3697

EXAMINER
ARNBERG, MEGAN C

ART UNIT	PAPER NUMBER
1796	

MAIL DATE	DELIVERY MODE
01/10/2008	PAPER

Please find below and/or attached an Office communication concerning this application or proceeding.

The time period for reply, if any, is set in the attached communication.

Office Action Summary	Application No.	Applicant(s)
	11/419,912	YU ET AL.
	Examiner	Art Unit
	Megan Arnberg	1796

-- The MAILING DATE of this communication appears on the cover sheet with the correspondence address --

Period for Reply

A SHORTENED STATUTORY PERIOD FOR REPLY IS SET TO EXPIRE 3 MONTH(S) OR THIRTY (30) DAYS, WHICHEVER IS LONGER, FROM THE MAILING DATE OF THIS COMMUNICATION.

- Extensions of time may be available under the provisions of 37 CFR 1.136(a). In no event, however, may a reply be timely filed after SIX (6) MONTHS from the mailing date of this communication.
- If NO period for reply is specified above, the maximum statutory period will apply and will expire SIX (6) MONTHS from the mailing date of this communication.
- Failure to reply within the set or extended period for reply will, by statute, cause the application to become ABANDONED (35 U.S.C. § 133). Any reply received by the Office later than three months after the mailing date of this communication, even if timely filed, may reduce any earned patent term adjustment. See 37 CFR 1.704(b).

Status

1)☒ Responsive to communication(s) filed on *05 January 2007*.

2a)☐ This action is **FINAL**. 2b)☒ This action is non-final.

3)☐ Since this application is in condition for allowance except for formal matters, prosecution as to the merits is closed in accordance with the practice under *Ex parte Quayle*, 1935 C.D. 11, 453 O.G. 213.

Disposition of Claims

4)☒ Claim(s) *1-11* is/are pending in the application.

4a) Of the above claim(s) _____ is/are withdrawn from consideration.

5)☐ Claim(s) _____ is/are allowed.

6)☒ Claim(s) *1-11* is/are rejected.

7)☒ Claim(s) *4-9* is/are objected to.

8)☐ Claim(s) _____ are subject to restriction and/or election requirement.

Application Papers

9)☒ The specification is objected to by the Examiner.

10)☐ The drawing(s) filed on _____ is/are: a)☐ accepted or b)☐ objected to by the Examiner.

Applicant may not request that any objection to the drawing(s) be held in abeyance. See 37 CFR 1.85(a).

Replacement drawing sheet(s) including the correction is required if the drawing(s) is objected to. See 37 CFR 1.121(d).

11)☒ The oath or declaration is objected to by the Examiner. Note the attached Office Action or form PTO-152.

Priority under 35 U.S.C. § 119

12)☐ Acknowledgment is made of a claim for foreign priority under 35 U.S.C. § 119(a)-(d) or (f).

a)☐ All b)☐ Some * c)☐ None of:

1.☐ Certified copies of the priority documents have been received.

2.☐ Certified copies of the priority documents have been received in Application No. _____.

3.☐ Copies of the certified copies of the priority documents have been received in this National Stage application from the International Bureau (PCT Rule 17.2(a)).

* See the attached detailed Office action for a list of the certified copies not received.

Attachment(s)

1) ☒ Notice of References Cited (PTO-892)

2) ☐ Notice of Draftsperson's Patent Drawing Review (PTO-948)

3) ☒ Information Disclosure Statement(s) (PTO/SB/08) Paper No(s)/Mail Date *09/25/2006; 09/21/2006*.

4) ☐ Interview Summary (PTO-413) Paper No(s)/Mail Date. _____ .

5) ☐ Notice of Informal Patent Application

6) ☐ Other: _____.

DETAILED ACTION

Oath/Declaration

The oath or declaration is defective. A new oath or declaration in compliance with 37 CFR 1.67(a) identifying this application by application number and filing date is required. See MPEP §§ 602.01 and 602.02.

The oath or declaration is defective because:
Non-initialed and/or non-dated alterations have been made to the oath or declaration. See 37 CFR 1.52(c).

Specification

The disclosure is objected to because of the following informalities: on page 12, 3rd full paragraph, squares precede several words. It is unknown what the squares stand for and appears to be typographical errors.

Appropriate correction is required.

Claim Objections

Claims 4-9 are objected to because of the following informalities: the word "claim" should not be capitalized. Appropriate correction is required.

Claim Rejections - 35 USC § 102

The following is a quotation of the appropriate paragraphs of 35 U.S.C. 102 that form the basis for the rejections under this section made in this Office action:

A person shall be entitled to a patent unless –

(b) the invention was patented or described in a printed publication in this or a foreign country or in public use or on sale in this country, more than one year prior to the date of application for patent in the United States.

Claims 1, 2, 3, 4, 5 and 8 are rejected under 35 U.S.C. 102(b) as being anticipated by Laughner (U.S. Pat. 5,369,154).

Regarding claims 1, 2, 3, 4: '154 teaches articles (col. 2 lines 10-20) made of a composition comprising a polycarbonate component (abstract) in an amount of 70% by weight (Table II, example 1), a polyester component (col. 1 line 56), specifically polyethylene terephthalate (col. 17 lines 60-61) in an amount of 20% by weight (Table II, example 1), an impact modifier (abstract), specifically a styrene/butadiene block thermoplastic elastomer copolymer (col. 18 lines 15-20) in an amount of 5% by weight (Table II, example 1), and a multifunctional additive comprising at least one epoxy group (col. 1 lines 59-61), specifically glycidyl methacrylate (col. 18 line 5) in an amount of 5% by weight (Table II, example 1).

Regarding claim 5: While '154 does not specifically teach the viscosity of the composition is less than about 500 Pa-s at 271 °C as measured by capillary rheometry following the ISO 11443 standard, since all of the components are present in the composition, it is inherent that the composition would have this property. If it is applicants' position that this would not be the case: (1) evidence would need to be presented to support applicants' position; and (2) it would be the Office's position that the application contains inadequate disclosure that there is no teaching as to how to obtain a composition with this property.

Regarding claim 8: The composition is injection molded (col. 17 lines 25-30).

Claims 1, 2, and 8 are rejected under 35 U.S.C. 102(b) as being anticipated by Mason et al. (U.S. Pat. 5,508,344).

Regarding claims 1, 2: Mason et al. teaches articles (col. 7 lines 5-6) made of a composition comprising a polycarbonate (col. 1 lines 57-58) in an amount of 57% by weight (example 2 of the table), a polyester (col. 1 line 61) in an amount of 37% by weight (example 2 of the table), an impact modifier (col. 1 line 63) in an amount of 6% by weight (example 2 of the table), and a multifunctional additive comprising at least on epoxy group (col. 1 lines 64-67).

Regarding claim 8: The composition is injection molded (col. 8 lines 1-5).

Claim Rejections - 35 USC § 103

The following is a quotation of 35 U.S.C. 103(a) which forms the basis for all obviousness rejections set forth in this Office action:

> (a) A patent may not be obtained though the invention is not identically disclosed or described as set forth in section 102 of this title, if the differences between the subject matter sought to be patented and the prior art are such that the subject matter as a whole would have been obvious at the time the invention was made to a person having ordinary skill in the art to which said subject matter pertains. Patentability shall not be negatived by the manner in which the invention was made.

This application currently names joint inventors. In considering patentability of the claims under 35 U.S.C. 103(a), the examiner presumes that the subject matter of the various claims was commonly owned at the time any inventions covered therein were made absent any evidence to the contrary. Applicant is advised of the obligation under 37 CFR 1.56 to point out the inventor and invention dates of each claim that was not commonly owned at the time a later invention was made in order for the examiner to

consider the applicability of 35 U.S.C. 103(c) and potential 35 U.S.C. 102(e), (f) or (g) prior art under 35 U.S.C. 103(a).

Claims 3, 4, and 6 are rejected under 35 U.S.C. 103(a) as being unpatentable over Mason et al. (U.S. Pat. 5,508,344) as applied to claim 1 above.

Regarding claims 3, 4: Mason et al. teaches the basic claimed article as set forth above. Not disclosed is the amount of the multifunctional additive. However, the experimental modification of this prior art in order to ascertain optimum operating conditions fails to render applicants' claims patentable in the absence of unexpected results. See *In re Aller*, 105, USPQ 233 and MPEP 2144.05. At the time of the invention a person having ordinary skill in the art would have found it obvious to optimize the amount of the multifunctional additive and would have been motivated to do so for such desirable properties as a good cure rate and elasticity. A prima facie case of obviousness may be rebutted, however, where the results of the optimizing variable which is known to be result-effective, are unexpectedly good. See *In re Boesch and Slaney*, 205 USPQ 215.

Regarding claim 6: The additive has an epoxy and a silane group (col. 1 lines 66-67).

Claim 7 is rejected under 35 U.S.C. 103(a) as being unpatentable over Laughner (U.S. Pat. 5,369,154) as applied to claims 1-4 above and in view of Greenwood (US 2004/0077768).

Regarding claim 7: '154 teaches the basic claimed article as set forth above. Not disclosed is the multifunctional additive having two epoxy groups. However, Greenwood teaches a composition comprising beta-(3,4-epoxycyclohexyl)ethyltriethoxysilane (para. 20), which has two epoxy groups per molecule in a mixture of polyesters (para. 21) and polycarbonates (para. 34). '154 and Greenwood are combinable because they are both concerned with the same field of endeavor, namely polyester and polycarbonate compositions. At the time of the invention a person having ordinary skill in the art would have found it obvious to combine the beta-(3,4-epoxycyclohexyl)ethyltriethoxysilane of Greenwood with the composition of '154 and would have been motivated to do so because of such desirable properties as resin stability and adhesiveness.

Claims 1, 2, 3, 4, and 9 are rejected under 35 U.S.C. 103(a) as being unpatentable over Laughner (U.S. Pat. 5,087,663).

Regarding claims 1, 2, 3, 4, and 9: '663 teaches an object/article (col. 1 lines 45-50) made of a composition comprising polycarbonate component/carbonate polymer (abstract), a polyester (col. 3 lines 40-50), an impact modifier (col. 3 line 10) and a multifunctional additive with at least one epoxy group, specifically epoxy soybean oil (col. 6 lines 5-12). Also disclosed is the composition used in thermoforming applications (abstract). Not disclosed are the amounts of the components. However, the amounts of components are result effective variables which can be optimized. At the time of the invention a person having ordinary skill in the art would have found it obvious to

optimize the polycarbonate and polyester and would have been motivated to do so for such desirable properties as adhesiveness and flexibility. At the time of the invention a person having ordinary skill in the art would have found it obvious to optimize impact modifier and would have been motivated to do so for such desirable properties as impact resistance. At the time of the invention a person having ordinary skill in the art would have found it obvious to optimize the epoxy additive and would have been motivated to do so for such desirable properties as desired amount of crosslinking and adhesiveness.

Claim 10 is rejected under 35 U.S.C. 103(a) as being anticipated by Laughner (U.S. Pat. 5,369,154) when taken with Avetisian et al. (US 2003/0154876).

Regarding claim 10: '154 teaches articles (col. 2 lines 10-20) made of a composition comprising a polycarbonate component (abstract) in an amount of 70% by weight (Table II, example 1), a polyester component (col. 1 line 56), specifically polyethylene terephthalate (col. 17 lines 60-61) in an amount of 20% by weight (Table II, example 1), an impact modifier (abstract), specifically a styrene/butadiene block thermoplastic elastomer copolymer (col. 18 lines 15-20) in an amount of 5% by weight (Table II, example 1), and a multifunctional additive comprising at least one epoxy group (col. 1 lines 59-61), specifically glycidyl methacrylate (col. 18 line 5). Also disclosed is the process of injection molding (col. 17 lines 25-30). The steps of injection molding are well known to a person having ordinary skill in the art at the time of the invention, as evidenced by Avetisian et al. (para. 17). The steps listed by Avetisian et al. as being

well known are (1) starting with a hot material in liquid form/heating a composition to at least the melting point, (2) injecting into a mold having the desired shape of the finished product/injecting under pressure into a mold cavity dimensioned to the length, width, and height of the article, (3) allowing to cool and harden/solidify. While removing the article from the mold is not specifically disclosed in either '154 or Avetisian et al., Official Notice is taken that it is well known in the art to remove an article from the mold at the end of the injection molding process. At the time of the invention a person having ordinary skill in the art would have found it obvious to remove the article from the mold and would have been motivated to do so in order to be able to use the article.

Claim 11 is rejected under 35 U.S.C. 103(a) as being unpatentable over Laughner (U.S. Pat. 5,087,663) when taken with Ding et al. (US 2003/0204019).

Regarding claim 11: '663 teaches an object/article (col. 1 lines 45-50) made of a composition comprising a polycarbonate component/carbonate polymer (abstract), polyester (col. 3 lines 40-50), an impact modifier (col. 3 line 10) and a multifunctional additive with at least one epoxy group, specifically epoxy soybean oil (col. 6 lines 5-12). Also disclosed is the composition used in thermoforming applications (abstract). Not disclosed are the amounts of the components. However, the amounts of components are result effective variables which can be optimized. At the time of the invention a person having ordinary skill in the art would have found it obvious to optimize the polycarbonate and polyester and would have been motivated to do so for such desirable properties as adhesiveness and flexibility. At the time of the invention a person having

ordinary skill in the art would have found it obvious to optimize impact modifier and would have been motivated to do so for such desirable properties as impact resistance.

The steps of thermoforming are well known to a person having ordinary skill in the art at the time of the invention, as evidenced by Ding et al. (para. 104). The steps listed by Ding et al. as being well known are (1) starting with a co-extruded sheet, (2) heating in sheet form to it particular processing temperature/heating to sufficient to soften the sheet, (3) using mechanical or pneumatic means to form against the contours of a template/applying the sheet over a mold dimensioned to the length, width and height of the article. While removing the article from the mold is not specifically disclosed in either '663 or Ding et al., Official Notice is taken that it is well known in the art to remove an article from the mold at the end of the thermoforming molding process. At the time of the invention a person having ordinary skill in the art would have found it obvious to remove the article from the mold and would have been motivated to do so in order to be able to use the article.

Double Patenting

The nonstatutory double patenting rejection is based on a judicially created doctrine grounded in public policy (a policy reflected in the statute) so as to prevent the unjustified or improper timewise extension of the "right to exclude" granted by a patent and to prevent possible harassment by multiple assignees. A nonstatutory obviousness-type double patenting rejection is appropriate where the conflicting claims are not identical, but at least one examined application claim is not patentably distinct from the reference claim(s) because the examined application claim is either anticipated by, or would have been obvious over, the reference claim(s). See, e.g., *In re Berg*, 140 F.3d 1428, 46 USPQ2d 1226 (Fed. Cir. 1998); *In re Goodman*, 11 F.3d 1046, 29 USPQ2d 2010 (Fed. Cir. 1993); *In re Longi*, 759 F.2d 887, 225 USPQ 645 (Fed. Cir. 1985); *In re Van Ornum*, 686 F.2d 937, 214 USPQ 761 (CCPA 1982); *In re Vogel*, 422

F.2d 438, 164 USPQ 619 (CCPA 1970); and *In re Thorington*, 418 F.2d 528, 163 USPQ 644 (CCPA 1969).

A timely filed terminal disclaimer in compliance with 37 CFR 1.321(c) or 1.321(d) may be used to overcome an actual or provisional rejection based on a nonstatutory double patenting ground provided the conflicting application or patent either is shown to be commonly owned with this application, or claims an invention made as a result of activities undertaken within the scope of a joint research agreement.

Effective January 1, 1994, a registered attorney or agent of record may sign a terminal disclaimer. A terminal disclaimer signed by the assignee must fully comply with 37 CFR 3.73(b).

Claim 1 is provisionally rejected on the ground of nonstatutory obviousness-type double patenting as being unpatentable over claims 9-12, 18 and 21 of copending Application No. 11/316,227. Although the conflicting claims are not identical, they are not patentably distinct from each other because all of the claims listed in the copending application claim an article made from the composition of the instant claim 1.

This is a provisional obviousness-type double patenting rejection because the conflicting claims have not in fact been patented.

Correspondence

Any inquiry concerning this communication or earlier communications from the examiner should be directed to Megan Arnberg whose telephone number is (571) 270-3292. The examiner can normally be reached on Monday - Friday 7:30-5:00 EST.

If attempts to reach the examiner by telephone are unsuccessful, the examiner's supervisor, Mark Eashoo can be reached on (571) 272-1197. The fax phone number for the organization where this application or proceeding is assigned is 571-273-8300.

Information regarding the status of an application may be obtained from the Patent Application Information Retrieval (PAIR) system. Status information for published applications may be obtained from either Private PAIR or Public PAIR. Status information for unpublished applications is available through Private PAIR only. For more information about the PAIR system, see http://pair-direct.uspto.gov. Should you have questions on access to the Private PAIR system, contact the Electronic Business Center (EBC) at 866-217-9197 (toll-free). If you would like assistance from a USPTO Customer Service Representative or access to the automated information system, call 800-786-9199 (IN USA OR CANADA) or 571-272-1000.

Megan Arnberg MCA
January 3, 2008

MARK EASHOO, PH.D.
SUPERVISORY PATENT EXAMINER
07/Jan/08

UNITED STATES PATENT AND TRADEMARK OFFICE

Commissioner for Patents
United States Patent and Trademark Office
P.O. Box 1450
Alexandria, VA 22313-1450
www.uspto.gov

SABIC - O8CV - CPP
SABIC Innovative Plastics - IP Legal
ONE PLASTICS AVENUE
PITTSFIELD MA 01201-3697

MAILED

FEB 23 2009

OFFICE OF PETITIONS

In re Application of	:	
Yu, et al.	:	
Application No. 11/419,912	:	DECISION
Filed/Deposited: 23 May, 2006	:	
Attorney Docket No. 214098-1 (P09-0132P)	:	

This is a decision on the petition, filed on 1 August, 2008, to revive under 37 C.F.R. §1.137(b) and alleging abandonment due to unintentional delay.

It is noted that the address on the petition is not that of record (set forth above)—while a copy of the instant decision is being forwarded to the address on the petition as a matter of courtesy, in the absence of the filing of an appropriate Notice of Change of Address or other such paper, all correspondence will be directed to the address of record.

The petition under 37 C.F.R. §1.137(b) is **DISMISSED**.

Any request for reconsideration of this decision must be submitted within TWO (2) MONTHS from the mail date of this decision. Extensions of time under 37 CFR §1.136(a) are permitted. The reconsideration request should include a cover letter entitled "Renewed Petition under 37 CFR §1.137(b)."

This is **not** a final agency action within the meaning of 5 U.S.C. §704.

As to the Allegations
of Unintentional Delay

The requirements of a grantable petition pursuant to 37 C.F.R. §1.137(b) are the petition and fee therefor, a reply, a proper statement and/or showing of unintentional delay under the regulation,

and, where applicable, a terminal disclaimer and fee. (It does not appear that a terminal disclaimer and fee are required here.)

It appears that Petitioner has not satisfied the requirements of the regulation, to wit: The instant petition was filed without a proper reply (*see*: the enclosed copy of the non-final Office action.

BACKGROUND

The record reflects that:

Petitioner failed to reply timely and properly to the non-final Office action mailed on 10 January, 2008, with reply due absent an extension of time on or before 10 April, 2008.

The application went abandoned after midnight 10 April, 2008.

It does not appear that the Office mailed the Notice of Abandonment before the original petition was filed.

On 1 August, 2008, Petitioner submitted a petition pursuant to 37 C.F.R. §1.137(b), with fee, but as of this writing it does not appear that Petitioner has provided a complete and proper reply. While Petitioner has made the statement of unintentional delay, *it is not apparent whether the person signing the statement of unintentional delay was in a position to have firsthand or direct knowledge of the facts and circumstances of the delay at issue. Either any renewed petition must be made by the person under whose control the application went abandoned or Petitioner* ***must*** *make a reasonable inquiry into the facts and circumstances of such delay.*[1] *If such inquiry results in the discovery that it is not correct that the entire delay in filing the required reply from the due date for the reply until the filing of a grantable petition pursuant to 37 C.F.R. §1.137(b) was unintentional, Petitioner* ***must*** *notify the Office.*

In regard to these deficiencies, Petitioner's attention is drawn also to the guidance in the Commentary at MPEP §711.03(c)(II) (see: http://www.uspto.gov/web/offices/pac/mpep/documents/0700_711_03_c.htm#sect711.03c).

The Office mailed the Notice of Abandonment on 21 June, 2007.

---

[1] See 37 C.F.R. §10.18(b) and Changes to Patent Practice and Procedure; Final Rule Notice, 62 Fed. Reg. 53131, 53178 (October 10, 1997), 1203 Off. Gaz. Pat. Office 63, 103 (October 21, 1997).

The availability of applications and application papers online to applicants/practitioners who diligently associate their Customer Number with the respective application(s) now provides an applicant/practitioner on-demand information as to events/transactions in an application. Thus, now if one wishes to know the progress in and/or status of an application or the accuracy of the data therein, one need only look at the file online.

Out of an abundance of caution, Petitioners always are reminded that those registered to practice *and* all others who make representations before the Office must inquire into the underlying facts of representations made to the Office and support averments with the appropriate documentation–since all owe to the Office the continuing duty to disclose.[2]

STATUTES, REGULATIONS

Congress has authorized the Commissioner to "revive an application if the delay is shown to the satisfaction of the Commissioner to have been "unavoidable." 35 U.S.C. §133 (1994).

The regulations at 37 C.F.R. §1.137(a) and (b) set forth the requirements for a Petitioner to revive a previously unavoidably or unintentionally, respectively, abandoned application.[3],[4]

As to Satisfaction of Requirements under the Rule

As indicated above, the requirements of a grantable petition pursuant to 37 C.F.R. §1.137(b) are the petition and fee therefor, a proper reply, a proper statement and/or showing of unintentional delay under the regulation, and, where applicable, a terminal disclaimer and fee.

It does not appear that Petitioner has satisfied the reply requirement under the rule.

---

[2] See supplement of 17 June, 1999. The Patent and Trademark Office is relying on petitioner's duty of candor and good faith and accepting a statement made by Petitioner. See Changes to Patent Practice and Procedure, 62 Fed. Reg. at 53160 and 53178, 1203 Off. Gaz. Pat. Office at 88 and 103 (responses to comments 64 and 109)(applicant obligated under 37 C.F.R. §10.18 to inquire into the underlying facts and circumstances when providing statements to the Patent and Trademark Office). See specifically, the regulations at 37 C.F.R. §10.18.

[3] See: Changes to Patent Practice and Procedure; Final Rule Notice, 62 Fed. Reg. at 53158-59 (October 10, 1997), 1203 Off. Gaz. Pat. Office at 86-87 (October 21, 1997).

[4] The language of 35 U.S.C. §133 and 37 C.F.R. §1.137(a) is clear, unambiguous, and without qualification: the delay in tendering the reply to the outstanding Office action, as well as filing the first petition seeking revival, must have been unavoidable for the reply now to be accepted on petition. (Therefore, by example, an unavoidable delay in the payment of the Filing Fee might occur if a reply is shipped by the US Postal Service, but due to catastrophic accident, the delivery is not made.) Delays in responding properly raise the question whether delays are unavoidable. Where there is a question whether the delay was unavoidable, Petitioners must meet the burden of establishing that the delay was unavoidable within the meaning of 35 U.S.C. §133 and 37 C.F.R. §1.137(a) And the Petitioner must be diligent in attending to the matter. Failure to do so does not constitute the care required under Pratt, and so cannot satisfy the test for diligence and due care. (By contrast, unintentional delays are those that do not satisfy the very strict statutory and regulatory requirements of unavoidable delay, and also, by definition, are not intentional.))

CONCLUSION

The instant petition under 37 C.F.R. §1.137(b) is **dismissed**.

Further correspondence with respect to this matter should be addressed as follows:

By Mail: Mail Stop PETITION
Commissioner for Patents
P. O. Box 1450
Alexandria, VA 22313-1450

By hand: U. S. Patent and Trademark Office
Customer Service Window, Mail Stop Petitions
Randolph Building
401 Dulany Street
Alexandria, VA 22314

The centralized facsimile number is **(571) 273-8300.**

Telephone inquiries regarding this decision may be directed to the undersigned at (571) 272-3214—it is noted, however, that all practice before the Office is in writing (see: 37 C.F.R. §1.2[5]) and the proper authority for action on any matter in this regard are the statutes (35 U.S.C.), regulations (37 C.F.R.) and the commentary on policy (MPEP). Therefore, no telephone discussion may be controlling or considered authority for Petitioner's action(s).

/John J. Gillon, Jr./
John J. Gillon, Jr.
Senior Attorney
Office of Petitions

cc:
LEAH M. REIMER, PHD.
CANTOR COLBURN, LLP
20 CHURCH STREET
22ND FLOOR
HARTFORD, CT 06103

[5] The regulations at 37 C.F.R. §1.2 provide:
§1.2 Business to be transacted in writing.
All business with the Patent and Trademark Office should be transacted in writing. The personal attendance of applicants or their attorneys or agents at the Patent and Trademark Office is unnecessary. The action of the Patent and Trademark Office will be based exclusively on the written record in the Office. No attention will be paid to any alleged oral promise, stipulation, or understanding in relation to which there is disagreement or doubt.

UNITED STATES PATENT AND TRADEMARK OFFICE

Commissioner for Patents
United States Patent and Trademark Office
P.O. Box 1450
Alexandria, VA 22313-1450
www.uspto.gov

SABIC - O8CV - CPP
SABIC Innovative Plastics - IP Legal
ONE PLASTICS AVENUE
PITTSFIELD MA 01201-3697

COPY MAILED
JUN 16 2009
OFFICE OF PETITIONS

In re Application of	:	
Yu, et al.	:	
Application No. 11/419,912	:	DECISION
Filed/Deposited: 23 May, 2006	:	
Attorney Docket No. 214098-1 (P09-0132P)	:	

This is a decision on the petition, filed on 21 May, 2009, to revive under 37 C.F.R. §1.137(b) and alleging abandonment due to unintentional delay.

It is noted that the address on the petition is not that of record (set forth above)—while a copy of the instant decision is being forwarded to the address on the petition as a matter of courtesy, in the absence of the filing of an appropriate Notice of Change of Address or other such paper, all correspondence will be directed to the address of record.

The petition as considered under 37 C.F.R. §1.137(b) is **GRANTED**.

As to Allegations of
Unintentional Delay

The requirements of a grantable petition pursuant to 37 C.F.R. §1.137(b) are the petition and fee therefor, a reply, a proper statement of unintentional delay under the regulation, and, where applicable, a terminal disclaimer and fee. (However, it does not appear that a terminal disclaimer and fee are due here.)

BACKGROUND

The record reflects that:

Petitioner failed to reply timely and properly to the non-final Office action mailed on 10 January, 2008, with reply due absent an extension of time on or before 10 April, 2008.

The application went abandoned after midnight 10 April, 2008.

It does not appear that the Office mailed the Notice of Abandonment before a petition was filed.

On 1 August, 2008, Petitioner submitted a petition pursuant to 37 C.F.R. §1.137(b), with fee, but with no indication that Petitioner provided a complete and proper reply. Moreover, it was not apparent whether the person signing the statement of unintentional delay was in a position to have firsthand or direct knowledge of the facts and circumstances of the delay at issue. Petitioner was directed to the guidance in the Commentary at MPEP §711.03(c)(II), and the petition was dismissed on 24 February, 2009

In the interim, the Office mailed the Notice of Abandonment on 7 August, 2008.

On 21 May, 2009, Petitioner submitted a petition pursuant to 37 C.F.R. §1.137(b), with fee previously paid, with a statement and an explanation of the unintentional delay and a statement that the reply was in the form of the continuation Application No. 12/170,636—so satisfying the regulatory requirements consistent with the guidance in the Commentary at MPEP §711.03(c)(II).

The availability of applications and application papers online to applicants/practitioners who diligently associate their Customer Number with the respective application(s) now provides an applicant/practitioner on-demand information as to events/transactions in an application.

Out of an abundance of caution, Petitioners always are reminded that those registered to practice and all others who make representations before the Office **must** inquire into the underlying facts of representations made to the Office and support averments with the appropriate documentation–since all owe to the Office the continuing duty to disclose.[1]

STATUTES, REGULATIONS AND ANALYSIS

Congress has authorized the Commissioner to "revive an application if the delay is shown to the satisfaction of the Commissioner to have been "unavoidable." 35 U.S.C. §133 (1994).[2]

---

[1] See supplement of 17 June, 1999. The Patent and Trademark Office is relying on petitioner's duty of candor and good faith and accepting a statement made by Petitioner. See Changes to Patent Practice and Procedure, 62 Fed. Reg. at 53160 and 53178, 1203 Off. Gaz. Pat. Office at 88 and 103 (responses to comments 64 and 109)(applicant obligated under 37 C.F.R. §10.18 to inquire into the underlying facts and circumstances when providing statements to the Patent and Trademark Office).

[2] 35 U.S.C. §133 provides:

35 U.S.C. §133 Time for prosecuting application.

Upon failure of the applicant to prosecute the application within six months after any action therein, of which notice has been given or mailed to the applicant, or within such shorter time, not less than thirty days, as fixed by the Commissioner in such action, the application shall be regarded as abandoned by the parties thereto, unless it be shown to the satisfaction of the Commissioner that such delay was unavoidable.

The regulations at 37 C.F.R. §1.137(a) and (b) set forth the requirements for a Petitioner to revive a previously unavoidably or unintentionally, respectively, abandoned application under this congressional grant of authority.

Unintentional delays are those that do not satisfy the very strict statutory and regulatory requirements of unavoidable delay, and also, by definition, are not intentional.[3]))

As to Allegations of
Unintentional Delay

It appears that the requirements under 37 C.F.R. §1.137(b) have been satisfied.

CONCLUSION

Accordingly, the petition under 37 C.F.R. §1.137(b) is **granted**.

This application is being revived solely for purposes of continuity. As continuity has been established by this decision, the application is again abandoned in favor of continuing Application No. 12/170,636.

The instant application is released to the Technology Center/AU 1796 for such processing as required in the matter of continuity.

Petitioner may find it beneficial to view Private PAIR within a fortnight of the instant decision to ensure that the revival has been acknowledged by the TC/AU in response to this decision. It is noted that all inquiries with regard to that change in status need be directed to the TC/AU where that change of status must be effected—that does not occur in the Office of Petitions.

[3] Therefore, by example, an unintentional delay in the reply might occur if the reply and transmittal form are to be prepared for shipment by the US Postal Service, but other pressing matters distract one's attention and the mail is not timely deposited for shipment.

Telephone inquiries regarding this decision may be directed to the undersigned at (571) 272-3214—it is noted, however, that all practice before the Office is in writing (see: 37 C.F.R. §1.2[4]) and the proper authority for action on any matter in this regard are the statutes (35 U.S.C.), regulations (37 C.F.R.) and the commentary on policy (MPEP). Therefore, no telephone discussion may be controlling or considered authority for Petitioner's action(s).

/John J. Gillon, Jr./
John J. Gillon, Jr.
Senior Attorney
Office of Petitions

cc:
LEAH M. REIMER, PHD.
CANTOR COLBURN, LLP
20 CHURCH STREET
22ND FLOOR
HARTFORD, CT 06103

[4] The regulations at 37 C.F.R. §1.2 provide:
§1.2 Business to be transacted in writing.
All business with the Patent and Trademark Office should be transacted in writing. The personal attendance of applicants or their attorneys or agents at the Patent and Trademark Office is unnecessary. The action of the Patent and Trademark Office will be based exclusively on the written record in the Office. No attention will be paid to any alleged oral promise, stipulation, or understanding in relation to which there is disagreement or doubt.

UNITED STATES PATENT AND TRADEMARK OFFICE

UNITED STATES DEPARTMENT OF COMMERCE
United States Patent and Trademark Office
Address: COMMISSIONER FOR PATENTS
P.O. Box 1450
Alexandria, Virginia 22313-1450
www.uspto.gov

INTELLECTUAL PROPERTY MANAGEMENT
BOEING MANAGEMENT COMPANY
P.O. BOX 2515
MAIL CODE 110-SD54
SEAL BEACH, CA 90740-1515

Mail Date: 04/20/2010

Applicant	: Bruce J. Lord	: DECISION ON REQUEST FOR
Patent Number	: 7583641	: RECALCULATION of PATENT
Issue Date	: 09/01/2009	: TERM ADJUSTMENT IN VIEW
Appliction No	: 11/419,926	: OF WYETH AND NOTICE OF INTENT TO
Filed	: 05/23/2006	: ISSUE CERTIFICATE OF CORRECTION
		:

The Request for Recalculation is **GRANTED** to the extent indicated.

The patent term adjustment has been determined to be **692** days. The USPTO will *sua sponte* issue a certificate of correction reflecting the amount of PTA days determined by the recalculation.

Prior to the issuance of the certificate of correction, the USPTO will afford patentee an opportunity to be heard and request reconsideration. Accordingly, patentee has **one month or thirty (30) days**, whichever is longer, to file a request for reconsideration of this patent term adjustment calculation. See 35 U.S.C. 154(b)(3)(B)(ii) and 37 CFR 1.322(a)(4). No extensions of time will be granted under 37 CFR 1.136.

Patentee should use document code PET.OP if electronically filing a request for reconsideration of this patent term adjustment calculation. The patentee must also include the information required by 37 CFR 1.705(b)(2) and the fee required by 37 CFR 1.18(e). If patentee does not file a timely request for reconsideration of this patent term adjustment calculation including the information required by 37 CFR 1.705(b)(2) and the fee required by 37 CFR 1.18(e), the USPTO will issue a certificate of correction reflecting the PTA determination noted above.

Patentee should be aware that in order to preserve the right to review in the United States District Court for the District of Columbia of the USPTO patent term adjustment determination, patentee must ensure that he or she also take the steps required under 35 U.S.C. 154(b)(4)(A) in a timely manner. Nothing in the request for recalculation should be construed as providing an alternative time frame for commencing a civil action under 35 U.S.C. 154(b)(4)(A).

Any questions concerning this decision should be directed to the Office of Patent Legal Administration at 571-272-7702.

UNITED STATES PATENT AND TRADEMARK OFFICE

COMMISSIONER FOR PATENTS
UNITED STATES PATENT AND TRADEMARK OFFICE
P.O. BOX 1450
ALEXANDRIA, VA 22313-1450
www.uspto.gov

FISH & RICHARDSON P.C.
P.O. BOX 1022
MINNEAPOLIS MN 55440-1022

COPY MAILED

MAY 25 2007

OFFICE OF PETITIONS

In re Application of	:	
LEVEILLE et al.	:	DECISION ON PETITION
Application No. 11/419,936	:	
Filed: May 23, 2006	:	
Attorney Docket No. 06234-038001	:	

This is a decision on the "PETITION UNDER 37 CFR 1.57(A) TO GRANT FILING DATE," filed November 21, 2006, requesting the application be accorded a filing date of May 23, 2006, with Figure 14 as part of the original disclosure.

BACKGROUND

On May 23, 2006, applicants filed the above-identified application. The application as filed included 22 drawings sheets, containing Figures 1 to 13 and 15 to 24. Applicants acknowledge that they inadvertently omitted Figure 14 from the application, as filed on May 23, 2006.

On September 25, 2006, the Office mailed a Notice of Omitted Item(s) in a Nonprovisional Application, indicating that the application had been accorded a filing date but that Figure 14 described in the specification appeared to have been omitted. On November 21, 2006, applicants filed the present petition, 23 drawing sheets (including omitted Figure 14), a preliminary amendment, and an executed declaration.

Applicants acknowledge that Figure 14 was not filed because of an oversight when the application was filed using the electronic filing system. Applicants assert that the present application claims the benefit of U.S. Provisional Application No. 60/683,801, filed May 24, 2005. Applicants contend that inadvertently omitted Figure 14 is completely contained in the provisional application and is incorporated by reference.

Applicants aver that Figure 14 is structurally identical to Figure 13 of the provisional application.

OPINION

Pursuant to MPEP 206.01(c)(IV),

> An applicant may incorporate by reference the prior application by including, in the continuation or divisional application-as-filed, an explicit statement that such specifically enumerated prior application or applications are "hereby incorporated by reference." The statement must appear in the specification. See 37 CFR 1.57(b) and MPEP § 608.01(p). The inclusion of this incorporation by reference statement will permit an applicant to amend the continuation or divisional application to include subject matter from the prior application(s), without the need for a petition provided the continuation or divisional application is entitled to a filing date notwithstanding the incorporation by reference.

A review of the record indicates that the above-identified application as originally filed on May 23, 2006, which was entitled to a filing date, included an explicit incorporation by reference statement in the specification. As applicants included an incorporation by reference statement in the specification, applicants are permitted to file an amendment with the examiner, prior to the first action on the merits, to include Figure 14, **without the need for a petition**.

CONCLUSION

As applicants admit that Figure 14 was not present on filing, the Office correctly mailed the Notice of Omitted Item(s). The petition is **DISMISSED** to the extent that it requests that the application be accorded a filing date of May 23, 2006, with Figure 14 as part of the original disclosure. As the filing of the present petition was not necessitated by the Office, and in view of the fact that no petition is necessary pursuant to MPEP 206.01(c)(IV), the petition fee will not be refunded.

The Office acknowledges receipt of the preliminary amendment filed on November 21, 2006, requesting entry of Figure 14. The amendment will be forwarded to the examiner for review.

The Office of Initial Patent Examination (OIPE) has been advised of this decision. The application is, thereby, forwarded to OIPE for further processing with a filing date of **May 23, 2006,** using the application papers received in the Office on that date. Figure 14 will not be entered at this time.

Thereafter, this matter will be referred to Technology Center Art Unit 2186 for review of the preliminary amendment filed on November 21, 2006.

Telephone inquiries related to this decision should be directed to Christina Tartera Donnell, Senior Petitions Attorney at 571-272-3211.

Charles Pearson
Director
Office of Petitions

UNITED STATES PATENT AND TRADEMARK OFFICE

Commissioner for Patents
United States Patent and Trademark Office
P.O. Box 1450
Alexandria, VA 22313-1450
www.uspto.gov

WINSTEAD PC
P.O. BOX 50784
DALLAS TX, 75201

COPY MAILED
FEB 12 2010

In re Application of	:
Justin G. Banks	:
Application No. 11/419,958	: DECISION GRANTING PETITION
Filed: May 23, 2006	: UNDER 37 CFR 1.78(a)(3) AND
Attorney Docket No. 50439-P001US	: UNDER 37 CFR 1.78(a)(6)

This is a decision on the petitions under 37 CFR §§ 1.78(a)(3) and 1.78(a)(6), filed October 28, 2009, to accept an unintentionally delayed claim under 35 U.S.C. §§120 and 119(e) for the benefit of the prior-filed applications set forth in the concurrently filed amendment.

The petitions are **GRANTED**.

A petition for acceptance of a claim for late priority under 37 CFR §§ 1.78(a)(3) and 1.78(a)(6) is only applicable to those applications filed on or after November 29, 2000. Further, the petition is appropriate only after the expiration of the period specified in 37 CFR §§ 1.78(a)(2)(ii) and 1.78(a)(5)(ii). In addition, the petition under 37 CFR §§ 1.78(a)(3) and 1.78(a)(6) must be accompanied by:

(1) the reference required by 35 U.S.C. §§ 120 and 119(e) and 37 CFR §§ 1.78(a)(2)(i) and 1.78(a)(5)(i) of the prior-filed application, unless previously submitted;
(2) the surcharge set forth in § 1.17(t); and
(3) a statement that the entire delay between the date the claim was due under 37 CFR §§ 1.78(a)(2)(ii) and 1.78(a)(5)(ii) and the date the claim was filed was unintentional. The Commissioner may require additional where there is a question whether the delay was unintentional.

The instant application was filed on May 23, 2006 and was pending at the time of filing of the instant petition. A reference to the prior-filed applications has been included in an amendment to the first sentence of the specification following the title, as required by 37 CFR §§ 1.78(a)(2)(iii) and 1.78(a)(5)(iii).

Additionally, intermediate nonprovisional application 10/980,875 was filed within twelve months of provisional Application No. 60/571,253, which was filed on November 4, 2003, for which priority is claimed.

The instant nonprovisional application was filed after November 29, 2000, and the claim for priority herein is submitted after expiration of the period specified in 37 CFR §§ 1.78(a)(2)(ii) and 1.78(a)(5)(ii). *See* 35 U.S.C. §§ 120 and § 119(e). Accordingly, having found that the

instant petition satisfies the conditions of 37 CFR §§ 1.78(a)(3) and 1.78(a)(6) for acceptance of an unintentionally delayed claim for priority under 35 U.S.C. §§ 120 and § 119(e), the petition to accept an unintentionally delayed claim of benefit to the prior-filed applications is granted.

The granting of the petition to accept the delayed benefit claim to the prior-filed applications under 37 CFR §§ 1.78(a)(3) and 1.78(a)(6) should not be construed as meaning that the instant application is entitled to the benefit of the filing date of the prior-filed applications. In order for the instant application to be entitled to the benefit of the prior-filed applications, all other requirements under 35 U.S.C. §120 and 1.78(a)(1) and (a)(2) and under 35 U.S.C. §119(e) and 37 CFR 1.78(a)(4) and (a)(5) must be met. Similarly, the fact that the corrected Filing Receipt accompanying this decision on petition includes the prior-filed applications should not be construed as meaning that applicant is entitled to the claim for benefit of priority to the prior-filed applications noted thereon. Accordingly, the examiner will, in due course, consider this benefit claim and determine whether the instant application is entitled to the benefit of the earlier filing date.

A corrected Filing Receipt, which includes the priority claim to the prior-filed applications, accompanies this decision on petition.

Any questions concerning this matter may be directed to Petitions Examiner Alicia Kelley at (571) 272-6059.

This matter is being referred to Technology Center Art Unit 2186 for appropriate action on the amendment submitted October 28, 2009, including consideration by the examiner of the claim under 35 U.S.C. § §120 and 37 CFR 1.78(a)(2) for the benefit of the prior-filed applications, and for consideration of the claim under 35 U.S.C. §119(e) and 37 CFR 1.78(a)(5) for the benefit of the prior-filed provisional application.

/Liana Walsh/
Liana Walsh
Petitions Examiner
Office of Petitions

ATTACHMENT: Corrected Filing Receipt

UNITED STATES PATENT AND TRADEMARK OFFICE

UNITED STATES DEPARTMENT OF COMMERCE
United States Patent and Trademark Office
Address: COMMISSIONER FOR PATENTS
PO Box 1450
Alexandria, Virginia 22313-1450
www.uspto.gov

APPLICATION NUMBER	FILING or 371(c) DATE	GRP ART UNIT	FIL FEE REC'D	ATTY.DOCKET.NO	TOT CLAIMS	IND CLAIMS
11/419,958	05/23/2006	2186	1130	50439-P001US	19	3

CONFIRMATION NO. 1231

CORRECTED FILING RECEIPT

61060
WINSTEAD PC
P.O. BOX 50784
DALLAS, TX 75201

OC000000040056968

Date Mailed: 02/05/2010

Receipt is acknowledged of this non-provisional patent application. The application will be taken up for examination in due course. Applicant will be notified as to the results of the examination. Any correspondence concerning the application must include the following identification information: the U.S. APPLICATION NUMBER, FILING DATE, NAME OF APPLICANT, and TITLE OF INVENTION. Fees transmitted by check or draft are subject to collection. Please verify the accuracy of the data presented on this receipt. **If an error is noted on this Filing Receipt, please submit a written request for a Filing Receipt Correction. Please provide a copy of this Filing Receipt with the changes noted thereon. If you received a "Notice to File Missing Parts" for this application, please submit any corrections to this Filing Receipt with your reply to the Notice. When the USPTO processes the reply to the Notice, the USPTO will generate another Filing Receipt incorporating the requested corrections**

Applicant(s)

Justin G. Banks, Salt Lake City, UT;

Power of Attorney: The patent practitioners associated with Customer Number 61060

Domestic Priority data as claimed by applicant

This appln claims benefit of 60/683,765 05/24/2005
and is a CIP of 10/980,875 11/03/2004
which claims benefit of 60/517,253 11/04/2003

Foreign Applications

If Required, Foreign Filing License Granted: 06/01/2006

The country code and number of your priority application, to be used for filing abroad under the Paris Convention, is **US 11/419,958**

Projected Publication Date: Not Applicable

Non-Publication Request: No

Early Publication Request: No

Title

Data replication from one-to-one or one-to-many heterogeneous devices

Preliminary Class

711

PROTECTING YOUR INVENTION OUTSIDE THE UNITED STATES

Since the rights granted by a U.S. patent extend only throughout the territory of the United States and have no effect in a foreign country, an inventor who wishes patent protection in another country must apply for a patent in a specific country or in regional patent offices. Applicants may wish to consider the filing of an international application under the Patent Cooperation Treaty (PCT). An international (PCT) application generally has the same effect as a regular national patent application in each PCT-member country. The PCT process **simplifies** the filing of patent applications on the same invention in member countries, but **does not result** in a grant of "an international patent" and does not eliminate the need of applicants to file additional documents and fees in countries where patent protection is desired.

Almost every country has its own patent law, and a person desiring a patent in a particular country must make an application for patent in that country in accordance with its particular laws. Since the laws of many countries differ in various respects from the patent law of the United States, applicants are advised to seek guidance from specific foreign countries to ensure that patent rights are not lost prematurely.

Applicants also are advised that in the case of inventions made in the United States, the Director of the USPTO must issue a license before applicants can apply for a patent in a foreign country. The filing of a U.S. patent application serves as a request for a foreign filing license. The application's filing receipt contains further information and guidance as to the status of applicant's license for foreign filing.

Applicants may wish to consult the USPTO booklet, "General Information Concerning Patents" (specifically, the section entitled "Treaties and Foreign Patents") for more information on timeframes and deadlines for filing foreign patent applications. The guide is available either by contacting the USPTO Contact Center at 800-786-9199, or it can be viewed on the USPTO website at http://www.uspto.gov/web/offices/pac/doc/general/index.html.

For information on preventing theft of your intellectual property (patents, trademarks and copyrights), you may wish to consult the U.S. Government website, http://www.stopfakes.gov. Part of a Department of Commerce initiative, this website includes self-help "toolkits" giving innovators guidance on how to protect intellectual property in specific countries such as China, Korea and Mexico. For questions regarding patent enforcement issues, applicants may call the U.S. Government hotline at 1-866-999-HALT (1-866-999-4158).

LICENSE FOR FOREIGN FILING UNDER

Title 35, United States Code, Section 184

Title 37, Code of Federal Regulations, 5.11 & 5.15

GRANTED

The applicant has been granted a license under 35 U.S.C. 184, if the phrase "IF REQUIRED, FOREIGN FILING LICENSE GRANTED" followed by a date appears on this form. Such licenses are issued in all applications where the conditions for issuance of a license have been met, regardless of whether or not a license may be required as

set forth in 37 CFR 5.15. The scope and limitations of this license are set forth in 37 CFR 5.15(a) unless an earlier license has been issued under 37 CFR 5.15(b). The license is subject to revocation upon written notification. The date indicated is the effective date of the license, unless an earlier license of similar scope has been granted under 37 CFR 5.13 or 5.14.

This license is to be retained by the licensee and may be used at any time on or after the effective date thereof unless it is revoked. This license is automatically transferred to any related applications(s) filed under 37 CFR 1.53(d). This license is not retroactive.

The grant of a license does not in any way lessen the responsibility of a licensee for the security of the subject matter as imposed by any Government contract or the provisions of existing laws relating to espionage and the national security or the export of technical data. Licensees should apprise themselves of current regulations especially with respect to certain countries, of other agencies, particularly the Office of Defense Trade Controls, Department of State (with respect to Arms, Munitions and Implements of War (22 CFR 121-128)); the Bureau of Industry and Security, Department of Commerce (15 CFR parts 730-774); the Office of Foreign AssetsControl, Department of Treasury (31 CFR Parts 500+) and the Department of Energy.

NOT GRANTED

No license under 35 U.S.C. 184 has been granted at this time, if the phrase "IF REQUIRED, FOREIGN FILING LICENSE GRANTED" DOES NOT appear on this form. Applicant may still petition for a license under 37 CFR 5.12, if a license is desired before the expiration of 6 months from the filing date of the application. If 6 months has lapsed from the filing date of this application and the licensee has not received any indication of a secrecy order under 35 U.S.C. 181, the licensee may foreign file the application pursuant to 37 CFR 5.15(b).

UNITED STATES PATENT AND TRADEMARK OFFICE

Commissioner for Patents
United States Patent and Trademark Office
P.O. Box 1450
Alexandria, VA 22313-1450
www.uspto.gov

WINSTEAD PC
P.O. BOX 50784
DALLAS TX, 75201

COPY MAILED
FEB 12 2010

In re Application of	:
Justin G. Banks	:
Application No. 11/419,958	: DECISION GRANTING PETITION
Filed: May 23, 2006	: UNDER 37 CFR 1.78(a)(3) AND
Attorney Docket No. 50439-P001US	: UNDER 37 CFR 1.78(a)(6)

This is a decision on the petitions under 37 CFR §§ 1.78(a)(3) and 1.78(a)(6), filed October 28, 2009, to accept an unintentionally delayed claim under 35 U.S.C. §§120 and 119(e) for the benefit of the prior-filed applications set forth in the concurrently filed amendment.

The petitions are **GRANTED**.

A petition for acceptance of a claim for late priority under 37 CFR §§ 1.78(a)(3) and 1.78(a)(6) is only applicable to those applications filed on or after November 29, 2000. Further, the petition is appropriate only after the expiration of the period specified in 37 CFR §§ 1.78(a)(2)(ii) and 1.78(a)(5)(ii). In addition, the petition under 37 CFR §§ 1.78(a)(3) and 1.78(a)(6) must be accompanied by:

(1) the reference required by 35 U.S.C. §§ 120 and 119(e) and 37 CFR §§ 1.78(a)(2)(i) and 1.78(a)(5)(i) of the prior-filed application, unless previously submitted;
(2) the surcharge set forth in § 1.17(t); and
(3) a statement that the entire delay between the date the claim was due under 37 CFR §§ 1.78(a)(2)(ii) and 1.78(a)(5)(ii) and the date the claim was filed was unintentional. The Commissioner may require additional where there is a question whether the delay was unintentional.

The instant application was filed on May 23, 2006 and was pending at the time of filing of the instant petition. A reference to the prior-filed applications has been included in an amendment to the first sentence of the specification following the title, as required by 37 CFR §§ 1.78(a)(2)(iii) and 1.78(a)(5)(iii).

Additionally, intermediate nonprovisional application 10/980,875 was filed within twelve months of provisional Application No. 60/571,253, which was filed on November 4, 2003, for which priority is claimed.

The instant nonprovisional application was filed after November 29, 2000, and the claim for priority herein is submitted after expiration of the period specified in 37 CFR §§ 1.78(a)(2)(ii) and 1.78(a)(5)(ii). *See* 35 U.S.C. §§ 120 and § 119(e). Accordingly, having found that the

instant petition satisfies the conditions of 37 CFR §§ 1.78(a)(3) and 1.78(a)(6) for acceptance of an unintentionally delayed claim for priority under 35 U.S.C. §§ 120 and § 119(e), the petition to accept an unintentionally delayed claim of benefit to the prior-filed applications is granted.

The granting of the petition to accept the delayed benefit claim to the prior-filed applications under 37 CFR §§ 1.78(a)(3) and 1.78(a)(6) should not be construed as meaning that the instant application is entitled to the benefit of the filing date of the prior-filed applications. In order for the instant application to be entitled to the benefit of the prior-filed applications, all other requirements under 35 U.S.C. §120 and 1.78(a)(1) and (a)(2) and under 35 U.S.C. §119(e) and 37 CFR 1.78(a)(4) and (a)(5) must be met. Similarly, the fact that the corrected Filing Receipt accompanying this decision on petition includes the prior-filed applications should not be construed as meaning that applicant is entitled to the claim for benefit of priority to the prior-filed applications noted thereon. Accordingly, the examiner will, in due course, consider this benefit claim and determine whether the instant application is entitled to the benefit of the earlier filing date.

A corrected Filing Receipt, which includes the priority claim to the prior-filed applications, accompanies this decision on petition.

Any questions concerning this matter may be directed to Petitions Examiner Alicia Kelley at (571) 272-6059.

This matter is being referred to Technology Center Art Unit 2186 for appropriate action on the amendment submitted October 28, 2009, including consideration by the examiner of the claim under 35 U.S.C. § §120 and 37 CFR 1.78(a)(2) for the benefit of the prior-filed applications, and for consideration of the claim under 35 U.S.C. §119(e) and 37 CFR 1.78(a)(5) for the benefit of the prior-filed provisional application.

/Liana Walsh/
Liana Walsh
Petitions Examiner
Office of Petitions

ATTACHMENT: Corrected Filing Receipt

UNITED STATES PATENT AND TRADEMARK OFFICE

UNITED STATES DEPARTMENT OF COMMERCE
United States Patent and Trademark Office
Address: COMMISSIONER FOR PATENTS
P.O. Box 1450
Alexandria, Virginia 22313-1450
www.uspto.gov

APPLICATION NUMBER	FILING or 371(c) DATE	GRP ART UNIT	FIL FEE REC'D	ATTY.DOCKET.NO	TOT CLAIMS	IND CLAIMS
11/419,958	05/23/2006	2186	1130	50439-P001US	19	3

CONFIRMATION NO. 1231

CORRECTED FILING RECEIPT

61060
WINSTEAD PC
P.O. BOX 50784
DALLAS, TX 75201

OC000000040056968

Date Mailed: 02/05/2010

Receipt is acknowledged of this non-provisional patent application. The application will be taken up for examination in due course. Applicant will be notified as to the results of the examination. Any correspondence concerning the application must include the following identification information: the U.S. APPLICATION NUMBER, FILING DATE, NAME OF APPLICANT, and TITLE OF INVENTION. Fees transmitted by check or draft are subject to collection. Please verify the accuracy of the data presented on this receipt. **If an error is noted on this Filing Receipt, please submit a written request for a Filing Receipt Correction. Please provide a copy of this Filing Receipt with the changes noted thereon. If you received a "Notice to File Missing Parts" for this application, please submit any corrections to this Filing Receipt with your reply to the Notice. When the USPTO processes the reply to the Notice, the USPTO will generate another Filing Receipt incorporating the requested corrections**

Applicant(s)

Justin G. Banks, Salt Lake City, UT;

Power of Attorney: The patent practitioners associated with Customer Number 61060

Domestic Priority data as claimed by applicant

This appln claims benefit of 60/683,765 05/24/2005
and is a CIP of 10/980,875 11/03/2004
which claims benefit of 60/517,253 11/04/2003

Foreign Applications

If Required, Foreign Filing License Granted: 06/01/2006

The country code and number of your priority application, to be used for filing abroad under the Paris Convention, is **US 11/419,958**

Projected Publication Date: Not Applicable

Non-Publication Request: No

Early Publication Request: No

Title

Data replication from one-to-one or one-to-many heterogeneous devices

Preliminary Class

711

PROTECTING YOUR INVENTION OUTSIDE THE UNITED STATES

Since the rights granted by a U.S. patent extend only throughout the territory of the United States and have no effect in a foreign country, an inventor who wishes patent protection in another country must apply for a patent in a specific country or in regional patent offices. Applicants may wish to consider the filing of an international application under the Patent Cooperation Treaty (PCT). An international (PCT) application generally has the same effect as a regular national patent application in each PCT-member country. The PCT process **simplifies** the filing of patent applications on the same invention in member countries, but **does not result** in a grant of "an international patent" and does not eliminate the need of applicants to file additional documents and fees in countries where patent protection is desired.

Almost every country has its own patent law, and a person desiring a patent in a particular country must make an application for patent in that country in accordance with its particular laws. Since the laws of many countries differ in various respects from the patent law of the United States, applicants are advised to seek guidance from specific foreign countries to ensure that patent rights are not lost prematurely.

Applicants also are advised that in the case of inventions made in the United States, the Director of the USPTO must issue a license before applicants can apply for a patent in a foreign country. The filing of a U.S. patent application serves as a request for a foreign filing license. The application's filing receipt contains further information and guidance as to the status of applicant's license for foreign filing.

Applicants may wish to consult the USPTO booklet, "General Information Concerning Patents" (specifically, the section entitled "Treaties and Foreign Patents") for more information on timeframes and deadlines for filing foreign patent applications. The guide is available either by contacting the USPTO Contact Center at 800-786-9199, or it can be viewed on the USPTO website at http://www.uspto.gov/web/offices/pac/doc/general/index.html.

For information on preventing theft of your intellectual property (patents, trademarks and copyrights), you may wish to consult the U.S. Government website, http://www.stopfakes.gov. Part of a Department of Commerce initiative, this website includes self-help "toolkits" giving innovators guidance on how to protect intellectual property in specific countries such as China, Korea and Mexico. For questions regarding patent enforcement issues, applicants may call the U.S. Government hotline at 1-866-999-HALT (1-866-999-4158).

LICENSE FOR FOREIGN FILING UNDER

Title 35, United States Code, Section 184

Title 37, Code of Federal Regulations, 5.11 & 5.15

GRANTED

The applicant has been granted a license under 35 U.S.C. 184, if the phrase "IF REQUIRED, FOREIGN FILING LICENSE GRANTED" followed by a date appears on this form. Such licenses are issued in all applications where the conditions for issuance of a license have been met, regardless of whether or not a license may be required as

set forth in 37 CFR 5.15. The scope and limitations of this license are set forth in 37 CFR 5.15(a) unless an earlier license has been issued under 37 CFR 5.15(b). The license is subject to revocation upon written notification. The date indicated is the effective date of the license, unless an earlier license of similar scope has been granted under 37 CFR 5.13 or 5.14.

This license is to be retained by the licensee and may be used at any time on or after the effective date thereof unless it is revoked. This license is automatically transferred to any related applications(s) filed under 37 CFR 1.53(d). This license is not retroactive.

The grant of a license does not in any way lessen the responsibility of a licensee for the security of the subject matter as imposed by any Government contract or the provisions of existing laws relating to espionage and the national security or the export of technical data. Licensees should apprise themselves of current regulations especially with respect to certain countries, of other agencies, particularly the Office of Defense Trade Controls, Department of State (with respect to Arms, Munitions and Implements of War (22 CFR 121-128)); the Bureau of Industry and Security, Department of Commerce (15 CFR parts 730-774); the Office of Foreign AssetsControl, Department of Treasury (31 CFR Parts 500+) and the Department of Energy.

NOT GRANTED

No license under 35 U.S.C. 184 has been granted at this time, if the phrase "IF REQUIRED, FOREIGN FILING LICENSE GRANTED" DOES NOT appear on this form. Applicant may still petition for a license under 37 CFR 5.12, if a license is desired before the expiration of 6 months from the filing date of the application. If 6 months has lapsed from the filing date of this application and the licensee has not received any indication of a secrecy order under 35 U.S.C. 181, the licensee may foreign file the application pursuant to 37 CFR 5.15(b).

UNITED STATES PATENT AND TRADEMARK OFFICE

Commissioner for Patents
United States Patent and Trademark Office
P.O. Box 1450
Alexandria, VA 22313-1450
www.uspto.gov

MORGAN, LEWIS & BOCKIUS, LLP. (PA)
2 PALO ALTO SQUARE
3000 EL CAMINO REAL
PALO ALTO, CA 94306

COPY MAILED

JUN 1 1 2009

OFFICE OF PETITIONS

In re Application of	:	
Reiling et al.	:	DECISION ON PETITION
Application No. 11/419,975	:	TO WITHDRAW
Filed: May 23, 2006	:	FROM RECORD
Attorney Docket No. 33934-714.201	:	

This is a decision on the Request to Withdraw as attorney or agent of record under 37 C.F.R. § 1.36(b), filed June 22, 2006.

The request is **NOT APPROVED** because it is moot.

A review of the file record indicates that all previous powers of attorney were revoked by the assignee of the patent application on August 7, 2006. Accordingly, the request to withdraw under 37 C.F.R. § 1.36(b) is moot.

All future communications from the Office will continue to be directed to the below-listed address until otherwise notified by applicant.

Telephone inquires concerning this decision should be directed to the undersigned at 571-272-6059.

Alicia Kelley
Petitions Examiner
Office of Petitions

cc: WILSON SONSINI GOODRICH & ROSATI
650 PAGE MILL ROAD
PALO ALTO, CA 94304-1050

UNITED STATES PATENT AND TRADEMARK OFFICE

Commissioner for Patents
United States Patent and Trademark Office
P.O. Box 1450
Alexandria, VA 22313-1450
www.uspto.gov

COPY MAILED
SEP 18 2006
OFFICE OF PETITIONS

BORGWARNER INC.
3850 HAMLIN ROAD
AUBURN HILLS MI 48326

In re Application of
Kunihiko Mishima
Application No. 11/420,043
Deposited: May 24, 2006
Attorney Docket No.:BW-DKT05152
Title of Invention: Blade Tensioner

ON PETITION

This is a decision on the petition filed July 14, 2006, requesting that the above-identified nonprovisional application be accorded a filing date of May 24, 2006.

Application papers in the above-identified application were deposited on May 24, 2006. However, on June 2, 2006, the Office of Initial Patent Examination mailed a "Notice of Incomplete Nonprovisional Application", notifying applicants that the application papers had not been accorded a filing date because the application was deposited without drawings.[1]

In response, on July 14, 2006, petitioner argues that he above-identified application claims benefit of and incorporates by reference prior filed foreign application Japanese application number 2005-156632 in which the omitted drawings can be located.

Upon further review of the petition and the application file it is evident the claims presented with the original disclosure included at least one method claim. It has been USPTO practice to treat an application that contains at least one process or method claim as an application for which a drawing is not necessary for an understanding of the invention under 35 U.S.C. 113 (first sentence). See MPEP 601.01(f).

---

[1] See 35 U.S.C. 111(a)(4)

Since the application should have been accorded a filing date and a Notice of Omitted Parts should have been issued rather than a Notice of Incomplete Application, the application will be accorded the requested filing date of May 24, 2006 without drawings.

The petition is granted to the extent indicated above. The petition fee will be refunded.

If petitioner desires, an amendment seeking entry of the drawings may be submitted. The examiner will make a determination whether the drawings should be entered.

The application is being forwarded to the Office of Initial Patent Examination to accord the application a **filing date of May 24, 2006**, without any drawings.

Telephone inquiries related to this decision may be directed to the undersigned at (571) 272-3215.

Charlema R. Grant
Petition Attorney
Office of Petitions

cc: Brown & Michaels, P.C.
400 M&T Banks Building -118 N. Tioga St.
Ithaca, NY 14850

UNITED STATES PATENT AND TRADEMARK OFFICE

Commissioner for Patents
United States Patent and Trademark Office
P.O. Box 1450
Alexandria, VA 22313-1450
www.uspto.gov

MAILED

OCT 08 2008

TECHNOLOGY CENTER 2100

SHIMOKAJI & ASSOCIATES, P.C.
8911 RESEARCH DRIVE
IRVINE CA 92618

In re Application of: Atsushi HARADA
Application No. 11/420,048
Filed: May 24, 2006
For: SERVER DEVICE, MANAGEMENT METHOD AND PROGRAM PRODUCT

DECISION ON REQUEST TO PARTICIPATE IN PATENT PROSECUTION HIGHWAY PILOT PROGRAM AND PETITION TO MAKE SPECIAL UNDER 37 CFR 1.102(d)

This is a decision on the request to participate in the Patent Prosecution Highway (PPH) pilot program and the petition under 37 CFR 1.102(d), filed August 26, 2008, to make the above-identified application special.

The petition is **GRANTED.**

A grantable request to participate in the PPH pilot program and petition to make special require:

(1) The U.S. application must validly claim priority under 35 U.S.C. 119(a) to one or more applications filed in the JPO;

(2) Applicant must submit a copy of the allowable/patentable claim(s) from the JPO application(s) along with an English translation thereof and a statement that the English translation is accurate;

(3) All the claims in the U.S. application must sufficiently correspond or be amended to sufficiently correspond to the allowable/patentable claim(s) in the JPO application(s);

(4) Examination of the U.S. application has not begun;

(5) Applicant must submit a copy of all the office actions from each of the JPO application(s) containing the allowable/patentable claim(s) along with an English translation thereof and a statement that the English translation is accurate;

(6) Applicant must submit an IDS listing the documents cited by the JPO examiner in

the JPO office action along with copies of documents except U.S. patents or U.S. patent application publications; and

(7) The required petition fee under 37 CFR 1.17(h).

The request to participate in the PPH pilot program and petition are found to comply with the above requirements. Accordingly, the above-identified application has been accorded "special" status.

Telephone inquiries concerning this decision should be directed to Mano Padmanabhan at 571-272-4210.

All other inquiries concerning the examination or status of the application is accessible in the PAIR system at http://www.uspto.gov/ebc/index.html.

The application is being forwarded to the examiner for action on the merits commensurate with this decision.

/Mano Padmanabhan/

Mano Padmanabhan
Quality Assurance Specialist, Technology Center 2100, Workgroup 2180
571-272-4210

UNITED STATES PATENT AND TRADEMARK OFFICE

Commissioner for Patents
United States Patent and Trademark Office
P.O. Box 1450
Alexandria, VA 22313-1450
www.uspto.gov

PROCOPIO, CORY, HARGREAVES & SAVITCH LLP
530 B STREET
SUITE 2100
SAN DIEGO CA 92101

COPY MAILED
DEC 1 2 2006
OFFICE OF PETITIONS

In re Application of	:	
Bartley et al.	:	
Application No. 11/420,064	:	DECISION ON PETITION
Filed: May 24, 2006	:	TO MAKE SPECIAL UNDER
Attorney Docket No. 110866-ISE28	:	37 CFR 1.102(c)(2)
	:	

This is a decision on the petition under 37 CFR 1.102(c)(2)(i) & (ii), filed July, 26, 2006, to make the above-identified application special based on the invention (a) materially enhancing the quality of the environment as set forth in M.P.E.P. § 708.02, Section V and (b) materially contributing to certain categories related to energy resource as set forth in M.P.E.P. § 708.02, Section VI.

The petitions are **DISMISSED**.

A grantable petition to make an application special under 37 CFR 1.102(c)(2)(i) and MPEP § 708.02, Section V: Environmental Quality, must state that special status is sought because the invention materially enhances the quality of the environment by contributing to the restoration or maintenance of basic life-sustaining natural elements. If the disclosure is not clear on its face that the claimed invention materially enhances the quality of the environment by contributing to the restoration or maintenance of one of the basic life-sustaining natural elements, the petition must be accompanied by a statement by the applicant, assignee, or an attorney/agent registered to practice before the Office explaining how the materiality standard is met. No fee is required.

The instant invention is directed to a method and system for braking regeneration and propulsion system. That the invention recovers part of energy expended in braking thereby saving fuel use and thus eliminating any potential emissions associated therewith does not in itself satisfy the materiality standard i.e., the petitioner has failed to state how the claimed invention contributes in a significant, substantial, or noticeable manner to the quality of the environment by contributing to the restoration or maintenance of basic life-sustaining natural elements.

A grantable petition to make an application special under 37 CFR 1.102(c)(2)(ii) and MPEP § 708.02, Section VI: Energy, must state that special status is sought because the invention materially contributes to (A) the discovery or development of energy resources, or (B) the more efficient utilization and conservation of energy resources. Examples of inventions in category (A) would be developments in fossil fuels (natural gas, coal, and petroleum), hydrogen fuel technologies, nuclear energy, solar energy, etc. Category (B) would include inventions relating to the reduction of energy consumption in combustion

systems, industrial equipment, household appliances, etc. If the application disclosure is not clear on its face that the claimed invention materially contributes to category (A) or (B), the petition must be accompanied by a statement under 37 CFR 1.102 by the applicant, assignee, or an attorney/agent registered to practice before the Office explaining how the materiality standard is met. No fee is required.

The invention is generally directed to a method and system for braking regeneration and propulsion system, that involves recovering part of energy expended in braking and using the same for propulsion and meeting other energy demands. Such devices/methods are known in the art. Although, the invention could lead to energy savings, the materiality standard of the rule has not been met, i.e., petitioner has failed to state how the claimed invention contributes in a significant, substantial, or noticeable manner to category (A) or (B).

This lack of meeting the materiality standards of 37 CFR 102(c)(2) (i) and (ii) does not permit the applicant to enjoy the benefit of advanced examination.

Further correspondence with respect to this matter should be addressed as follows:

By Mail: Mail Stop PETITION
Commissioner for Patents
P. O. Box 1450
Alexandria, VA 22313-1450

By hand: U. S. Patent and Trademark Office
Customer Service Window, Mail Stop Petitions
Randolph Building
401 Dulany Street
Alexandria, VA 22314

By FAX: (571) 273-8300

Telephone inquiries concerning this decision should be directed to Ramesh Krishnamurthy at 571-272-4914, or to the undersigned at 571-272-7099.

All other inquiries concerning either the examination or status of the application should be directed to the Technology Center.

The application is being forwarded to the Technology Center Art Unit 3618 for action in its regular turn.

David Buczo
Petitions Examiner
Office of Petitions

UNITED STATES PATENT AND TRADEMARK OFFICE

Commissioner for Patents
United States Patent and Trademark Office
P.O. Box 1450
Alexandria, VA 22313-1450
www.uspto.gov

PROCOPIO, CORY, HARGREAVES & SAVITCH LLP
530 B STREET, SUITE 2100
SAN DIEGO CA 92101

COPY MAILED

FEB 1 2 2008

OFFICE OF PETITIONS

In re Application of	:	
BARTLEY, et al.	:	
Application No. 11/420,064	:	DECISION ON PETITION
Filed: May 24, 2006	:	TO MAKE SPECIAL UNDER
Attorney Docket No. **110866-ISE28**	:	37 CFR 1.102(c)(1)
	:	

This is a decision on the petition under 37 CFR 1.102(c)(1), filed January 30, 2007, to make the above-identified application special based on applicant's age as set forth in M.P.E.P. § 708.02, Section IV.

The petition is **GRANTED.**

A grantable petition to make an application special under 37 CFR 1.102(c)(1) and MPEP § 708.02, Section IV: Applicant's Age must be accompanied by evidence showing that at least one of the applicants is 65 years of age, or more, such as a birth certificate or a statement by applicant. No fee is required

The instant petition includes the declaration and driver's license of inventor Thomas L. Bartley, attesting to his age. Accordingly, the above-identified application has been accorded "special" status.

Inquiries concerning either the examination or status of the application should be directed to the Technology Center at (571) 272-3600.

Telephone inquiries concerning this decision should be directed to the undersigned at 571-272-7253.

The application is being forwarded to the Technology Center Art Unit 3617 for action on the merits commensurate with this decision.

Monica A. Graves
Petitions Examiner
Office of Petitions

UNITED STATES PATENT AND TRADEMARK OFFICE

UNITED STATES DEPARTMENT OF COMMERCE
United States Patent and Trademark Office
Address: COMMISSIONER FOR PATENTS
P.O. Box 1450
Alexandria, Virginia 22313-1450
www.uspto.gov

APPLICATION NO.	FILING DATE	FIRST NAMED INVENTOR	ATTORNEY DOCKET NO.	CONFIRMATION NO.
11/420,067	05/24/2006	Atsushi SAKAWAKI	90606.161/ai	1392

7590 03/30/2009
YAMAHA HATSUDOKI KABUSHIKI KAISHA
C/O KEATING & BENNETT, LLP
1800 Alexander Bell Drive
SUITE 200
Reston, VA 20191

EXAMINER
ABEBE, DANIEL DEMELASH

ART UNIT	PAPER NUMBER
2626	

NOTIFICATION DATE	DELIVERY MODE
03/30/2009	ELECTRONIC

DECISION GRANTING PETITION UNDER 37 CFR 1.138(d)

The declaration of express abandonment is recognized

This is in response to the petition under 37 CFR 1.138(d), requesting for a refund of any previously paid search fee and excess claims fee in the above-identified application.

The petition is granted.

The express abandonment is recognized. Any previously paid search fee and excess claims fee are hereby refunded.

Telephone inquiries should be directed to the Office of Data Management at (571) 272-4200.

Betty Powell

Patent Publication Branch
Office of Data Management

Adjustment date: 03/27/2009 BPOWELL
05/24/2006 INTEFSW 00000602 11420067
02 FC:1111 -500.00 OP
04 FC:1201 -200.00 OP

Adjustment date: 03/27/2009 BPOWELL
05/24/2006 INTEFSW 00000602 11420067
02 FC:1111 -500.00 OP
04 FC:1201 -200.00 OP

FORM PET651G (Rev. 08/07)

Refund Ref: 0030068175
03/27/2009

Credit Card Refund Total: $700.00

Am Exp..: XXXXXXXXXXX5008

UNITED STATES PATENT AND TRADEMARK OFFICE

COMMISSIONER FOR PATENTS
UNITED STATES PATENT AND TRADEMARK OFFICE
WASHINGTON, D.C. 20231
www.uspto.gov

APPLICATION NUMBER	FILING/RECEIPT DATE	FIRST NAMED APPLICANT	ATTORNEY DOCKET NUMBER
11/420,071	05/24/2006	Ken Yanagisawa	P06811US1

CONFIRMATION NO.
1399

ZARLEY LAW FIRM P.L.C.
CAPITAL SQUARE
400 LOCUST, SUITE 200
DES MOINES IA 50309-2350

Date Mailed: December 11, 2006

Decision Dismissing Petition under 37 CFR 1.138(c)

The declaration of express abandonment will not be recognized

This is in response to the petition under 37 CFR 1.138(c), for express abandonment to avoid publication of the above-identified application.

The petition is dismissed.

The express abandonment will **not** be recognized for the reason(s) indicated below:

1. ☐ The petition under 37 CFR 1.138(c) was not filed in sufficient time to permit the appropriate officials to recognize the abandonment and remove the application from the publication process.

2. ☐ The petition was not signed by a party authorized by 37 CFR 1.33(b)(1), (3) or (4).

3. ☑ The Application was published in compliance with 35 U.S.C. 122(b), and it is available on the USPTO web site at http://www.uspto.gov/patft/index.html.

4. ☑ Petition fee was not paid.

The application **has/will be published** as scheduled.

Telephone inquiries should be directed Office of Patent Publication, Pre-Grant Publication Division, 703-605-4283.

Barbara J. Debnam
Office of Patent Publication
Pre-Grant Publication Division

Rev. 10/01

SPE RESPONSE FOR CERTIFICATE OF CORRECTION

Paper No.: _____

DATE : 12/01/09

TO SPE OF : ART UNIT 3664

SUBJECT : Request for Certificate of Correction for Appl. No.: ~~11341138~~ 11/420,079 Patent No.: 7599789

Please respond to this request for a certificate of correction within 7 days.

FOR IFW FILES:

Please review the requested changes/corrections as shown in the **COCIN** document(s) in the IFW application image. No new matter should be introduced, nor should the scope or meaning of the claims be changed.

Please complete the response (see below) and forward the completed response to scanning using document code **COCX**.

FOR PAPER FILES:

Please review the requested changes/corrections as shown in the attached certificate of correction. Please complete this form (see below) and forward it with the file to:

Certificates of Correction Branch (C of C)
Randolph Square 9D40-D
Palm Location 7580

You can fax the Directors/SPE response to 571-270-9990

Lamonte Newsome
Certificates of Correction Branch
703-756-1574

Thank You For Your Assistance

The request for issuing the above-identified correction(s) is hereby:
Note your decision on the appropriate box.

- [x] **Approved** — **All** changes apply.
- [ ] **Approved in Part** — Specify below which changes **do not** apply.
- [ ] **Denied** — State the reasons for denial below.

Comments: _____

SPE RESPONSE FOR CERTIFICATE OF CORRECTION

SPE Art Unit

KHOI H. TRAN
SUPERVISORY PATENT EXAMINER

UNITED STATES PATENT AND TRADEMARK OFFICE

UNITED STATES DEPARTMENT OF COMMERCE
United States Patent and Trademark Office
Address: COMMISSIONER FOR PATENTS
P.O. Box 1450
Alexandria, Virginia 22313-1450
www.uspto.gov

Eric A. Gifford (Raytheon Company)
11770 E. Calle del Valle
Tucson, AZ 85749

Mail Date: 04/20/2010

Applicant	: Jon N. Leonard	: DECISION ON REQUEST FOR
Patent Number	: 7599789	: RECALCULATION of PATENT
Issue Date	: 10/06/2009	: TERM ADJUSTMENT IN VIEW
Appliction No	: 11/420,079	: OF WYETH AND NOTICE OF INTENT TO
Filed	: 05/24/2006	: ISSUE CERTIFICATE OF CORRECTION
		:

The Request for Recalculation is **GRANTED** to the extent indicated.

The patent term adjustment has been determined to be **563** days. The USPTO will *sua sponte* issue a certificate of correction reflecting the amount of PTA days determined by the recalculation.

Prior to the issuance of the certificate of correction, the USPTO will afford patentee an opportunity to be heard and request reconsideration. Accordingly, patentee has **one month or thirty (30) days**, whichever is longer, to file a request for reconsideration of this patent term adjustment calculation. See 35 U.S.C. 154(b)(3)(B)(ii) and 37 CFR 1.322(a)(4). No extensions of time will be granted under 37 CFR 1.136.

Patentee should use document code PET.OP if electronically filing a request for reconsideration of this patent term adjustment calculation. The patentee must also include the information required by 37 CFR 1.705(b)(2) and the fee required by 37 CFR 1.18(e). If patentee does not file a timely request for reconsideration of this patent term adjustment calculation including the information required by 37 CFR 1.705(b)(2) and the fee required by 37 CFR 1.18(e), the USPTO will issue a certificate of correction reflecting the PTA determination noted above.

Patentee should be aware that in order to preserve the right to review in the United States District Court for the District of Columbia of the USPTO patent term adjustment determination, patentee must ensure that he or she also take the steps required under 35 U.S.C. 154(b)(4)(A) in a timely manner. Nothing in the request for recalculation should be construed as providing an alternative time frame for commencing a civil action under 35 U.S.C. 154(b)(4)(A).

Any questions concerning this decision should be directed to the Office of Patent Legal Administration at 571-272-7702.

UNITED STATES PATENT AND TRADEMARK OFFICE

Commissioner for Patents
United States Patent and Trademark Office
P.O. Box 1450
Alexandria, VA 22313-1450
www.uspto.gov

MAIL

DEC 15 2008

DIRECTOR'S OFFICE
TECHNOLOGY CENTER 2600

GREENBLUM & BERNSTEIN, P.L.C.
1950 ROLAND CLARKE PLACE
RESTON VA 20191

In re Application of	:	
AOYAMA, KOJI	:	DECISION ON REQUEST TO
Application No. 11/420,080	:	PARTICIPATE IN PATENT
Filed: May 24, 2006	:	PROSECUTION HIGHWAY
Attorney Docket No. P29351.DC1	:	PROGRAM AND PETITION
	:	TO MAKE SPECIAL UNDER
	:	37 CFR 1.102(d)

This is a decision on the request to participate in the Patent Prosecution Highway (PPH) program and the petition under 37 CFR 1.102(d), filed December 01, 2008, to make the above-identified application special.

The request and petition are **GRANTED**.

A grantable request to participate in the PPH program and petition to make special require:

(1) The U.S. application must validly claim priority under 35 U.S.C. 119(a) to one or more applications filed in the JPO;
(2) Applicant must submit a copy of the allowable/patentable claim(s) from the JPO application(s) along with an English translation thereof and a statement that the English translation is accurate;
(3) All the claims in the U.S. application must sufficiently correspond or be amended to sufficiently correspond to the allowable/patentable claim(s) in the JPO application(s);
(4) Examination of the U.S. application has not begun;
(5) Applicant must submit a copy of all the office actions from each of the JPO application(s) containing the allowable/patentable claim(s) along with an English translation thereof and a statement that the English translation is accurate;
(6) Applicant must submit an IDS listing the documents cited by the JPO examiner in the JPO office action along with copies of documents except U.S. patents or U.S. patent application publications; and
(7) The required petition fee under 37 CFR 1.17(h).

The request to participate in the PPH program and petition comply with the above requirements. Accordingly, the above-identified application has been accorded "special" status.

Telephone inquiries concerning this decision should be directed to Kenneth Wieder at 571-272-2986.

All other inquiries concerning the examination or status of the application should be directed to Patent Application Information Retrieval (PAIR) system.

The application is being forwarded to the examiner for action on the merits commensurate with this decision.

Kenneth Wieder
Quality Assurance Specialist
Technology Center 2600
Communications

UNITED STATES PATENT AND TRADEMARK OFFICE

UNITED STATES DEPARTMENT OF COMMERCE
United States Patent and Trademark Office
Address: COMMISSIONER FOR PATENTS
P.O. Box 1450
Alexandria, Virginia 22313-1450
www.uspto.gov

KIMBERLY-CLARK WORLDWIDE, INC.
Tara Pohlkotte
2300 Winchester Rd.
NEENAH, WI 54956

Mail Date: 04/21/2010

Applicant	: Paul Francis Tramontina	: DECISION ON REQUEST FOR
Patent Number	: 7591396	: RECALCULATION of PATENT
Issue Date	: 09/22/2009	: TERM ADJUSTMENT IN VIEW
Appliction No	: 11/420,085	: OF WYETH AND NOTICE OF INTENT TO
Filed	: 05/24/2006	: ISSUE CERTIFICATE OF CORRECTION
		:

The Request for Recalculation is **GRANTED** to the extent indicated.

The patent term adjustment has been determined to be **704** days. The USPTO will *sua sponte* issue a certificate of correction reflecting the amount of PTA days determined by the recalculation.

Prior to the issuance of the certificate of correction, the USPTO will afford patentee an opportunity to be heard and request reconsideration. Accordingly, patentee has **one month or thirty (30) days**, whichever is longer, to file a request for reconsideration of this patent term adjustment calculation. See 35 U.S.C. 154(b)(3)(B)(ii) and 37 CFR 1.322(a)(4). No extensions of time will be granted under 37 CFR 1.136.

Patentee should use document code PET.OP if electronically filing a request for reconsideration of this patent term adjustment calculation. The patentee must also include the information required by 37 CFR 1.705(b)(2) and the fee required by 37 CFR 1.18(e). If patentee does not file a timely request for reconsideration of this patent term adjustment calculation including the information required by 37 CFR 1.705(b)(2) and the fee required by 37 CFR 1.18(e), the USPTO will issue a certificate of correction reflecting the PTA determination noted above.

Patentee should be aware that in order to preserve the right to review in the United States District Court for the District of Columbia of the USPTO patent term adjustment determination, patentee must ensure that he or she also take the steps required under 35 U.S.C. 154(b)(4)(A) in a timely manner. Nothing in the request for recalculation should be construed as providing an alternative time frame for commencing a civil action under 35 U.S.C. 154(b)(4)(A).

Any questions concerning this decision should be directed to the Office of Patent Legal Administration at 571-272-7702.

UNITED STATES PATENT AND TRADEMARK OFFICE

UNITED STATES DEPARTMENT OF COMMERCE
United States Patent and Trademark Office
Address: COMMISSIONER FOR PATENTS
P.O. Box 1450
Alexandria, Virginia 22313-1450
www.uspto.gov

SHARP KABUSHIKI KAISHA
C/O KEATING & BENNETT, LLP
1800 Alexander Bell Drive
SUITE 200
Reston, VA 20191

Mail Date: 04/20/2010

Applicant	: Hisanori BESSHO	: DECISION ON REQUEST FOR
Patent Number	: 7609337	: RECALCULATION of PATENT
Issue Date	: 10/27/2009	: TERM ADJUSTMENT IN VIEW
Appliction No	: 11/420,106	: OF WYETH AND NOTICE OF INTENT TO
Filed	: 05/24/2006	: ISSUE CERTIFICATE OF CORRECTION
		:

The Request for Recalculation is **GRANTED** to the extent indicated.

The patent term adjustment has been determined to be **35** days. The USPTO will *sua sponte* issue a certificate of correction reflecting the amount of PTA days determined by the recalculation.

Prior to the issuance of the certificate of correction, the USPTO will afford patentee an opportunity to be heard and request reconsideration. Accordingly, patentee has **one month or thirty (30) days**, whichever is longer, to file a request for reconsideration of this patent term adjustment calculation. See 35 U.S.C. 154(b)(3)(B)(ii) and 37 CFR 1.322(a)(4). No extensions of time will be granted under 37 CFR 1.136.

Patentee should use document code PET.OP if electronically filing a request for reconsideration of this patent term adjustment calculation. The patentee must also include the information required by 37 CFR 1.705(b)(2) and the fee required by 37 CFR 1.18(e). If patentee does not file a timely request for reconsideration of this patent term adjustment calculation including the information required by 37 CFR 1.705(b)(2) and the fee required by 37 CFR 1.18(e), the USPTO will issue a certificate of correction reflecting the PTA determination noted above.

Patentee should be aware that in order to preserve the right to review in the United States District Court for the District of Columbia of the USPTO patent term adjustment determination, patentee must ensure that he or she also take the steps required under 35 U.S.C. 154(b)(4)(A) in a timely manner. Nothing in the request for recalculation should be construed as providing an alternative time frame for commencing a civil action under 35 U.S.C. 154(b)(4)(A).

Any questions concerning this decision should be directed to the Office of Patent Legal Administration at 571-272-7702.

UNITED STATES PATENT AND TRADEMARK OFFICE

UNITED STATES DEPARTMENT OF COMMERCE
United States Patent and Trademark Office
Address: COMMISSIONER FOR PATENTS
P.O. Box 1450
Alexandria, Virginia 22313-1450
www.uspto.gov

SHARP KABUSHIKI KAISHA
C/O KEATING & BENNETT, LLP
1800 Alexander Bell Drive
SUITE 200
Reston, VA 20191

Mail Date: 05/17/2010

Applicant : Hisanori BESSHO
Patent Number : 7609337
Issue Date : 10/27/2009
Application No : 11/420,106
Filed : 05/24/2006

: NOTICE CONCERNING IMPROPER
: CALCULATION OF PATENT TERM
: ADJUSTMENT BASED UPON USPTO
: IMPROPERLY MEASURING REDUCTION
: PERIOD UNDER 37 CFR 1.704(c)(10).

The United States Patent and Trademark Office (USPTO) discovered that in processing the recent recalculation decisions mailed in response to patentee's filed Request for Recalculation of Patent Term Adjustment in view of Wyeth, the USPTO improperly measured the reduction period for reductions under 37 CFR 1.704(c)(10). Pursuant to 37 CFR 1.704(c)(10), patentee's reduction begins on the date of filing the amendment under 37 CFR 1.312 ("1.312 amendment") or other related paper and ends on the date that the Office mails a response to the filing of the 1.312 amendment or other paper. It has been discovered that during the recalculation, the calculation failed to the limit the reduction to the mail date of the response to the 1.312 amendment or other paper. Accordingly, patentee's reductions were greater than warranted.

This notice **VACATES** the previous GRANTED request for recalculation and provides patentee with a revised GRANTED recalculation.

The patent term adjustment has been determined to be **78** days. The USPTO will *sua sponte* issue a certificate of correction reflecting the amount of patent term adjustment (PTA) days determined by the recalculation.

Prior to the issuance of the certificate of correction, the USPTO will afford patentee an opportunity to be heard and request reconsideration. Accordingly, patentee has **one month or thirty (30) days** from the mail date of this notice, whichever is longer, to file a request for reconsideration of this PTA calculation. See 35 U.S.C. § 154(b)(3)(B)(ii) and 37 CFR 1.322(a)(4).

Patentee should use document code PET.OP if electronically filing a request for reconsideration of this PTA calculation. The patentee must also include the information required by 37 CFR 1.705(b)(2), and the fee required by 37 CFR 1.18(e). If patentee does not file a timely request for reconsideration of this PTA calculation, including the information required by 37 CFR 1.705(b)(2) and the fee required by 37 CFR 1.18(e), the USPTO will issue a certificate of correction reflecting the PTA determination noted above.

Patentee should be aware that in order to preserve the right of review of the USPTO's PTA determination in the United States District Court for the District of Columbia, patentee must ensure that the steps required under 35 U.S.C. § 154 (b)(4) are taken in a timely manner. Nothing in the request for recalculation should be construed as providing an alternative time frame for commencing a civil action under 35 U.S.C. § 154(b)(4).

UNITED STATES PATENT AND TRADEMARK OFFICE

UNITED STATES DEPARTMENT OF COMMERCE
United States Patent and Trademark Office
Address: COMMISSIONER FOR PATENTS
P.O. Box 1450
Alexandria, Virginia 22313-1450
www.uspto.gov

STANZIONE & KIM, LLP
919 18TH STREET, N.W.
SUITE 440
WASHINGTON, DC 20006

Mail Date: 05/21/2010

Applicant	: Ho-keun LEE	: DECISION ON REQUEST FOR
Patent Number	: 7641302	: RECALCULATION of PATENT
Issue Date	: 01/05/2010	: TERM ADJUSTMENT IN VIEW
Application No	: 11/420,120	: OF WYETH AND NOTICE OF INTENT TO
Filed	: 05/24/2006	: ISSUE CERTIFICATE OF CORRECTION
		:

The Request for Recalculation is **GRANTED** to the extent indicated.

The patent term adjustment has been determined to be **539** days. The USPTO will *sua sponte* issue a certificate of correction reflecting the amount of PTA days determined by the recalculation.

Prior to the issuance of the certificate of correction, the USPTO will afford patentee an opportunity to be heard and request reconsideration. Accordingly, patentee has **one month or thirty (30) days**, whichever is longer, to file a request for reconsideration of this patent term adjustment calculation. See 35 U.S.C. 154(b)(3)(B)(ii) and 37 CFR 1.322(a)(4). No extensions of time will be granted under 37 CFR 1.136.

Patentee should use document code PET.OP if electronically filing a request for reconsideration of this patent term adjustment calculation. The patentee must also include the information required by 37 CFR 1.705(b)(2) and the fee required by 37 CFR 1.18(e). If patentee does not file a timely request for reconsideration of this patent term adjustment calculation including the information required by 37 CFR 1.705(b)(2) and the fee required by 37 CFR 1.18(e), the USPTO will issue a certificate of correction reflecting the PTA determination noted above.

Patentee should be aware that in order to preserve the right to review in the United States District Court for the District of Columbia of the USPTO patent term adjustment determination, patentee must ensure that he or she also take the steps required under 35 U.S.C. 154(b)(4)(A) in a timely manner. Nothing in the request for recalculation should be construed as providing an alternative time frame for commencing a civil action under 35 U.S.C. 154(b)(4)(A).

Any questions concerning this decision should be directed to the Office of Patent Legal Administration at 571-272-7702.

UNITED STATES PATENT AND TRADEMARK OFFICE

Commissioner for Patents
United States Patent and Trademark Office
P.O. Box 1450
Alexandria, VA 22313-1450
www.uspto.gov

MAIL

DEC 09 2008

DIRECTOR'S OFFICE
TECHNOLOGY CENTER 2600

GREENBLUM & BERNSTEIN, P.L.C.
1950 ROLAND CLARKE PLACE
RESTON VA 20191

In re Application of	:	
MAEHIRO, KAZUTOYO, et al.	:	DECISION ON REQUEST TO
Application No. 11/420,155	:	PARTICIPATE IN PATENT
Filed: May 24, 2006	:	PROSECUTION HIGHWAY
Attorney Docket No. P29353.DC1	:	PROGRAM AND PETITION
	:	TO MAKE SPECIAL UNDER
	:	37 CFR 1.102(d)

This is a decision on the request to participate in the Patent Prosecution Highway (PPH) program and the petition under 37 CFR 1.102(d), filed October 07, 2008, to make the above-identified application special.

The request and petition are **GRANTED**.

A grantable request to participate in the PPH program and petition to make special require:

(1) The U.S. application must validly claim priority under 35 U.S.C. 119(a) to one or more applications filed in the JPO;
(2) Applicant must submit a copy of the allowable/patentable claim(s) from the JPO application(s) along with an English translation thereof and a statement that the English translation is accurate;
(3) All the claims in the U.S. application must sufficiently correspond or be amended to sufficiently correspond to the allowable/patentable claim(s) in the JPO application(s);
(4) Examination of the U.S. application has not begun;
(5) Applicant must submit a copy of all the office actions from each of the JPO application(s) containing the allowable/patentable claim(s) along with an English translation thereof and a statement that the English translation is accurate;
(6) Applicant must submit an IDS listing the documents cited by the JPO examiner in the JPO office action along with copies of documents except U.S. patents or U.S. patent application publications; and
(7) The required petition fee under 37 CFR 1.17(h).

The request to participate in the PPH program and petition comply with the above requirements. Accordingly, the above-identified application has been accorded "special" status.

Telephone inquiries concerning this decision should be directed to Kenneth Wieder at 571-272-2986.

All other inquiries concerning the examination or status of the application should be directed to Patent Application Information Retrieval (PAIR) system.

The application is being forwarded to the examiner for action on the merits commensurate with this decision.

Kenneth Wieder
Quality Assurance Specialist
Technology Center 2600
Communications

UNITED STATES PATENT AND TRADEMARK OFFICE

Commissioner for Patents
United States Patent and Trademark Office
P.O. Box 1450
Alexandria, VA 22313-1450
www.uspto.gov

APPLICATION NUMBER	FILING/RECEIPT DATE	FIRST NAMED APPLICANT	ATTORNEY DOCKET NUMBER
11/420,171	05/24/2006	Alfredo Valles Navarro	5845

SHOEMAKER AND MATTARE, LTD
10 POST OFFICE ROAD - SUITE 110
SILVER SPRING MD 20910

DATE MAILED: May 1, 2007

DECISION GRANTING PETITION UNDER 37 CFR 1.138(d)
The declaration of express abandonment is recognized

This is in response to the petition under 37 CFR 1.138(d) filed April 13, 2007, requesting for a refund of any previously paid search fee and excess claims fee in the above-identified application.

The petition is granted.

The express abandonment is recognized. Any previously paid search fee and excess claims fee are hereby refunded.

Any inquiries concerning this decision should be directed to the Pre-Grant Publication Division at (703) 605-4283.

Barbara J. Debnam
Pre-Grant Publication Division

UNITED STATES PATENT AND TRADEMARK OFFICE

UNITED STATES DEPARTMENT OF COMMERCE
United States Patent and Trademark Office
Address: COMMISSIONER FOR PATENTS
P.O. Box 1450
Alexandria, Virginia 22313-1450
www.uspto.gov

Workman Nydegger
1000 Eagle Gate Tower
60 East South Temple
Salt Lake City, UT 84111

Mail Date: 04/21/2010

Applicant	: Naresh Shanbhag	: DECISION ON REQUEST FOR
Patent Number	: 7609102	: RECALCULATION of PATENT
Issue Date	: 10/27/2009	: TERM ADJUSTMENT IN VIEW
Appliction No	: 11/420,196	: OF WYETH AND NOTICE OF INTENT TO
Filed	: 05/24/2006	: ISSUE CERTIFICATE OF CORRECTION
		:

The Request for Recalculation is **GRANTED** to the extent indicated.

The patent term adjustment has been determined to be **106** days. The USPTO will *sua sponte* issue a certificate of correction reflecting the amount of PTA days determined by the recalculation.

Prior to the issuance of the certificate of correction, the USPTO will afford patentee an opportunity to be heard and request reconsideration. Accordingly, patentee has **one month or thirty (30) days**, whichever is longer, to file a request for reconsideration of this patent term adjustment calculation. See 35 U.S.C. 154(b)(3)(B)(ii) and 37 CFR 1.322(a)(4). No extensions of time will be granted under 37 CFR 1.136.

Patentee should use document code PET.OP if electronically filing a request for reconsideration of this patent term adjustment calculation. The patentee must also include the information required by 37 CFR 1.705(b)(2) and the fee required by 37 CFR 1.18(e). If patentee does not file a timely request for reconsideration of this patent term adjustment calculation including the information required by 37 CFR 1.705(b)(2) and the fee required by 37 CFR 1.18(e), the USPTO will issue a certificate of correction reflecting the PTA determination noted above.

Patentee should be aware that in order to preserve the right to review in the United States District Court for the District of Columbia of the USPTO patent term adjustment determination, patentee must ensure that he or she also take the steps required under 35 U.S.C. 154(b)(4)(A) in a timely manner. Nothing in the request for recalculation should be construed as providing an alternative time frame for commencing a civil action under 35 U.S.C. 154(b)(4)(A).

Any questions concerning this decision should be directed to the Office of Patent Legal Administration at 571-272-7702.

UNITED STATES PATENT AND TRADEMARK OFFICE

Commissioner for Patents
United States Patent and Trademark Office
P.O. Box 1450
Alexandria, VA 22313-1450
www.uspto.gov

LEYDIG, VOIT & MAYER, LTD.
(SEATTLE OFFICE)
TWO PRUDENTIAL PLAZA
SUITE 4900
CHICAGO, IL 60601-6731

COPY MAILED

APR 08 2008

OFFICE OF PETITIONS

In re Application of	:	
John SELBY	:	
Application No. 11/420,212	:	DECISION ON PETITION
Filed: May 24, 2006	:	TO WITHDRAW
Attorney Docket No. 307360		FROM RECORD
	:	

This is a decision on the Request to Withdraw as attorney or agent of record under 37 C.F.R. § 1.36(b), filed January 14, 2008.

The request is **NOT APPROVED**.

A grantable request to withdraw as attorney/agent of record must be signed by every attorney/agent seeking to withdraw or contain a clear indication that one attorney is signing on behalf of another/others. A request to withdraw will not be approved unless at least 30 (thirty) days would remain between the date of approval and the later of the expiration date of a time to file a response or the expiration date of the maximum time period which can be extended under 37 C.F.R. § 1.136(a).

The request cannot be approved because the attorneys/agents of record were not appointed by Customer No. 33042 as indicated. The attorneys/agents of record were appointed by Customer No. 23460.

All future communications from the Office will continue to be directed to the above-listed address until otherwise notified by applicant.

Telephone inquiries concerning this decision should be directed to the undersigned at 571-272-6735.

Diane Goodwyn
Petitions Examiner
Office of Petitions

cc: JOHN SELBY
80676 AVENIDA SANTA MARTA
INDIO, CA 92203

UNITED STATES PATENT AND TRADEMARK OFFICE

Commissioner for Patents
United States Patent and Trademark Office
P.O. Box 1450
Alexandria, VA 22313-1450
www.uspto.gov

LEYDIG, VOIT & MAYER, LTD.
(SEATTLE OFFICE)
TWO PRUDENTIAL PLAZA
SUITE 4900
CHICAGO, IL 60601-6731

COPY MAILED

JUL 07 2008

OFFICE OF PETITIONS

In re Application of	:	
John H. SELBY	:	
Application No. 11/420,212	:	DECISION ON PETITION
Filed: May 24, 2006	:	TO WITHDRAW
Attorney Docket No. 307360	:	FROM RECORD
	:	

This is a decision on the Request to Withdraw as attorney or agent of record under 37 C.F.R. § 1.36(b), filed June 11, 2008.

The request is **APPROVED**.

A grantable request to withdraw as attorney/agent of record must be signed by every attorney/agent seeking to withdraw or contain a clear indication that one attorney is signing on behalf of another/others. A request to withdraw will not be approved unless at least 30 (thirty) days would remain between the date of approval and the later of the expiration date of a time to file a response or the expiration date of the maximum time period which can be extended under 37 C.F.R. § 1.136(a).

The request was signed by John B. Conklin on behalf of the practitioners of record associated with Customer No. 23460.

The practitioners of record associated with Customer No. 23460 have been withdrawn.

Applicant is reminded that there is no attorney of record at this time.

The correspondence address of record has been changed and the new correspondence address is the address indicated below until otherwise properly notified by the applicant.

Telephone inquiries concerning this decision should be directed to the undersigned at 571-272-6735.

Diane Goodwyn
Petitions Examiner
Office of Petitions

cc: JOHN SELBY
80676 AVENIDA SANTA MARTA
INDIO, CA 92203

SPE RESPONSE FOR CERTIFICATE OF CORRECTION

Paper No.: X

DATE : July 10, 2008

TO SPE OF : ART UNIT 2837

SUBJECT : Request for Certificate of Correction for Appl. No.: 10/420213 Patent No.: 7319300 B2

A response is requested with respect to a request for a certificate of correction.

With respect to the change(s) requested to correct Office and/or Applicant's errors, should the patent read as shown in the certificate of correction attached herewith or the COCIN document(s), in IFW images for the above-identified patented application? No new matter should be introduced, nor should the scope or meaning of the claims be changed.

If the response is for an IFW, within **7** days, please complete and forward the response, to the employee (named below) via scanning into application images, using document code **COCX**.

DO NOT SENT TO ATTORNEY

If the response is for a paper file wrapper, please complete the response and forward the response with the paper file wrapper, to the employee (named below), within **7** days, to:

Certificates of Correction Branch (CofC)
South Tower - 9A22
Palm Location 7580

You can fax the Directors/SPE response to 571-270-9990

LAMONTE NEWSOME
Certificates of Correction Branch
703-308-9390 ext. 112

Thank You For Your Assistance

The request for issuing the above-identified correction(s) is hereby:
Note your decision on the appropriate box.

xApproved	**All** changes apply.
☐ **Approved in Part**	Specify below which changes **do not** apply.
☐ **Denied**	State the reasons for denial below.

Comments: _____

/Walter Benson/

SPE RESPONSE FOR CERTIFICATE OF CORRECTION

SPE	Art Unit
2837	

UNITED STATES PATENT AND TRADEMARK OFFICE

Commissioner for Patents
United States Patent and Trademark Office
P.O. Box 1450
Alexandria, VA 22313-1450
www.uspto.gov

QUALCOMM INCORPORATED
5775 MOREHOUSE DR.
SAN DIEGO CA 92121

COPY MAILED

AUG 21 2007

OFFICE OF PETITIONS

In re Application of :
Lee :
Application No. 11/420,220 : ON PETITION
Filed: May 25, 2006 :
Attorney Docket No. 040208 :

This is a decision on the petition under 37 CFR 1.137(b), filed April 17, 2007, to revive the above-identified application.

The petition under 37 CFR 1.137(b) is **GRANTED**.

This application became abandoned for failure to timely reply to the Notice to File Missing Parts of Application mailed June 5, 2006, which set a two month shortened statutory period for reply. No extensions of time having been obtained pursuant to 37 CFR 1.136(a) and no reply being received in the Office, this application became abandoned on August 6, 2006. A Notice of Abandonment was mailed on February 7, 2007.

Applicant has submitted a proper reply to the June 5, 2006 Notice in the form of an executed declaration, the $300.00 basic filing fee, the $500.00 search fee, the $200.00 examination fee, and $130.00 surcharge, an acceptable statement of the unintentional nature of the delay in responding to the June 5, 2006 Notice, and the $1,500.00 petition fee. Accordingly, the petition under 37 CFR 1.137(b) is granted.

After the mailing of this decision, the file will be returned to the Office of Initial Patent Examination for further processing.

Telephone inquiries concerning this matter may be directed to the undersigned at (571) 272-3230.

Shirene Willis Brantley
Senior Petitions Attorney
Office of Petitions

UNITED STATES PATENT AND TRADEMARK OFFICE

Commissioner for Patents
United States Patent and Trademark Office
P.O. Box 1450
Alexandria, VA 22313-1450
www.uspto.gov

LEO H MCCORMICK
2112 MISHAWAKA AVE
P O BOX 4721
SOUTH BEND IN 46634

COPY MAILED

JAN 16 2008

OFFICE OF PETITIONS

In re Application of	:	
McNaughton et al.	:	
Application No. 11/420,233	:	DECISION ON PETITION
Filed: May 25, 2006	:	
Attorney Docket No. R75449	:	

This is a decision on the petition under the unintentional provisions of 37 CFR 1.137(b), filed December 13, 2007, to revive the above-identified application.

The petition is **GRANTED**.

The petition satisfies the requirements of 37 CFR 1.137(b) in that petitioner has supplied (1) the reply in the form of an Oath/Declaration and late surcharge, (2) the petition fee, and (3) a proper statement of unintentional delay.

Telephone inquiries concerning this decision should be directed to the undersigned at (571) 272-3206.

This matter is being referred to the Office of Initial Patent Examination for further processing.

Liana Walsh
Petitions Examiner
Office of Petitions

UNITED STATES PATENT AND TRADEMARK OFFICE

UNITED STATES DEPARTMENT OF COMMERCE
United States Patent and Trademark Office
Address: COMMISSIONER FOR PATENTS
P.O. Box 1450
Alexandria, Virginia 22313-1450
www.uspto.gov

LNG/KLA JOINT CUSTOMER
C/O LUEDEKA, NEELY & GRAHAM, P.C.
P.O. BOX 1871
KNOXVILLE, TN 37901

Mail Date: 04/20/2010

Applicant	: Indranil De	: DECISION ON REQUEST FOR
Patent Number	: 7660687	: RECALCULATION of PATENT
Issue Date	: 02/09/2010	: TERM ADJUSTMENT IN VIEW
Appliction No	: 11/420,243	: OF WYETH AND NOTICE OF INTENT TO
Filed	: 05/25/2006	: ISSUE CERTIFICATE OF CORRECTION
		:

The Request for Recalculation is **GRANTED** to the extent indicated.

The patent term adjustment has been determined to be **648** days. The USPTO will *sua sponte* issue a certificate of correction reflecting the amount of PTA days determined by the recalculation.

Prior to the issuance of the certificate of correction, the USPTO will afford patentee an opportunity to be heard and request reconsideration. Accordingly, patentee has **one month or thirty (30) days**, whichever is longer, to file a request for reconsideration of this patent term adjustment calculation. See 35 U.S.C. 154(b)(3)(B)(ii) and 37 CFR 1.322(a)(4). No extensions of time will be granted under 37 CFR 1.136.

Patentee should use document code PET.OP if electronically filing a request for reconsideration of this patent term adjustment calculation. The patentee must also include the information required by 37 CFR 1.705(b)(2) and the fee required by 37 CFR 1.18(e). If patentee does not file a timely request for reconsideration of this patent term adjustment calculation including the information required by 37 CFR 1.705(b)(2) and the fee required by 37 CFR 1.18(e), the USPTO will issue a certificate of correction reflecting the PTA determination noted above.

Patentee should be aware that in order to preserve the right to review in the United States District Court for the District of Columbia of the USPTO patent term adjustment determination, patentee must ensure that he or she also take the steps required under 35 U.S.C. 154(b)(4)(A) in a timely manner. Nothing in the request for recalculation should be construed as providing an alternative time frame for commencing a civil action under 35 U.S.C. 154(b)(4)(A).

Any questions concerning this decision should be directed to the Office of Patent Legal Administration at 571-272-7702.

UNITED STATES PATENT AND TRADEMARK OFFICE

UNITED STATES DEPARTMENT OF COMMERCE
United States Patent and Trademark Office
Address: COMMISSIONER FOR PATENTS
P.O. Box 1450
Alexandria, Virginia 22313-1450
www.uspto.gov

LNG/KLA JOINT CUSTOMER
C/O LUEDEKA, NEELY & GRAHAM, P.C.
P.O. BOX 1871
KNOXVILLE, TN 37901

Mail Date: 05/17/2010

Applicant : Indranil De
Patent Number : 7660687
Issue Date : 02/09/2010
Application No : 11/420,243
Filed : 05/25/2006

: NOTICE CONCERNING IMPROPER
: CALCULATION OF PATENT TERM
: ADJUSTMENT BASED UPON USPTO
: IMPROPERLY MEASURING REDUCTION
: PERIOD UNDER 37 CFR 1.704(c)(10).

The United States Patent and Trademark Office (USPTO) discovered that in processing the recent recalculation decisions mailed in response to patentee's filed Request for Recalculation of Patent Term Adjustment in view of Wyeth, the USPTO improperly measured the reduction period for reductions under 37 CFR 1.704(c)(10). Pursuant to 37 CFR 1.704(c)(10), patentee's reduction begins on the date of filing the amendment under 37 CFR 1.312 ("1.312 amendment") or other related paper and ends on the date that the Office mails a response to the filing of the 1.312 amendment or other paper. It has been discovered that during the recalculation, the calculation failed to the limit the reduction to the mail date of the response to the 1.312 amendment or other paper. Accordingly, patentee's reductions were greater than warranted.

This notice **VACATES** the previous GRANTED request for recalculation and provides patentee with a revised GRANTED recalculation.

The patent term adjustment has been determined to be **686** days. The USPTO will *sua sponte* issue a certificate of correction reflecting the amount of patent term adjustment (PTA) days determined by the recalculation.

Prior to the issuance of the certificate of correction, the USPTO will afford patentee an opportunity to be heard and request reconsideration. Accordingly, patentee has **one month or thirty (30) days** from the mail date of this notice, whichever is longer, to file a request for reconsideration of this PTA calculation. See 35 U.S.C. § 154(b)(3)(B)(ii) and 37 CFR 1.322(a)(4).

Patentee should use document code PET.OP if electronically filing a request for reconsideration of this PTA calculation. The patentee must also include the information required by 37 CFR 1.705(b)(2), and the fee required by 37 CFR 1.18(e). If patentee does not file a timely request for reconsideration of this PTA calculation, including the information required by 37 CFR 1.705(b)(2) and the fee required by 37 CFR 1.18(e), the USPTO will issue a certificate of correction reflecting the PTA determination noted above.

Patentee should be aware that in order to preserve the right of review of the USPTO's PTA determination in the United States District Court for the District of Columbia, patentee must ensure that the steps required under 35 U.S.C. § 154 (b)(4) are taken in a timely manner. Nothing in the request for recalculation should be construed as providing an alternative time frame for commencing a civil action under 35 U.S.C. § 154(b)(4).

UNITED STATES PATENT AND TRADEMARK OFFICE

UNITED STATES DEPARTMENT OF COMMERCE
United States Patent and Trademark Office
Address: COMMISSIONER FOR PATENTS
P.O. Box 1450
Alexandria, Virginia 22313-1450
www.uspto.gov

FORD GLOBAL TECHNOLOGIES, LLC
FAIRLANE PLAZA SOUTH, SUITE 800
330 TOWN CENTER DRIVE
DEARBORN, MI 48126

Mail Date: 04/21/2010

Applicant	: Bill Coughlin	: DECISION ON REQUEST FOR
Patent Number	: 7603228	: RECALCULATION of PATENT
Issue Date	: 10/13/2009	: TERM ADJUSTMENT IN VIEW
Appliction No	: 11/420,249	: OF WYETH AND NOTICE OF INTENT TO
Filed	: 05/25/2006	: ISSUE CERTIFICATE OF CORRECTION
		:

The Request for Recalculation is **GRANTED** to the extent indicated.

The patent term adjustment has been determined to be **304** days. The USPTO will *sua sponte* issue a certificate of correction reflecting the amount of PTA days determined by the recalculation.

Prior to the issuance of the certificate of correction, the USPTO will afford patentee an opportunity to be heard and request reconsideration. Accordingly, patentee has **one month or thirty (30) days**, whichever is longer, to file a request for reconsideration of this patent term adjustment calculation. See 35 U.S.C. 154(b)(3)(B)(ii) and 37 CFR 1.322(a)(4). No extensions of time will be granted under 37 CFR 1.136.

Patentee should use document code PET.OP if electronically filing a request for reconsideration of this patent term adjustment calculation. The patentee must also include the information required by 37 CFR 1.705(b)(2) and the fee required by 37 CFR 1.18(e). If patentee does not file a timely request for reconsideration of this patent term adjustment calculation including the information required by 37 CFR 1.705(b)(2) and the fee required by 37 CFR 1.18(e), the USPTO will issue a certificate of correction reflecting the PTA determination noted above.

Patentee should be aware that in order to preserve the right to review in the United States District Court for the District of Columbia of the USPTO patent term adjustment determination, patentee must ensure that he or she also take the steps required under 35 U.S.C. 154(b)(4)(A) in a timely manner. Nothing in the request for recalculation should be construed as providing an alternative time frame for commencing a civil action under 35 U.S.C. 154(b)(4)(A).

Any questions concerning this decision should be directed to the Office of Patent Legal Administration at 571-272-7702.

UNITED STATES PATENT AND TRADEMARK OFFICE

UNITED STATES DEPARTMENT OF COMMERCE
United States Patent and Trademark Office
Address: COMMISSIONER FOR PATENTS
P.O. Box 1450
Alexandria, Virginia 22313-1450
www.uspto.gov

Ridout & Maybee LLP
225 King Street West
10th Floor
Toronto, ON M5V 3M2
CANADA

Mail Date: 04/20/2010

Applicant	: Sean David Drew Wilson	: DECISION ON REQUEST FOR
Patent Number	: 7607105	: RECALCULATION of PATENT
Issue Date	: 10/20/2009	: TERM ADJUSTMENT IN VIEW
Appliction No	: 11/420,250	: OF WYETH AND NOTICE OF INTENT TO
Filed	: 05/25/2006	: ISSUE CERTIFICATE OF CORRECTION
		:

The Request for Recalculation is **GRANTED** to the extent indicated.

The patent term adjustment has been determined to be **583** days. The USPTO will *sua sponte* issue a certificate of correction reflecting the amount of PTA days determined by the recalculation.

Prior to the issuance of the certificate of correction, the USPTO will afford patentee an opportunity to be heard and request reconsideration. Accordingly, patentee has **one month or thirty (30) days**, whichever is longer, to file a request for reconsideration of this patent term adjustment calculation. See 35 U.S.C. 154(b)(3)(B)(ii) and 37 CFR 1.322(a)(4). No extensions of time will be granted under 37 CFR 1.136.

Patentee should use document code PET.OP if electronically filing a request for reconsideration of this patent term adjustment calculation. The patentee must also include the information required by 37 CFR 1.705(b)(2) and the fee required by 37 CFR 1.18(e). If patentee does not file a timely request for reconsideration of this patent term adjustment calculation including the information required by 37 CFR 1.705(b)(2) and the fee required by 37 CFR 1.18(e), the USPTO will issue a certificate of correction reflecting the PTA determination noted above.

Patentee should be aware that in order to preserve the right to review in the United States District Court for the District of Columbia of the USPTO patent term adjustment determination, patentee must ensure that he or she also take the steps required under 35 U.S.C. 154(b)(4)(A) in a timely manner. Nothing in the request for recalculation should be construed as providing an alternative time frame for commencing a civil action under 35 U.S.C. 154(b)(4)(A).

Any questions concerning this decision should be directed to the Office of Patent Legal Administration at 571-272-7702.

UNITED STATES PATENT AND TRADEMARK OFFICE

UNITED STATES DEPARTMENT OF COMMERCE
United States Patent and Trademark Office
Address: COMMISSIONER FOR PATENTS
P.O. Box 1450
Alexandria, Virginia 22313-1450
www.uspto.gov

Ridout & Maybee LLP
225 King Street West
10th Floor
Toronto, ON M5V 3M2
CANADA

Mail Date: 05/17/2010

Applicant : Sean David Drew Wilson
Patent Number : 7607105
Issue Date : 10/20/2009
Application No : 11/420,250
Filed : 05/25/2006

: NOTICE CONCERNING IMPROPER
: CALCULATION OF PATENT TERM
: ADJUSTMENT BASED UPON USPTO
: IMPROPERLY MEASURING REDUCTION
: PERIOD UNDER 37 CFR 1.704(c)(10).

The United States Patent and Trademark Office (USPTO) discovered that in processing the recent recalculation decisions mailed in response to patentee's filed Request for Recalculation of Patent Term Adjustment in view of Wyeth, the USPTO improperly measured the reduction period for reductions under 37 CFR 1.704(c)(10). Pursuant to 37 CFR 1.704(c)(10), patentee's reduction begins on the date of filing the amendment under 37 CFR 1.312 ("1.312 amendment") or other related paper and ends on the date that the Office mails a response to the filing of the 1.312 amendment or other paper. It has been discovered that during the recalculation, the calculation failed to the limit the reduction to the mail date of the response to the 1.312 amendment or other paper. Accordingly, patentee's reductions were greater than warranted.

This notice **VACATES** the previous GRANTED request for recalculation and provides patentee with a revised GRANTED recalculation.

The patent term adjustment has been determined to be **611** days. The USPTO will *sua sponte* issue a certificate of correction reflecting the amount of patent term adjustment (PTA) days determined by the recalculation.

Prior to the issuance of the certificate of correction, the USPTO will afford patentee an opportunity to be heard and request reconsideration. Accordingly, patentee has **one month or thirty (30) days** from the mail date of this notice, whichever is longer, to file a request for reconsideration of this PTA calculation. See 35 U.S.C. § 154(b)(3)(B)(ii) and 37 CFR 1.322(a)(4).

Patentee should use document code PET.OP if electronically filing a request for reconsideration of this PTA calculation. The patentee must also include the information required by 37 CFR 1.705(b)(2), and the fee required by 37 CFR 1.18(e). If patentee does not file a timely request for reconsideration of this PTA calculation, including the information required by 37 CFR 1.705(b)(2) and the fee required by 37 CFR 1.18(e), the USPTO will issue a certificate of correction reflecting the PTA determination noted above.

Patentee should be aware that in order to preserve the right of review of the USPTO's PTA determination in the United States District Court for the District of Columbia, patentee must ensure that the steps required under 35 U.S.C. § 154 (b)(4) are taken in a timely manner. Nothing in the request for recalculation should be construed as providing an alternative time frame for commencing a civil action under 35 U.S.C. § 154(b)(4).

UNITED STATES PATENT AND TRADEMARK OFFICE

UNITED STATES DEPARTMENT OF COMMERCE
United States Patent and Trademark Office
Address: COMMISSIONER FOR PATENTS
P.O. Box 1450
Alexandria, Virginia 22313-1450
www.uspto.gov

MICHAEL BEST & FRIEDRICH LLP
100 E WISCONSIN AVENUE
Suite 3300
MILWAUKEE, WI 53202

Mail Date: 04/21/2010

Applicant	: Dan M. Ionel	: DECISION ON REQUEST FOR
Patent Number	: 7638913	: RECALCULATION of PATENT
Issue Date	: 12/29/2009	: TERM ADJUSTMENT IN VIEW
Appliction No	: 11/420,256	: OF WYETH AND NOTICE OF INTENT TO
Filed	: 05/25/2006	: ISSUE CERTIFICATE OF CORRECTION
		:

The Request for Recalculation is **GRANTED** to the extent indicated.

The patent term adjustment has been determined to be **800** days. The USPTO will *sua sponte* issue a certificate of correction reflecting the amount of PTA days determined by the recalculation.

Prior to the issuance of the certificate of correction, the USPTO will afford patentee an opportunity to be heard and request reconsideration. Accordingly, patentee has **one month or thirty (30) days**, whichever is longer, to file a request for reconsideration of this patent term adjustment calculation. See 35 U.S.C. 154(b)(3)(B)(ii) and 37 CFR 1.322(a)(4). No extensions of time will be granted under 37 CFR 1.136.

Patentee should use document code PET.OP if electronically filing a request for reconsideration of this patent term adjustment calculation. The patentee must also include the information required by 37 CFR 1.705(b)(2) and the fee required by 37 CFR 1.18(e). If patentee does not file a timely request for reconsideration of this patent term adjustment calculation including the information required by 37 CFR 1.705(b)(2) and the fee required by 37 CFR 1.18(e), the USPTO will issue a certificate of correction reflecting the PTA determination noted above.

Patentee should be aware that in order to preserve the right to review in the United States District Court for the District of Columbia of the USPTO patent term adjustment determination, patentee must ensure that he or she also take the steps required under 35 U.S.C. 154(b)(4)(A) in a timely manner. Nothing in the request for recalculation should be construed as providing an alternative time frame for commencing a civil action under 35 U.S.C. 154(b)(4)(A).

Any questions concerning this decision should be directed to the Office of Patent Legal Administration at 571-272-7702.

UNITED STATES PATENT AND TRADEMARK OFFICE

Commissioner for Patents
United States Patent and Trademark Office
P.O. Box 1450
Alexandria, VA 22313-1450
www.uspto.gov

CICHOSZ & CICHOSZ, PLLC
129 E. COMMERCE
MILFORD MI 48381

COPY MAILED

OCT 28 2008

OFFICE OF PETITIONS

In re Application of	:	
Sah et al.	:	
Application No. 11/420,257	:	DECISION ON PETITION
Filed: May 25, 2006	:	
Attorney Docket No. GP-308397-PTH-CD	:	

This is a decision on the petition under the unintentional provisions of 37 CFR 1.137(b), filed March 31, 2008, to revive the above-identified application.

The petition is **GRANTED**.

This application became abandoned for failure to timely reply to the final Office action mailed July 25, 2007. No extensions of time under the provisions of 37 CFR 1.136(a) were obtained. Accordingly, this application became abandoned on October 26, 2007. A Notice of Abandonment was mailed March 10, 2008.

The petition satisfies the requirements of 37 CFR 1.137(b) in that petitioner has supplied (1) the reply in the form of a Request for Continued Examination (RCE) and fee of $810.00, and the submission required by 37 CFR 1.114; (2) the petition fee of $1,540.00; and (3) a proper statement of unintentional delay.

It is not apparent whether the statement of unintentional delay was signed by a person who would have been in a position of knowing that the entire delay in filing the required reply from the due date for the reply until the filing of a grantable petition pursuant to 37 CFR 1.137(b) was unintentional. Nevertheless, in accordance with 37 CFR 10.18, the statement is accepted as constituting a certification of unintentional delay. However, in the event that petitioner has no knowledge that the delay was unintentional, petitioner must make such an inquiry to ascertain that, in fact, the delay was unintentional. If petitioner discovers that the delay was intentional, petitioner must notify the Office.

Additionally, the request for change of correspondence address has been accepted.

Telephone inquiries concerning this decision should be directed to Joan Olszewski at (571) 272-7751.

This application is being referred to Technology Center AU 3664 for processing of the RCE and for appropriate action by the Examiner in the normal course of business on the amendment submitted in accordance with 37 CFR 1.114.

/Liana Walsh/
Liana Walsh
Petitions Examiner
Office of Petitions

UNITED STATES PATENT AND TRADEMARK OFFICE

7-9-09

Commissioner for Patents
United States Patent and Trademark Office
P.O. Box 1450
Alexandria, VA 22313-1450
www.uspto.gov

Patent No. : 7,508,295
Ser. No. : 11/420,277
Inventor(s) : Alfons Graf, et. al.
Issued : March 24, 2009

Re: Request for Certificate of Correction

Consideration has been given your request for the issuance of a certificate of correction for the above-identified patent under the provisions of Rule(s) 1.322.

Assignees' names and addresses (assignment data) printed in a patent, are based *solely* on information supplied in the appropriate space for identifying the assignment data, i.e., item 3 of the Issue Fee Transmittal Form PTOL-85B. Granting of a request under 37 CFR 3.81(b) is required to correct applicant's error providing ***incorrect or erroneous*** assignment data, *before* issuance of a Certificate of Correction, under 37 CFR 1.323 *(see Manual of Patent Examining Procedures (M.P.E.P) Chp.1400, sect. 1481).* This procedure is required *at any time after the issue fee is paid*, including after issuance of the patent.

In view of the foregoing, your request is hereby denied.

A request to correct the Assignee under 37 CFR 3.81(b) should include:

A. **the processing fee set forth in 37 CFR 1.117(h) (currently $130);**
B. a statement that the failure to include the correct assignee name on the PTOL-85B was inadvertent; and
C. a copy of the Notice of Recordation of Assignment Document, reflecting the reel and frame number where the assignment(s) is recorded and/or reflecting proof of *the date* the assignment was submitted for recordation.

In the Request, Applicant(s) may request that the file be forwarded to Certificates of Correction Branch, for issuance of a Certificate of Correction, if the Request is granted.

Any request under 37 CFR 3.81(b) should be directed to the following address or facsimile number:

By mail: Mail Stop PETITIONS
Commissioner for Patents
Post Office Box 1450
Alexandria, VA 22313-1450

By hand: Customer Service Window
Mail Stop Petitions
Randolph Building
401 Dulany Street
Alexandria, VA 22314

By fax: (703) 872-9306
ATTN: Office of Petitions

If a fee (currently $100) was previously submitted for consideration of a Request for Certificate of Correction, under CFR 1.323, to correct assignment data no additional fee is required.

Eva James
For Mary Diggs
Decisions & Certificates
of Correction Branch
(703) 756-1583 or 1580

Eschweiler & Associates, LLC
National City Bank Building
629 Euclid Avenue, Suite 1000
Cleveland, Ohio 44114

ej

UNITED STATES PATENT AND TRADEMARK OFFICE

Commissioner for Patents
United States Patent and Trademark Office
P.O. Box 1450
Alexandria, VA 22313-1450
www.uspto.gov

ESCHWEILER & ASSOCIATES LLC
629 EUCLID AVENUE, SUITE 1000
NATIONAL CITY BUILDING
CLEVELAND OH 44114

COPY MAILED

AUG 04 2009

OFFICE OF PETITIONS

In re Patent No. 7,508,295	:	
Issue Date: March 24, 2009	:	
Application No. 11/420,277	:	DECISION ON PETITION
Filed: May 25, 2006	:	
Attorney Docket No. SZP119US	:	

This is a decision on the petition, filed, July 06, 2009, which is being treated as a request under 37 CFR 3.81(b)[1] to correct the assignee's name on the Fee(s) Transmittal form PTOL-85(b) by way of a certificate of correction in the patent to be issued from the above-identified application.

The request is **GRANTED**.

Petitioner states that the assignees names are "Infineon Technologies AG and Fraunhofer-Gesellschaft zur Foerderung der angewandten Forschung e. V., Muenchen (DE)" and that both assignees names were not included on the Fee(s) Transmittal form PTOL-85(b) at the time of payment of the issue fee. Accordingly, petitioner requests that a certificate of correction be issued to reflect the correct assignee on the front page of the Letters Patent in the patent to be issued from the application.

37 CFR 3.81(b), effective June 25, 2004, reads:

> *After payment of the issue fee:* Any request for issuance of an application in the name of the assignee submitted after the date of payment of the issue fee, and any request for a patent to be corrected to state the name of the assignee, must state that the assignment was submitted for recordation as set forth in § 3.11 before issuance of the patent, and must include a request for a certificate of correction under § 1.323 of this chapter (accompanied by the fee set forth in § 1.20(a) and the processing fee set forth in § 1.17(i) of this chapter.

[1] *See* MPEP 1309, subsection II; and Official Gazette of June 22, 2004.

The request was accompanied by a certificate of correction (and fee) as required by 3.81(b). Further, Office assignment records reflect that "Infineon Technologies AG and Fraunhofer-Gesellschaft zur Foerderung der angewandten Forschung e. V., Muenchen (DE)" are the assignees of record. Accordingly, as the request complies with the provisions of 37 CFR 3.81(b), it would be appropriate for a certificate of correction to be processed after issuance of this application into a patent.

Inquiries concerning this decision should be directed to the Michelle R. Eason at (571) 272-4231. Any questions concerning the issuance of a certificate of correction should be directed to the Certificates of Correction Branch at (571) 272-4200.

This matter is being referred to the Certificates of Correction Branch for processing of a certificate of correction after issuance of this application into a patent.

Thurman Page
Petitions Examiner
Office of Petitions

UNITED STATES PATENT AND TRADEMARK OFFICE

Commissioner for Patents
United States Patent and Trademark Office
P.O. Box 1450
Alexandria, VA 22313-1450
www.uspto.gov

ESCHWEILER & ASSOCIATES LLC
629 EUCLID AVENUE, SUITE 1000
NATIONAL CITY BUILDING
CLEVELAND OH 44114

COPY MAILED

AUG 04 2009

OFFICE OF PETITIONS

In re Patent No. 7,554,432	:	
Issue Date: June 30, 2009	:	
Application No. 11/420,280	:	DECISION ON PETITION
Filed: May 25, 2006	:	
Attorney Docket No. SZP120US	:	

This is a decision on the petition, filed, July 06, 2009, which is being treated as a request under 37 CFR 3.81(b)[1] to correct the assignee's name on the Fee(s) Transmittal form PTOL-85(b) by way of a certificate of correction in the patent to be issued from the above-identified application.

The request is **GRANTED**.

Petitioner states that the assignees names are "Infineon Technologies AG and Fraunhofer-Gesellschaft zur Foerderung der angewandten Forschung e. V., Muenchen (DE)" and that both assignees names were not included on the Fee(s) Transmittal form PTOL-85(b) at the time of payment of the issue fee. Accordingly, petitioner requests that a certificate of correction be issued to reflect the correct assignee on the front page of the Letters Patent in the patent to be issued from the application.

37 CFR 3.81(b), effective June 25, 2004, reads:

> *After payment of the issue fee:* Any request for issuance of an application in the name of the assignee submitted after the date of payment of the issue fee, and any request for a patent to be corrected to state the name of the assignee, must state that the assignment was submitted for recordation as set forth in § 3.11 before issuance of the patent, and must include a request for a certificate of correction under § 1.323 of this chapter (accompanied by the fee set forth in § 1.20(a) and the processing fee set forth in § 1.17(i) of this chapter.

[1] *See* MPEP 1309, subsection II; and Official Gazette of June 22, 2004.

The request was accompanied by a certificate of correction (and fee) as required by 3.81(b). Further, Office assignment records reflect that "Infineon Technologies AG and Fraunhofer-Gesellschaft zur Foerderung der angewandten Forschung e. V., Muenchen (DE)" are the assignees of record. Accordingly, as the request complies with the provisions of 37 CFR 3.81(b), it would be appropriate for a certificate of correction to be processed after issuance of this application into a patent.

Inquiries concerning this decision should be directed to the Michelle R. Eason at (571) 272-4231. Any questions concerning the issuance of a certificate of correction should be directed to the Certificates of Correction Branch at (571) 272-4200.

This matter is being referred to the Certificates of Correction Branch for processing of a certificate of correction after issuance of this application into a patent.

Thurman K. Page

Thurman Page
Petitions Examiner
Office of Petitions

UNITED STATES PATENT AND TRADEMARK OFFICE

Commissioner for Patents
United States Patent and Trademark Office
P.O. Box 1450
Alexandria, VA 22313-1450
www.uspto.gov

ESCHWEILER & ASSOCIATES LLC
629 EUCLID AVENUE, SUITE 1000
NATIONAL CITY BUILDING
CLEVELAND OH 44114

COPY MAILED

AUG 04 2009

OFFICE OF PETITIONS

In re Patent No. 7,504,925	:	
Issue Date: March 17, 2009	:	
Application No. 11/420,286	:	DECISION ON PETITION
Filed: May 25, 2006	:	
Attorney Docket No. SZP121US	:	

This is a decision on the petition, filed, July 06, 2009, which is being treated as a request under 37 CFR 3.81(b)[1] to correct the assignee's name on the Fee(s) Transmittal form PTOL-85(b) by way of a certificate of correction in the patent to be issued from the above-identified application.

The request is **GRANTED**.

Petitioner states that the assignees names are "Infineon Technologies AG and Fraunhofer-Gesellschaft zur Foerderung der angewandten Forschung e. V., Muenchen (DE)" and that both assignees names were not included on the Fee(s) Transmittal form PTOL-85(b) at the time of payment of the issue fee. Accordingly, petitioner requests that a certificate of correction be issued to reflect the correct assignee on the front page of the Letters Patent in the patent to be issued from the application.

37 CFR 3.81(b), effective June 25, 2004, reads:

> *After payment of the issue fee:* Any request for issuance of an application in the name of the assignee submitted after the date of payment of the issue fee, and any request for a patent to be corrected to state the name of the assignee, must state that the assignment was submitted for recordation as set forth in § 3.11 before issuance of the patent, and must include a request for a certificate of correction under § 1.323 of this chapter (accompanied by the fee set forth in § 1.20(a) and the processing fee set forth in § 1.17(i) of this chapter.

[1] *See* MPEP 1309, subsection II; and Official Gazette of June 22, 2004.

The request was accompanied by a certificate of correction (and fee) as required by 3.81(b). Further, Office assignment records reflect that "Infineon Technologies AG and Fraunhofer-Gesellschaft zur Foerderung der angewandten Forschung e. V., Muenchen (DE)" are the assignees of record. Accordingly, as the request complies with the provisions of 37 CFR 3.81(b), it would be appropriate for a certificate of correction to be processed after issuance of this application into a patent.

Inquiries concerning this decision should be directed to the Michelle R. Eason at (571) 272-4231. Any questions concerning the issuance of a certificate of correction should be directed to the Certificates of Correction Branch at (571) 272-4200.

This matter is being referred to the Certificates of Correction Branch for processing of a certificate of correction after issuance of this application into a patent.

Thurman Page
Petitions Examiner
Office of Petitions

UNITED STATES PATENT AND TRADEMARK OFFICE

COMMISSIONER FOR PATENTS
UNITED STATES PATENT AND TRADEMARK OFFICE
P.O. BOX 1450
ALEXANDRIA, VA 22313-1450
WWW.USPTO.GOV

Paper No. None

SONNENSCHEIN NATH & ROSENTHAL LLP
P.O. BOX 061080
WACKER DRIVE STATION, SEARS TOWER
CHICAGO IL 60606-1080

COPY MAILED
MAR 09 2007
OFFICE OF PETITIONS

In re Application of Hironobu Mori Application No. 11/420,290 Filed: May 25, 2006 Attorney Docket No.: 792909-6670 Title: STORAGE DEVICE AND SEMICONDUCTOR APPARATUS	DECISION ON PETITION PURSUANT TO 37 C.F.R. §1.57

This is a decision on the petition filed July 20, 2006, pursuant to 37 C.F.R. §1.57, requesting that the above-identified application, including Figure 1, be accorded a filing date of May 25, 2006, as part of the original disclosure.

The application was deposited on May 25, 2006. However, on June 2, 2006, the Office of Initial Patent Examination (OIPE) mailed a "Notice to File Milling Parts of Nonprovisional Application" (notice), stating that the application had been accorded a filing date, and advising applicants that Figure 1 appeared to have been omitted on filing. The notice further indicated that an executed oath or declaration would be required, along with the associated surcharge. The notice set a two-month period of reply.

In response, on July 20, 2006, applicants filed the present petition. Petitioner has included, *inter alia*, the petition fee, an executed declaration as well as the associated surcharge, and a sheet of drawings containing Figure 1.

It is noted in passing that the declaration contains the work address for each of the three inventors.

Petitioner has filed this petition, seeking the entry of Figure 1, and has requested that it be accorded a filing date of May 25, 2006, as part of the original disclosure. However, Petitioner is advised that a petition is not necessary in this instance to add the omitted figure.

Rule §1.57(a) provides a method whereby an applicant may amend an application to include an inadvertently omitted portion of the specification or drawing(s). However, where a filing date has been accorded to an application, a petition is not necessary to add the omitted portion of the specification or drawing(s); Rule §1.57(a)(3) sets forth, *in toto*:

> If an application is not otherwise entitled to a filing date under § 1.53(b) (emphasis added), the amendment must be by way of a petition pursuant to this paragraph accompanied by the fee set forth in § 1.17(f).

Furthermore, MPEP §201.06(IV)(B) sets forth, *in toto*:

> If a continuation or divisional application as originally filed on or after September 21, 2004 does not include an explicit incorporation by reference statement and is entitled to a filing date despite the inadvertent omission of a portion of the prior application(s), applicant may be permitted to add the omitted material by way of an amendment under 37 CFR 1.57(a). Such an amendment must be made within any time period set by the Office. See 37 CFR 1.57(a)(1).
>
> If an application as originally filed included a proper explicit incorporation by reference statement (or an explicit incorporation by reference statement that has been made effective under 37 CFR 1.57(g)), the omitted specification page(s) and/or drawing figure(s) may be added by amendment provided the omitted item(s) contains only subject matter in common with a document that has been properly incorporated by reference. If the Office identified the omitted item(s) in a "Notice of Omitted Item(s)," applicant need not respond to the "Notice of Omitted Item(s)." Applicant should, however, submit the amendment adding the omitted material prior to the first Office action to avoid delays in the prosecution of the application (emphasis added). See MPEP § 601.01(d) and § 601.01(g).

Since the present application has been accorded a filing date, it follows that the present petition must be **DISMISSED AS UNNECESSARY.**

The application has been accorded a filing date of May 25, 2006. However, Figure 1, submitted with the present petition, will not be entered at the present time. If Petitioner desires for the Examiner to consider the missing page that was not submitted as part of the original disclosure, then Petitioner may submit this

page via an amendment pursuant to Rule § 1.57, and without a petition. Any such amendment will, of course, be reviewed by the examiner for new matter[1]. The amendment is not new matter if the substance was a part of the disclosure of the prior application. The Office herein notes the filing of the amendment concurrently with this petition on July 20, 2006.

The original application papers will include only those application papers present on the date of deposit.

The petition fee of $400 will not be refunded, as this petition was not necessitated by any error on the part of the Office.

OIPE will be notified of this decision, so that the present application can receive further processing with a filing date of May 25, 2006, using only the application papers filed on that date. OIPE will then notify the Examiner of this decision, so that the amendment that was received with the present petition can be processed.

The general phone number for the Office of Petitions which should be used for status requests is (571) 272-3282. Telephone inquiries regarding this decision should be directed to Senior Attorney Paul Shanoski at (571) 272-3225.

Charles Pearson
Director
Office of Petitions
United States Patent and Trademark Office

1 See MPEP 608.02(a).

UNITED STATES PATENT AND TRADEMARK OFFICE

Commissioner for Patents
United States Patent and Trademark Office
P.O. Box 1450
Alexandria, VA 22313-1450
www.uspto.gov

BRIAN ROFFE, ESQ
11 SUNRISE PLAZA, SUITE 303
VALLEY STREAM NY 11580-6111

COPY MAILED

NOV 0 1 2006

OFFICE OF PETITIONS

In re Application of

JOHNSON, et al.
Application No. 11/420,297
Filed: May 25, 2006
Attorney Docket No. ATI-402

DECISION ON PETITION
TO MAKE SPECIAL UNDER
37 CFR 1.102(c)(1)

This is a decision on the petition under 37 CFR 1.102(c)(1), filed August 28, 2006, to make the above-identified application special based on applicant's age as set forth in M.P.E.P. § 708.02, Section IV.

The petition is **GRANTED**.

A grantable petition to make an application special under 37 CFR 1.102(c)(1) and MPEP § 708.02, Section IV: Applicant's Age, must be accompanied by evidence showing that at least one of the applicants is 65 years of age, or more, such as a birth certificate or a statement by applicant. No fee is required.

The evidence submitted with the instant petition is a copy of Mr. Breed's Passport indicating that he is over 65 years of age. Accordingly, the above-identified application has been accorded "special" status.

Telephone inquiries concerning this decision should be directed to Patricia Volpe at 571-272-6825.

All other inquiries concerning either the examination or status of the application should be directed to the Technology Center.

The application is being forwarded to the Technology Center Art Unit 3661 for action on the merits commensurate with this decision.

Volpe for

David Bucci
Petitions Examiner
Office of Petitions

UNITED STATES PATENT AND TRADEMARK OFFICE

UNITED STATES DEPARTMENT OF COMMERCE
United States Patent and Trademark Office
Address: COMMISSIONER FOR PATENTS
P.O. Box 1450
Alexandria, Virginia 22313-1450
www.uspto.gov

FITCH EVEN TABIN & FLANNERY
120 SOUTH LASALLE STREET
SUITE 1600
CHICAGO, IL 60603-3406

Mail Date: 04/21/2010

Applicant	: Shigeru Kohama	: DECISION ON REQUEST FOR
Patent Number	: 7568265	: RECALCULATION of PATENT
Issue Date	: 08/04/2009	: TERM ADJUSTMENT IN VIEW
Appliction No	: 11/420,311	: OF WYETH AND NOTICE OF INTENT TO
Filed	: 05/25/2006	: ISSUE CERTIFICATE OF CORRECTION
		:

The Request for Recalculation is **GRANTED** to the extent indicated.

The patent term adjustment has been determined to be **491** days. The USPTO will *sua sponte* issue a certificate of correction reflecting the amount of PTA days determined by the recalculation.

Prior to the issuance of the certificate of correction, the USPTO will afford patentee an opportunity to be heard and request reconsideration. Accordingly, patentee has **one month or thirty (30) days**, whichever is longer, to file a request for reconsideration of this patent term adjustment calculation. See 35 U.S.C. 154(b)(3)(B)(ii) and 37 CFR 1.322(a)(4). No extensions of time will be granted under 37 CFR 1.136.

Patentee should use document code PET.OP if electronically filing a request for reconsideration of this patent term adjustment calculation. The patentee must also include the information required by 37 CFR 1.705(b)(2) and the fee required by 37 CFR 1.18(e). If patentee does not file a timely request for reconsideration of this patent term adjustment calculation including the information required by 37 CFR 1.705(b)(2) and the fee required by 37 CFR 1.18(e), the USPTO will issue a certificate of correction reflecting the PTA determination noted above.

Patentee should be aware that in order to preserve the right to review in the United States District Court for the District of Columbia of the USPTO patent term adjustment determination, patentee must ensure that he or she also take the steps required under 35 U.S.C. 154(b)(4)(A) in a timely manner. Nothing in the request for recalculation should be construed as providing an alternative time frame for commencing a civil action under 35 U.S.C. 154(b)(4)(A).

Any questions concerning this decision should be directed to the Office of Patent Legal Administration at 571-272-7702.

UNITED STATES PATENT AND TRADEMARK OFFICE

Commissioner for Patents
United States Patent and Trademark Office
P.O. Box 1450
Alexandria, VA 22313-1450
www.uspto.gov

SHELL OIL COMPANY
P O BOX 2463
HOUSTON TX 77252-2463

COPY MAILED

MAR 1 6 2009

OFFICE OF PETITIONS

In re Application of

Aikhorin, et al. :

Application No. 11/420,319

: DECISION ON PETITION

Filed: May 25, 2006

:

Attorney Docket No. TS8609(US)

This is a decision on the petition under 37 CFR 1.137(b), filed February 11, 2009

The petition is **GRANTED**.

The above-cited application became abandoned for failure to reply in a timely manner to the non-final Office action mailed May 13, 2008, which set a period for reply of three (3) months from its mailing date. No extension of time pursuant to 37 CFR 1.136(a) was obtained within the allowable period. Accordingly, the application became abandoned on August 14, 2008. A Notice of Abandonment was mailed on March 9, 2009.

The amendment filed February 11, 2009, is noted.

The request for an extension of time within the third month is noted, but cannot be granted as the request was made outside the maximum statutory period for reply to the non-final Office action. The amount of $1,110.00 will be refunded to deposit account 19-1800.

The application is being forwarded to Technology Center 3700, GAU 3744 for further processing.

Telephone inquiries concerning this decision should be directed to the undersigned at (571) 272-3222.

Kenya A. McLaughlin
Petitions Attorney
Office of Petitions

UNITED STATES PATENT AND TRADEMARK OFFICE

Commissioner for Patents
United States Patent and Trademark Office
P.O. Box 1450
Alexandria, VA 22313-1450
www.uspto.gov

ALSTON & BIRD, LLP
BANK OF AMERICA PLAZA
101 SOUTH TRYON STREET, SUITE 4000
CHARLOTTE, NC 28280-4000

COPY MAILED
FEB 26 2010

In re Application of	:	
Michael Anthony Colabucci	:	
Application No. 11/420,326	:	DECISION ON PETITION
Filed: May 25, 2006	:	TO WITHDRAW FROM
Attorney Docket No. 053798/343940	:	RECORD

This is a decision on the Request to Withdraw as attorney or agent of record under 37 CFR §§ 1.36(b) or 10.40 filed December 16, 2009.

The request is **APPROVED**.

The request was signed by Brian C. Ellsworth on behalf of himself and all attorneys/agents and associated with Customer No. 00826. Therefore, Brian C. Ellsworth and all the attorneys/agents associated with Customer No. 00826 have been withdrawn.

Applicant is reminded that there are no attorneys/agents of record at this time.

This application file is being referred to Technology Center Art Unit 3693, to await the filing of an Appeal Brief and fee or some other action to be filed within two months of the Notice of Appeal filed on August 28, 2009[1].

All future communications from the Office will be directed to the intervening assignee at the address listed below until otherwise properly notified by the applicant.

Telephone inquiries concerning this decision should be directed to the undersigned at (571) 272-3226.

Andrea Smith
Petitions Examiner
Office of Petitions

cc: Finance and Compliance Solutions
c/o Rocky Robinson
9385 Washington Blvd.
Laurel, MD 20723

[1] Extensions of time are permitted under 37 CFR 1.136.

UNITED STATES PATENT AND TRADEMARK OFFICE

UNITED STATES DEPARTMENT OF COMMERCE
United States Patent and Trademark Office
Address: COMMISSIONER FOR PATENTS
PO Box 1450
Alexandria, Virginia 22313-1450
www.uspto.gov

APPLICATION NUMBER	FILING OR 371(C) DATE	FIRST NAMED APPLICANT	ATTY. DOCKET NO./TITLE
11/420,326	05/25/2006	Michael Anthony Colabucci	053798/343940

CONFIRMATION NO. 1843

POWER OF ATTORNEY NOTICE

826
ALSTON & BIRD LLP
BANK OF AMERICA PLAZA
101 SOUTH TRYON STREET, SUITE 4000
CHARLOTTE, NC 28280-4000

OC000000040202882

Date Mailed: 02/22/2010

NOTICE REGARDING CHANGE OF POWER OF ATTORNEY

This is in response to the Power of Attorney filed 12/16/2009.

- The withdrawal as attorney in this application has been accepted. Future correspondence will be mailed to the new address of record. 37 CFR 1.33.

/amsmith/

Office of Data Management, Application Assistance Unit (571) 272-4000, or (571) 272-4200, or 1-888-786-0101

UNITED STATES PATENT AND TRADEMARK OFFICE

Commissioner for Patents
United States Patent and Trademark Office
P.O. Box 1450
Alexandria, VA 22313-1450
www.uspto.gov

FISH & RICHARDSON P.C.
P.O. BOX 1022
MINNEAPOLIS, MN 55440-1022

MAILED

JAN 22 2009

OFFICE OF PETITIONS

In re Application of
Atsuo Isobe
Application No. 11/420,329
Filed: May 25, 2006
Atty Docket No.: 12732-350001

ON PETITION

This is a decision on the petition, filed January 21, 2009, under 37 CFR 1.313(c)(2) to withdraw the above-identified application from issue after payment of the issue fee.

The petition is **GRANTED**.

The above-identified application is withdrawn from issue for consideration of a submission under 37 CFR 1.114 (request for continued examination). See 37 CFR 1.313(c)(2).

Petitioner is advised that the issue fee paid on January 8, 2009, in the above-identified application, cannot be refunded. If, however, the above-identified application is again allowed, petitioner may request that it be applied towards the issue fee required by the new Notice of Allowance. [1]

It is noted that the address given on the petition differs from the address of record. If appropriate, a change of address should be filed in this case in accordance with MPEP 601.03. A courtesy copy of this decision is being mailed to the address noted on the petition. However, until otherwise instructed, all future correspondence regarding this application will be mailed solely to the address of record.

Telephone inquiries relating to this decision should be directed to the undersigned at (571) 272-3204.

---

[1] *The request to apply the issue fee to the new Notice may be satisfied by completing and returning the new Part B – Fee(s) Transmittal Form (along with any balance due at the time of submission). Petitioner is advised that the Issue Fee Transmittal Form must be completed and timely submitted to avoid abandonment of the application.*

The application is being referred to Technology Center AU 2895 for further processing of the Request for Continued Examination under 37 CFR 1.114 and for consideration of the concurrently filed Information Disclosure Statement (IDS).

/SDB/

Sherry D. Brinkley
Petitions Examiner
Office of Petitions

cc: ANDREW T. FOY
FISH & RICHARDSON
1425 K STREET, N.W.
11TH FLOOR
WASHINGTON, DC 20005-3500

UNITED STATES PATENT AND TRADEMARK OFFICE

Commissioner for Patents
United States Patent and Trademark Office
P.O. Box 1450
Alexandria, VA 22313-1450
www.uspto.gov

GREENBLUM & BERNSTEIN, P.L.C.
1950 ROLAND CLARKE PLACE
RESTON VA 20191

In re Application of: MAEHIRO et al.
Application No. 11/420,334
Filed: May 25, 2006
For: SCROLL CONTROL ACCORDING TO INPUT OF CURSOR MOVEMENT

REQUEST TO PARTICIPATE IN PATENT PROSECUTION HIGHWAY PILOT PROGRAM AND PETITION TO MAKE SPECIAL UNDER 37 CFR 1.102(d)

This is a decision on the request to participate in the Patent Prosecution Highway (PPH) pilot program and the petition under 37 CFR 1.102(d), filed September 29, 2008, to make the above-identified application special.

The petition is **DENIED**.

A grantable request to participate in the PPH pilot program and petition to make special require:

(1) The U.S. application must validly claim priority under 35 U.S.C. 119(a) to one or more applications filed in the JPO;

(2) Applicant must submit a copy of the allowable/patentable claim(s) from the JPO application(s) along with an English translation thereof and a statement that the English translation is accurate;

(3) All the claims in the U.S. application must sufficiently correspond or be amended to sufficiently correspond to the allowable/patentable claim(s) in the JPO application(s);

(4) Examination of the U.S. application has not begun;

(5) Applicant must submit a copy of all the office actions from each of the JPO application(s) containing the allowable/patentable claim(s) along with an English translation thereof and a statement that the English translation is accurate;

(6) Applicant must submit an IDS listing the documents cited by the JPO examiner in the JPO office action along with copies of documents except U.S. patents or U.S. patent application publications; and

(7) The required petition fee under 37 CFR 1.17(h).

The request to participate in the PPH pilot program and petition failed item (4) above, since a first action on the merits was mailed to applicants on October 3, 2008.

Therefore, the Petition is **DENIED**.

Telephone inquiries concerning this decision should be directed to Mano Padmanabhan at 571-272-4210.

All other inquiries concerning the examination or status of the application should be directed to Patent Application Information Retrieval (PAIR) system.

/Mano Padmanabhan/

Mano Padmanabhan
Quality Assurance Specialist, Technology Center 2100, Workgroup 2180
571-272-4210

UNITED STATES PATENT AND TRADEMARK OFFICE

UNITED STATES DEPARTMENT OF COMMERCE
United States Patent and Trademark Office
Address: COMMISSIONER FOR PATENTS
P.O. Box 1450
Alexandria, Virginia 22313-1450
www.uspto.gov

THE NOBLITT GROUP, PLLC
4800 NORTH SCOTTSDALE ROAD
SUITE 6000
SCOTTSDALE, AZ 85251

Mail Date: 04/22/2010

Applicant	: Robert D. Travis	: DECISION ON REQUEST FOR
Patent Number	: 7634912	: RECALCULATION of PATENT
Issue Date	: 12/22/2009	: TERM ADJUSTMENT IN VIEW
Appliction No	: 11/420,361	: OF WYETH AND NOTICE OF INTENT TO
Filed	: 05/25/2006	: ISSUE CERTIFICATE OF CORRECTION
		:

The Request for Recalculation is **GRANTED** to the extent indicated.

The patent term adjustment has been determined to be **285** days. The USPTO will *sua sponte* issue a certificate of correction reflecting the amount of PTA days determined by the recalculation.

Prior to the issuance of the certificate of correction, the USPTO will afford patentee an opportunity to be heard and request reconsideration. Accordingly, patentee has **one month or thirty (30) days**, whichever is longer, to file a request for reconsideration of this patent term adjustment calculation. See 35 U.S.C. 154(b)(3)(B)(ii) and 37 CFR 1.322(a)(4). No extensions of time will be granted under 37 CFR 1.136.

Patentee should use document code PET.OP if electronically filing a request for reconsideration of this patent term adjustment calculation. The patentee must also include the information required by 37 CFR 1.705(b)(2) and the fee required by 37 CFR 1.18(e). If patentee does not file a timely request for reconsideration of this patent term adjustment calculation including the information required by 37 CFR 1.705(b)(2) and the fee required by 37 CFR 1.18(e), the USPTO will issue a certificate of correction reflecting the PTA determination noted above.

Patentee should be aware that in order to preserve the right to review in the United States District Court for the District of Columbia of the USPTO patent term adjustment determination, patentee must ensure that he or she also take the steps required under 35 U.S.C. 154(b)(4)(A) in a timely manner. Nothing in the request for recalculation should be construed as providing an alternative time frame for commencing a civil action under 35 U.S.C. 154(b)(4)(A).

Any questions concerning this decision should be directed to the Office of Patent Legal Administration at 571-272-7702.

UNITED STATES PATENT AND TRADEMARK OFFICE

UNITED STATES DEPARTMENT OF COMMERCE
United States Patent and Trademark Office
Address: COMMISSIONER FOR PATENTS
P.O. Box 1450
Alexandria, Virginia 22313-1450
www.uspto.gov

THE NOBLITT GROUP, PLLC
4800 NORTH SCOTTSDALE ROAD
SUITE 6000
SCOTTSDALE, AZ 85251

Mail Date: 05/18/2010

Applicant : Robert D. Travis
Patent Number : 7634912
Issue Date : 12/22/2009
Application No : 11/420,361
Filed : 05/25/2006

: NOTICE CONCERNING IMPROPER
: CALCULATION OF PATENT TERM
: ADJUSTMENT BASED UPON USPTO
: IMPROPERLY MEASURING REDUCTION
: PERIOD UNDER 37 CFR 1.704(c)(10).

The United States Patent and Trademark Office (USPTO) discovered that in processing the recent recalculation decisions mailed in response to patentee's filed Request for Recalculation of Patent Term Adjustment in view of Wyeth, the USPTO improperly measured the reduction period for reductions under 37 CFR 1.704(c)(10). Pursuant to 37 CFR 1.704(c)(10), patentee's reduction begins on the date of filing the amendment under 37 CFR 1.312 ("1.312 amendment") or other related paper and ends on the date that the Office mails a response to the filing of the 1.312 amendment or other paper. It has been discovered that during the recalculation, the calculation failed to the limit the reduction to the mail date of the response to the 1.312 amendment or other paper. Accordingly, patentee's reductions were greater than warranted.

This notice **VACATES** the previous GRANTED request for recalculation and provides patentee with a revised GRANTED recalculation.

The patent term adjustment has been determined to be **320** days. The USPTO will *sua sponte* issue a certificate of correction reflecting the amount of patent term adjustment (PTA) days determined by the recalculation.

Prior to the issuance of the certificate of correction, the USPTO will afford patentee an opportunity to be heard and request reconsideration. Accordingly, patentee has **one month or thirty (30) days** from the mail date of this notice, whichever is longer, to file a request for reconsideration of this PTA calculation. See 35 U.S.C. § 154(b)(3)(B)(ii) and 37 CFR 1.322(a)(4).

Patentee should use document code PET.OP if electronically filing a request for reconsideration of this PTA calculation. The patentee must also include the information required by 37 CFR 1.705(b)(2), and the fee required by 37 CFR 1.18(e). If patentee does not file a timely request for reconsideration of this PTA calculation, including the information required by 37 CFR 1.705(b)(2) and the fee required by 37 CFR 1.18(e), the USPTO will issue a certificate of correction reflecting the PTA determination noted above.

Patentee should be aware that in order to preserve the right of review of the USPTO's PTA determination in the United States District Court for the District of Columbia, patentee must ensure that the steps required under 35 U.S.C. § 154 (b)(4) are taken in a timely manner. Nothing in the request for recalculation should be construed as providing an alternative time frame for commencing a civil action under 35 U.S.C. § 154(b)(4).

UNITED STATES PATENT AND TRADEMARK OFFICE

UNITED STATES DEPARTMENT OF COMMERCE
United States Patent and Trademark Office
Address: COMMISSIONER FOR PATENTS
P.O. Box 1450
Alexandria, Virginia 22313-1450
www.uspto.gov

PHILIP S. JOHNSON
JOHNSON & JOHNSON
ONE JOHNSON & JOHNSON PLAZA
NEW BRUNSWICK, NJ 08933-7003

Mail Date: 04/20/2010

Applicant	: Mark S. Ortiz	: DECISION ON REQUEST FOR
Patent Number	: 7635373	: RECALCULATION of PATENT
Issue Date	: 12/22/2009	: TERM ADJUSTMENT IN VIEW
Appliction No	: 11/420,368	: OF WYETH AND NOTICE OF INTENT TO
Filed	: 05/25/2006	: ISSUE CERTIFICATE OF CORRECTION
		:

The Request for Recalculation is **GRANTED** to the extent indicated.

The patent term adjustment has been determined to be **544** days. The USPTO will *sua sponte* issue a certificate of correction reflecting the amount of PTA days determined by the recalculation.

Prior to the issuance of the certificate of correction, the USPTO will afford patentee an opportunity to be heard and request reconsideration. Accordingly, patentee has **one month or thirty (30) days**, whichever is longer, to file a request for reconsideration of this patent term adjustment calculation. See 35 U.S.C. 154(b)(3)(B)(ii) and 37 CFR 1.322(a)(4). No extensions of time will be granted under 37 CFR 1.136.

Patentee should use document code PET.OP if electronically filing a request for reconsideration of this patent term adjustment calculation. The patentee must also include the information required by 37 CFR 1.705(b)(2) and the fee required by 37 CFR 1.18(e). If patentee does not file a timely request for reconsideration of this patent term adjustment calculation including the information required by 37 CFR 1.705(b)(2) and the fee required by 37 CFR 1.18(e), the USPTO will issue a certificate of correction reflecting the PTA determination noted above.

Patentee should be aware that in order to preserve the right to review in the United States District Court for the District of Columbia of the USPTO patent term adjustment determination, patentee must ensure that he or she also take the steps required under 35 U.S.C. 154(b)(4)(A) in a timely manner. Nothing in the request for recalculation should be construed as providing an alternative time frame for commencing a civil action under 35 U.S.C. 154(b)(4)(A).

Any questions concerning this decision should be directed to the Office of Patent Legal Administration at 571-272-7702.

UNITED STATES PATENT AND TRADEMARK OFFICE

UNITED STATES DEPARTMENT OF COMMERCE
United States Patent and Trademark Office
Address: COMMISSIONER FOR PATENTS
P.O. Box 1450
Alexandria, Virginia 22313-1450
www.uspto.gov

PHILIP S. JOHNSON
JOHNSON & JOHNSON
ONE JOHNSON & JOHNSON PLAZA
NEW BRUNSWICK, NJ 08933-7003

Mail Date: 05/17/2010

Applicant : Mark S. Ortiz
Patent Number : 7635373
Issue Date : 12/22/2009
Application No : 11/420,368
Filed : 05/25/2006

: NOTICE CONCERNING IMPROPER
: CALCULATION OF PATENT TERM
: ADJUSTMENT BASED UPON USPTO
: IMPROPERLY MEASURING REDUCTION
: PERIOD UNDER 37 CFR 1.704(c)(10).

The United States Patent and Trademark Office (USPTO) discovered that in processing the recent recalculation decisions mailed in response to patentee's filed Request for Recalculation of Patent Term Adjustment in view of Wyeth, the USPTO improperly measured the reduction period for reductions under 37 CFR 1.704(c)(10). Pursuant to 37 CFR 1.704(c)(10), patentee's reduction begins on the date of filing the amendment under 37 CFR 1.312 ("1.312 amendment") or other related paper and ends on the date that the Office mails a response to the filing of the 1.312 amendment or other paper. It has been discovered that during the recalculation, the calculation failed to the limit the reduction to the mail date of the response to the 1.312 amendment or other paper. Accordingly, patentee's reductions were greater than warranted.

This notice **VACATES** the previous GRANTED request for recalculation and provides patentee with a revised GRANTED recalculation.

The patent term adjustment has been determined to be **599** days. The USPTO will *sua sponte* issue a certificate of correction reflecting the amount of patent term adjustment (PTA) days determined by the recalculation.

Prior to the issuance of the certificate of correction, the USPTO will afford patentee an opportunity to be heard and request reconsideration. Accordingly, patentee has **one month or thirty (30) days** from the mail date of this notice, whichever is longer, to file a request for reconsideration of this PTA calculation. See 35 U.S.C. § 154(b)(3)(B)(ii) and 37 CFR 1.322(a)(4).

Patentee should use document code PET.OP if electronically filing a request for reconsideration of this PTA calculation. The patentee must also include the information required by 37 CFR 1.705(b)(2), and the fee required by 37 CFR 1.18(e). If patentee does not file a timely request for reconsideration of this PTA calculation, including the information required by 37 CFR 1.705(b)(2) and the fee required by 37 CFR 1.18(e), the USPTO will issue a certificate of correction reflecting the PTA determination noted above.

Patentee should be aware that in order to preserve the right of review of the USPTO's PTA determination in the United States District Court for the District of Columbia, patentee must ensure that the steps required under 35 U.S.C. § 154 (b)(4) are taken in a timely manner. Nothing in the request for recalculation should be construed as providing an alternative time frame for commencing a civil action under 35 U.S.C. § 154(b)(4).

UNITED STATES PATENT AND TRADEMARK OFFICE

Commissioner for Patents
United States Patent and Trademark Office
P.O. Box 1450
Alexandria, VA 22313-1450
www.uspto.gov

INTELLECTUAL PROPERTY
LAW OFFICES
1901 S. BASCOM AVENUE, SUITE 660
CAMPBELL, CA 95008

COPY MAILED

JUN 15 2007

OFFICE OF PETITIONS

In re Application of :
Gokhan AVKAROGULLARI :
Application No. 11/420,394 : DECISION ON PETITION
Filed: May 25, 2006 : TO WITHDRAW
Attorney Docket No. 60751.300801 : FROM RECORD
:

This is a decision on the Request to Withdraw as attorney or agent of record under 37 C.F.R. § 1.36(b), filed February 13, 2007.

The request is **NOT APPROVED**.

The Office cannot approve the request at this time since the reason provided does not meet any of the conditions under the mandatory or permissive categories enumerated in 37 CFR 10.40. Section 10.40 of Title 37 of the Code of Federal Regulation states, "a practitioner shall not withdraw from employment in a proceeding before the Office without permission from the Office." More specifically, 37 CFR 10.40 states, "if paragraph (b) of this section is not applicable, a practitioner may not request permission to withdraw in matter pending before the Office unless such request or such withdrawal is" for one the permissive reasons listed in 37 CFR 10.40(c). The reasons set forth in the request, assignee transferred the matter to another counsel and have been instructed to send the files for this matter to counsel, does not meet any of the conditions set forth in 37 CFR 10.40.

There are no pending Office actions at the present time.

All future communications from the Office will continue to be directed to the above-listed address until otherwise notified by applicant.

Telephone inquiries concerning this decision should be directed to Diane Goodwyn at 571-272-6735.

April Wise
Petitions Examiner
Office of Petitions

cc: ANTHONEY C. MURABITO
C/O WAGNER, MURABITO
& HAO LLP
TWO NORTH MARKET STREET,
THIRD FLOOR
SAN JOSE, CA 95113

UNITED STATES PATENT AND TRADEMARK OFFICE

UNITED STATES DEPARTMENT OF COMMERCE
United States Patent and Trademark Office
Address: COMMISSIONER FOR PATENTS
P.O. Box 1450
Alexandria, Virginia 22313-1450
www.uspto.gov

APPLICATION NO.	FILING DATE	FIRST NAMED INVENTOR	ATTORNEY DOCKET NO.	CONFIRMATION NO.
11/420,397	05/25/2006	Yukihiro Kudo	291791US2	1953

7590 03/06/2008
OBLON, SPIVAK, MCCLELLAND MAIER & NEUSTADT, P.C.
1940 DUKE STREET
ALEXANDRIA, VA 22314

EXAMINER
CHANG, CHARLES S

ART UNIT	PAPER NUMBER
2881	

NOTIFICATION DATE	DELIVERY MODE
03/06/2008	ELECTRONIC

DECISION GRANTING PETITION UNDER 37 CFR 1.138(d)

The declaration of express abandonment is recognized

This is in response to the petition under 37 CFR 1.138(d), requesting for a refund of any previously paid search fee and excess claims fee in the above-identified application.

The petition is granted.

The express abandonment is recognized. Any previously paid search fee and excess claims fee are hereby refunded.

Telephone inquiries should be directed to the Office of Data Management at (571) 272-4200.

Patent Publication Branch
Office of Data Management

FORM PET651G (Rev. 08/07)

UNITED STATES PATENT AND TRADEMARK OFFICE

Commissioner for Patents
United States Patent and Trademark Office
P.O. Box 1450
Alexandria, VA 22313-1450
www.uspto.gov

FISH & RICHARDSON P.C.
P.O. BOX 1022
MINNEAPOLIS MN 55440-1022

COPY MAILED

OCT 19 2009

OFFICE OF PETITIONS

In re Application of	:	
Munehiro Azami, et al.	:	
Application No. 11/420,404	:	DECISION GRANTING PETITION
Filed: May 25, 2006	:	UNDER 37 CFR 1.313(c)(2)
Attorney Docket No. 12732-0101002	:	

This is a decision on the petition under 37 CFR 1.313(c)(2), filed October 15, 2009, to withdraw the above-identified application from issue after payment of the issue fee.

The petition is **GRANTED**.

The above-identified application is withdrawn from issue for consideration of a submission under 37 CFR 1.114 (request for continued examination). *See* 37 CFR 1.313(c)(2).

Petitioner is advised that the issue fee paid on September 23, 2009 cannot be refunded. If, however, this application is again allowed, petitioner may request that it be applied towards the issue fee required by the new Notice of Allowance.[1]

Telephone inquiries should be directed to Terri Johnson at (571) 272-2991.

This application is being referred to Technology Center AU 2629 for processing of the request for continued examination under 37 CFR 1.114 and for consideration of the concurrently filed information disclosure statement.

The file does not indicate a change of address has been submitted, although the address given on the petition differs from the address of record. If appropriate, a change of address should be filed

[1] *The request to apply the issue fee to the new Notice may be satisfied by completing and returning the new Part B – Fee(s) Transmittal Form (along with any balance due at the time of submission). Petitioner is advised that the Issue Fee Transmittal Form must be completed and timely submitted to avoid abandonment of the application.*

in accordance with MPEP 601.03. A courtesy copy of this decision is being mailed to the address given on the petition; however, the Office will mail all future correspondence solely to the address of record.

Terri Johnson
Petitions Examiner
Office of Petitions

cc: **FISH & RICHARDSON P.C.**
1425 K STREET, N.W., 11TH FLOOR
WASHINGTON, DC 20005-3500

UNITED STATES PATENT AND TRADEMARK OFFICE

Commissioner for Patents
United States Patent and Trademark Office
P.O. Box 1450
Alexandria, VA 22313-1450
www.uspto.gov

LEVINE BAGADE HAN LLP
2483 EAST BAYSHORE ROAD,
SUITE 100
PALO ALTO, CA 94303

COPY MAILED

JAN 2 2 2008

OFFICE OF PETITIONS

In re Application of	:	
Christopher J. DANEK, et al	:	
Application No. 11/420,407	:	DECISION ON PETITION
Filed: May 25, 2006	:	TO WITHDRAW
Attorney Docket No. 649218035US	:	FROM RECORD
	:	

This is a decision on the Request to Withdraw as attorney or agent of record under 37 C.F.R. § 1.36(b), filed November 16, 2007.

The request is **DISMISSED** as moot.

A review of the file record indicates that the power of attorney to Levine, Bagade, Han, LLP, has been revoked by the assignee of the patent application on December 12, 2007. Accordingly, the request to withdraw under 37 C.F.R. § 1.36(b) is moot.

The correspondence address of record has been changed and the new correspondence address is the address indicated below.

Telephone inquires concerning this decision should be directed to undersigned at 571-272- 6735.

Diane Goodwyn
Petitions Examiner
Office of Petitions

cc: PAUL T. PARKER
PERKINS COLE LLP
1201 THIRD AVENUE,
SUITE 4800
SEATTLE, WA 98101-3099

UNITED STATES PATENT AND TRADEMARK OFFICE

Commissioner for Patents
United States Patent and Trademark Office
P.O. Box 1450
Alexandria, VA 22313-1450
www.uspto.gov

LEVINE BAGADE HAN LLP
2483 EAST BAYSHORE ROAD,
SUITE 100
PALO ALTO, CA 94303

COPY MAILED

JAN 2 2 2008

OFFICE OF PETITIONS

In re Application of	:	
Christopher J. DANEK, et al	:	
Application No. 11/420,419	:	DECISION ON PETITION
Filed: May 25, 2006	:	TO WITHDRAW
Attorney Docket No. 649218041US	:	FROM RECORD
	:	

This is a decision on the Request to Withdraw as attorney or agent of record under 37 C.F.R. § 1.36(b), filed November 16, 2007.

The request is **DISMISSED** as moot.

A review of the file record indicates that the power of attorney to Levine, Bagade, Han, LLP, has been revoked by the assignee of the patent application on December 12, 2007. Accordingly, the request to withdraw under 37 C.F.R. § 1.36(b) is moot.

The correspondence address of record has been changed and the new correspondence address is the address indicated below.

Telephone inquires concerning this decision should be directed to undersigned at 571-272- 6735.

Diane Goodwyn
Petitions Examiner
Office of Petitions

cc: PAUL T. PARKER
PERKINS COLE LLP
1201 THIRD AVENUE,
SUITE 4800
SEATTLE, WA 98101-3099

UNITED STATES PATENT AND TRADEMARK OFFICE

Commissioner for Patents
United States Patent and Trademark Office
P.O. Box 1450
Alexandria, VA 22313-1450
www.uspto.gov

LEVINE BAGADE HAN LLP
2483 EAST BAYSHORE ROAD,
SUITE 100
PALO ALTO, CA 94303

COPY MAILED

JAN 2 2 2008

OFFICE OF PETITIONS

In re Application of	:	
Gary S. KAPLAN, et al	:	
Application No. 11/420,438	:	DECISION ON PETITION
Filed: May 25, 2006	:	TO WITHDRAW
Attorney Docket No. 649218033US	:	FROM RECORD

This is a decision on the Request to Withdraw as attorney or agent of record under 37 C.F.R. § 1.36(b), filed November 16, 2007.

The request is **DISMISSED** as moot.

A review of the file record indicates that the power of attorney to Levine, Bagade, Han, LLP, has been revoked by the assignee of the patent application on December 12, 2007. Accordingly, the request to withdraw under 37 C.F.R. § 1.36(b) is moot.

The correspondence address of record has been changed and the new correspondence address is the address indicated below.

Telephone inquires concerning this decision should be directed to undersigned at 571-272- 6735.

Diane Goodwyn
Petitions Examiner
Office of Petitions

cc: PAUL T. PARKER
PERKINS COLE LLP
1201 THIRD AVENUE,
SUITE 4800
SEATTLE, WA 98101-3099

UNITED STATES PATENT AND TRADEMARK OFFICE

Commissioner for Patents
United States Patent and Trademark Office
P.O. Box 1450
Alexandria, VA 22313-1450
www.uspto.gov

Levine Bagade Han LLP
2483 East Bayshore Road, Suite 100
Palo Alto, CA 94303

COPY MAILED

MAR 17 2008

OFFICE OF PETITIONS

In re Application of	:	
Gary S. Kaplan et al.	:	
Application No. 11/420,442	:	DECISION ON PETITION
Filed: May 25, 2006	:	TO WITHDRAW
Attorney Docket No. 649218034US	:	FROM RECORD
	:	

This is a decision on the Request to Withdraw as attorney or agent of record under 37 C.F.R. § 1.36(b), filed November 16, 2007.

The request is **NOT APPROVED** because it is moot.

A review of the file record indicates that the power of attorney to Levine Bagade Han LLP has been revoked by the assignee of the patent application on December 12, 2007. Accordingly, the request to withdraw under 37 C.F.R. § 1.36(b) is moot.

All future communications from the Office will continue to be directed to the below-listed address until otherwise notified by applicant.

Telephone inquires concerning this decision should be directed to Terri Williams at 571-272-2991.

T. Williams

Terri Williams
Petitions Examiner
Office of Petitions

cc: **Perkins Coie LLP**
Patent Sea
P.O. Box 1247
Seattle, WA 98111

UNITED STATES PATENT AND TRADEMARK OFFICE

Commissioner for Patents
United States Patent and Trademark Office
P.O. Box 1450
Alexandria, VA 22313-1450
www.uspto.gov

Schwegman, Lundberg & Woessner, P.A.
P.O. Box 2938
Minneapolis, MN 55402

COPY MAILED

OCT 16 2008

OFFICE OF PETITIONS

In re Application of	:	
Thomas Szepesi	:	
Application No. 11/420,457	:	DECISION ON PETITION
Filed: May 25, 2006	:	TO WITHDRAW
Attorney Docket No. 2368.001US1	:	FROM RECORD

This is a decision on the Request to Withdraw as attorney or agent of record under 37 C.F.R. § 1.36(b), filed May 22, 2008.

The request is **NOT APPROVED.**

A grantable request to withdraw as attorney/agent of record must be signed by every attorney/agent seeking to withdraw or contain a clear indication that one attorney is signing on behalf of another/others. The Office requires the practitioner(s) requesting withdrawal to certify that he, she, or they have: (1) given reasonable notice to the client, prior to the expiration of the response period, that the practitioner(s) intends to withdraw from employment; (2) delivered to the client or a duly authorized representative of the client all papers and property (including funds) to which the client is entitled; and (3) notified the client of any responses that may be due and the time frame within which the client must respond, pursuant 37 CFR 10.40(c).

The request cannot be approved because there is no indication that the acts noted in the above-identified certifications have been performed. Refer to Form No. PTO/SB/83 (Updated 4/2008).

All future communications from the Office will continue to be directed to the above-listed address until otherwise notified by applicant.

Telephone inquiries concerning this decision should be directed to the undersigned at 571-272-4618.

Kimberly Inabinet
Petitions Examiner
Office of Petitions

cc: Thomas Szepesi
550 E. Weddell Drive
Suite 4
Sunnyvale, CA 94089

UNITED STATES PATENT AND TRADEMARK OFFICE

Commissioner for Patents
United States Patent and Trademark Office
P.O. Box 1450
Alexandria, VA 22313-1450
www.uspto.gov

BROSEMER, KOLEFAS & ASSOCIATES, LLC
1 BETHANY ROAD
BUILDING 4 – SUITE # 58
HAZLET NJ 07730

COPY MAILED

FEB 1 2 2009

OFFICE OF PETITIONS

In re Application of	:	
Chen et al.	:	
Application No. 11/420,467	:	DECISION ON PETITION
Filed: May 25, 2006	:	
Attorney Docket No. IS-05-003	:	

This is a decision on the petition under the unintentional provisions of 37 CFR 1.137(b), filed April 10, 2007, to revive the above-identified application.

The petition is **GRANTED**.

The application became abandoned for failure to reply in a timely manner to the Notice to File Missing Parts of Nonprovisional Application (Notice), mailed June 22, 2006. The Notice set a period for reply of two (2) months from the mail date of the Notice. No extensions of time under the provisions of 37 CFR 1.136(a) were obtained. Accordingly, the application became abandoned on August 23, 2006. A Notice of Abandonment was mailed March 5, 2007.

The petition satisfies the requirements of 37 CFR 1.137(b) in that petitioner has supplied (1) the reply in the form of an Oath/Declaration and the $65.00 surcharge fee, (2) the petition fee of $750.00, and (3) a proper statement of unintentional delay.

Telephone inquiries concerning this decision should be directed to Joan Olszewski at (571) 272-7751.

This application is being referred to the Office of Patent Application Processing for further processing in accordance with this decision on petition.

/Liana Walsh/
Liana Walsh
Petitioner Examiner
Office of Petitions

UNITED STATES PATENT AND TRADEMARK OFFICE

Commissioner for Patents
United States Patent and Trademark Office
P.O. Box 1450
Alexandria, VA 22313-1450
www.uspto.gov

AKA CHAN LLP
900 LAFAYETTE STREET
SUITE 710
SANTA CLARA CA 95050

DEC 18 2006

In re Application of: HOMER	:
Appl. No.: 11/420,469	: DECISION ON PETITION to
Filed: May 25, 2006	: make SPECIAL under 37 CFR
For: MINIMALLY INVASIVE SURGICAL	: 1.102
ASSEMBLY AND METHODS	:

This is a decision on the petition filed on August 24, 2006 to make the above-identified application special under the accelerated examination procedure set forth in MPEP § 708.02(VIII) and in accordance with 37 C.F.R. § 1.102(d).

The petition to make the application special is DISMISSED.

In support of the petition, petitioner provides: a) the applicable fee; b) a statement that all claims are drawn to a single invention; c) a statement that a pre-examination search has been made in class 600 subclasses38, 587, 595; class 128 subclass 774, 782; and class 709 subclass 201; d) a discussion of each of the references.

For accelerated examination under MPEP § 708.02(VIII) in accordance with 37 C.F.R. § 1.102(d), a showing of the following is required: a) the applicable petition fee; b)a statement that all claims are directed to a single invention, or if the Office determines that all the claims presented are not obviously directed to a single invention, applicant will make an election without traverse; c) a statement that a pre-examination search was made, listing the field of search by class and subclass; d) a copy of each of the references deemed most closely related to the claimed subject matter; and e) a detailed discussion of the references pointing out with the particularity required by 37 CFR 1.111 (b) and (c), how the claimed subject matter is distinguishable over the references.

The requirements of MPEP § 708.02(VIII)(a) and (c) are considered met.

However, the petition does not meet the requirements of MPEP § 708.02(VIII)(b), (d) and (e).

MPEP § 708.02(VIII)(b) requires petitioner to state that all claims are directed to a single invention, or if the Office determines that all the claims presented are not obviously directed to a single invention, applicant will make an election without traverse. Petitioner does not state that all claims are directed to a single invention, *or that applicant will make an election without*

traverse should the Office make a restriction requirement. Petitioner merely states "the claims in the application are directed to a single invention". It is not clear what petitioner "agrees to" because during prosecution the Office, not the applicant, makes a restriction requirement when appropriate. Further, even if the applicant considers all the claims to be directed to a single invention, the rule requires a statement that he or she will make an election without traverse should the Office make a restriction requirement. Because the petition does not contain this statement, it fails to meet the requirements of MPEP § 708.02(VIII)(b).

MPEP § 708.02(VIII)(d) requires petitioner to submit a copy of each of the references deemed most closely related to the claimed subject matter. It is noted that applicant states copies have not been provided as all listed patents are US patents or US patent publications. At minimum, when copies are not provided, the patents uncovered by applicant should be listed on an Information Disclosure Statement so as to ensure the record is clear as to which reference applicant has uncovered and is of the opinion are closely related to the claimed invention. Because the petition does not contain the required submission of copies, or at minimum an IDS for the Office to consider, it fails to meet the requirements MPEP § 708.02(VIII)(d).

Regarding the requirement of MPEP § 708.02(VIII)(e), 37 CFR § 1.111 (b) states "[a] general allegation that the claims define a patentable invention without specifically pointing out how the language of the claims patentably distinguishes them from the references does not comply with the requirements of this section." 37 CFR § 1.111 (c) states in part "the applicant or patent owner must clearly point out the patentable novelty which he or she thinks the claims present in view of the state of the art disclosed by the references cited or the objections made." Applicant provides a detailed discussion of each reference listed in the petition but does not point out the particular language of each independent claims 1, 2, 3, 4, 12, 13, 14, 15, 23, 24, 25, 26, 34 and 35 that distinguish from these references. For example, applicant refers to specific language of claim 1, yet also states "claims 2, 3, 4, 12, 13, 14, 15, 23, 24, 25 and 26 also recite similar limitations. It is not know by the Office what language applicant believes is "similar" or how this language would distinguish from each reference. Similarly, applicant's general allegation that US patent application publication 2003/0036678 describes a "moisture sensor" but this sensor does not collect biological data is to vague in that applicant fails to explain why a sensor which is provided to sense the moisture resultant from ejaculation does not meet the claimed "biological data". To meet the requirements of 37 CFR § 1.111 (c), each independent claim must be compared with each reference, and the patentable novelty in each independent claim relative to each reference must be clearly pointed out. Because the petition does not point out the specific language in each independent claim that distinguishes over each reference, it fails to meet the requirements of MPEP § 708.02(VIII)(e).

While Technology Center Directors may have granted petitions that do not comply with the detailed discussion requirement of the Accelerated Examination procedure, Technology Center Director decisions on petitions are not binding precedent of the Patent Examining Corps, and the application of an improper standard in certain cases does not require the Office to continue to apply the improper standard in all cases. *See In re The Boulevard Entertainment, Inc.*, 334 F.3d 1336, 1343, 67 USPQ2d 1475, 1480 (Fed. Cir. 2003)).

Any request for reconsideration of this decision must be submitted within 2 (two) months of the date of this decision in order to be considered timely. Any request for reconsideration must provide the omissions or insufficiencies outlined above.

Any inquiry regarding this decision should be directed to J. Harrison, Special Program Examiner, at (571) 272-4449.

Petition DISMISSED

J. Harrison, Special Program Examiner
Technology Center 3700 – Mechanical Engineering,
Manufacturing and Products

UNITED STATES PATENT AND TRADEMARK OFFICE

UNITED STATES DEPARTMENT OF COMMERCE
United States Patent and Trademark Office
Address: COMMISSIONER FOR PATENTS
P.O. Box 1450
Alexandria, Virginia 22313-1450
www.uspto.gov

NORTH AMERICA INTELLECTUAL PROPERTY CORPORATION
P.O. BOX 506
MERRIFIELD, VA 22116

Mail Date: 05/19/2010

Applicant	: Chien-Ming CHEN	: DECISION ON REQUEST FOR
Patent Number	: 7649919	: RECALCULATION of PATENT
Issue Date	: 01/19/2010	: TERM ADJUSTMENT IN VIEW
Application No	: 11/420,481	: OF WYETH AND NOTICE OF INTENT TO
Filed	: 05/26/2006	: ISSUE CERTIFICATE OF CORRECTION
		:

The Request for Recalculation is **GRANTED** to the extent indicated.

The patent term adjustment has been determined to be **11** days. The USPTO will *sua sponte* issue a certificate of correction reflecting the amount of PTA days determined by the recalculation.

Prior to the issuance of the certificate of correction, the USPTO will afford patentee an opportunity to be heard and request reconsideration. Accordingly, patentee has **one month or thirty (30) days**, whichever is longer, to file a request for reconsideration of this patent term adjustment calculation. See 35 U.S.C. 154(b)(3)(B)(ii) and 37 CFR 1.322(a)(4). No extensions of time will be granted under 37 CFR 1.136.

Patentee should use document code PET.OP if electronically filing a request for reconsideration of this patent term adjustment calculation. The patentee must also include the information required by 37 CFR 1.705(b)(2) and the fee required by 37 CFR 1.18(e). If patentee does not file a timely request for reconsideration of this patent term adjustment calculation including the information required by 37 CFR 1.705(b)(2) and the fee required by 37 CFR 1.18(e), the USPTO will issue a certificate of correction reflecting the PTA determination noted above.

Patentee should be aware that in order to preserve the right to review in the United States District Court for the District of Columbia of the USPTO patent term adjustment determination, patentee must ensure that he or she also take the steps required under 35 U.S.C. 154(b)(4)(A) in a timely manner. Nothing in the request for recalculation should be construed as providing an alternative time frame for commencing a civil action under 35 U.S.C. 154(b)(4)(A).

Any questions concerning this decision should be directed to the Office of Patent Legal Administration at 571-272-7702.

UNITED STATES PATENT AND TRADEMARK OFFICE

Commissioner for Patents
United States Patent and Trademark Office
P.O. Box 1450
Alexandria, VA 22313-1450
www.uspto.gov

DAVID KIEWIT
5901 THIRD ST SOUTH
ST PETERSBURG FL 33705

COPY MAILED

NOV 0 3 2006

OFFICE OF PETITIONS

In re Application of	:	
FELLER	:	
Application No. 11/420,495	:	DECISION ON PETITION
Filed: May 26, 2006	:	TO MAKE SPECIAL UNDER
Attorney Docket No. FMC	:	37 CFR 1.102(c)(1)
	:	

This is a decision on the petition under 37 CFR 1.102(c)(1), filed May 26, 2006, to make the above-identified application special based on applicant's age as set forth in M.P.E.P. § 708.02, Section IV.

The petition is **GRANTED**.

A grantable petition to make an application special under 37 CFR 1.102(c)(1) and MPEP § 708.02, Section IV: Applicant's Age, must be accompanied by evidence showing that at least one of the applicants is 65 years of age, or more, such as a birth certificate or a statement by applicant. No fee is required.

The instant petition includes an affidavit from inventor Murry F. Feller, attesting to his age. Accordingly, the above-identified application has been accorded "special" status.

Telephone inquiries concerning this decision should be directed to the undersigned at 571-272-7253.

All other inquiries concerning either the examination or status of the application should be directed to the Technology Center.

The application is being forwarded to the Technology Center Art Unit 2834 for action on the merits commensurate with this decision.

Monica A. Graves
Petitions Examiner
Office of Petitions

UNITED STATES PATENT AND TRADEMARK OFFICE

Commissioner for Patents
United States Patent and Trademark Office
P.O. Box 1450
Alexandria, VA 22313-1450
www.uspto.gov

JOSE OLALDE RANGEL
519 CLEVELAND STREET
SUITE 101
CLEARWATER FL 33755

COPY MAILED

MAR 26 2008

OFFICE OF PETITIONS

In re Application of :
Jose Angel Olalde Rangel :
Application No. 11/420,500 : ON PETITION
Filed: May 26, 2006 :
Title of Invention: **SYNERGISTIC DIABETIC PHYTO-NUTRACEUTICAL COMPOSITION** :

This is a decision on the petition filed March 12, 2008 under 37 CFR 1.137(b),[1] to revive the above-identified application.

The petition is **GRANTED**.

This application became abandoned for failure to timely reply to the non-Final Office Action mailed June 1, 2007. A shortened statutory period of three months was set for replying to the non-Final Office Action. No extensions of time having been requested prior to December 1, 2007, this application became abandoned September 5, 2007. Accordingly, a Notice of Abandonment was mailed February 26, 2008.

A review of the record reveals that a two month extension of time was filed October 1, 2007, extending the response period to November 1, 2007, though no response was filed. Subsequently, an amendment was filed November 30, 2007 though without a proper

---

[1]Effective December 1, 1997, the provisions of 37 CFR 1.137(b) now provide that where the delay in reply was unintentional, a petition may be filed to revive an abandoned application or a lapsed patent pursuant to 37 CFR 1.137(b). A grantable petition filed under the provisions of 37 CFR 1.137(b) must be accompanied by:

(1) the required reply, unless previously filed. In a nonprovisional application abandoned for failure to prosecute, the required reply may be met by the filing of a continuing application. In a nonprovisional application filed on or after June 8, 1995, and abandoned for failure to prosecute, the required reply may also be met by the filing of a request for continued examination in compliance with § 1.114. In an application or patent, abandoned or lapsed for failure to pay the issue fee or any portion thereof, the required reply must be the payment of the issue fee or any outstanding balance thereof. In an application abandoned for failure to pay the publication fee, the required reply must include payment of the publication fee.

(2) the petition fee as set forth in 37 CFR 1.17(m);

(3) a statement that the entire delay in filing the required reply from the due date for the reply until the filing of a grantable petition pursuant to 37 CFR 1.137(b) was unintentional. The Commissioner may required additional information where there is a question whether the delay was unintentional; and

(4) any terminal disclaimer (and fee as set forth in 37 CFR 1.20(d)) required pursuant to 37 CFR 1.137(c)).

extension of time which was noted in a December 18, 2007 Notice mailed by the USPTO. A further review reveals that after the abandonment a three month extension of time was filed January 8, 2008, after the application became abandoned. However, pursuant to 37 CFR 1.136, an extension of time must be filed prior to the expiration of the maximum period obtainable for reply to avoid abandonment. Accordingly, since the $525.00 was subsequent to the maximum period obtainable for reply, this fee is unnecessary and will be credited back to the credit card used.

This matter is being referred to Technology Center 1655 for appropriate action on the amendment filed November 30, 2008.

Telephone inquiries concerning this matter should be directed to the undersigned Petitions Attorney at (571) 272-3212.

Patricia Faison-Ball

Patricia Faison-Ball
Senior Petitions Attorney
Office of Petitions

UNITED STATES PATENT AND TRADEMARK OFFICE

UNITED STATES DEPARTMENT OF COMMERCE
United States Patent and Trademark Office
Address: COMMISSIONER FOR PATENTS
P.O. Box 1450
Alexandria, Virginia 22313-1450
www.uspto.gov

ROCHE DIAGNOSTICS OPERATIONS INC.
9115 Hague Road
Indianapolis, IN 46250-0457

Mail Date: 04/20/2010

Applicant	: Gerald F. Sigler	: DECISION ON REQUEST FOR
Patent Number	: 7649085	: RECALCULATION of PATENT
Issue Date	: 01/19/2010	: TERM ADJUSTMENT IN VIEW
Appliction No	: 11/420,502	: OF WYETH AND NOTICE OF INTENT TO
Filed	: 05/26/2006	: ISSUE CERTIFICATE OF CORRECTION
		:

The Request for Recalculation is **GRANTED** to the extent indicated.

The patent term adjustment has been determined to be **34** days. The USPTO will *sua sponte* issue a certificate of correction reflecting the amount of PTA days determined by the recalculation.

Prior to the issuance of the certificate of correction, the USPTO will afford patentee an opportunity to be heard and request reconsideration. Accordingly, patentee has **one month or thirty (30) days**, whichever is longer, to file a request for reconsideration of this patent term adjustment calculation. See 35 U.S.C. 154(b)(3)(B)(ii) and 37 CFR 1.322(a)(4). No extensions of time will be granted under 37 CFR 1.136.

Patentee should use document code PET.OP if electronically filing a request for reconsideration of this patent term adjustment calculation. The patentee must also include the information required by 37 CFR 1.705(b)(2) and the fee required by 37 CFR 1.18(e). If patentee does not file a timely request for reconsideration of this patent term adjustment calculation including the information required by 37 CFR 1.705(b)(2) and the fee required by 37 CFR 1.18(e), the USPTO will issue a certificate of correction reflecting the PTA determination noted above.

Patentee should be aware that in order to preserve the right to review in the United States District Court for the District of Columbia of the USPTO patent term adjustment determination, patentee must ensure that he or she also take the steps required under 35 U.S.C. 154(b)(4)(A) in a timely manner. Nothing in the request for recalculation should be construed as providing an alternative time frame for commencing a civil action under 35 U.S.C. 154(b)(4)(A).

Any questions concerning this decision should be directed to the Office of Patent Legal Administration at 571-272-7702.

UNITED STATES PATENT AND TRADEMARK OFFICE

UNITED STATES DEPARTMENT OF COMMERCE
United States Patent and Trademark Office
Address: COMMISSIONER FOR PATENTS
P.O. Box 1450
Alexandria, Virginia 22313-1450
www.uspto.gov

ANDREA Q. RYAN
SANOFI-AVENTIS U.S. LLC
1041 ROUTE 202-206
MAIL CODE: D303A
BRIDGEWATER, NJ 08807

Mail Date: 04/20/2010

Applicant	: Michael Bosch	: DECISION ON REQUEST FOR
Patent Number	: 7652011	: RECALCULATION of PATENT
Issue Date	: 01/26/2010	: TERM ADJUSTMENT IN VIEW
Appliction No	: 11/420,505	: OF WYETH AND NOTICE OF INTENT TO
Filed	: 05/26/2006	: ISSUE CERTIFICATE OF CORRECTION
		:

The Request for Recalculation is **GRANTED** to the extent indicated.

The patent term adjustment has been determined to be **422** days. The USPTO will *sua sponte* issue a certificate of correction reflecting the amount of PTA days determined by the recalculation.

Prior to the issuance of the certificate of correction, the USPTO will afford patentee an opportunity to be heard and request reconsideration. Accordingly, patentee has **one month or thirty (30) days**, whichever is longer, to file a request for reconsideration of this patent term adjustment calculation. See 35 U.S.C. 154(b)(3)(B)(ii) and 37 CFR 1.322(a)(4). No extensions of time will be granted under 37 CFR 1.136.

Patentee should use document code PET.OP if electronically filing a request for reconsideration of this patent term adjustment calculation. The patentee must also include the information required by 37 CFR 1.705(b)(2) and the fee required by 37 CFR 1.18(e). If patentee does not file a timely request for reconsideration of this patent term adjustment calculation including the information required by 37 CFR 1.705(b)(2) and the fee required by 37 CFR 1.18(e), the USPTO will issue a certificate of correction reflecting the PTA determination noted above.

Patentee should be aware that in order to preserve the right to review in the United States District Court for the District of Columbia of the USPTO patent term adjustment determination, patentee must ensure that he or she also take the steps required under 35 U.S.C. 154(b)(4)(A) in a timely manner. Nothing in the request for recalculation should be construed as providing an alternative time frame for commencing a civil action under 35 U.S.C. 154(b)(4)(A).

Any questions concerning this decision should be directed to the Office of Patent Legal Administration at 571-272-7702.

UNITED STATES PATENT AND TRADEMARK OFFICE

Commissioner for Patents
United States Patent and Trademark Office
P.O. Box 1450
Alexandria, VA 22313-1450
www.uspto.gov

PATTERSON, THUENTE, SKAAR & CHRISTENSEN, P.A.
4800 IDS CENTER
80 SOUTH 8TH STREET
MINNEAPOLIS MN 55402-2100

COPY MAILED

AUG 05 2008

OFFICE OF PETITIONS

In re Application of	:	
Peterson et al.	:	
Application No.: 11/420515	:	ON PETITION
Filing or 371(c) Date: 05/26/2006	:	
Attorney Docket Number:	:	
1798.162US01	:	

This is a decision on the petition under 37 CFR 1.182, filed on March 27, 2008, to change the order of the names of the inventors.

The petition is **granted**.

The order of the names of the inventors will be changed as follows:

1. Peter Peterson

2. Kenneth F. Olson

A corrected filing receipt reflecting the correct order of the names of the inventors is attached.

This application is being referred to Technology Center Art Unit 3764 for examination in the normal course of business.

Telephone inquiries concerning this decision should be directed to the undersigned at (571) 272-3232.

/Derek L. Woods/
Derek L. Woods
Attorney
Office of Petitions

Enclosure: Corrected Filing Receipt

UNITED STATES PATENT AND TRADEMARK OFFICE

UNITED STATES DEPARTMENT OF COMMERCE
United States Patent and Trademark Office
Address: COMMISSIONER FOR PATENTS
P.O. Box 1450
Alexandria, Virginia 22313-1450
www.uspto.gov

APPLICATION NUMBER	FILING or 371(c) DATE	GRP ART UNIT	FIL FEE REC'D	ATTY.DOCKET.NO	TOT CLAIMS	IND CLAIMS
11/420,515	05/26/2006	3764	1130	1798.162US01	20	3

CONFIRMATION NO. 1142

CORRECTED FILING RECEIPT

24113
PATTERSON, THUENTE, SKAAR & CHRISTENSEN, P.A.
4800 IDS CENTER
80 SOUTH 8TH STREET
MINNEAPOLIS, MN 55402-2100

OC000000031344144

Date Mailed: 08/01/2008

Receipt is acknowledged of this non-provisional patent application. The application will be taken up for examination in due course. Applicant will be notified as to the results of the examination. Any correspondence concerning the application must include the following identification information: the U.S. APPLICATION NUMBER, FILING DATE, NAME OF APPLICANT, and TITLE OF INVENTION. Fees transmitted by check or draft are subject to collection. Please verify the accuracy of the data presented on this receipt. **If an error is noted on this Filing Receipt, please submit a written request for a Filing Receipt Correction. Please provide a copy of this Filing Receipt with the changes noted thereon. If you received a "Notice to File Missing Parts" for this application, please submit any corrections to this Filing Receipt with your reply to the Notice. When the USPTO processes the reply to the Notice, the USPTO will generate another Filing Receipt incorporating the requested corrections**

Applicant(s)

Peter Peterson, Mission Viejo, CA;
Kenneth F. Olson, Woodinville, WA;

Power of Attorney: The patent practitioners associated with Customer Number 24113

Domestic Priority data as claimed by applicant

Foreign Applications

If Required, Foreign Filing License Granted: 06/03/2006

The country code and number of your priority application, to be used for filing abroad under the Paris Convention, is **US 11/420,515**

Projected Publication Date: Not Applicable

Non-Publication Request: No

Early Publication Request: No

Title

CPR FEEDBACK METHOD AND APPARATUS

Preliminary Class

601

PROTECTING YOUR INVENTION OUTSIDE THE UNITED STATES

Since the rights granted by a U.S. patent extend only throughout the territory of the United States and have no effect in a foreign country, an inventor who wishes patent protection in another country must apply for a patent in a specific country or in regional patent offices. Applicants may wish to consider the filing of an international application under the Patent Cooperation Treaty (PCT). An international (PCT) application generally has the same effect as a regular national patent application in each PCT-member country. The PCT process **simplifies** the filing of patent applications on the same invention in member countries, but **does not result** in a grant of "an international patent" and does not eliminate the need of applicants to file additional documents and fees in countries where patent protection is desired.

Almost every country has its own patent law, and a person desiring a patent in a particular country must make an application for patent in that country in accordance with its particular laws. Since the laws of many countries differ in various respects from the patent law of the United States, applicants are advised to seek guidance from specific foreign countries to ensure that patent rights are not lost prematurely.

Applicants also are advised that in the case of inventions made in the United States, the Director of the USPTO must issue a license before applicants can apply for a patent in a foreign country. The filing of a U.S. patent application serves as a request for a foreign filing license. The application's filing receipt contains further information and guidance as to the status of applicant's license for foreign filing.

Applicants may wish to consult the USPTO booklet, "General Information Concerning Patents" (specifically, the section entitled "Treaties and Foreign Patents") for more information on timeframes and deadlines for filing foreign patent applications. The guide is available either by contacting the USPTO Contact Center at 800-786-9199, or it can be viewed on the USPTO website at http://www.uspto.gov/web/offices/pac/doc/general/index.html.

For information on preventing theft of your intellectual property (patents, trademarks and copyrights), you may wish to consult the U.S. Government website, http://www.stopfakes.gov. Part of a Department of Commerce initiative, this website includes self-help "toolkits" giving innovators guidance on how to protect intellectual property in specific countries such as China, Korea and Mexico. For questions regarding patent enforcement issues, applicants may call the U.S. Government hotline at 1-866-999-HALT (1-866-999-4158).

LICENSE FOR FOREIGN FILING UNDER

Title 35, United States Code, Section 184

Title 37, Code of Federal Regulations, 5.11 & 5.15

GRANTED

The applicant has been granted a license under 35 U.S.C. 184, if the phrase "IF REQUIRED, FOREIGN FILING LICENSE GRANTED" followed by a date appears on this form. Such licenses are issued in all applications where the conditions for issuance of a license have been met, regardless of whether or not a license may be required as

set forth in 37 CFR 5.15. The scope and limitations of this license are set forth in 37 CFR 5.15(a) unless an earlier license has been issued under 37 CFR 5.15(b). The license is subject to revocation upon written notification. The date indicated is the effective date of the license, unless an earlier license of similar scope has been granted under 37 CFR 5.13 or 5.14.

This license is to be retained by the licensee and may be used at any time on or after the effective date thereof unless it is revoked. This license is automatically transferred to any related applications(s) filed under 37 CFR 1.53(d). This license is not retroactive.

The grant of a license does not in any way lessen the responsibility of a licensee for the security of the subject matter as imposed by any Government contract or the provisions of existing laws relating to espionage and the national security or the export of technical data. Licensees should apprise themselves of current regulations especially with respect to certain countries, of other agencies, particularly the Office of Defense Trade Controls, Department of State (with respect to Arms, Munitions and Implements of War (22 CFR 121-128)); the Bureau of Industry and Security, Department of Commerce (15 CFR parts 730-774); the Office of Foreign AssetsControl, Department of Treasury (31 CFR Parts 500+) and the Department of Energy.

NOT GRANTED

No license under 35 U.S.C. 184 has been granted at this time, if the phrase "IF REQUIRED, FOREIGN FILING LICENSE GRANTED" DOES NOT appear on this form. Applicant may still petition for a license under 37 CFR 5.12, if a license is desired before the expiration of 6 months from the filing date of the application. If 6 months has lapsed from the filing date of this application and the licensee has not received any indication of a secrecy order under 35 U.S.C. 181, the licensee may foreign file the application pursuant to 37 CFR 5.15(b).

UNITED STATES PATENT AND TRADEMARK OFFICE

UNITED STATES DEPARTMENT OF COMMERCE
United States Patent and Trademark Office
Address: COMMISSIONER FOR PATENTS
P.O. Box 1450
Alexandria, Virginia 22313-1450
www.uspto.gov

MEDTRONIC, INC.
710 MEDTRONIC PARKWAY NE
MINNEAPOLIS, MN 55432-9924

Mail Date: 04/20/2010

Applicant	: Lev A. Koyrakh	: DECISION ON REQUEST FOR
Patent Number	: 7640054	: RECALCULATION of PATENT
Issue Date	: 12/29/2009	: TERM ADJUSTMENT IN VIEW
Appliction No	: 11/420,521	: OF WYETH AND NOTICE OF INTENT TO
Filed	: 05/26/2006	: ISSUE CERTIFICATE OF CORRECTION
		:

The Request for Recalculation is **GRANTED** to the extent indicated.

The patent term adjustment has been determined to be **660** days. The USPTO will *sua sponte* issue a certificate of correction reflecting the amount of PTA days determined by the recalculation.

Prior to the issuance of the certificate of correction, the USPTO will afford patentee an opportunity to be heard and request reconsideration. Accordingly, patentee has **one month or thirty (30) days**, whichever is longer, to file a request for reconsideration of this patent term adjustment calculation. See 35 U.S.C. 154(b)(3)(B)(ii) and 37 CFR 1.322(a)(4). No extensions of time will be granted under 37 CFR 1.136.

Patentee should use document code PET.OP if electronically filing a request for reconsideration of this patent term adjustment calculation. The patentee must also include the information required by 37 CFR 1.705(b)(2) and the fee required by 37 CFR 1.18(e). If patentee does not file a timely request for reconsideration of this patent term adjustment calculation including the information required by 37 CFR 1.705(b)(2) and the fee required by 37 CFR 1.18(e), the USPTO will issue a certificate of correction reflecting the PTA determination noted above.

Patentee should be aware that in order to preserve the right to review in the United States District Court for the District of Columbia of the USPTO patent term adjustment determination, patentee must ensure that he or she also take the steps required under 35 U.S.C. 154(b)(4)(A) in a timely manner. Nothing in the request for recalculation should be construed as providing an alternative time frame for commencing a civil action under 35 U.S.C. 154(b)(4)(A).

Any questions concerning this decision should be directed to the Office of Patent Legal Administration at 571-272-7702.

UNITED STATES PATENT AND TRADEMARK OFFICE

UNITED STATES DEPARTMENT OF COMMERCE
United States Patent and Trademark Office
Address: COMMISSIONER FOR PATENTS
P.O. Box 1450
Alexandria, Virginia 22313-1450
www.uspto.gov

INTELLECTUAL PROPERTY MANAGEMENT
BOEING MANAGEMENT COMPANY
P.O. BOX 2515
MAIL CODE 110-SD54
SEAL BEACH, CA 90740-1515

Mail Date: 04/20/2010

Applicant	: Brian J. Tillotson	: DECISION ON REQUEST FOR
Patent Number	: 7623065	: RECALCULATION of PATENT
Issue Date	: 11/24/2009	: TERM ADJUSTMENT IN VIEW
Appliction No	: 11/420,531	: OF WYETH AND NOTICE OF INTENT TO
Filed	: 05/26/2006	: ISSUE CERTIFICATE OF CORRECTION
		:

The Request for Recalculation is **GRANTED** to the extent indicated.

The patent term adjustment has been determined to be **852** days. The USPTO will *sua sponte* issue a certificate of correction reflecting the amount of PTA days determined by the recalculation.

Prior to the issuance of the certificate of correction, the USPTO will afford patentee an opportunity to be heard and request reconsideration. Accordingly, patentee has **one month or thirty (30) days**, whichever is longer, to file a request for reconsideration of this patent term adjustment calculation. See 35 U.S.C. 154(b)(3)(B)(ii) and 37 CFR 1.322(a)(4). No extensions of time will be granted under 37 CFR 1.136.

Patentee should use document code PET.OP if electronically filing a request for reconsideration of this patent term adjustment calculation. The patentee must also include the information required by 37 CFR 1.705(b)(2) and the fee required by 37 CFR 1.18(e). If patentee does not file a timely request for reconsideration of this patent term adjustment calculation including the information required by 37 CFR 1.705(b)(2) and the fee required by 37 CFR 1.18(e), the USPTO will issue a certificate of correction reflecting the PTA determination noted above.

Patentee should be aware that in order to preserve the right to review in the United States District Court for the District of Columbia of the USPTO patent term adjustment determination, patentee must ensure that he or she also take the steps required under 35 U.S.C. 154(b)(4)(A) in a timely manner. Nothing in the request for recalculation should be construed as providing an alternative time frame for commencing a civil action under 35 U.S.C. 154(b)(4)(A).

Any questions concerning this decision should be directed to the Office of Patent Legal Administration at 571-272-7702.

UNITED STATES PATENT AND TRADEMARK OFFICE

Commissioner for Patents
United States Patent and Trademark Office
P.O. Box 1450
Alexandria, VA 22313-1450
www.uspto.gov

JOSE OLALDE RANGEL
519 CLEVELAND STREET
SUITE 101
CLEARWATER FL 33755

COPY MAILED

MAR 26 2008

OFFICE OF PETITIONS

In re Application of	:	
Olalde Rangel, Jose Angel	:	
Application No. 11/420,533	:	DECISION ON PETITION
Filed: November 16, 2006	:	
Title: Hepato Phyto-Nutraceutical Synergistic Composition	:	

This is a decision on the petition under the unintentional provisions of 37 CFR 1.137(b), filed March 4, 2008, to revive the above-identified application.

The petition is **GRANTED**.

The petition satisfies the requirements of 37 CFR 1.137(b) in that petitioner has supplied (1) the reply in the form of an Amendment, (2) the petition fee, and (3) a proper statement of unintentional delay.

Telephone inquiries concerning this decision should be directed to the undersigned at (571) 272-3206.

This matter is being referred to Technology Center 1655 for further examination on the merits.

Liana Walsh
Petitions Examiner
Office of Petitions

UNITED STATES PATENT AND TRADEMARK OFFICE

Commissioner for Patents
United States Patent and Trademark Office
P.O. Box 1450
Alexandria, VA 22313-1450
www.uspto.gov

GEOFFREY E. DOBBIN, PATENT ATTORNEY
4278 SOUTH 6220 WEST
WEST VALLEY CITY UT 84128-6501

COPY MAILED
FEB 25 2010

In re Application of	:	
Steven D. Jensen	:	
Application No. 11/420,536	:	DECISION ON PETITION
Filed: May 26, 2006	:	
Attorney Docket No. GDCAO01F	:	

This is a decision on the petition under the unintentional provisions of 37 CFR 1.137(b), filed December 4, 2009, to revive the above-identified application.

The petition is **GRANTED**.

This application became abandoned for failure to timely pay the issue and publication fees on or before March 3, 2009, as required by the Notice of Allowance and Fee(s) Due, mailed December 3, 2008. Accordingly, the date of abandonment of this application is March 4, 2009. The Notice of Abandonment was mailed March 31, 2009.

The petition satisfies the requirements of 37 CFR 1.137(b) in that petitioner has supplied (1) the reply in the form of payment of the issue fee of $755 and the publication fee of $300 b k, (2) the petition fee of $810; and (3) a proper statement of unintentional delay.

It is not apparent whether the person signing the statement of unintentional delay was in a position to have firsthand or direct knowledge of the facts and circumstances of the delay at issue. Nevertheless, such statement is being treated as having been made as the result of a reasonable inquiry into the facts and circumstances of such delay. See 37 CFR 10.18(b) and Changes to Patent Practice and Procedure; Final Rule Notice, 62 Fed. Reg. 53131, 53178 (October 10, 1997), 1203 Off. Gaz. Pat. Office 63, 103 (October 21, 1997). In the event that such an inquiry has not been made, petitioner must make such an inquiry. If such inquiry results in the discovery that it is not correct that the entire delay in filing the required reply from the due date for the reply until the filing of a grantable petition pursuant to 37 CFR 1.137(b) was unintentional, petitioner must notify the Office.

Telephone inquiries concerning this decision should be directed to Terri Johnson at (571) 272-2991.

This application is being referred to the Office of Data Management for processing into a patent.

Terri Johnson
Petitions Examiner
Office of Petitions

UNITED STATES PATENT AND TRADEMARK OFFICE

Commissioner for Patents
United States Patent and Trademark Office
P.O. Box 1450
Alexandria, VA 22313-1450
www.uspto.gov

COPY MAILED

FEB 20 2007

OFFICE OF PETITIONS

GORDON & JACOBSON, P.C.
60 LONG RIDGE ROAD
SUITE 407
STAMFORD, CT 06902

In re Application of :
Varada, Yeo, Marty, and Shanley :
Application No. 11/420,567 : DECISION NOTING JOINDER
Filed: May 26, 2006 :
Attorney Docket No. **TRA-110** :
For: METHODS AND APPARATUS FOR FAST ETHERNET LINK SWITCHOVER IN THE EVENT OF A LINK FAILURE

This is in response to the petition under 37 CFR 1.47(a), filed December 11, 2006, and the "Submittal of Declaration and Power of Attorney", filed December 27, 2006.

In view of the **joinder** of the inventor Marty, further consideration under 37 CFR 1.47(a) is not necessary. This application does not have any Rule 1.47(a) status and no such status should appear on the file wrapper. This application need not be returned to this Office for further consideration under 37 CFR 1.47(a).

The *Manual of Patent Examining Procedure* ("MPEP"), § 409.03(j) provides that "[i]n the event the previously non-signing inventor decides to join the application by filing an executed oath or declaration complying with 37 CFR 1.63, the oath or declaration will be placed in the application file."

Accordingly, the declaration executed by all joint inventors is noted and made of record.

This application is being directed to the Office of Initial Patent Examination for further processing.

Telephone inquiries regarding this communication should be directed to the undersigned at (571) 272-3222.

Kenya A. McLaughlin
Petitions Attorney
Office of Petitions

UNITED STATES PATENT AND TRADEMARK OFFICE

UNITED STATES DEPARTMENT OF COMMERCE
United States Patent and Trademark Office
Address: COMMISSIONER FOR PATENTS
P.O. Box 1450
Alexandria, Virginia 22313-1450
www.uspto.gov

HONEYWELL/FOGG
Patent Services
101 Columbia Road
P.O Box 2245
Morristown, NJ 07962-2245

Mail Date: 04/20/2010

Applicant	: Steven H. Thomas	: DECISION ON REQUEST FOR
Patent Number	: 7652615	: RECALCULATION of PATENT
Issue Date	: 01/26/2010	: TERM ADJUSTMENT IN VIEW
Appliction No	: 11/420,574	: OF WYETH AND NOTICE OF INTENT TO
Filed	: 05/26/2006	: ISSUE CERTIFICATE OF CORRECTION
		:

The Request for Recalculation is **GRANTED** to the extent indicated.

The patent term adjustment has been determined to be **544** days. The USPTO will *sua sponte* issue a certificate of correction reflecting the amount of PTA days determined by the recalculation.

Prior to the issuance of the certificate of correction, the USPTO will afford patentee an opportunity to be heard and request reconsideration. Accordingly, patentee has **one month or thirty (30) days**, whichever is longer, to file a request for reconsideration of this patent term adjustment calculation. See 35 U.S.C. 154(b)(3)(B)(ii) and 37 CFR 1.322(a)(4). No extensions of time will be granted under 37 CFR 1.136.

Patentee should use document code PET.OP if electronically filing a request for reconsideration of this patent term adjustment calculation. The patentee must also include the information required by 37 CFR 1.705(b)(2) and the fee required by 37 CFR 1.18(e). If patentee does not file a timely request for reconsideration of this patent term adjustment calculation including the information required by 37 CFR 1.705(b)(2) and the fee required by 37 CFR 1.18(e), the USPTO will issue a certificate of correction reflecting the PTA determination noted above.

Patentee should be aware that in order to preserve the right to review in the United States District Court for the District of Columbia of the USPTO patent term adjustment determination, patentee must ensure that he or she also take the steps required under 35 U.S.C. 154(b)(4)(A) in a timely manner. Nothing in the request for recalculation should be construed as providing an alternative time frame for commencing a civil action under 35 U.S.C. 154(b)(4)(A).

Any questions concerning this decision should be directed to the Office of Patent Legal Administration at 571-272-7702.

DATE 4/27/07 APPLICATION NUMBER 11/420585

DOC CODE PETDEC DOC DATE 5/3/07

DELIVER THE ATTACHED FIFLE/DOCUMENT TO THE TC SCANNING CENTER

CONTRACTOR: THE ATTACHED FILE/DOCUMENT MUST BE INDEXED AND SCANNED INTO IFW WITHIN **8** WORK HOURS; UPLOADING OF THE SCANNED IMAGES SHOULD OCCUR NO LATER THAN **16** WORK HOURS FOLLOWING RECEIPT OF THIS REQUEST

. AFTER SCANNING, ORIGINAL DOCUMENTS SHOULD BE BOXED IN ACCORDANCE WITH INSTRUCTIONS

UNITED STATES PATENT AND TRADEMARK OFFICE

Commissioner for Patents
United States Patent and Trademark Office
P.O. Box 1450
Alexandria, VA 22313-1450
www.uspto.gov

COPY MAILED

MAY 03 2007

OFFICE OF PETITIONS

HAYNES AND BOONE, LLP
901 MAIN STREET, SUITE 3100
DALLAS TX 75202

In re Application of

GANANATHAN, Ranjit D.
Application No. 11/420,585
Filed: May 26, 2006
Attorney Docket No. **23667.389**

DECISION ON PETITION
TO WITHDRAW
FROM RECORD

This is a decision on the Request to Withdraw as attorney or agent of record under 37 C.F.R. § 1.36(b), filed February 07, 2007.

The request is **NOT APPROVED**.

A grantable request to withdraw as attorney/agent of record must be signed by every attorney/agent seeking to withdraw or contain a clear indication that one attorney is signing on behalf of another/others. A request to withdraw will not be approved unless at least 30 (thirty) days would remain between the date of approval and the later of the expiration date of a time to file a response or the expiration date of the maximum time period which can be extended under 37 C.F.R. § 1.136(a).

The request cannot be approved because no reasons for withdrawal have been provided. The Office cannot, at this time, determine whether practitioner's request is one of the mandatory or permissive reasons enumerated in 37 CFR 10.40. Any subsequent requests must include reasons for withdrawal. Please note that there is a space provided for on PTO/SB/83 (Request to Withdraw as Attorney or Agent) to supply practitioner's reasons.

All future communications from the Office will continue to be directed to the above-listed address until otherwise notified by applicant.

Telephone inquiries concerning this decision should be directed to Tredelle Jackson at 571-272- 2783.

Monica A. Graves
Petitions Examiner
Office of Petitions

cc: **TODD MATTINGLY**
KING & SPALDING, L.L.P.
1100 LOUISIANA
SUITE 4000
HOUSTON, TX 77002

UNITED STATES PATENT AND TRADEMARK OFFICE

Commissioner for Patents
United States Patent and Trademark Office
P.O. Box 1450
Alexandria, VA 22313-1450
www.uspto.gov

COPY MAILED

DEC 09 2009

OFFICE OF PETITIONS

THADDIUS J. CARVIS
102 NORTH KING STREET
LEESBURG VA 20176

In re Application of
Randall S. Blaun
Application No. 11/420,586
Filed: May 26, 2006
Attorney Docket No. Blaun P1003

ON PETITION

This is a decision in response to the petition, filed September 16, 2009, to revive the above-identified application under the provisions of 37 CFR 1.137(b).

The petition is **GRANTED**.

The application became abandoned for failure to reply in a timely manner to the non-final Office action mailed January 23, 2009, which set a shortened statutory period for reply of three (3) months. No extension of time under the provisions of 37 CFR 1.136(a) was obtained. Accordingly, the application became abandoned on April 24, 2009. A Notice of Abandonment was mailed on September 16, 2009.

The petition satisfies the requirements of 37 CFR 1.137(b) in that petitioner has supplied (1) the reply in the form of an amendment; (2) the petition fee of $810; and (3) an adequate statement of unintentional delay.

This application is being referred to Technology Center AU 1794 for appropriate action by the Examiner in the normal course of business on the reply received September 16, 2009.

Telephone inquiries concerning this decision should be directed to the undersigned at (571) 272-3204. Inquiries relating to further prosecution should be directed to the Technology Center.

Sherry D. Brinkley
Petitions Examiner
Office of Petitions

UNITED STATES PATENT AND TRADEMARK OFFICE

UNITED STATES DEPARTMENT OF COMMERCE
United States Patent and Trademark Office
Address: COMMISSIONER FOR PATENTS
P.O. Box 1450
Alexandria, Virginia 22313-1450
www.uspto.gov

SENNIGER POWERS LLP
100 NORTH BROADWAY
17TH FLOOR
ST LOUIS, MO 63102

Mail Date: 04/20/2010

Applicant	: Donald E. Morgan	: DECISION ON REQUEST FOR
Patent Number	: 7638741	: RECALCULATION of PATENT
Issue Date	: 12/29/2009	: TERM ADJUSTMENT IN VIEW
Appliction No	: 11/420,598	: OF WYETH AND NOTICE OF INTENT TO
Filed	: 05/26/2006	: ISSUE CERTIFICATE OF CORRECTION
		:

The Request for Recalculation is **GRANTED** to the extent indicated.

The patent term adjustment has been determined to be **439** days. The USPTO will *sua sponte* issue a certificate of correction reflecting the amount of PTA days determined by the recalculation.

Prior to the issuance of the certificate of correction, the USPTO will afford patentee an opportunity to be heard and request reconsideration. Accordingly, patentee has **one month or thirty (30) days**, whichever is longer, to file a request for reconsideration of this patent term adjustment calculation. See 35 U.S.C. 154(b)(3)(B)(ii) and 37 CFR 1.322(a)(4). No extensions of time will be granted under 37 CFR 1.136.

Patentee should use document code PET.OP if electronically filing a request for reconsideration of this patent term adjustment calculation. The patentee must also include the information required by 37 CFR 1.705(b)(2) and the fee required by 37 CFR 1.18(e). If patentee does not file a timely request for reconsideration of this patent term adjustment calculation including the information required by 37 CFR 1.705(b)(2) and the fee required by 37 CFR 1.18(e), the USPTO will issue a certificate of correction reflecting the PTA determination noted above.

Patentee should be aware that in order to preserve the right to review in the United States District Court for the District of Columbia of the USPTO patent term adjustment determination, patentee must ensure that he or she also take the steps required under 35 U.S.C. 154(b)(4)(A) in a timely manner. Nothing in the request for recalculation should be construed as providing an alternative time frame for commencing a civil action under 35 U.S.C. 154(b)(4)(A).

Any questions concerning this decision should be directed to the Office of Patent Legal Administration at 571-272-7702.

UNITED STATES PATENT AND TRADEMARK OFFICE

Commissioner for Patents
United States Patent and Trademark Office
P.O. Box 1450
Alexandria, VA 22313-1450
www.uspto.gov

BAXTER HEALTHCARE CORPORATION
1 BAXTER PARKWAY
DF2-2E
DEERFIELD, IL 60015

COPY MAILED

MAR 2 7 2007

OFFICE OF PETITIONS

In re Application of :
Childers, Keeling, and Pan :
Application No. 11/420,608 :
Filed: May 26, 2006 :
Atty. Docket No. IR 04-7589 :
For: Automated Dialysis System Driven :
By Gravity and Vacuum :

Decision According Status
Under 37 CFR 1.47(a)

This is a decision on the petition under 37 CFR 1.47(a), filed December 7, 2006.

The petition is **granted**.

The above-identified application and papers have been reviewed and found in compliance with 37 CFR 1.47(a). This application is hereby accorded Rule 1.47(a) status.

As provided in Rule 1.47(c), this Office will forward notice of this application's filing to the non-signing inventor at the address given in the petition. Notice of the filing of this application will also be published in the Official Gazette.

The Office of Initial Patent Examination will be informed of the instant decision so that it may continue to prepare the application for examination.

Telephone inquiries regarding this communication should be directed to Petitions Attorney Steven Brantley at (571) 272-3203.

Charles Steven Brantley
Senior Petitions Attorney
Office of Petitions

UNITED STATES PATENT AND TRADEMARK OFFICE

Commissioner for Patents
United States Patent and Trademark Office
P.O. Box 1450
Alexandria, VA 22313-1450
www.uspto.gov

Li Pan
1643 Oakwood Ave.
Arcadia, CA 91006

COPY MAILED

MAR 2 7 2007

OFFICE OF PETITIONS

In re Application of :
Childers, Keeling, and Pan :
Application No. 11/420,608 :
Filed: May 26, 2006 :
Atty. Docket No. IR 04-7589 :
For: Automated Dialysis System Driven :
By Gravity and Vacuum :

Letter

Mr. Pan:

You are named as a joint inventor in the above identified United States patent application.

Should a patent be granted on the application you will be designated therein as a joint inventor.

As a named inventor you, or a registered patent attorney or agent on your behalf, have the right to obtain copies of any papers in the file wrapper. Information regarding how to pay for and order a copy of the application, or a specific paper in the application, should be directed to Certification Division at (703) 308-9726 or 1 (800) 972-6382 (outside the Washington D.C. area).

General requests for information regarding the application should be directed to the File Information Unit at (703) 308-2733.

Telephone inquiries regarding this communication may be directed to Petitions Attorney Steven Brantley at (571) 272-3203.

Charles Steven Brantley
Petitions Attorney
Office of Petitions

cc: BAXTER HEALTHCARE CORPORATION
1 BAXTER PARKWAY
DF2-2E
DEERFIELD, IL 60015

UNITED STATES PATENT AND TRADEMARK OFFICE

UNITED STATES DEPARTMENT OF COMMERCE
United States Patent and Trademark Office
Address: COMMISSIONER FOR PATENTS
P.O. Box 1450
Alexandria, Virginia 22313-1450
www.uspto.gov

TEXAS INSTRUMENTS INCORPORATED
P O BOX 655474, M/S 3999
DALLAS, TX 75265

Mail Date: 04/20/2010

Applicant	: Karthik Ramasubramanian	: DECISION ON REQUEST FOR
Patent Number	: 7583764	: RECALCULATION of PATENT
Issue Date	: 09/01/2009	: TERM ADJUSTMENT IN VIEW
Appliction No	: 11/420,619	: OF WYETH AND NOTICE OF INTENT TO
Filed	: 05/26/2006	: ISSUE CERTIFICATE OF CORRECTION
		:

The Request for Recalculation is **GRANTED** to the extent indicated.

The patent term adjustment has been determined to be **466** days. The USPTO will *sua sponte* issue a certificate of correction reflecting the amount of PTA days determined by the recalculation.

Prior to the issuance of the certificate of correction, the USPTO will afford patentee an opportunity to be heard and request reconsideration. Accordingly, patentee has **one month or thirty (30) days**, whichever is longer, to file a request for reconsideration of this patent term adjustment calculation. See 35 U.S.C. 154(b)(3)(B)(ii) and 37 CFR 1.322(a)(4). No extensions of time will be granted under 37 CFR 1.136.

Patentee should use document code PET.OP if electronically filing a request for reconsideration of this patent term adjustment calculation. The patentee must also include the information required by 37 CFR 1.705(b)(2) and the fee required by 37 CFR 1.18(e). If patentee does not file a timely request for reconsideration of this patent term adjustment calculation including the information required by 37 CFR 1.705(b)(2) and the fee required by 37 CFR 1.18(e), the USPTO will issue a certificate of correction reflecting the PTA determination noted above.

Patentee should be aware that in order to preserve the right to review in the United States District Court for the District of Columbia of the USPTO patent term adjustment determination, patentee must ensure that he or she also take the steps required under 35 U.S.C. 154(b)(4)(A) in a timely manner. Nothing in the request for recalculation should be construed as providing an alternative time frame for commencing a civil action under 35 U.S.C. 154(b)(4)(A).

Any questions concerning this decision should be directed to the Office of Patent Legal Administration at 571-272-7702.

UNITED STATES PATENT AND TRADEMARK OFFICE

UNITED STATES DEPARTMENT OF COMMERCE
United States Patent and Trademark Office
Address: COMMISSIONER FOR PATENTS
P.O. Box 1450
Alexandria, Virginia 22313-1450
www.uspto.gov

GENERAL ELECTRIC COMPANY
GLOBAL RESEARCH
ONE RESEARCH CIRCLE
PATENT DOCKET RM. BLDG. K1-4A59
NISKAYUNA, NY 12309

Mail Date: 04/20/2010

Applicant	: HERBERT KOPECEK	: DECISION ON REQUEST FOR
Patent Number	: 7651069	: RECALCULATION of PATENT
Issue Date	: 01/26/2010	: TERM ADJUSTMENT IN VIEW
Appliction No	: 11/420,622	: OF WYETH AND NOTICE OF INTENT TO
Filed	: 05/26/2006	: ISSUE CERTIFICATE OF CORRECTION
		:

The Request for Recalculation is **GRANTED** to the extent indicated.

The patent term adjustment has been determined to be **487** days. The USPTO will *sua sponte* issue a certificate of correction reflecting the amount of PTA days determined by the recalculation.

Prior to the issuance of the certificate of correction, the USPTO will afford patentee an opportunity to be heard and request reconsideration. Accordingly, patentee has **one month or thirty (30) days**, whichever is longer, to file a request for reconsideration of this patent term adjustment calculation. See 35 U.S.C. 154(b)(3)(B)(ii) and 37 CFR 1.322(a)(4). No extensions of time will be granted under 37 CFR 1.136.

Patentee should use document code PET.OP if electronically filing a request for reconsideration of this patent term adjustment calculation. The patentee must also include the information required by 37 CFR 1.705(b)(2) and the fee required by 37 CFR 1.18(e). If patentee does not file a timely request for reconsideration of this patent term adjustment calculation including the information required by 37 CFR 1.705(b)(2) and the fee required by 37 CFR 1.18(e), the USPTO will issue a certificate of correction reflecting the PTA determination noted above.

Patentee should be aware that in order to preserve the right to review in the United States District Court for the District of Columbia of the USPTO patent term adjustment determination, patentee must ensure that he or she also take the steps required under 35 U.S.C. 154(b)(4)(A) in a timely manner. Nothing in the request for recalculation should be construed as providing an alternative time frame for commencing a civil action under 35 U.S.C. 154(b)(4)(A).

Any questions concerning this decision should be directed to the Office of Patent Legal Administration at 571-272-7702.

UNITED STATES PATENT AND TRADEMARK OFFICE

Commissioner for Patents
United States Patent and Trademark Office
P.O. Box 1450
Alexandria, VA 22313-1450
www.uspto.gov

AKERMAN SENTERFITT
P.O. BOX 3188
WEST PALM BEACH, FL 33402-3188

MAILED

JAN 07 2010

OFFICE OF PETITIONS

In re Application of	:	
Kurt James Long	:	
Application No. 11/420,645	:	DECISION ON PETITION
Filed: May 26, 2006	:	TO WITHDRAW
Attorney Docket No. 8281-1	:	FROM RECORD
	:	

This is a decision on the Request to Withdraw as attorney or agent of record under 37 C.F.R. § 1.36(b), filed November 4, 2009.

The request is **APPROVED**.

The request was signed by Mark D. Passler on behalf of the practitioners of record associated with Customer Number 30448.

Applicant is reminded that there is no attorney of record at this time.

All future correspondence will be directed to inventor Kurt James Long at the address indicated below.

Telephone inquiries concerning this decision should be directed to Irvin Dingle at (571) 272-3210.

Irvin Dingle
Petitions Examiner
Office of Petitions

cc: Kurt James Long
Fair Warning, Inc.
1945 Carolina Avenue NE
St. Petersburg, FL 33703

UNITED STATES PATENT AND TRADEMARK OFFICE

UNITED STATES DEPARTMENT OF COMMERCE
United States Patent and Trademark Office
Address: COMMISSIONER FOR PATENTS
P.O. Box 1450
Alexandria, Virginia 22313-1450
www.uspto.gov

APPLICATION NUMBER	FILING OR 371(C) DATE	FIRST NAMED APPLICANT	ATTY. DOCKET NO./TITLE
11/420,645	05/26/2006	Kurt James Long	8281-1

CONFIRMATION NO. 1366

POWER OF ATTORNEY NOTICE

30448
AKERMAN SENTERFITT
P.O. BOX 3188
WEST PALM BEACH, FL 33402-3188

OC000000039469838

Date Mailed: 01/06/2010

NOTICE REGARDING CHANGE OF POWER OF ATTORNEY

This is in response to the Power of Attorney filed 11/04/2009.

- The withdrawal as attorney in this application has been accepted. Future correspondence will be mailed to the new address of record. 37 CFR 1.33.

/idingle/

Office of Data Management, Application Assistance Unit (571) 272-4000, or (571) 272-4200, or 1-888-786-0101

UNITED STATES PATENT AND TRADEMARK OFFICE

UNITED STATES DEPARTMENT OF COMMERCE
United States Patent and Trademark Office
Address: COMMISSIONER FOR PATENTS
P.O. Box 1450
Alexandria, Virginia 22313-1450
www.uspto.gov

APPLICATION NUMBER	FILING OR 371(C) DATE	FIRST NAMED APPLICANT	ATTY. DOCKET NO./TITLE
11/420,645	05/26/2006	Kurt James Long	8281-1

CONFIRMATION NO. 1366

POA ACCEPTANCE LETTER

Kurt James Long
1945 Carolina Avenue NE
St. Petersburg, FL 33703

OC000000039469869

Date Mailed: 01/06/2010

NOTICE OF ACCEPTANCE OF POWER OF ATTORNEY

This is in response to the Power of Attorney filed 11/04/2009.

The Power of Attorney in this application is accepted. Correspondence in this application will be mailed to the above address as provided by 37 CFR 1.33.

/idingle/

Office of Data Management, Application Assistance Unit (571) 272-4000, or (571) 272-4200, or 1-888-786-0101

UNITED STATES PATENT AND TRADEMARK OFFICE

Commissioner for Patents
United States Patent and Trademark Office
P.O. Box 1450
Alexandria, VA 22313-1450
www.uspto.gov

DUBOIS, BRYANT, CAMPBELL & SCHWARTZ, LLP
700 LAVACA STREET
SUITE 1300
AUSTIN TX 78701

COPY MAILED

JAN 2 2 2008

OFFICE OF PETITIONS

Applicant: Debold
Appl. No.: 11/420,660
Filing Date: May 26, 2006
Title: COMPOSITION TRANSFER
Attorney Docket No.: 1525-700USPT
Pub. No.: 2006/0265888 A1
Pub. Date: November 30, 2006

This is a decision on the request for a corrected patent application publication under 37 CFR 1.221(b), received on January 24, 2007, for the above-identified application

The request is DISMISSED.

Applicant requests that the application be republished because the patent application publication contains a material error in dependent claim 4 wherein "the substantially uninterrupted transparent surface is on a second transparent substrate" is misprinted as "the substantially uninterrupted transparent surface is oil a second transparent substrate".

Applicant has appointed an attorney or agent **to conduct all business** before the Patent and Trademark Office. Double correspondence with an applicant and applicant's attorney or agent will not be undertaken. Accordingly, applicant is required to conduct all future correspondence with this Office through the attorney or agent of record. See 37 CFR 1.33.

The request for corrected publication is not properly signed by the attorney of record. While the paper is not properly signed a draft response is below.

37 CFR 1.221 (b) is applicable "only when the Office makes **a material mistake** which is apparent from Office records.... Any request for a corrected publication or revised patent application publication other than provided as provided in paragraph (a) of this section must be filed within two months from the date of the patent application publication. This period is not extendable." A material mistake must affect the public's ability to appreciate the technical disclosure of the patent application publication, to determine the scope of the patent application

publication, or to determine the scope of the provisional rights that an applicant may seek to enforce upon issuance of a patent. [1]

The error noted by requestor in dependent claim 4 wherein "the substantially uninterrupted transparent surface is on a second transparent substrate" is misprinted as "the substantially uninterrupted transparent surface is oil a second transparent substrate" may be an Office error, but it is not a material Office error under 37 CFR 1.221. The substitution of the word "on" by "oil" in the claim is a minor typographical error, which is clearly understandable to of ordinary skill. The typographical error does not affect the public's ability to appreciate the technical disclosure of the patent application publication, to determine the scope of the patent application publication, or to determine the scope of the provisional rights that an applicant may seek to enforce upon issuance of a patent.

The applicant is advised that a "request for republication of an application previously published" may be filed under 37 CFR 1.221(a). Such a request for republication "must include a copy of the application compliance with the Office's electronic filing system requirements and be accompanied by the publication fee set forth in § 1.18(d) and the processing fee set forth in § 1.17(i)." If the request for republication does not comply with the electronic filing system requirements, the republication will not take place and the publication fee set forth in § 1.18(d) will be refunded. The processing fee will be retained.

Any request for republication under 37 CFR 1.221(a), must be submitted via the EFS system as a "Pre-Grant Publication" and questions or request for reconsideration of the decision, should be addressed as follows:

By mail to: Mail Stop PGPUB
Commissioner for Patents
P.O. Box 1450
Alexandria, Va. 22313-1450

By facsimile: 571-273-8300

Inquiries relating to this matter may be directed to Mark Polutta at (571) 272-7709.

Mark Polutta
Senior Legal Advisor
Office of Patent Legal Administration
Office of the Deputy Commissioner
for Patent Examination Policy

[1] Changes to Implement Eighteen-Month Publication of Patent Applications, 65 FR 57023, 57038 (Sept. 20, 2000), 1239, Off. Gaz. Pat. Office Notices 63, 75 (Oct. 10, 2000) (final rule).

UNITED STATES PATENT AND TRADEMARK OFFICE

UNITED STATES DEPARTMENT OF COMMERCE
United States Patent and Trademark Office
Address: COMMISSIONER FOR PATENTS
P.O. Box 1450
Alexandria, Virginia 22313-1450
www.uspto.gov

HULSEY IP INTELLECTUAL PROPERTY LAWYERS, P.C.
919 Congress Avenue, Suite 919
AUSTIN, TX 78701

Mail Date: 04/21/2010

Applicant	: William W. Cowan	: DECISION ON REQUEST FOR
Patent Number	: 7644283	: RECALCULATION of PATENT
Issue Date	: 01/05/2010	: TERM ADJUSTMENT IN VIEW
Appliction No	: 11/420,665	: OF WYETH AND NOTICE OF INTENT TO
Filed	: 05/26/2006	: ISSUE CERTIFICATE OF CORRECTION
		:

The Request for Recalculation is **GRANTED** to the extent indicated.

The patent term adjustment has been determined to be **493** days. The USPTO will *sua sponte* issue a certificate of correction reflecting the amount of PTA days determined by the recalculation.

Prior to the issuance of the certificate of correction, the USPTO will afford patentee an opportunity to be heard and request reconsideration. Accordingly, patentee has **one month or thirty (30) days**, whichever is longer, to file a request for reconsideration of this patent term adjustment calculation. See 35 U.S.C. 154(b)(3)(B)(ii) and 37 CFR 1.322(a)(4). No extensions of time will be granted under 37 CFR 1.136.

Patentee should use document code PET.OP if electronically filing a request for reconsideration of this patent term adjustment calculation. The patentee must also include the information required by 37 CFR 1.705(b)(2) and the fee required by 37 CFR 1.18(e). If patentee does not file a timely request for reconsideration of this patent term adjustment calculation including the information required by 37 CFR 1.705(b)(2) and the fee required by 37 CFR 1.18(e), the USPTO will issue a certificate of correction reflecting the PTA determination noted above.

Patentee should be aware that in order to preserve the right to review in the United States District Court for the District of Columbia of the USPTO patent term adjustment determination, patentee must ensure that he or she also take the steps required under 35 U.S.C. 154(b)(4)(A) in a timely manner. Nothing in the request for recalculation should be construed as providing an alternative time frame for commencing a civil action under 35 U.S.C. 154(b)(4)(A).

Any questions concerning this decision should be directed to the Office of Patent Legal Administration at 571-272-7702.

UNITED STATES PATENT AND TRADEMARK OFFICE

UNITED STATES DEPARTMENT OF COMMERCE
United States Patent and Trademark Office
Address: COMMISSIONER FOR PATENTS
P.O. Box 1450
Alexandria, Virginia 22313-1450
www.uspto.gov

HULSEY IP INTELLECTUAL PROPERTY LAWYERS, P.C.
919 Congress Avenue, Suite 919
AUSTIN, TX 78701

Mail Date: 05/18/2010

Applicant : William W. Cowan
Patent Number : 7644283
Issue Date : 01/05/2010
Application No : 11/420,665
Filed : 05/26/2006

: NOTICE CONCERNING IMPROPER
: CALCULATION OF PATENT TERM
: ADJUSTMENT BASED UPON USPTO
: IMPROPERLY MEASURING REDUCTION
: PERIOD UNDER 37 CFR 1.704(c)(10).

The United States Patent and Trademark Office (USPTO) discovered that in processing the recent recalculation decisions mailed in response to patentee's filed Request for Recalculation of Patent Term Adjustment in view of Wyeth, the USPTO improperly measured the reduction period for reductions under 37 CFR 1.704(c)(10). Pursuant to 37 CFR 1.704(c)(10), patentee's reduction begins on the date of filing the amendment under 37 CFR 1.312 ("1.312 amendment") or other related paper and ends on the date that the Office mails a response to the filing of the 1.312 amendment or other paper. It has been discovered that during the recalculation, the calculation failed to the limit the reduction to the mail date of the response to the 1.312 amendment or other paper. Accordingly, patentee's reductions were greater than warranted.

This notice **VACATES** the previous GRANTED request for recalculation and provides patentee with a revised GRANTED recalculation.

The patent term adjustment has been determined to be **568** days. The USPTO will *sua sponte* issue a certificate of correction reflecting the amount of patent term adjustment (PTA) days determined by the recalculation.

Prior to the issuance of the certificate of correction, the USPTO will afford patentee an opportunity to be heard and request reconsideration. Accordingly, patentee has **one month or thirty (30) days** from the mail date of this notice, whichever is longer, to file a request for reconsideration of this PTA calculation. See 35 U.S.C. § 154(b)(3)(B)(ii) and 37 CFR 1.322(a)(4).

Patentee should use document code PET.OP if electronically filing a request for reconsideration of this PTA calculation. The patentee must also include the information required by 37 CFR 1.705(b)(2), and the fee required by 37 CFR 1.18(e). If patentee does not file a timely request for reconsideration of this PTA calculation, including the information required by 37 CFR 1.705(b)(2) and the fee required by 37 CFR 1.18(e), the USPTO will issue a certificate of correction reflecting the PTA determination noted above.

Patentee should be aware that in order to preserve the right of review of the USPTO's PTA determination in the United States District Court for the District of Columbia, patentee must ensure that the steps required under 35 U.S.C. § 154 (b)(4) are taken in a timely manner. Nothing in the request for recalculation should be construed as providing an alternative time frame for commencing a civil action under 35 U.S.C. § 154(b)(4).

UNITED STATES PATENT AND TRADEMARK OFFICE

UNITED STATES DEPARTMENT OF COMMERCE
United States Patent and Trademark Office
Address: COMMISSIONER FOR PATENTS
P.O. Box 1450
Alexandria, Virginia 22313-1450
www.uspto.gov

INTELLECTUAL PROPERTY MANAGEMENT
BOEING MANAGEMENT COMPANY
P.O. BOX 2515
MAIL CODE 110-SD54
SEAL BEACH, CA 90740-1515

Mail Date: 04/20/2010

Applicant	: Russel W. Morris	: DECISION ON REQUEST FOR
Patent Number	: 7607608	: RECALCULATION of PATENT
Issue Date	: 10/27/2009	: TERM ADJUSTMENT IN VIEW
Appliction No	: 11/420,667	: OF WYETH AND NOTICE OF INTENT TO
Filed	: 05/26/2006	: ISSUE CERTIFICATE OF CORRECTION
		:

The Request for Recalculation is **GRANTED** to the extent indicated.

The patent term adjustment has been determined to be **475** days. The USPTO will *sua sponte* issue a certificate of correction reflecting the amount of PTA days determined by the recalculation.

Prior to the issuance of the certificate of correction, the USPTO will afford patentee an opportunity to be heard and request reconsideration. Accordingly, patentee has **one month or thirty (30) days**, whichever is longer, to file a request for reconsideration of this patent term adjustment calculation. See 35 U.S.C. 154(b)(3)(B)(ii) and 37 CFR 1.322(a)(4). No extensions of time will be granted under 37 CFR 1.136.

Patentee should use document code PET.OP if electronically filing a request for reconsideration of this patent term adjustment calculation. The patentee must also include the information required by 37 CFR 1.705(b)(2) and the fee required by 37 CFR 1.18(e). If patentee does not file a timely request for reconsideration of this patent term adjustment calculation including the information required by 37 CFR 1.705(b)(2) and the fee required by 37 CFR 1.18(e), the USPTO will issue a certificate of correction reflecting the PTA determination noted above.

Patentee should be aware that in order to preserve the right to review in the United States District Court for the District of Columbia of the USPTO patent term adjustment determination, patentee must ensure that he or she also take the steps required under 35 U.S.C. 154(b)(4)(A) in a timely manner. Nothing in the request for recalculation should be construed as providing an alternative time frame for commencing a civil action under 35 U.S.C. 154(b)(4)(A).

Any questions concerning this decision should be directed to the Office of Patent Legal Administration at 571-272-7702.

UNITED STATES PATENT AND TRADEMARK OFFICE

UNITED STATES DEPARTMENT OF COMMERCE
United States Patent and Trademark Office
Address: COMMISSIONER FOR PATENTS
P.O. Box 1450
Alexandria, Virginia 22313-1450
www.uspto.gov

ST. JUDE MEDICAL NEUROMODULATION DIVISION
6901 PRESTON ROAD
PLANO, TX 75024

Mail Date: 04/20/2010

Applicant	: John H. ERICKSON	: DECISION ON REQUEST FOR
Patent Number	: 7571007	: RECALCULATION of PATENT
Issue Date	: 08/04/2009	: TERM ADJUSTMENT IN VIEW
Appliction No	: 11/420,670	: OF WYETH AND NOTICE OF INTENT TO
Filed	: 05/26/2006	: ISSUE CERTIFICATE OF CORRECTION
		:

The Request for Recalculation is **GRANTED** to the extent indicated.

The patent term adjustment has been determined to be **203** days. The USPTO will *sua sponte* issue a certificate of correction reflecting the amount of PTA days determined by the recalculation.

Prior to the issuance of the certificate of correction, the USPTO will afford patentee an opportunity to be heard and request reconsideration. Accordingly, patentee has **one month or thirty (30) days**, whichever is longer, to file a request for reconsideration of this patent term adjustment calculation. See 35 U.S.C. 154(b)(3)(B)(ii) and 37 CFR 1.322(a)(4). No extensions of time will be granted under 37 CFR 1.136.

Patentee should use document code PET.OP if electronically filing a request for reconsideration of this patent term adjustment calculation. The patentee must also include the information required by 37 CFR 1.705(b)(2) and the fee required by 37 CFR 1.18(e). If patentee does not file a timely request for reconsideration of this patent term adjustment calculation including the information required by 37 CFR 1.705(b)(2) and the fee required by 37 CFR 1.18(e), the USPTO will issue a certificate of correction reflecting the PTA determination noted above.

Patentee should be aware that in order to preserve the right to review in the United States District Court for the District of Columbia of the USPTO patent term adjustment determination, patentee must ensure that he or she also take the steps required under 35 U.S.C. 154(b)(4)(A) in a timely manner. Nothing in the request for recalculation should be construed as providing an alternative time frame for commencing a civil action under 35 U.S.C. 154(b)(4)(A).

Any questions concerning this decision should be directed to the Office of Patent Legal Administration at 571-272-7702.

UNITED STATES PATENT AND TRADEMARK OFFICE

UNITED STATES DEPARTMENT OF COMMERCE
United States Patent and Trademark Office
Address: COMMISSIONER FOR PATENTS
P.O. Box 1450
Alexandria, Virginia 22313-1450
www.uspto.gov

DYKAS, SHAVER & NIPPER, LLP
P.O. BOX 877
BOISE, ID 83701-0877

Mail Date: 04/20/2010

Applicant	: TED E. NICHOLES	: DECISION ON REQUEST FOR
Patent Number	: 7588107	: RECALCULATION of PATENT
Issue Date	: 09/15/2009	: TERM ADJUSTMENT IN VIEW
Appliction No	: 11/420,676	: OF WYETH AND NOTICE OF INTENT TO
Filed	: 05/26/2006	: ISSUE CERTIFICATE OF CORRECTION
		:

The Request for Recalculation is **GRANTED** to the extent indicated.

The patent term adjustment has been determined to be **541** days. The USPTO will *sua sponte* issue a certificate of correction reflecting the amount of PTA days determined by the recalculation.

Prior to the issuance of the certificate of correction, the USPTO will afford patentee an opportunity to be heard and request reconsideration. Accordingly, patentee has **one month or thirty (30) days**, whichever is longer, to file a request for reconsideration of this patent term adjustment calculation. See 35 U.S.C. 154(b)(3)(B)(ii) and 37 CFR 1.322(a)(4). No extensions of time will be granted under 37 CFR 1.136.

Patentee should use document code PET.OP if electronically filing a request for reconsideration of this patent term adjustment calculation. The patentee must also include the information required by 37 CFR 1.705(b)(2) and the fee required by 37 CFR 1.18(e). If patentee does not file a timely request for reconsideration of this patent term adjustment calculation including the information required by 37 CFR 1.705(b)(2) and the fee required by 37 CFR 1.18(e), the USPTO will issue a certificate of correction reflecting the PTA determination noted above.

Patentee should be aware that in order to preserve the right to review in the United States District Court for the District of Columbia of the USPTO patent term adjustment determination, patentee must ensure that he or she also take the steps required under 35 U.S.C. 154(b)(4)(A) in a timely manner. Nothing in the request for recalculation should be construed as providing an alternative time frame for commencing a civil action under 35 U.S.C. 154(b)(4)(A).

Any questions concerning this decision should be directed to the Office of Patent Legal Administration at 571-272-7702.

UNITED STATES PATENT AND TRADEMARK OFFICE

UNITED STATES DEPARTMENT OF COMMERCE
United States Patent and Trademark Office
Address: COMMISSIONER FOR PATENTS
P.O. Box 1450
Alexandria, Virginia 22313-1450
www.uspto.gov

SEED INTELLECTUAL PROPERTY LAW GROUP PLLC
701 FIFTH AVENUE, SUITE 5400
SEATTLE, WA 98104-7092

Mail Date: 04/21/2010

Applicant	: Richard Sherman	: DECISION ON REQUEST FOR
Patent Number	: 7578628	: RECALCULATION of PATENT
Issue Date	: 08/25/2009	: TERM ADJUSTMENT IN VIEW
Appliction No	: 11/420,685	: OF WYETH AND NOTICE OF INTENT TO
Filed	: 05/26/2006	: ISSUE CERTIFICATE OF CORRECTION
		:

The Request for Recalculation is **GRANTED** to the extent indicated.

The patent term adjustment has been determined to be **432** days. The USPTO will *sua sponte* issue a certificate of correction reflecting the amount of PTA days determined by the recalculation.

Prior to the issuance of the certificate of correction, the USPTO will afford patentee an opportunity to be heard and request reconsideration. Accordingly, patentee has **one month or thirty (30) days**, whichever is longer, to file a request for reconsideration of this patent term adjustment calculation. See 35 U.S.C. 154(b)(3)(B)(ii) and 37 CFR 1.322(a)(4). No extensions of time will be granted under 37 CFR 1.136.

Patentee should use document code PET.OP if electronically filing a request for reconsideration of this patent term adjustment calculation. The patentee must also include the information required by 37 CFR 1.705(b)(2) and the fee required by 37 CFR 1.18(e). If patentee does not file a timely request for reconsideration of this patent term adjustment calculation including the information required by 37 CFR 1.705(b)(2) and the fee required by 37 CFR 1.18(e), the USPTO will issue a certificate of correction reflecting the PTA determination noted above.

Patentee should be aware that in order to preserve the right to review in the United States District Court for the District of Columbia of the USPTO patent term adjustment determination, patentee must ensure that he or she also take the steps required under 35 U.S.C. 154(b)(4)(A) in a timely manner. Nothing in the request for recalculation should be construed as providing an alternative time frame for commencing a civil action under 35 U.S.C. 154(b)(4)(A).

Any questions concerning this decision should be directed to the Office of Patent Legal Administration at 571-272-7702.

UNITED STATES PATENT AND TRADEMARK OFFICE

Commissioner for Patents
United States Patent and Trademark Office
P.O. Box 1450
Alexandria, VA 22313-1450
www.uspto.gov

Joseph R. Snyder
Townsend and Townsend and Crew, LLP
Two Embarcadero Center
Eighth Floor
San Francisco, CA 94111-3834

COPY MAILED

APR 18 2007

OFFICE OF PETITIONS

In re Application of	:	
Alby Abram et al.	:	
Application No. 11/420,700	:	DECISION ON PETITION
Filed: May 26, 2006	:	TO WITHDRAW
Attorney Docket No. 021706-002302US	:	FROM RECORD
	:	

This is a decision on the Request to Withdraw as attorney or agent of record under 37 C.F.R. § 1.36(b), filed January 23, 2007.

The request is **NOT APPROVED** as moot.

A review of the file record indicates that requestor herein and the attorneys associated with Customer Number 20350 were never given a power of attorney by applicant (or assignee) to prosecute this application. However, although the attorneys associated with Customer Number 20350: (1) do not have power of attorney in this patent application, but (2) have been employed or otherwise engaged in the proceedings in this patent application, the attorneys associated with Customer Number 20350 have been withdrawn from the present application and may not prepare or submit papers under 37 C.F.R. § 1.34, or correspond in any manner in this application unless appointed in an acceptable power of attorney under 37 C.F.R. § 1.32(b).

A power of attorney by assignee, Connetics Australia Party, Ltd. of this patent application, was filed on February 15, 2007. Accordingly, all future correspondence regarding this application will be directed to the new attorneys noted in the power of attorney of February 15, 2007.

Telephone inquires concerning this decision should be directed to Kimberly Inabinet at 571-272- 4618.

Frances Hicks
Petitions Examiner
Office of Petitions

cc: The Nath Law Group, PLLC
112 South West Street
Alexandria, VA 22314

UNITED STATES PATENT AND TRADEMARK OFFICE

UNITED STATES DEPARTMENT OF COMMERCE
United States Patent and Trademark Office
Address: COMMISSIONER FOR PATENTS
P.O. Box 1450
Alexandria, Virginia 22313-1450
www.uspto.gov

APPLICATION NUMBER	FILING OR 371 (c) DATE	FIRST NAMED APPLICANT	ATTY. DOCKET NO./TITLE
11/420,700	05/26/2006	Alby Abram	

CONFIRMATION NO. 1455

OC000000023390947

20529
NATH & ASSOCIATES
112 South West Street
Alexandria, VA 22314

Date Mailed: 04/16/2007

NOTICE OF ACCEPTANCE OF POWER OF ATTORNEY

This is in response to the Power of Attorney filed 02/15/2007.

The Power of Attorney in this application is accepted. Correspondence in this application will be mailed to the above address as provided by 37 CFR 1.33.

Frances Hicks

Office of Initial Patent Examination (571) 272-4000, or 1-800-PTO-9199

ATTORNEY/APPLICANT COPY

UNITED STATES PATENT AND TRADEMARK OFFICE

UNITED STATES DEPARTMENT OF COMMERCE
United States Patent and Trademark Office
Address: COMMISSIONER FOR PATENTS
P.O. Box 1450
Alexandria, Virginia 22313-1450
www.uspto.gov

APPLICATION NUMBER	FILING OR 371 (c) DATE	FIRST NAMED APPLICANT	ATTY. DOCKET NO./TITLE
11/420,700	05/26/2006	Alby Abram	021706-002302US

CONFIRMATION NO. 1455

OC000000023390941

20350
TOWNSEND AND TOWNSEND AND CREW, LLP
TWO EMBARCADERO CENTER
EIGHTH FLOOR
SAN FRANCISCO, CA 94111-3834

Date Mailed: 04/16/2007

NOTICE REGARDING CHANGE OF POWER OF ATTORNEY

This is in response to the Power of Attorney filed 02/15/2007.

- The Power of Attorney to you in this application has been revoked by the assignee who has intervened as provided by 37 CFR 3.71. Future correspondence will be mailed to the new address of record(37 CFR 1.33).

Kimberly Grabinet
Office of Initial Patent Examination (571) 272-4000, or 1-800-PTO-9199
FORMER ATTORNEY/AGENT COPY

UNITED STATES PATENT AND TRADEMARK OFFICE

Commissioner for Patents
United States Patent and Trademark Office
P.O. Box 1450
Alexandria, VA 22313-1450
www.uspto.gov

NOVAK DRUCE
AND QUIGG LLP (Volvo)
1000 LOUISIANA STREET
FIFTY-THIRD FLOOR
HOUSTON TX 77002

COPY MAILED
SEP 11 2008
OFFICE OF PETITIONS

In re Application of	:	
Olsson, et al.	:	
Application No. 11/420,706	:	DECISION
Filed: 26 May, 2006	:	
Attorney Docket No. 7589.335.PCUS00	:	

This is a decision on the petition, filed on 4 January, 2008, considered as a petition under seeking to revive the application under 37 C.F.R. §1.137(b) as having been abandoned due to unintentional delay.

The petition under 37 C.F.R. §1.137(b) is **GRANTED**.

As to Allegations of
Unintentional Delay

The requirements of a grantable petition pursuant to 37 C.F.R. §1.137(b) are the petition and fee therefor, a reply, a proper statement of unintentional delay under the regulation, and, where applicable, a terminal disclaimer and fee. (However, it does not appear that a terminal disclaimer and fee are due here.)

BACKGROUND

The record reflects as follows:

Petitioner failed to reply timely and properly to the Notice of Allowance/Allowability and Fees Due mailed on 26 September, 2007, with reply due under a non-extendable deadline on or before 26 December, 2007.

The instant application went abandoned by operation of law after midnight 26 December, 2007.

It does not appear that the Office mailed the Notice of Abandonment before the instant petition was filed.

On 4 January, 2008, Petitioner filed the instant petition with fee, the reply in the form of Fees Due, and made the statement of unintentional delay.

The Office mailed the Notice of Abandonment on 29 January, 2008.

Out of an abundance of caution, Petitioners always are reminded that the filing of a petition under 37 C.F.R. §1.181 does not toll any periods that may be running any action by the Office and a petition seeking relief under the regulation must be filed within two (2) months of the act complained of (see: 37 C.F.R. §1.181(f)), and that those registered to practice and all others who make representations before the Office are reminded to inquire into the underlying facts of representations made to the Office and support averments with the appropriate documentation–since all owe to the Office the continuing duty to disclose.[1]

The availability of applications and application papers online to applicants/practitioners who diligently associate their Customer Number with the respective application(s) now provides an applicant/practitioner on-demand information as to events/transactions in an application.

As to Allegations of
Unintentional Delay

The requirements under 37 C.F.R. §1.137(b) have been satisfied.

CONCLUSION

Accordingly, The petition under 37 C.F.R. §1.137(b) is **granted**.

The instant application is released to Publications Branch to be processed into a patent in due course.

Petitioner may find it beneficial to view Private PAIR within a fortnight of the instant decision to ensure that the revival has been acknowledged by the Publications Branch in response to this decision. It is noted that all inquiries with regard to that change in status need be directed to the Publications Branch where that change of status must be effected—that does not occur in the Office of Petitions.

---

[1] See supplement of 17 June, 1999. The Patent and Trademark Office is relying on Petitioner's duty of candor and good faith and accepting a statement made by Petitioner. See Changes to Patent Practice and Procedure, 62 Fed. Reg. at 53160 and 53178, 1203 Off. Gaz. Pat. Office at 88 and 103 (responses to comments 64 and 109)(applicant obligated under 37 C.F.R. §10.18 to inquire into the underlying facts and circumstances when providing statements to the Patent and Trademark Office).

While telephone inquiries regarding this decision may be directed to the undersigned at (571) 272-3214, it is noted that all practice before the Office is in writing (see: 37 C.F.R. §1.2[2]) and the proper authority for action on any matter in this regard are the statutes (35 U.S.C.), regulations (37 C.F.R.) and the commentary on policy (MPEP). Therefore, no telephone discussion may be controlling or considered authority for Petitioner's action(s).

/John J. Gillon, Jr./
John J. Gillon, Jr.
Senior Attorney
Office of Petitions

[2] The regulations at 37 C.F.R. §1.2 provide:
§1.2 Business to be transacted in writing.
All business with the Patent and Trademark Office should be transacted in writing. The personal attendance of applicants or their attorneys or agents at the Patent and Trademark Office is unnecessary. The action of the Patent and Trademark Office will be based exclusively on the written record in the Office. No attention will be paid to any alleged oral promise, stipulation, or understanding in relation to which there is disagreement or doubt.

UNITED STATES PATENT AND TRADEMARK OFFICE

UNITED STATES DEPARTMENT OF COMMERCE
United States Patent and Trademark Office
Address: COMMISSIONER FOR PATENTS
P.O. Box 1450
Alexandria, Virginia 22313-1450
www.uspto.gov

SHAY GLENN LLP
2755 CAMPUS DRIVE
SUITE 210
SAN MATEO, CA 94403

Mail Date: 04/21/2010

Applicant	: David S. Utley	: DECISION ON REQUEST FOR
Patent Number	: 7632268	: RECALCULATION of PATENT
Issue Date	: 12/15/2009	: TERM ADJUSTMENT IN VIEW
Appliction No	: 11/420,712	: OF WYETH AND NOTICE OF INTENT TO
Filed	: 05/26/2006	: ISSUE CERTIFICATE OF CORRECTION
		:

The Request for Recalculation is **GRANTED** to the extent indicated.

The patent term adjustment has been determined to be **117** days. The USPTO will *sua sponte* issue a certificate of correction reflecting the amount of PTA days determined by the recalculation.

Prior to the issuance of the certificate of correction, the USPTO will afford patentee an opportunity to be heard and request reconsideration. Accordingly, patentee has **one month or thirty (30) days**, whichever is longer, to file a request for reconsideration of this patent term adjustment calculation. See 35 U.S.C. 154(b)(3)(B)(ii) and 37 CFR 1.322(a)(4). No extensions of time will be granted under 37 CFR 1.136.

Patentee should use document code PET.OP if electronically filing a request for reconsideration of this patent term adjustment calculation. The patentee must also include the information required by 37 CFR 1.705(b)(2) and the fee required by 37 CFR 1.18(e). If patentee does not file a timely request for reconsideration of this patent term adjustment calculation including the information required by 37 CFR 1.705(b)(2) and the fee required by 37 CFR 1.18(e), the USPTO will issue a certificate of correction reflecting the PTA determination noted above.

Patentee should be aware that in order to preserve the right to review in the United States District Court for the District of Columbia of the USPTO patent term adjustment determination, patentee must ensure that he or she also take the steps required under 35 U.S.C. 154(b)(4)(A) in a timely manner. Nothing in the request for recalculation should be construed as providing an alternative time frame for commencing a civil action under 35 U.S.C. 154(b)(4)(A).

Any questions concerning this decision should be directed to the Office of Patent Legal Administration at 571-272-7702.

UNITED STATES PATENT AND TRADEMARK OFFICE

Commissioner for Patents
United States Patent and Trademark Office
P.O. Box 1450
Alexandria, VA 22313-1450
www.uspto.gov

LOWE HAUPTMAN HAM & BERNER, LLP
1700 DIAGONAL ROAD
SUITE 300
ALEXANDRIA VA 22314

COPY MAILED
SEP 09 2008

In re Application of	:	
Kim	:	
Deposited: May 26, 2006	:	ON PETITION
Application No. 11/420,724	:	
Atty. Dkt. No.: 2336-455	:	

This decision is in response to the petition "PETITION UNDER 37 C.F.R. § 1.57(a)," filed March 4, 2008.

The application was deposited May 26, 2006. On January 29, 2008, the Office of Patent Application Processing mailed a Notice of Incomplete Nonprovisional Application (Notice). The Notice indicated that the application had not been accorded a filing date because it appeared to have been submitted without a specification as required per 35 USC 112.

The Notice indicated that the filing date would be the date of receipt of all items indicated as omitted, unless otherwise indicated in the Notice. The Notice required that any assertions that the item(s) were submitted or were not necessary for a filing date, must be by way of petition (accompanied by required petition fee).

The Notice further indicated that if the application contained a priority claim under 37 CFR 1.55 or benefit claim under 37 CFR 1.78 of a prior-filed application that was present on the filing date of the application and applicants want to rely on 37 CFR 1.57(a) to add inadvertently omitted material to the above-identified application, applicants must file a petition under 37 CFR 1.57(a) accompanied by the $400.00 petition fee (37 CFR 1.17(f)) within TWO MONTHS of the date of this Notice.

Petitioners acknowledge that the required specification, including claims and abstract, was inadvertently omitted upon deposit of the instant application and petition to admit the inadvertently omitted material.

The application as deposited included an application data sheet.

The petition is accompanied by a copy of the Application Data Sheet claiming foreign priority from Korean Patent Application No. 10-2005-45102, filed May 27, 2005; a verified English translation of the prior filed foreign application, Korean Patent Application No. 10-2005-0045102, filed May 27, 2005; a statement that the entire inadvertently omitted specification, claims and abstract can be found in the specification, claims and abstract of the prior-filed foreign application; a newly executed declaration; a preliminary amendment submitting the inadvertently omitted specification, claims and abstract; a copy of Notice of Incomplete Non-provisional Application; and payment of the required petition fee.

If all or a portion of the specification or drawing(s) is inadvertently omitted from an application, but the application contains a claim under § 1.55 for priority of a prior-filed foreign application, or a claim under § 1.78 for the benefit of a prior-filed provisional, nonprovisional, or international application, that was present on the filing date of the application, and the inadvertently omitted portion of the specification or drawing(s) is completely contained in the prior-filed application, the claim under § 1.55 or § 1.78 shall also be considered an incorporation by reference of the prior-filed application as to the inadvertently omitted portion of the specification or drawing(s). *See*, 37 CFR 1.57(a).

The following conditions and requirements need to be met for an applicant to add omitted material to an application pursuant to 37 CFR 1.57(a):

(A) the application must have been filed on or after September 21, 2004;

(B) all or a portion of the specification or drawing(s) must have been inadvertently omitted from the application;

(C) a claim under 37 CFR 1.55 for priority of a prior-filed foreign application, or a claim under 37 CFR 1.78 for the benefit of a prior-filed provisional, nonprovisional, or international application, must have been present on the filing date of the application;

(D) the inadvertently omitted portion of the specification or drawing(s) must be completely contained in the prior-filed application;

(E) applicant must file an amendment to include the inadvertently omitted portion of the specification or drawing(s) within any time period set by the Office, but in no case later than the close of prosecution as defined by 37 CFR 1.114(b), or abandonment of the application, whichever occurs earlier;

(F) if the application is not otherwise entitled to a filing date, applicant must also file a petition under 37 CFR 1.57(a) accompanied by the petition fee set forth in 37 CFR 1.17(f);

(G) applicant must supply a copy of the prior-filed application, except where the prior-filed application is an application filed under 35 U.S.C. 111;

(H) applicant must supply an English language translation of any prior-filed application that is in a language other than English; and

(I) applicant must identify where the inadvertently omitted portion of the specification or drawing(s) can be found in the prior-filed application.

The instant petition and accompanying documentation have been carefully reviewed and found in compliance with the above-set forth requirements of 37 CFR 1.57(a). It is noted that the copy of the prior-filed application was submitted June 5, 2006. The preliminary amendment submitted herewith will be examined in due course. However, it appears that the application is entitled to a filing date, having prima facie met the requirements of 37 CFR 1.57(a).

In view thereof, the petition is hereby **GRANTED**.

This application is being forwarded to the Office of Patent Application Processing for further processing with a filing date of May 26, 2006.

Telephone inquiries related to this decision may be directed to Petitions Attorney Alesia M. Brown at (571) 272-3205.

Anthony Knight
Supervisor
Office of Petitions

UNITED STATES PATENT AND TRADEMARK OFFICE

Commissioner for Patents
United States Patent and Trademark Office
P.O. Box 1450
Alexandria, VA 22313-1450
www.uspto.gov

JJGJR.: 04-07

Paper No: __

ARTHUR J. PLANTAMURA
GENERAL CHEMICAL
PERFORMANCE PRODUCTS LLC.
90 EAST HALSEY ROAD
PARSIPPANY NJ 07054

COPY MAILED

APR 23 2007

OFFICE OF PETITIONS

In re Application of	:	
Mori, et al.	:	
Application No. 11/420,742	:	ON PETITION
Filed: 27 May, 2006	:	
Attorney Docket No. GC-217CIP	:	

This is a decision on the papers considered as a petition filed on 19 December, 2006, and supplemented on 29 March, 2007,under 37 C.F.R. §1.47(a).

For the reasons set forth below, the petition under 37 C.F.R. §1.47(a) is **DISMISSED**.

NOTES:

(1) Any reply must include a renewed petition (and fee) must include a petition under 37 C.F.R. §1.47 and must be submitted within two (2) months from the mail date of this decision. Extensions of time under 37 C.F.R. §1.136(a) are permitted. The reconsideration request should include a cover letter entitled "Petition under 37 C.F.R. §1.47";

(2) Thereafter, there will be no further reconsideration of this matter.

BACKGROUND

The record indicates:

- the instant application was filed on 27 May, 2006, without, *inter alia*, a fully executed oath/declaration;

- on 31 August, 2006 Office mailed a Notice of Missing Parts indicating, *inter alia*, that a fully executed oath/declaration (signed and dated) was required;

- on 19 December, 2006, Petitioner Arthur J. Plantamura (Reg. No. 17,724) filed, *inter alia*, the instant petition with an oath/declaration signed by co-inventors Hong and Craig on behalf of themselves and non-signing co-inventor Erik Mori (Mr. Mori) and Petitioner's statement, which statement and supporting copy of the correspondence evidence that only the oath/declaration and assignment, and not the entire application–description, claims, abstract and drawings–as required by statute, regulation and practice of the Office, were sent to the non-signing inventor, and Petitioner's supplemental statement of 39 March, 2007, does not overcome the requirement because an averred co-inventor cannot make a statement as to participation or intent in the absence of a copy of the application to provide the averred co-inventor with a substantive document upon which to make a determination.

Out of an abundance of caution, Petitioners always are reminded that those registered to practice *and* all others who make representations before the Office are to inquire into the underlying facts of representations made to the Office and support averments with the appropriate documentation–since all owe to the Office the continuing duty to disclose.[1]

---

[1] See supplement of 17 June, 1999. The Patent and Trademark Office is relying on petitioner's duty of candor and good faith and accepting a statement made by Petitioner. See Changes to Patent Practice and Procedure, 62 Fed. Reg. at 53160 and 53178, 1203 Off. Gaz. Pat. Office at 88 and 103 (responses to comments 64 and 109)(applicant obligated under 37 C.F.R. §10.18 to inquire into the underlying facts and circumstances when providing statements to the Patent and Trademark Office).

Specifically, the regulations at 37 C.F.R. §10.18 provide:

§ 10.18 Signature and certificate for correspondence filed in the Patent and Trademark Office.
(a) For all documents filed in the Office in patent, trademark, and other non-patent matters, except for correspondence that is required to be signed by the applicant or party, each piece of correspondence filed by a practitioner in the Patent and Trademark Office must bear a signature by such practitioner complying with the provisions of §1.4(d), §1.4(e), or § 2.193(c)(1) of this chapter.
(b) By presenting to the Office (whether by signing, filing, submitting, or later advocating) any paper, the party presenting such paper, whether a practitioner or non-practitioner, is certifying that—

(1) All statements made therein of the party's own knowledge are true, all statements made therein on information and belief are believed to be true, and all statements made therein are made with the knowledge that whoever, in any matter within the jurisdiction of the Patent and Trademark Office, knowingly and willfully falsifies, conceals, or covers up by any trick, scheme, or device a material fact, or makes any false, fictitious or fraudulent statements or representations, or makes or uses any false writing or document knowing the same to contain any false, fictitious or fraudulent statement or entry, shall be subject to the penalties set forth under 18 U.S.C. 1001, and that violations of this paragraph may jeopardize the validity of the application or document, or the validity or enforceability of any patent, trademark registration, or certificate resulting therefrom; and

(2) To the best of the party's knowledge, information and belief, formed after an inquiry reasonable under the circumstances, that —

(i) The paper is not being presented for any improper purpose, such as to harass someone or to cause unnecessary delay or needless increase in the cost of prosecution before the Office;

(ii) The claims and other legal contentions therein are warranted by existing law or by a nonfrivolous argument for the extension, modification, or reversal of existing law or the establishment of new law;

(iii) The allegations and other factual contentions have evidentiary support or, if specifically so identified, are likely to have

ANALYSIS

The regulations at 37 C.F.R. §1.47 provide in pertinent part:

> **§ 1.47 Filing when an inventor refuses to sign or cannot be reached.**
> (a) If a joint inventor refuses to join in an application for patent or cannot be found or reached after diligent effort, the application may be made by the other inventor on behalf of himself or herself and the nonsigning inventor. The oath or declaration in such an application must be accompanied by a petition including proof of the pertinent facts, the fee set forth in § 1.17(h), and the last known address of the nonsigning inventor. The nonsigning inventor may subsequently join in the application by filing an oath or declaration complying with §1.63.
> * * *

The regulations at 37 C.F.R. §1.63 provide in pertinent part:

> **§1.63 Oath or declaration.**
>
> (b) In addition to meeting the requirements of paragraph (a)of this section, the oath or declaration must also:
>
> (1)Identify the application to which it is directed;
>
> (2) State that the person making the oath or declaration has reviewed and understands the contents of the application, Including the claims, as amended by any amendment specifically referred to in the oath or declaration; and
>
> (3) State that the person making the oath or declaration

---

evidentiary support after a reasonable opportunity for further investigation or discovery; and

(iv) The denials of factual contentions are warranted on the evidence, or if specifically so identified, are reasonably based on a lack of information or belief.

(c) Violations of paragraph (b)(1) of this section by a practitioner or non-practitioner may jeopardize the validity of the application or document, or the validity or enforceability of any patent, trademark registration, or certificate resulting therefrom. Violations of any of paragraphs (b)(2)(i) through (iv) of this section are, after notice and reasonable opportunity to respond, subject to such sanctions as deemed appropriate by the Commissioner, or the Commissioner's designee, which may include, but are not limited to, any combination of—

(1) Holding certain facts to have been established;
(2) Returning papers;
(3) Precluding a party from filing a paper, or presenting or contesting an issue;
(4) Imposing a monetary sanction;
(5) Requiring a terminal disclaimer for the period of the delay; or
(6) Terminating the proceedings in the Patent and Trademark Office.

(d) Any practitioner violating the provisions of this section may also be subject to disciplinary action. See § 10.23(c)(15).

[Added 50 FR 5175, Feb. 6, 1985, effective Mar. 8, 1985; para. (a) revised, 58 FR 54494, Oct. 22, 1993, effective Nov. 22, 1993; paras. (a) & (b) revised, paras. (c) & (d) added, 62 FR 53131, Oct. 10, 1997, effective Dec. 1, 1997; para. (a) revised, 69 FR 56481, Sept. 21, 2004, effective Oct. 21, 2004]

> acknowledges the duty to disclose to the Office all information known to the person to be material to patentability as defined in § 1.56.

When one alleges a refusal of the inventor to sign the application papers, the circumstances of the presentation of the application papers and of the refusal must be specified in a statement of facts by the person who, *inter alia*, presented the inventor with the application papers and/or to whom the refusal was made.

The commentary at MPEP §409.03(d) provides:

> **409.03(d) Proof of Unavailability or Refusal**
>
> INVENTOR CANNOT BE REACHED
>
> Where inability to find or reach a nonsigning inventor "after diligent effort" is the reason for filing under 37 C.F.R. §1.47, a statement of facts should be submitted that fully describes the exact facts which are relied on to establish that a diligent effort was made.
>
> The fact that a nonsigning inventor is on vacation or out of town and is therefore temporarily unavailable to sign the declaration is not an acceptable reason for filing under 37 C.F.R. §1.47.
>
> Furthermore, the fact that an inventor is hospitalized and/or is not conscious is not an acceptable reason for filing under 37 C.F.R. §1.47. 37 C.F.R. §1.43 may be available under these circumstances. See MPEP §409.02. Such a petition under 37 C.F.R. §1.47 will be dismissed as inappropriate.
>
> The statement of facts must be signed, where at all possible, by a person having firsthand knowledge of the facts recited therein. Statements based on hearsay will not normally be accepted. Copies of documentary evidence such as internet searches, certified mail return receipts, cover letters of instructions, telegrams, that support a finding that the nonsigning inventor could not be found or reached should be made part of the statement. The steps taken to locate the whereabouts of the nonsigning inventor should be included statement of facts. It is important that the statement contain facts as opposed to conclusions.
>
> REFUSAL TO JOIN
>
> A refusal by an inventor to sign an oath or declaration when the inventor has not been presented with the application papers does not itself suggest that the inventor

is refusing to join the application unless it is clear that the inventor understands exactly what he or she is being asked to sign and refuses to accept the application papers. A copy of the application papers should be sent to the last known address of the nonsigning inventor, or, if the nonsigning inventor is represented by counsel, to the address of the nonsigning inventor's attorney. The fact that an application may contain proprietary information does not relieve the 37 C.F.R. §1.47 applicant of the responsibility to present the application papers to the inventor if the inventor is willing to receive the papers in order to sign the oath or declaration. It is noted that the inventor may obtain a complete copy of the application, unless the inventor has assigned his or her interest in the application, and the assignee has requested that the inventor not be permitted access. See MPEP §106. It is reasonable to require that the inventor be presented with the application papers before a petition under 37 C.F.R. §1.47 is granted since such a procedure ensures that the inventor is apprised of the application to which the oath or declaration is directed. In re Gray, 115 USPQ 80 (Comm'r Pat. 1956).

Where a refusal of the inventor to sign the application papers is alleged, the circumstances of the presentation of the application papers and of the refusal must be specified in a statement of facts by the person who presented the inventor with the application papers and/or to whom the refusal was made. Statements by a party not present when an oral refusal is made will not be accepted.

Proof that a bona fide attempt was made to present a copy of the application papers (specification, including claims, drawings, and oath or declaration) to the nonsigning inventor for signature, but the inventor refused to accept delivery of the papers or expressly stated that the application papers should not be sent, may be sufficient.

When there is an express oral refusal, that fact along with the time and place of the refusal must be stated in the statement of facts. When there is an express written refusal, a copy of the document evidencing that refusal must be made part of the statement of facts. The document may be redacted to remove material not related to the inventor's reasons for refusal.

When it is concluded by the 37 C.F.R. §1.47 applicant that a nonsigning inventor's conduct constitutes a refusal, all facts upon which that conclusion is based should be stated in the statement of facts in support of the petition or directly in the petition. If there is documentary evidence to support facts alleged in the petition or in any statement of facts, such evidence should be submitted. Whenever a nonsigning inventor gives a reason for refusing to sign the application oath or declaration, that reason should be stated in the petition.

Thus, not only must a copy of the entire application must be sent to the last known address of the non-signing inventor (or the estate representative) with a request that he/she sign the declaration for the patent application–and evidence of that transmittal submitted–but also a reasonable effort must be made to ascertain a current or last known address, and the petition (with fee) must state over the signature and registration number of the Petitioner the last known address and, if appropriate, evidence of the due diligence effort ascertaining same.

Alternatively, an oath or declaration for the patent application in compliance with 37 C.F.R. §§1.63 and 1.64 must be presented.

(The declaration must set forth the inventor's residence, citizenship and post office address. An oath or declaration in compliance with 37 C.F.R. §§1.63 and 1.64 signed by the Rule 1.47 applicant is required.[2])

CONCLUSION

The record as it stands is deficient as to document support for the averment of transmittal of the entire application (description, claims, abstract and drawings) to the non-signing inventor to/at current/valid (or at least reasonably last-known/ascertainable) address. The evidence of these requirements (*inter alia*, a copy of the transmittal letter) should be submitted with any renewed petition–and Petitioner should review the Background section, above, to ensure that all matters raised therein have been addressed.

Therefore, the instant petition hereby is **dismissed**.

Further correspondence with respect to this matter should be addressed as follows:[3]

By mail: Commissioner for Patents[4]
P.O. Box 1450
Alexandria, VA 22313-1450

---

[2] See: MPEP 409.03(b).

[3] On July 15, 2005, the Central Facsimile (FAX) Number will change from (703) 872-9306 to (571) 273-8300. Faxes sent to the old number will be routed to the new number until September 15, 2005. After September 15, 2005, the old number will no longer be in service and (571) 273-8300 will be the only facsimile number recognized for centralized delivery. (For further information. see: http://www.uspto.gov/web/offices/pac/dapp/opla/preognotice/cfax062005.pdf .)

[4] To determine the appropriate addresses for other subject-specific correspondence, refer to the USPTO Web site at www.uspto.gov.

By FAX: IFW Formal Filings
(571) 273-8300
ATTN.: Office of Petitions

By hand: Mail Stop: Petition
Customer Service Window
Randolph Building
401 Dulany Street
Alexandria, VA 22314

While telephone inquiries regarding this decision may be directed to the undersigned at (571) 272-3214, it is noted that all practice before the Office is in writing (see: 37 C.F.R. §1.2[10]) and the proper authority for action on any matter in this regard are the statutes (35 U.S.C.), regulations (37 C.F.R.) and the commentary on policy (MPEP). Therefore, no telephone discussion may be controlling or considered authority for Petitioner's action(s).

John J. Gillon, Jr.
Senior Attorney
Office of Petitions

[10] The regulations at 37 C.F.R. §1.2 provide:
§1.2 Business to be transacted in writing.
All business with the Patent and Trademark Office should be transacted in writing.The personal attendance of applicants or their attorneys or agents at the Patent and Trademark Office is unnecessary. The action of the Patent and Trademark Office will be based exclusively on the written record in the Office. No attention will be paid to any alleged oral promise, stipulation,or understanding in relation to which there is disagreement or doubt.

UNITED STATES PATENT AND TRADEMARK OFFICE

Commissioner for Patents
United States Patent and Trademark Office
P.O. Box 1450
Alexandria, VA 22313-1450
www.uspto.gov

MARK D. SARALINO (PAN)
RENNER OTTO BOISSELLE & SKLAR LLP
1621 EUCLID AVENUE
19TH FLOOR
CLEVELAND, OH 44115

COPY MAILED
FEB 25 2010

In re Application of :
Shinichi Kimura et al :
Application No. 11/420,833 : ON PETITION
Filed: May 30, 2006 :
Attorney Docket No. OKUDP0168US

This is a decision on the petition, filed February 23, 2010 under 37 CFR 1.313(c)(2) to withdraw the above-identified application from issue after payment of the issue fee.

The petition is **GRANTED**.

The above-identified application is withdrawn from issue for consideration of a submission under 37 CFR 1.114 (request for continued examination). See 37 CFR 1.313(c)(2).

Petitioner is advised that the issue fee paid on January 29, 2010 in the above-identified application cannot be refunded. If, however, the above-identified application is again allowed, petitioner may request that it be applied towards the issue fee required by the new Notice of Allowance.[1]

Telephone inquiries should be directed to Irvin Dingle at (571) 272-3210.

This matter is being referred to Technology Center AU 2627 for processing of the request for continued examination under 37 CFR 1.114 and for consideration of the concurrently filed Information Disclosure Statement.

/Irvin Dingle/
Irvin Dingle
Petitions Examiner
Office of Petitions

---

[1] The request to apply the issue fee to the new Notice may be satisfied by completing and returning the new Issue Fee Transmittal Form PTOL-85(b), which includes the following language thereon: Commissioner for Patents is requested to apply the Issue Fee and Publication Fee (if any) or re-apply any previously paid issue fee to the application identified above. Petitioner is advised that, whether a fee is indicated as being due or not, the Issue Fee Transmittal Form **must** be completed and timely submitted to avoid abandonment. Note the language in bold text on the first page of the Notice of Allowance and Fee(s) Due (PTOL-85).

UNITED STATES PATENT AND TRADEMARK OFFICE

Commissioner for Patents
United States Patent and Trademark Office
P.O. Box 1450
Alexandria, VA 22313-1450
www.uspto.gov

CANTOR COLBURN LLP – SABIC (NORYL)
20 CHURCH STREET
22ND FLOOR
HARTFORD, CT 06103

COPY MAILED
MAR 24 2009
OFFICE OF PETITIONS

In re Application of
Ben Patel et al
Application No. 11/420,847
Filed: May 30, 2006
Attorney Docket No. 162263-1

ON PETITION

This is a decision on the petition filed February 26, 2009 under 37 CFR 1.137(b), to revive the above-identified application.

The petition is **GRANTED.**

The above-identified application became abandoned for failure to submit the Issue fee in a timely manner in reply to the Notice of Allowance mailed September 25, 2008, which set a statutory period for reply of three (3) months. Accordingly, the above-identified application became abandoned on December 26, 2008.

The petition satisfies the conditions for revival pursuant to the provisions of 37 CFR 1.137(b) in that (1) the reply in the form of payment of the Issue fee; (2) the petition fee; (3) the required statement of unintentional delay have been received. Accordingly, the issue fee is accepted as having been unintentionally delayed.

Telephone inquiries concerning this decision should be directed to the undersigned at (571) 272-3210.

This matter is being referred to the Office of Data Management for further processing.

Irvin Dingle
Petitions Examiner
Office of Petitions

UNITED STATES PATENT AND TRADEMARK OFFICE

Commissioner for Patents
United States Patent and Trademark Office
P.O. Box 1450
Alexandria, VA 22313-1450
www.uspto.gov

BROOKS, CAMERON & HUEBSCH, PLLC
1221 NICOLLET AVENUE, SUITE 500
MINNEAPOLIS, MN 55403

COPY MAILED

AUG 27 2008

In re Application of	:	
James BRENNAN, et al	:	
Application No. 11/420,860	:	DECISION ON PETITION
Filed: May 30, 2006	:	TO WITHDRAW
Attorney Docket No. MN1-0014USC1	:	FROM RECORD
	:	

This is a decision on the Request to Withdraw as attorney or agent of record under 37 C.F.R. § 1.36(b), filed May 5, 2008.

The request is **APPROVED**.

A grantable request to withdraw as attorney/agent of record must be signed by every attorney/agent seeking to withdraw or contain a clear indication that one attorney is signing on behalf of another/others. A request to withdraw will not be approved unless at least 30 (thirty) days would remain between the date of approval and the later of the expiration date of a time to file a response or the expiration date of the maximum time period which can be extended under 37 C.F.R. § 1.136(a).

The request was signed by Edward J. Brooks, III on behalf of all the attorney/agents associated with Customer Number 38356.

All the attorneys/agents associated with Customer Number 38356 have been withdrawn.

Applicant is reminded that there is no attorney of record at this time.

The request to change the correspondence of record is not acceptable as the requested correspondence address is not that of: (1) the first named signing inventor; or (2) an intervening assignee of the entire interest under 37 C.F.R 3.71. All future communications from the Office will be directed to the first named signing inventor at the first copied address below until otherwise properly notified by the applicant.

In order to request or take action in a patent matter, the assignee must establish its ownership of the patent to the satisfaction of the Director. In this regard, a Statement under 37 CFR 3.73(b) must have either: (i) documentary evidence of a chain of title from the original owner to the assignee (*e.g.*, copy of an executed assignment), and a statement affirming that the documentary evidence of the chain of title from the original owner to the assignee was or concurrently is being submitted for recordation pursuant to § 3.11; or (ii) a statement specifying where documentary evidence of a chain of title from the original owner to the assignee is recorded in the assignment records of the Office (*e.g.*, reel and frame number).

Telephone inquiries concerning this decision should be directed to the undersigned at 571-272-6735.

Diane Goodwyn
Petitions Examiner
Office of Petitions

cc: JAMES BRENNAN
414 213TH PL SE
SAMMAMISH, WA 98074

cc: CHRISTOPHER R. AMBROSE
AMBROSE LAW GROUP LLC, BEND OFFICE
805 SW INDUSTRIAL WAY, STE 201
BEND, OR 97702

UNITED STATES PATENT AND TRADEMARK OFFICE

COMMISSIONER FOR PATENTS
UNITED STATES PATENT AND TRADEMARK OFFICE
P.O. BOX 1450
ALEXANDRIA, VA 22313-1450
www.uspto.gov

BULLIVANT HOUSER
BAILEY PC
1415 L STREET
SUITE 1000
SACRAMENTO CA 95814

COPY MAILED

DEC 22 2009

OFFICE OF PETITIONS

In re Application of :
Brennan, et al. :
Application No. 11/420,860 : DECISION
Filed: 5 October, 2006 :
Attorney Docket No. 20053-7002 :

This is a decision on the petition filed on 2 November, 2009, pursuant to 37 C.F.R. §1.137(b) for revival of an application abandoned due to unintentional delay .

The petition pursuant to 37 C.F.R. §1.137(b) is **GRANTED**.

As to the Allegations
of Unintentional Delay

The requirements of a grantable petition pursuant to 37 C.F.R. §1.137(b) are the petition and fee therefor, a reply, a proper statement of unintentional delay under the regulation, and, where applicable, a terminal disclaimer and fee.

Petitioners' attentions always are directed to the guidance in the Commentary at MPEP §711.03(c)(II).

BACKGROUND

The record reflects as follows:

Petitioner failed to reply timely and properly to the non-final Office action mailed on 24 April, 2008, with reply due absent an extension of time on or before 24 July, 2008.

The application went abandoned by operation of law after midnight 24 July, 2008.

The Office mailed the Notice of Abandonment on 11 December, 2008—the Notice of Abandonment erroneously states the date of the Office action as 28 April, 2008.

Petitioner filed a revocation/power of attorney on 22 May, 2009, with certification/statement pursuant to 37 C.F.R. §3.73(b).

On 2 November, 2009, Petitioner filed, *inter alia*, a petition (with fee) pursuant to 37 C.F.R. §1.137(b), a reply in the form of an amendment, and made the statement of unintentional delay.

Petitioner also filed a request and fee for extension of time—which Petitioner as one registered to practice before the Office knows is not appropriate after the expiration of the statutory period. The fee is being refunded. Should Petitioner later find that the fee for extension of time was not refunded, Petitioner should request a refund from the Office of Finance and provide therewith a copy of this decision.

The record (including the petition filed on 2 November, 2009) does not necessitate a finding that the delay between midnight 24 July, 2008 (the date of abandonment), and 2 November, 2009 (the date of the filing of grantable petition), was not unintentional.

Rather, the Patent and Trademark Office is relying in this matter on the duty of candor and good faith of Petitioner/Counsel Carl J. Schwedler (Reg. No. 36,924) when accepting Petitioners' representation that the delay in filing the response was unintentional.[1]

> *Further, it is not apparent whether the person signing the statement of unintentional delay was in a position to have firsthand or direct knowledge of the facts and circumstances of the delay at issue.*
>
> *Nevertheless, such statement is being treated as having been made as the result of a reasonable inquiry into the facts and circumstances of such delay.[2] In the event that such an inquiry has not been made, Petitioner **must** make such an inquiry.*
>
> *If such inquiry results in the discovery that it is not correct that the entire delay in filing the required reply from the due date for the reply until the filing of a grantable petition pursuant to 37 C.F.R. §1.137(b) was unintentional, Petitioner **must** notify the Office.*

The availability of applications and application papers online to applicants/practitioners who diligently associate their Customer Number with the respective application(s) now provides an applicant/practitioner on-demand information as to events/transactions in an application.

---

[1] See Changes to Patent Practice and Procedure, 62 Fed. Reg. at 53160 and 53178, 1203 Off. Gaz. Pat. Office at 88 and 103 (responses to comments 64 and 109)(applicant obligated under 37 C.F.R. §10.18 to inquire into the underlying facts and circumstances when providing the statement required by 37 C.F.R. §1.137(b) to the Patent and Trademark Office).

[2] See 37 C.F.R. §10.18(b) and Changes to Patent Practice and Procedure; Final Rule Notice, 62 Fed. Reg. 53131, 53178 (October 10, 1997), 1203 Off. Gaz. Pat. Office 63, 103 (October 21, 1997).

Out of an abundance of caution, Petitioners always are reminded that those registered to practice and all others who make representations before the Office **must** inquire into the underlying facts of representations made to the Office and support averments with the appropriate documentation–since all owe to the Office the continuing duty to disclose.[3]

STATUTES, REGULATIONS AND ANALYSIS

Congress has authorized the Commissioner to "revive an application if the delay is shown to the satisfaction of the Commissioner to have been "unavoidable." 35 U.S.C. §133 (1994).[4]
The regulations at 37 C.F.R. §1.137(a) and (b) set forth the requirements for a Petitioner to revive a previously unavoidably or unintentionally, respectively, abandoned application under this congressional grant of authority.

Unintentional delays are those that do not satisfy the very strict statutory and regulatory requirements of unavoidable delay, and also, by definition, are not intentional.[5]))

As to Allegations of Unintentional Delay

The requirements of a grantable petition pursuant to 37 C.F.R. §1.137(b) are the petition and fee therefor, a reply, a proper statement of unintentional delay under the regulation, and, where applicable, a terminal disclaimer and fee.

It appears that the requirements under the rule have been satisfied.

CONCLUSION

Accordingly, the petition pursuant to 37 C.F.R. §1.137(b) is **granted**.

The instant application is released to the Office of Technology Center/AU 2617 for further processing in due course.

---

[3] See supplement of 17 June, 1999. The Patent and Trademark Office is relying on petitioner's duty of candor and good faith and accepting a statement made by Petitioner. See Changes to Patent Practice and Procedure, 62 Fed. Reg. at 53160 and 53178, 1203 Off. Gaz. Pat. Office at 88 and 103 (responses to comments 64 and 109)(applicant obligated under 37 C.F.R. §10.18 to inquire into the underlying facts and circumstances when providing statements to the Patent and Trademark Office).

[4] 35 U.S.C. §133 provides:

35 U.S.C. §133 Time for prosecuting application.

Upon failure of the applicant to prosecute the application within six months after any action therein, of which notice has been given or mailed to the applicant, or within such shorter time, not less than thirty days, as fixed by the Commissioner in such action, the application shall be regarded as abandoned by the parties thereto, unless it be shown to the satisfaction of the Commissioner that such delay was unavoidable.

[5] Therefore, by example, an unintentional delay in the reply might occur if the reply and transmittal form are to be prepared for shipment by the US Postal Service, but other pressing matters distract one's attention and the mail is not timely deposited for shipment.

Petitioner may find it beneficial to view Private PAIR within a fortnight of the instant decision to ensure that the revival has been acknowledged by the TC/AU in response to this decision. It is noted that all inquiries with regard to that change in status need be directed to the TC/AU where that change of status must be effected—that does not occur in the Office of Petitions.

Telephone inquiries regarding this decision may be directed to the undersigned at (571) 272-3214—it is noted, however, that all practice before the Office is in writing (see: 37 C.F.R. §1.2[6]) and the proper authority for action on any matter in this regard are the statutes (35 U.S.C.), regulations (37 C.F.R.) and the commentary on policy (MPEP). Therefore, no telephone discussion may be controlling or considered authority for Petitioner's action(s).

/John J. Gillon, Jr./
John J. Gillon, Jr.
Senior Attorney
Office of Petitions

[6] The regulations at 37 C.F.R. §1.2 provide:
§1.2 Business to be transacted in writing.
All business with the Patent and Trademark Office should be transacted in writing. The personal attendance of applicants or their attorneys or agents at the Patent and Trademark Office is unnecessary. The action of the Patent and Trademark Office will be based exclusively on the written record in the Office. No attention will be paid to any alleged oral promise, stipulation, or understanding in relation to which there is disagreement or doubt.

UNITED STATES PATENT AND TRADEMARK OFFICE

8-28-08

Commissioner for Patents
United States Patent and Trademark Office
P.O. Box 1450
Alexandria, VA 22313-1450
www.uspto.gov

Patent No. :7,343,828
Ser. No. : 11/420,870
Inventor(s) : Paul C. Bagley, et. al.
Issued : March 18, 2008
Title : TAPE FED MINIATURE ARI GAP INSPECTION CRAWLER
Docket No. : 19441-0143

Re: Request for Certificate of Correction

Consideration has been given your request for the issuance of a certificate of correction for the above-identified patent under the provisions of Rule(s) 1.322 or 1.323.

Assignees' names and addresses (assignment data) printed in a patent, are based *solely* on information supplied in the appropriate space for identifying the assignment data, i.e., item 3 of the Issue Fee Transmittal Form PTOL-85B. Granting of a request under 37 CFR 3.81(b) is required to correct applicant's error providing ***incorrect or erroneous*** assignment data, *before* issuance of a Certificate of Correction, under 37 CFR 1.323 *(see Manual of Patent Examining Procedures (M.P.E.P) Chp.1400, sect. 1481).* This procedure is required *at any time after the issue fee is paid*, including after issuance of the patent.

In view of the foregoing, your request is hereby denied.

A request to correct the Assignee under 37 CFR 3.81(b) should include:

A. **the processing fee set forth in 37 CFR 1.117(h) (currently $130);**
B. a statement that the failure to include the correct assignee name on the PTOL-85B was inadvertent; and
C. a copy of the Notice of Recordation of Assignment Document, reflecting the reel and frame number where the assignment(s) is recorded and/or reflecting proof of *the date* the assignment was submitted for recordation.

In the Request, Applicant(s) may request that the file be forwarded to Certificates of Correction Branch, for issuance of a Certificate of Correction, if the Request is granted.

Any request under 37 CFR 3.81(b) should be directed to the following address or facsimile number:

By mail: Mail Stop PETITIONS
Commissioner for Patents
Post Office Box 1450
Alexandria, VA 22313-1450

By hand: Customer Service Window
Mail Stop Petitions
Randolph Building
401 Dulany Street
Alexandria, VA 22314

By fax: (703) 872-9306
ATTN: Office of Petitions

If a fee (currently $100) was previously submitted for consideration of a Request for Certificate of Correction, under CFR 1.323, to correct assignment data, , no additional fee is required.

Eva James
For Cecelia Newman
Decisions & Certificates
of Correction Branch
(703) **308-9390 ext. 124** or 105

Daniel J. Warren
Sutherland Asbill & Brennan, LLP
999 Peachtree St., NE
Atlanta, GA 30309

ej

UNITED STATES PATENT AND TRADEMARK OFFICE

Commissioner for Patents
United States Patent and Trademark Office
P.O. Box 1450
Alexandria, VA 22313-1450
www.uspto.gov

SUTHERLAND ASBILL & BRENNAN LLP
999 PEACHTREE STREET, N.E.
ATLANTA GA 30309

COPY MAILED

SEP 2 6 2008

OFFICE OF PETITIONS

In re Application of	:	
Bagley et al.	:	
Application No. 11/420,870	:	DECISION ON PETITION
Filed: May 30, 2006	:	
Patent No.7,343,828	:	
Issued: March 18, 2008	:	
Attorney Docket No. 19441-0143	:	

This is a decision on the request under 37 CFR 3.81(b)[1] filed first on March 25, 2008 and again on September 10, 2008 to correct the name of the assignee on the front page of the above-identified patent by way of a Certificate of Correction.

The request is **GRANTED**.

Petitioner indicates that the correct assignee is General Electric Company, and that The Coca-Cola Company was incorrectly placed on the Fee(s) Transmittal form PTOL-85(b) at the time of payment of the issue fee. Accordingly, petitioner requests that a certificate of correction be issued to reflect the correct assignee on the front page of the Letters Patent in the patent to be issued from the application.

37 CFR 3.81(b), effective June 25, 2004, reads:

> *After payment of the issue fee:* Any request for issuance of an application in the name of the assignee submitted after the date of payment of the issue fee, and any request for a patent to be corrected to state the name of the assignee, must state that the assignment was submitted for recordation as set forth in § 3.11 before issuance of the patent, and must include a request for a certificate of correction under § 1.323 of this chapter (accompanied by the fee set forth in § 1.20(a) and the processing fee set forth in § 1.17(i) of this chapter.

---

[1] *See* MPEP 1309, subsection II; and Official Gazette of June 22, 2004.

The request was accompanied by a certificate of correction (and fee) as required by 3.81(b). Further, Office assignment records reflect that General Electric Company is the assignee of record, which assignment was submitted for recordation as set forth in § 3.11 before issuance of the patent. Accordingly, as the request complies with the provisions of 37 CFR 3.81(b), it would be appropriate for a certificate of correction to be processed after issuance of this application into a patent.

Also, the processing fee set forth in § 1.17(i) ($130.00) has been charged to Deposit Account No. 19-5029 as authorized in the petition.

Telephone inquiries concerning this decision should be directed to Christopher Bottorff at (571) 272-6692. Inquiries regarding the issuance of a certificate of correction should be directed to the Certificate of Correction Branch at (571) 272-4200.

The Certificates of Correction Branch will be notified of this decision granting the petition under 37 CFR 3.81(b) and directing issuance of the requested Certificate of Correction.

Christopher Bottorff
Petitions Examiner
Office of Petitions

SPE RESPONSE FOR CERTIFICATE OF CORRECTION

Paper No.:20090824

DATE : August 24, 2009

TO SPE OF : ART UNIT 2826

SUBJECT : Request for Certificate of Correction on Patent No.: 7,528,474

A response is requested with respect to the accompanying request for a certificate of correction.

Please complete this form and return with file, within **7** days to:
Certificates of Correction Branch - ST (South Tower) 9A22
Palm location **7590** - Tel. No. (703) 305-8309

With respect to the change(s) requested, correcting Office and/or Applicant's errors, should the patent read as shown in the certificate of correction? No new matter should be introduced, nor should the scope or meaning of the claims be changed.

Thank You For Your Assistance **Certificates of Correction Branch**

The request for issuing the above-identified correction(s) is hereby:

Note your decision on the appropriated box.

☒ **Approved** All changes apply.

☐ **Approved in Part** Specify below which changes **do not** apply.

☐ **Denied** State the reasons for denial below.

Comments:

/SUE PURVIS/
Supervisory Patent Examiner.Art Unit 2826

UNITED STATES PATENT AND TRADEMARK OFFICE

Commissioner for Patents
United States Patent and Trademark Office
P.O. Box 1450
Alexandria, VA 22313-1450
www.uspto.gov

HAHN LOESER & PARKS, LLP
One GOJO Plaza
Suite 300
AKRON OH 44311-1076

In re Application of: WELLS, JASON S. ET AL. Serial No.: 11/420,874 Filed: May, 30, 2006 Docket: 115646.00049 Title: ROTARY CUTTING TOOL	DECISION ON REQUEST FOR PETITION TO MAKE SPECIAL FOR NEW APPLICATION UNDER 37 C.F.R. § 1.102 & M.P.E.P. § 708.02 (VIII)

This is a decision on the petition filed on Aug. 7, 2006 to make the above-identified application special under the accelerated examination procedure set forth in MPEP § 708.02(VIII) and in accordance with 37 C.F.R. § 1.102(d).

The petition to make the application special is **DISMISSED**.

In support of the petition, petitioner provides: a) the applicable fee; b) a statement that all claims are directed towards a single invention, or if the Office determines that all presented claims are not obviously directed to a single invention, applicant will make an election without traverse; c) a statement that a pre-examination search was made on the USPTO database in Class 407, subclasses 29.13, 34, 35, 42, 53, 54, 55, 59, 63, 102.1, 477.2; d) a copy of each reference; and e) a detailed discussion of the references.

For accelerated examination under MPEP § 708.02(VIII) in accordance with 37 C.F.R. § 1.102(d), a showing of the following is required: a) the applicable petition fee; b) all claims are directed to a single invention, or if the Office determines that all the claims presented are not obviously directed to a single invention, applicant will make an election without traverse; c) a statement that a pre-examination search was made, listing the field of search by class and subclass; d) a copy of each of the references deemed most closely related to the claimed subject matter; and e) a detailed discussion of the references pointing out with the particularity required by 37 CFR 1.111 (b) and (c), how the claimed subject matter is distinguishable over the references.

The requirements of MPEP § 708.02(VIII)(a), (b), (c) and (d) are considered to have been met. However, the petition does not meet the requirements of MPEP § 708.02(VIII)(e).

Regarding the requirement of MPEP § 708.02(VIII)(e), 37 CFR § 1.111 (b) states "[a] general allegation that the claims define a patentable invention without specifically pointing out how the language of the claims patentably distinguishes them from the references does not comply with the requirements of this section." 37 CFR § 1.111 (c) states in part "the applicant or patent owner must clearly point out the patentable novelty which he or she thinks the claims present in view of the state of the art disclosed by the references cited or the objections made." Applicant fails to provide a detailed discussion of each reference cited and point out the particular language that distinguishes independent claims 1 and 19 from all cited references. Applicant's repeated general allegation that the applicant's claims are distinguishable over the various cited U. S. patent references 1-9, U.S. Patent application references 1-3, Japanese patent publication and Non-patent literature documents as listed on the IDS runs contrary to 37 CFR § 1.111 (b), which does not allow for general allegations. Rather, each independent claim should be compared with each reference, and the differences between the two must be clearly stated. For *each* reference, the applicant must point out the specific differences between the reference and the language of independent claims 1 and 19. Because the petition does not point out the specific language in the independent claims that distinguishes over each reference, it fails to meet the requirements of MPEP § 708.02(VIII)(e).

While Technology Center Directors may have granted petitions that do not comply with the detailed discussion requirement of the Accelerated Examination procedure, Technology Center Director decisions on petitions are not binding precedent of the Patent Examining Corps, and the application of an improper standard in certain cases does not require the Office to continue to apply the improper standard in all cases. *See In re The Boulevard Entertainment, Inc.*, 334 F.3d 1336, 1343, 67 USPQ2d 1475, 1480 (Fed. Cir. 2003).

For the above-mentioned reasons, the petition is dismissed. The application will, therefore, be taken up by the examiner for action in its regular turn.

Any request for reconsideration of this decision must be submitted within 2 (two) months of the date of this decision in order to be considered timely. Any request for reconsideration must provide a detailed discussion of each reference that clearly points out the specific language in the independent claim that distinguishes over the reference. Any inquiry regarding this decision should be directed to Henry Yuen, Special Program Examiner, at (571) 272-4856.

Petition DISMISSED.

for Karen M. Young

Frederick R. Schmidt, Director
Technology Center 3700

UNITED STATES PATENT AND TRADEMARK OFFICE

Commissioner for Patents
United States Patent and Trademark Office
P.O. Box 1450
Alexandria, VA 22313-1450
www.uspto.gov

SUGHRUE MION, PLLC
2100 PENNSYLVANIA AVENUE, N.W.
SUITE 800
WASHINGTON DC 20037

COPY MAILED

OCT 25 2007

OFFICE OF PETITIONS

In re Application of	:	ON PETITION
Giancarlo Casellato	:	
Application No. 11/420886	:	
Filing or 371(c) Date: 05/30/2006	:	
Attorney Docket Number:	:	
Q95101	:	

This is a decision on the "Petition Under 37 C.F.R. § 1.53 to be Accorded Filing Date," filed June 29, 2007.

Background

Application papers in the above-identified application were filed on May 30, 2006. On September 5, 2006, the Office of Initial Patent Examination mailed a Notice to File Missing Parts of Nonprovisional Application, noting May 30, 2006, as the filing date, but requiring an oath or declaration, and noting that Figure 3 described in the specification appeared to have been omitted from the application.

The mailing of a 'Notice of Omitted Item(s)' will permit the applicant to either: (1) promptly establish prior receipt in the USPTO of the drawing(s) at issue (generally by way of date-stamped postcard receipt (MPEP 503)) (by filing a petition under 37 CFR 1.53); (2) promptly submit the omitted drawing(s) in a nonprovisional application and accept the date such submission as the application filing date (by filing a petition under 37 CFR 1.182); or (3) "accept the application as deposited in the USPTO, and file an Amendment of the specification correcting the reference to omitted pages of the specification or omitted drawings, or an Amendment under 37 CFR 1.57(a) if the application contains a priority claim that was present on filing and applicant wants to rely on 37 CFR 1.57(a) to add the inadvertently omitted material. See MPEP 601.01(g).

On November 6, 2006, Petitioner responded to the Notice submitting, *inter alia*, a declaration and replacement drawings. Petitioner requested that the Examiner acknowledge receipt of the

drawings, and stated that the drawings were intended to replace the drawings previously submitted.

On May 14, 2007, this Office mailed an Updated Filing Receipt wherein the filing date of the application was changed to November 6, 2006, the date the replacement drawings were filed.

The present petition

Petitioner files the present Petition to correct the filing date of the application to May 30, 2006. Applicant avers that the submission of the drawing Figures as replacement drawings, rather than as an amendment under 37 CFR 1.57(a) was inadvertent. Applicant has included with the present petition an Amendment Under 37 CFR 1.57(a) to add Fig. 3.

Analysis and conclusion

A review of the file reveals that the application as filed on May 30, 2006, was a complete application under 37 CFR 1.53(b) such that the application was correctly accorded the May 30, 2006 filing date. As provided in the Notice, Applicant may add the omitted figure(s) by way of amendment and without a petition.

Receipt of the Amendment Under 37 CFR 1.57(a) is hereby acknowledged. The issue of new matter is appropriately addressed by the Examiner. See MPEP 608.02.

Accordingly, the petition is **GRANTED.**

The application is being forwarded to the Office of Initial Patent Examination for correction of the filing date to May 30, 2006, using the drawings filed on that date, and for the mailing of a Corrected Filing Receipt. Thereafter, the application will be referred back to Technology Center Art Unit 2836 for examination in due course.

Telephone inquiries concerning this matter should be directed to the undersigned at (571) 272-3232.

Derek L. Woods
Attorney
Office of Petitions

UNITED STATES PATENT AND TRADEMARK OFFICE

Commissioner for Patents
United States Patent and Trademark Office
P.O. Box 1450
Alexandria, VA 22313-1450
www.uspto.gov

APPLICATION NUMBER	FILING/RECEIPT DATE	FIRST NAMED APPLICANT	ATTORNEY DOCKET NUMBER
11/420892	05/30/06	Abbs	006591.00027

22908
Banner & Witcoff, LTD
Ten South Wacker Drive
Suite 3000
Chicago, IL 60606

DATE MAILED: October 17, 2007

DECISION GRANTING PETITION UNDER 37 CFR 1.138
The declaration of express abandonment is recognized

This is in response to the petition under 37 CFR 1.138(d) filed on May 30, 2006, requesting for a refund any previously paid search fee and excess claims fee in the above-identified application, and the petition under 37 CFR 1.138(c) filed on April 16, 2007, for express abandonment to avoid publication of the above-identified application.

The petitions are granted.

The express abandonment is recognized. Any previously paid search fee and excess claims fee are hereby refunded. The application has been withdrawn from publication. A notice of abandonment will be mailed in due course.

Any inquiries concerning this decision should be directed to the Pre-Grant Publication Division at (703) 605-4283.

Rick Clemons

Pre-Grant Publication Division

571-272-4200

UNITED STATES PATENT AND TRADEMARK OFFICE

Commissioner for Patents
United States Patent and Trademark Office
P.O. Box 1450
Alexandria, VA 22313-1450
www.uspto.gov

MAILED

SEP 30 2009

OFFICE OF PETITIONS

PHILIP S. JONNSON
JOHNSON & JOHNSON
ONE JOHNSON & JOHNSON PLAZA
NEW BRUNSWICK NJ 08933-7003

In re Application of	:	
Alireza Rezania et al	:	
Application No. 11/420,895	:	DECISION ON PETITION
Filed: May 30, 2006	:	
Attorney Docket No. LFS5079USNP	:	

This is a decision on the petition under the unintentional provisions of 37 CFR 1.137(b), filed July 28, 2009, to revive the above-identified application.

The petition is **GRANTED**.

The petition satisfies the conditions for revival pursuant to the provisions of 37 CFR 1.137(b) in that (1) the reply in the form of an amendment/election; (2) the petition fee; and (3) the required statement of unintentional delay have been received. Accordingly, the reply to the restriction requirement mailed April 30, 2008, is accepted as having been unintentionally delayed.

Petitioner should be aware that when filing of the above petition, "any utility or plant applications filed before **June 8, 1995**, must be accompanied by a terminal disclaimer and fee as set forth in § 1.321." The above application was filed on May 30, 2006.

An extension of time under 37 CFR 1.136 must be filed prior to the expiration of the maximum extendable period for reply. *See* In re Application of S., 8 USPQ2d 1630, 1631 (Comm'r Pats. 1988). Since the $2,350.00 extension of time fee submitted with the petition on July 28, 2009 was subsequent to the maximum extendable period for reply, this fee is unnecessary. Petitioner may request a refund of the fee by writing to the Office of Finance Refund Section. A copy of this decision should accompany the request.

Telephone inquiries concerning this decision should be directed to the undersigned at (571) 272-3208.

This application is being referred to Technology Center AU 1651 for appropriate action by the Examiner in the normal course of business on the reply received July 28, 2009.

/KOC/
Karen Creasy
Petitions Examiner
Office of Petitions

UNITED STATES PATENT AND TRADEMARK OFFICE

UNITED STATES DEPARTMENT OF COMMERCE
United States Patent and Trademark Office
Address: COMMISSIONER FOR PATENTS
P.O. Box 1450
Alexandria, Virginia 22313-1450
www.uspto.gov

TEXAS INSTRUMENTS INCORPORATED
P O BOX 655474, M/S 3999
DALLAS, TX 75265

Mail Date: 04/20/2010

Applicant	: Manisha AGARWALA	: DECISION ON REQUEST FOR
Patent Number	: 7596725	: RECALCULATION of PATENT
Issue Date	: 09/29/2009	: TERM ADJUSTMENT IN VIEW
Appliction No	: 11/420,914	: OF WYETH AND NOTICE OF INTENT TO
Filed	: 05/30/2006	: ISSUE CERTIFICATE OF CORRECTION
		:

The Request for Recalculation is **GRANTED** to the extent indicated.

The patent term adjustment has been determined to be **427** days. The USPTO will *sua sponte* issue a certificate of correction reflecting the amount of PTA days determined by the recalculation.

Prior to the issuance of the certificate of correction, the USPTO will afford patentee an opportunity to be heard and request reconsideration. Accordingly, patentee has **one month or thirty (30) days**, whichever is longer, to file a request for reconsideration of this patent term adjustment calculation. See 35 U.S.C. 154(b)(3)(B)(ii) and 37 CFR 1.322(a)(4). No extensions of time will be granted under 37 CFR 1.136.

Patentee should use document code PET.OP if electronically filing a request for reconsideration of this patent term adjustment calculation. The patentee must also include the information required by 37 CFR 1.705(b)(2) and the fee required by 37 CFR 1.18(e). If patentee does not file a timely request for reconsideration of this patent term adjustment calculation including the information required by 37 CFR 1.705(b)(2) and the fee required by 37 CFR 1.18(e), the USPTO will issue a certificate of correction reflecting the PTA determination noted above.

Patentee should be aware that in order to preserve the right to review in the United States District Court for the District of Columbia of the USPTO patent term adjustment determination, patentee must ensure that he or she also take the steps required under 35 U.S.C. 154(b)(4)(A) in a timely manner. Nothing in the request for recalculation should be construed as providing an alternative time frame for commencing a civil action under 35 U.S.C. 154(b)(4)(A).

Any questions concerning this decision should be directed to the Office of Patent Legal Administration at 571-272-7702.

UNITED STATES PATENT AND TRADEMARK OFFICE

Commissioner for Patents
United States Patent and Trademark Office
P.O. Box 1450
Alexandria, VA 22313-1450
www.uspto.gov

GORDON & JACOBSON, P.C.
60 LONG RIDGE ROAD
SUITE 407
STAMFORD CT 06902

DEC 18 2006

In re Application of: RAVIKUMAR	:
Appl. No.: 11/420,927	: DECISION ON PETITION to
Filed: May 30, 2006	: make SPECIAL under 37 CFR
For: MINIMALLY INVASIVE SURGICAL	: 1.102
ASSEMBLY AND METHODS	:

This is a decision on the petition filed on August 24, 2006 to make the above-identified application special under the accelerated examination procedure set forth in MPEP § 708.02(VIII) and in accordance with 37 C.F.R. § 1.102(d).

The petition to make the application special is DISMISSED.

In support of the petition, petitioner provides: a) the applicable fee; b) a statement that all claims are drawn to a single invention; c) a statement that a pre-examination search has been made in class 606 subclasses 167, 170, 181, 185, 205, 206, 210; class 128 subclass DIG 26; class 604 subclass 164.04164.11 and 174; d) a PTO-1449 IDS listing references considered pertinent; and e) a detailed discussion of each of the references including how the claimed subject matter is distinguishable over the references.

For accelerated examination under MPEP § 708.02(VIII) in accordance with 37 C.F.R. § 1.102(d), a showing of the following is required: a) the applicable petition fee; b) all claims are directed to a single invention, or if the Office determines that all the claims presented are not obviously directed to a single invention, applicant will make an election without traverse; c) a statement that a pre-examination search was made, listing the field of search by class and subclass; d) a copy of each of the references deemed most closely related to the claimed subject matter; and e) a detailed discussion of the references pointing out with the particularity required by 37 CFR 1.111 (b) and (c), how the claimed subject matter is distinguishable over the references.

The requirements of MPEP § 708.02(VIII)(a) and (c) - (e) are considered to have been met.

However, the petition does not meet the requirements of MPEP § 708.02(VIII)(b).

MPEP § 708.02(VIII)(b) requires petitioner to state that all claims are directed to a single invention, or if the Office determines that all the claims presented are not obviously directed to a

single invention, applicant will make an election without traverse. Petitioner does not state that all claims are directed to a single invention, *or that applicant will make an election without traverse should the Office make a restriction requirement.* Petitioner merely states "the claims in the application are drawn to a 'single invention' within the meaning of 35 USC 121". It is not clear what petitioner "agrees to" because during prosecution the Office, not the applicant, makes a restriction requirement when appropriate. Further, even if the applicant considers all the claims to be directed to a single invention, the rule requires a statement that he or she will make an election without traverse should the Office make a restriction requirement. Because the petition does not contain this statement, it fails to meet the requirements of MPEP § 708.02(VIII)(b).

While Technology Center Directors may have granted petitions that do not comply with the detailed discussion requirement of the Accelerated Examination procedure, Technology Center Director decisions on petitions are not binding precedent of the Patent Examining Corps, and the application of an improper standard in certain cases does not require the Office to continue to apply the improper standard in all cases. *See In re The Boulevard Entertainment, Inc.*, 334 F.3d 1336, 1343, 67 USPQ2d 1475, 1480 (Fed. Cir. 2003)).

Any request for reconsideration of this decision must be submitted within 2 (two) months of the date of this decision in order to be considered timely. Any request for reconsideration must provide: i) a statement that all claims are directed to a single invention, or if the Office determines that all the claims presented are not obviously directed to a single invention, applicant will make an election without traverse.

Any inquiry regarding this decision should be directed to J. Harrison, Special Program Examiner, at (571) 272-4449.

Petition DISMISSED

J. Harrison, Special Program Examiner
Technology Center 3700 – Mechanical Engineering,
Manufacturing and Products

UNITED STATES PATENT AND TRADEMARK OFFICE

Commissioner for Patents
United States Patent and Trademark Office
P.O. Box 1450
Alexandria, VA 22313-1450
www.uspto.gov

GORDON & JACOBSON, P.C.
60 LONG RIDGE ROAD
SUITE 407
STAMFORD CT 06902

MAY 14 2007

In re Application of: RAVIKUMAR	:
Appl. No.: 11/420,927	: DECISION ON PETITION to
Filed: May 30, 2006	: make SPECIAL under 37 CFR
For: MINIMALLY INVASIVE SURGICAL	: 1.102
ASSEMBLY AND METHODS	:

This is a decision on the December 20, 2006 request for reconsideration of the petition filed on August 24 2006 to make the above-identified application special under the accelerated examination procedure set forth in MPEP § 708.02(VIII) and in accordance with 37 C.F.R. § 1.102(d).

The petition to make the application special is Granted.

The petition has been reviewed and is found to be in compliance with the requirements for special status as set forth in Section 708.02 (VIII) of the Manual of Patent Examining Procedures (MPEP).

Applicant is advised that the examiner's search will be restricted to the subject matter encompassed by the claims. In the event that the application receives a first action rejection, Applicant is encouraged to arrange for an interview with the examiner, and to provide the examiner with a working copy of any proposed amendment one working day prior to the interview. Any amendment filed in response to a first action rejection that would require broadening the field of search will be treated as an improper response. See MPEP 708.02 (VIII) for a full explanation of the handling of applications after petition grant.

Any inquiry regarding this decision should be directed to J. Harrison at 571-272-4449.

Petition GRANTED

J. Harrison, Special Program Examiner
Technology Center 3700 – Mechanical Engineering,
Manufacturing and Products

UNITED STATES PATENT AND TRADEMARK OFFICE

Commissioner for Patents
United States Patent and Trademark Office
P.O. Box 1450
Alexandria, VA 22313-1450
www.uspto.gov

GORDON & JACOBSON
SUITE 407
60 LONG RIDGE ROAD
STAMFORD, CT 06902

COPY MAILED

AUG 1 4 2009

OFFICE OF PETITIONS

In re Application of Sundaram Ravikumar Application No. 11/420,927 Filed: May 30, 2006 Attorney Docket No. RAV-024	DECISION ON PETITION TO WITHDRAW FROM RECORD

This is a decision on the Request to Withdraw as attorney or agent of record under 37 C.F.R. § 1.36(b), filed June 25, 2009.

The request is **APPROVED**.

The request was signed by David P. Gordon on behalf of the practitioners of record associated with Customer Number 36822.

Applicant is reminded that there is no attorney of record at this time.

All future correspondence will be directed to inventor Sundaram Ravikumar at the address indicated below.

Telephone inquiries concerning this decision should be directed to Irvin Dingle at (571) 272-3210.

Irvin Dingle
Petitions Examiner
Office of Petitions

cc: Sundaram Ravikumar
265 Hardscrabble Road
Briarcliff Manor, NY 10510

SPE RESPONSE FOR CERTIFICATE OF CORRECTION

Paper No.: 120909

DATE : 12/09/2009

TO SPE OF : ART UNIT 2824

SUBJECT : Request for Certificate of Correction for Appl. No 11/420,933.: 7,606,064

Please respond to this request for a certificate of correction within 7 days.

FOR IFW FILES:

Please review the requested changes/corrections as shown in the **COCIN** document(s) in the IFW application image. No new matter should be introduced, nor should the scope or meaning of the claims be changed.

Please complete the response (see below) and forward the completed response to scanning using document code **COCX**.

FOR PAPER FILES:

Please review the requested changes/corrections as shown in the attached certificate of correction. Please complete this form (see below) and forward it with the file to:

Certificates of Correction Branch (CofC)

Should the change(s) Be made?

RoChaun Johnson
Certificates of Correction Branch
571 272-0470

Thank You For Your Assistance

The request for issuing the above-identified correction(s) is hereby:
Note your decision on the appropriate box.

- ☐ **Approved** — **All** changes apply.
- ☐ **Approved in Part** — Specify below which changes **do not** apply.
- X **Denied** — State the reasons for denial below.

Comments: Although it is acknowledged that the Foreign Priority was claimed in the Declaration filed 5/30/2006, this is an improper claim to Foreign Priority, since the time between US Application No. 10/929511 filed 8/30/2004 is more than 12 months to the present application filed 5/30/2006.

RICHARD T. ELMS
SUPERVISORY PATENT EXAMINER
TECHNOLOGY CENTER 2800

SPE

AU 2824
12/9/09
Art Unit

PAGE 2/2 * RCVD AT 12/9/2009 2:35:59 PM [Eastern Standard Time] * SVR:USPTO-EFXRF-5/30 * DNIS:2709754 * CSID:7033050725 * DURATION (mm-ss):01-04

UNITED STATES DEPARTMENT OF COMMERCE
Patent and Trademark Office
ASSISTANT SECRETARY OF COMMERCE AND
COMMISSIONER OF PATENTS AND TRADEMARKS
P.O. BOX 1450
Alexandria, Va 22313- 1450
www.uspto.gov.

DATE: December 10,, 2009
Patent No: 7,606,064
Applicant: Jeong et al.
Issued: October 20, 2009

Request for consideration of Certificate of Correction:

Consideration has been given for your request for the certificate of correction for the above-identified patent under the provisions of Rules 1.322/1.323.

Respecting the alleged errors on the title page items (30) and (63) are printed in accordance with the record. The Examiner stated "although it is acknowledged that the Foreign Priority was claimed in the declaration filed 5/30/06; this is an improper claim to Foreign Priority, since the time between US application no. 10/929,511 filed 8/30/04 is more than 12 months to the present application filed 5/30/06". Therefore, no correction(s) are in order here under United States Codes (U.S.C.) 254 Code of Federal Regulation (C.F.R.) 1.322/1.323.

In view of the foregoing, in this matter your request is hereby denied.

RoChaun Johnson for
Mary Diggs, Supervisor
Decisions and Certificates of Correction
(571) 272-0470

HARNESS, DICKEY & PIERCE P.L.C.
P.O. BOX 8910
RESTON, VIRGINIA 20195

UNITED STATES PATENT AND TRADEMARK OFFICE

UNITED STATES DEPARTMENT OF COMMERCE
United States Patent and Trademark Office
Address: COMMISSIONER FOR PATENTS
P.O. Box 1450
Alexandria, Virginia 22313-1450
www.uspto.gov

3M INNOVATIVE PROPERTIES COMPANY
PO BOX 33427
ST. PAUL, MN 55133-3427

Mail Date: 04/20/2010

Applicant	: Ronald C. Johansson	: DECISION ON REQUEST FOR
Patent Number	: 7621978	: RECALCULATION of PATENT
Issue Date	: 11/24/2009	: TERM ADJUSTMENT IN VIEW
Appliction No	: 11/420,936	: OF WYETH AND NOTICE OF INTENT TO
Filed	: 05/30/2006	: ISSUE CERTIFICATE OF CORRECTION
		:

The Request for Recalculation is **GRANTED** to the extent indicated.

The patent term adjustment has been determined to be **693** days. The USPTO will *sua sponte* issue a certificate of correction reflecting the amount of PTA days determined by the recalculation.

Prior to the issuance of the certificate of correction, the USPTO will afford patentee an opportunity to be heard and request reconsideration. Accordingly, patentee has **one month or thirty (30) days**, whichever is longer, to file a request for reconsideration of this patent term adjustment calculation. See 35 U.S.C. 154(b)(3)(B)(ii) and 37 CFR 1.322(a)(4). No extensions of time will be granted under 37 CFR 1.136.

Patentee should use document code PET.OP if electronically filing a request for reconsideration of this patent term adjustment calculation. The patentee must also include the information required by 37 CFR 1.705(b)(2) and the fee required by 37 CFR 1.18(e). If patentee does not file a timely request for reconsideration of this patent term adjustment calculation including the information required by 37 CFR 1.705(b)(2) and the fee required by 37 CFR 1.18(e), the USPTO will issue a certificate of correction reflecting the PTA determination noted above.

Patentee should be aware that in order to preserve the right to review in the United States District Court for the District of Columbia of the USPTO patent term adjustment determination, patentee must ensure that he or she also take the steps required under 35 U.S.C. 154(b)(4)(A) in a timely manner. Nothing in the request for recalculation should be construed as providing an alternative time frame for commencing a civil action under 35 U.S.C. 154(b)(4)(A).

Any questions concerning this decision should be directed to the Office of Patent Legal Administration at 571-272-7702.

UNITED STATES PATENT AND TRADEMARK OFFICE

Commissioner for Patents
United States Patent and Trademark Office
P.O. Box 1450
Alexandria, VA 22313-1450
www.uspto.gov

MICHAEL BLAINE BROOKS, PC
P.O. BOX 1630
SIMI VALLEY, CA 93062-1630

MAILED

JUL 20 2010

OFFICE OF PETITIONS

In re Application of	:	
Deepak V. Ayyagari, et al.	:	
Application No. 11/420,945	:	DECISION GRANTING PETITION
Filed: May 30, 2006	:	UNDER 37 CFR 1.313(c)(2)
Attorney Docket No. SLA1804	:	

This is a decision on the petition under 37 CFR 1.313(c)(2), filed July 19, 2010, to withdraw the above-identified application from issue after payment of the issue fee.

The petition is **GRANTED**.

The above-identified application is withdrawn from issue for consideration of a submission under 37 CFR 1.114 (request for continued examination). *See* 37 CFR 1.313(c)(2).

Petitioner is advised that the issue fee paid on May 4, 2010 cannot be refunded. If, however, this application is again allowed, petitioner may request that it be applied towards the issue fee required by the new Notice of Allowance.[1]

Telephone inquiries concerning this decision should be directed to undersigned at (571) 272-1642. All other inquiries concerning the examination or status of this application should be directed to the Technology Center.

This application is being referred to Technology Center AU 2472 for processing of the request for continued examination under 37 CFR 1.114 and for consideration of the concurrently filed information disclosure statement

/AMW/
April M. Wise
Petitions Examiner
Office of Petitions

---

[1] *The request to apply the issue fee to the new Notice may be satisfied by completing and returning the new Part B – Fee(s) Transmittal Form (along with any balance due at the time of submission). Petitioner is advised that the Issue Fee Transmittal Form must be completed and timely submitted to avoid abandonment of the application.*

UNITED STATES PATENT AND TRADEMARK OFFICE

UNITED STATES DEPARTMENT OF COMMERCE
United States Patent and Trademark Office
Address: COMMISSIONER FOR PATENTS
P.O. Box 1450
Alexandria, Virginia 22313-1450
www.uspto.gov

APPLICATION NO.	FILING DATE	FIRST NAMED INVENTOR	ATTORNEY DOCKET NO.	CONFIRMATION NO.
11/420,957	05/30/2006	Amit Kumar Kesarwani	RLL-693US	1878

7590 02/14/2008

RANBAXY INC.
600 COLLEGE ROAD EAST
SUITE 2100
PRINCETON, NJ 08540

EXAMINER
WOODWARD, MICHAEL P

ART UNIT	PAPER NUMBER
1615	

MAIL DATE	DELIVERY MODE
02/14/2008	PAPER

DECISION GRANTING PETITION UNDER 37 CFR 1.138(d)

The declaration of express abandonment is recognized

This is in response to the petition under 37 CFR 1.138(d), requesting for a refund of any previously paid search fee and excess claims fee in the above-identified application.

The petition is granted.

The express abandonment is recognized. Any previously paid search fee and excess claims fee are hereby refunded.

Telephone inquiries should be directed to the Office of Data Management at (571) 272-4200.

Patent Publication Branch
Office of Data Management

Adjustment date: 02/14/2008 KKING1
05/31/2006 INTEFSW 00000272 500912 11420957
02 FC:1111 500.00 CR

FORM PET651G (Rev. 08/07)

UNITED STATES PATENT AND TRADEMARK OFFICE

Commissioner for Patents
United States Patent and Trademark Office
P.O. Box 1450
Alexandria, VA 22313-1450
www.uspto.gov

BAKER & MCKENZIE LLP
PATENT DEPARTMENT
2001 ROSS AVENUE
SUITE 2300
DALLAS, TX 75201

COPY MAILED

FEB 21 2007

OFFICE OF PETITIONS

In re Application of	:	
Chih-Hung Lu et al	:	
Application No. 11/420,958	:	DECISION ON PETITION
Filed: May 30, 2006	:	
Attorney Docket No. 87004059-672003	:	

This is a decision on the petition under 37 CFR 1.182, filed, August 21, 2006, to correct the spelling of the name of second named inventor "Ming-Ta Lu" to Ming-Ta Liu.

The petition is **GRANTED**.

Office records have been corrected to reflect the correct spelling of the above-named inventor. A corrected Filing Receipt, which sets forth the correct spelling of the above-named inventor, accompanies this decision on petition.

As authorized, the $400 fee for the petition under 37 CFR 1.182 has been assessed to petitioner's deposit account.

Any questions concerning this matter may be directed to Irvin Dingle at (571) 272-3210.

Irvin Dingle
Petition Examiner
Office of Petitions

ATTACHMENT: Corrected Filing Receipt

UNITED STATES PATENT AND TRADEMARK OFFICE

UNITED STATES DEPARTMENT OF COMMERCE
United States Patent and Trademark Office
Address: COMMISSIONER FOR PATENTS
P.O. Box 1450
Alexandria, Virginia 22313-1450
www.uspto.gov

APPL NO.	FILING OR 371 (c) DATE	ART UNIT	FIL FEE REC'D	ATTY.DOCKET NO	DRAWINGS	TOT CLMS	IND CLMS
11/420,958	05/30/2006	2182	525	87004059-672003	7	24	3

CONFIRMATION NO. 1879
CORRECTED FILING RECEIPT
OC000000022580175
OC000000022580175

23562
BAKER & MCKENZIE LLP
PATENT DEPARTMENT
2001 ROSS AVENUE
SUITE 2300
DALLAS, TX 75201

Date Mailed: 02/21/2007

Receipt is acknowledged of this regular Patent Application. It will be considered in its order and you will be notified as to the results of the examination. Be sure to provide the U.S. APPLICATION NUMBER, FILING DATE, NAME OF APPLICANT, and TITLE OF INVENTION when inquiring about this application. Fees transmitted by check or draft are subject to collection. Please verify the accuracy of the data presented on this receipt. **If an error is noted on this Filing Receipt, please mail to the Commissioner for Patents P.O. Box 1450 Alexandria Va 22313-1450. Please provide a copy of this Filing Receipt with the changes noted thereon. If you received a "Notice to File Missing Parts" for this application, please submit any corrections to this Filing Receipt with your reply to the Notice. When the USPTO processes the reply to the Notice, the USPTO will generate another Filing Receipt incorporating the requested corrections (if appropriate).**

Applicant(s)

Chih-Hung Lu, Hsinchu, TAIWAN;
Ming-Ta Liu, Hsinchu, TAIWAN;
Cho-Yi Lin, Hsinchu, TAIWAN;

Assignment For Published Patent Application

PIXART IMAGING INC., Hsinchu, TAIWAN

Power of Attorney: The patent practitioners associated with Customer Number **23562**.

Domestic Priority data as claimed by applicant

Foreign Applications

If Required, Foreign Filing License Granted: 06/07/2006

The country code and number of your priority application, to be used for filing abroad under the Paris Convention, is US11/420,958

Projected Publication Date: 12/06/2007

Non-Publication Request: No

Early Publication Request: No

**** SMALL ENTITY ****

Title

Data communication system

Preliminary Class

710

PROTECTING YOUR INVENTION OUTSIDE THE UNITED STATES

Since the rights granted by a U.S. patent extend only throughout the territory of the United States and have no effect in a foreign country, an inventor who wishes patent protection in another country must apply for a patent in a specific country or in regional patent offices. Applicants may wish to consider the filing of an international application under the Patent Cooperation Treaty (PCT). An international (PCT) application generally has the same effect as a regular national patent application in each PCT-member country. The PCT process **simplifies** the filing of patent applications on the same invention in member countries, but **does not result** in a grant of "an international patent" and does not eliminate the need of applicants to file additional documents and fees in countries where patent protection is desired.

Almost every country has its own patent law, and a person desiring a patent in a particular country must make an application for patent in that country in accordance with its particular laws. Since the laws of many countries differ in various respects from the patent law of the United States, applicants are advised to seek guidance from specific foreign countries to ensure that patent rights are not lost prematurely.

Applicants also are advised that in the case of inventions made in the United States, the Director of the USPTO must issue a license before applicants can apply for a patent in a foreign country. The filing of a U.S. patent application serves as a request for a foreign filing license. The application's filing receipt contains further information and guidance as to the status of applicant's license for foreign filing.

Applicants may wish to consult the USPTO booklet, "General Information Concerning Patents" (specifically, the section entitled "Treaties and Foreign Patents") for more information on timeframes and deadlines for filing foreign patent applications. The guide is available either by contacting the USPTO Contact Center at 800-786-9199, or it can be viewed on the USPTO website at http://www.uspto.gov/web/offices/pac/doc/general/index.html.

For information on preventing theft of your intellectual property (patents, trademarks and copyrights), you may wish to consult the U.S. Government website, http://www.stopfakes.gov. Part of a Department of Commerce initiative, this website includes self-help "toolkits" giving innovators guidance on how to protect intellectual property in specific countries such as China, Korea and Mexico. For questions regarding patent enforcement issues, applicants may call the U.S. Government hotline at 1-866-999-HALT (1-866-999-4158).

LICENSE FOR FOREIGN FILING UNDER
Title 35, United States Code, Section 184
Title 37, Code of Federal Regulations, 5.11 & 5.15

GRANTED

The applicant has been granted a license under 35 U.S.C. 184, if the phrase "IF REQUIRED, FOREIGN FILING LICENSE GRANTED" followed by a date appears on this form. Such licenses are issued in all applications where the conditions for issuance of a license have been met, regardless of whether or not a license may be required as set forth in 37 CFR 5.15. The scope and limitations of this license are set forth in 37 CFR 5.15(a) unless an earlier license has been issued under 37 CFR 5.15(b). The license is subject to revocation upon written notification. The

date indicated is the effective date of the license, unless an earlier license of similar scope has been granted under 37 CFR 5.13 or 5.14.

This license is to be retained by the licensee and may be used at any time on or after the effective date thereof unless it is revoked. This license is automatically transferred to any related applications(s) filed under 37 CFR 1.53(d). This license is not retroactive.

The grant of a license does not in any way lessen the responsibility of a licensee for the security of the subject matter as imposed by any Government contract or the provisions of existing laws relating to espionage and the national security or the export of technical data. Licensees should apprise themselves of current regulations especially with respect to certain countries, of other agencies, particularly the Office of Defense Trade Controls, Department of State (with respect to Arms, Munitions and Implements of War (22 CFR 121-128)); the Bureau of Industry and Security, Department of Commerce (15 CFR parts 730-774); the Office of Foreign Assets Control, Department of Treasury (31 CFR Parts 500+) and the Department of Energy.

NOT GRANTED

No license under 35 U.S.C. 184 has been granted at this time, if the phrase "IF REQUIRED, FOREIGN FILING LICENSE GRANTED" DOES NOT appear on this form. Applicant may still petition for a license under 37 CFR 5.12, if a license is desired before the expiration of 6 months from the filing date of the application. If 6 months has lapsed from the filing date of this application and the licensee has not received any indication of a secrecy order under 35 U.S.C. 181, the licensee may foreign file the application pursuant to 37 CFR 5.15(b).

UNITED STATES PATENT AND TRADEMARK OFFICE

COMMISSIONER FOR PATENTS
UNITED STATES PATENT AND TRADEMARK OFFICE
P.O. BOX 1450
ALEXANDRIA, VA 22313-1450
www.uspto.gov

HULSEY IP INTELLECTUAL PROPERTY LAWYERS, P.C.
1250 S. CAPITAL OF TEXAS HIGHWAY
BUILDING THREE, SUITE 610
AUSTIN TX 78746

COPY MAILED

AUG 13 2007

OFFICE OF PETITIONS

In re Application of	:	
Rogers, et al.	:	
Application No. 11/420,976	:	DECISION ON PETITION
Filed: May 30, 2006	:	
Attorney Docket No. NXQT001US0	:	

This is a decision on the petition under the unintentional provisions of 37 CFR 1.137(b), filed April 10, 2007 (certificate of mailing date April 4, 2007), to revive the above-identified application.

The petition is **GRANTED**.

The application became abandoned for failure to reply in a timely manner to the Notice to File Missing Parts of Nonprovisional Application (Notice), mailed June 9, 2006. The Notice set a period for reply of two (2) months from the mail date of the Notice. No extensions of time under the provisions of 37 CFR 1.136(a) were obtained. Accordingly, the application became abandoned on August 10, 2006.

The petition satisfies the requirements of 37 CFR 1.137(b) in that petitioner has supplied (1) the reply in the form of the basic filing fee, an executed declaration, additional claim fees, the search fee, the examination fee, and a surcharge, (2) the petition fee of $750.00, and (3) an acceptable statement of unintentional delay.

37 CFR 1.137(b)(3) requires a statement that "the entire delay in filing the required reply from the due date for the reply until the filing of a grantable petition pursuant to 37 CFR 1.137(b) was unintentional." Since the statement appearing in the petition varies from the language required by 37 CFR 1.137(b)(3), the statement is being construed as the required statement. Petitioners must notify the Office if this is **not** a correct reading of the statement appearing in the petition.

Telephone inquiries concerning this decision should be directed to the undersigned at (571)272-3230.

This application is being referred to the Office of Initial Patent Examination for further processing.

Shirene Willis Brantley

Shirene Willis Brantley
Senior Petitions Attorney
Office of Petitions

UNITED STATES PATENT AND TRADEMARK OFFICE

UNITED STATES DEPARTMENT OF COMMERCE
United States Patent and Trademark Office
Address: COMMISSIONER FOR PATENTS
P.O. Box 1450
Alexandria, Virginia 22313-1450
www.uspto.gov

HULSEY IP INTELLECTUAL PROPERTY LAWYERS, P.C.
919 Congress Avenue, Suite 919
AUSTIN, TX 78701

Mail Date: 04/21/2010

Applicant	: Steven Rogers	: DECISION ON REQUEST FOR
Patent Number	: 7607092	: RECALCULATION of PATENT
Issue Date	: 10/20/2009	: TERM ADJUSTMENT IN VIEW
Appliction No	: 11/420,976	: OF WYETH AND NOTICE OF INTENT TO
Filed	: 05/30/2006	: ISSUE CERTIFICATE OF CORRECTION
		:

The Request for Recalculation is **GRANTED** to the extent indicated.

The patent term adjustment has been determined to be **128** days. The USPTO will *sua sponte* issue a certificate of correction reflecting the amount of PTA days determined by the recalculation.

Prior to the issuance of the certificate of correction, the USPTO will afford patentee an opportunity to be heard and request reconsideration. Accordingly, patentee has **one month or thirty (30) days**, whichever is longer, to file a request for reconsideration of this patent term adjustment calculation. See 35 U.S.C. 154(b)(3)(B)(ii) and 37 CFR 1.322(a)(4). No extensions of time will be granted under 37 CFR 1.136.

Patentee should use document code PET.OP if electronically filing a request for reconsideration of this patent term adjustment calculation. The patentee must also include the information required by 37 CFR 1.705(b)(2) and the fee required by 37 CFR 1.18(e). If patentee does not file a timely request for reconsideration of this patent term adjustment calculation including the information required by 37 CFR 1.705(b)(2) and the fee required by 37 CFR 1.18(e), the USPTO will issue a certificate of correction reflecting the PTA determination noted above.

Patentee should be aware that in order to preserve the right to review in the United States District Court for the District of Columbia of the USPTO patent term adjustment determination, patentee must ensure that he or she also take the steps required under 35 U.S.C. 154(b)(4)(A) in a timely manner. Nothing in the request for recalculation should be construed as providing an alternative time frame for commencing a civil action under 35 U.S.C. 154(b)(4)(A).

Any questions concerning this decision should be directed to the Office of Patent Legal Administration at 571-272-7702.

UNITED STATES PATENT AND TRADEMARK OFFICE

UNITED STATES DEPARTMENT OF COMMERCE
United States Patent and Trademark Office
Address: COMMISSIONER FOR PATENTS
P.O. Box 1450
Alexandria, Virginia 22313-1450
www.uspto.gov

Christopher M. Goff (27839)
ARMSTRONG TEASDALE LLP
7700 Forsyth Boulevard
Suite 1800
St. Louis, MO 63105

Mail Date: 07/08/2010

Applicant	: John David Amundson	: DECISION ON REQUEST FOR
Patent Number	: 7654412	: RECALCULATION of PATENT
Issue Date	: 02/02/2010	: TERM ADJUSTMENT IN VIEW
Application No	: 11/420,980	: OF WYETH AND NOTICE OF INTENT TO
Filed	: 05/30/2006	: ISSUE CERTIFICATE OF CORRECTION
		:

The Request for Recalculation is **GRANTED** to the extent indicated.

The patent term adjustment has been determined to be **466** days. The USPTO will *sua sponte* issue a certificate of correction reflecting the amount of PTA days determined by the recalculation.

Prior to the issuance of the certificate of correction, the USPTO will afford patentee an opportunity to be heard and request reconsideration. Accordingly, patentee has **one month or thirty (30) days**, whichever is longer, to file a request for reconsideration of this patent term adjustment calculation. See 35 U.S.C. 154(b)(3)(B)(ii) and 37 CFR 1.322(a)(4). No extensions of time will be granted under 37 CFR 1.136.

Patentee should use document code PET.OP if electronically filing a request for reconsideration of this patent term adjustment calculation. The patentee must also include the information required by 37 CFR 1.705(b)(2) and the fee required by 37 CFR 1.18(e). If patentee does not file a timely request for reconsideration of this patent term adjustment calculation including the information required by 37 CFR 1.705(b)(2) and the fee required by 37 CFR 1.18(e), the USPTO will issue a certificate of correction reflecting the PTA determination noted above.

Patentee should be aware that in order to preserve the right to review in the United States District Court for the District of Columbia of the USPTO patent term adjustment determination, patentee must ensure that he or she also take the steps required under 35 U.S.C. 154(b)(4)(A) in a timely manner. Nothing in the request for recalculation should be construed as providing an alternative time frame for commencing a civil action under 35 U.S.C. 154(b)(4)(A).

Any questions concerning this decision should be directed to the Office of Patent Legal Administration at 571-272-7702.

UNITED STATES PATENT AND TRADEMARK OFFICE

UNITED STATES DEPARTMENT OF COMMERCE
United States Patent and Trademark Office
Address: COMMISSIONER FOR PATENTS
P.O. Box 1450
Alexandria, Virginia 22313-1450
www.uspto.gov

Christopher M. Goff (27839)
ARMSTRONG TEASDALE LLP
7700 Forsyth Boulevard
Suite 1800
St. Louis, MO 63105

Mail Date: 07/13/2010

Applicant	: Gerald Sosalla	: DECISION ON REQUEST FOR
Patent Number	: 7648046	: RECALCULATION of PATENT
Issue Date	: 01/19/2010	: TERM ADJUSTMENT IN VIEW
Application No	: 11/420,988	: OF WYETH AND NOTICE OF INTENT TO
Filed	: 05/30/2006	: ISSUE CERTIFICATE OF CORRECTION
		:

The Request for Recalculation is **GRANTED** to the extent indicated.

The patent term adjustment has been determined to be **402** days. The USPTO will *sua sponte* issue a certificate of correction reflecting the amount of PTA days determined by the recalculation.

Prior to the issuance of the certificate of correction, the USPTO will afford patentee an opportunity to be heard and request reconsideration. Accordingly, patentee has **one month or thirty (30) days**, whichever is longer, to file a request for reconsideration of this patent term adjustment calculation. See 35 U.S.C. 154(b)(3)(B)(ii) and 37 CFR 1.322(a)(4). No extensions of time will be granted under 37 CFR 1.136.

Patentee should use document code PET.OP if electronically filing a request for reconsideration of this patent term adjustment calculation. The patentee must also include the information required by 37 CFR 1.705(b)(2) and the fee required by 37 CFR 1.18(e). If patentee does not file a timely request for reconsideration of this patent term adjustment calculation including the information required by 37 CFR 1.705(b)(2) and the fee required by 37 CFR 1.18(e), the USPTO will issue a certificate of correction reflecting the PTA determination noted above.

Patentee should be aware that in order to preserve the right to review in the United States District Court for the District of Columbia of the USPTO patent term adjustment determination, patentee must ensure that he or she also take the steps required under 35 U.S.C. 154(b)(4)(A) in a timely manner. Nothing in the request for recalculation should be construed as providing an alternative time frame for commencing a civil action under 35 U.S.C. 154(b)(4)(A).

Any questions concerning this decision should be directed to the Office of Patent Legal Administration at 571-272-7702.

UNITED STATES PATENT AND TRADEMARK OFFICE

Commissioner for Patents
United States Patent and Trademark Office
P.O. Box 1450
Alexandria, VA 22313-1450
www.uspto.gov

MUSKIN & CUSICK LLC
1800 CALLOWHILL ST
SUITE 200
PHILADELPHIA, PA 19130

COPY MAILED
NOV 24 2006
OFFICE OF PETITIONS

In re Application of	:	
Darin Piburn et al	:	
Application No. 11/420,996	:	DECISION ON PETITION
Filed: May 30, 2006	:	TO MAKE SPECIAL UNDER
Attorney Docket No. 864-02	:	37 CFR 1.102(d)
	:	

This is a decision on the petition under 37 CFR §1.102(d), filed August 9, 2006, to make the above-identified application special based on actual infringement as set forth in M.P.E.P. § 708.02, Section II.

The petition is **GRANTED.**

A grantable petition to make an application special under 37 CFR §1.102(d) and MPEP §708.02, Section II: Infringement, must be accompanied by the required fee pursuant to 37 CFR 1.17(h) and a statement by the applicant, assignee, or attorney/agent registered to practice before the office alleging:

> (A) That there is an infringing device or product actually on the market or method in use;
>
> (B) That a rigid comparison of the alleged infringing device, product, or method with the claims of the application has been made, and that, in his or her opinion, some of the claims are unquestionably infringed; and
>
> (C) That he or she has made or caused to be made a careful and thorough search of the prior art or has a good knowledge of the pertinent prior art.
>
> Applicant must provide one copy of each of the references deemed most closely related to the subject matter encompassed by the claims if said references are not already of record.

The petition complies with all the above stated requirements. Accordingly, the above-identified application has been accorded "special" status.

Telephone inquiries concerning this decision should be directed to Irvin Dingle at 571-272-3210.

All other inquiries concerning either the examination or status of the application should be directed to the Technology Center.

The application is being forwarded to the Technology Center Art Unit 3635 for action on the merits commensurate with this decision.

David Bucci
Petitions Examiner
Office of Petitions

UNITED STATES PATENT AND TRADEMARK OFFICE

Commissioner for Patents
United States Patent and Trademark Office
P.O. Box 1450
Alexandria, VA 22313-1450
www.uspto.gov

FREESCALE SEMICONDUCTOR, INC.
LAW DEPARTMENT
7700 WEST PARMER LANE MD:TX32/PL02
AUSTIN, TX 78729

COPY MAILED

SEP 15 2006

OFFICE OF PETITIONS

In re Application of Gautham	:	
Application No. 11/421,006	:	Decision Refusing Status
Filed: May 30, 2006	:	Under 37 CFR 1.47(a)
Attorney Docket No. SC13772MP	:	
For: Method of Forming A Trace	:	
Embedded Package	:	

This is in response to the petition under 37 CFR 1.47(a), filed May 30, 2006.

The petition is **DISMISSED**.

Any request for reconsideration of this decision must be submitted within TWO (2) MONTHS from the mail date of this decision. Extensions of time under 37 CFR 1.136(a) are permitted. No further petition fee is required for the request. Any response should be entitled "Request for Reconsideration of Petition Under 37 CFR 1.47(a)" and may include an oath or declaration executed by the current non-signing inventor(s). **Failure to respond will result in abandonment of the application.**

Although well drafted, the petition fails to recognize a showing is required under 37 CFR 1.47(a) rather than 1.47(b). The provisions of 37 CFR 1.47(b) only apply if none of the inventors have signed the oath or Declaration. Since at least one of the named inventors has executed the application papers, the petition is appropriately treated under 37 CFR 1.47(a).

When a petition under 37 CFR 1.47(a) is filed, the signing inventors, not the assignee, must sign the declaration on behalf of the non-signing inventor. The instant declaration is signed by the assignee on behalf of the inventors.

A new oath or declaration should be filed. Petitioner should note that an oath or declaration signed by all the available joint inventors with the signature block of the nonsigning inventor left blank, and without reference to the assignee, may be treated as having been signed by all the available joint inventors on behalf of the nonsigning inventor, unless otherwise indicated.

Further correspondence with respect to this matter should be addressed as follows:

By facsimile: (571) 273-8300
Attn: Office of Petitions

By mail: Mail Stop Petition
Commissioner for Patents
P.O. Box 1450
Alexandria, VA 22313-1450

Telephone inquiries regarding this communication should be directed to Petitions Attorney Steven Brantley at (571) 272-3203.

Charles Steven Brantley
Senior Petitions Attorney
Office of Petitions

UNITED STATES PATENT AND TRADEMARK OFFICE

Commissioner for Patents
United States Patent and Trademark Office
P.O. Box 1450
Alexandria, VA 22313-1450
www.uspto.gov

FREESCALE SEMICONDUCTOR, INC.
LAW DEPARTMENT
7700 WEST PARMER LANE MD:TX32/PL02
AUSTIN, TX 78729

COPY MAILED
JAN 0 5 2007
OFFICE OF PETITIONS

In re Application of Gautham :
Application No. 11/421,006 :
Filed: May 30, 2006 :
Attorney Docket No. SC13772MP :
For: Method of Forming A Trace :
Embedded Package :

Decision According Status
Under 37 CFR 1.47(a)

This is in response to the renewed petition under 37 CFR 1.47(a), filed October 12, 2006.

The petition is **granted**.

The above-identified application and papers have been reviewed and found in compliance with 37 CFR 1.47(a). This application is hereby accorded Rule 1.47(a) status.

As provided in Rule 1.47(c), this Office will forward notice of this application's filing to the non-signing inventor at the address given in the petition. Notice of the filing of this application will also be published in the Official Gazette.

The Office of Initial Patent Examination will be informed of the instant decision so that it may continue to prepare the application for examination.

Telephone inquiries regarding this communication should be directed to Petitions Attorney Steven Brantley at (571) 272-3203.

Charles Steven Brantley
Senior Petitions Attorney
Office of Petitions

UNITED STATES PATENT AND TRADEMARK OFFICE

Commissioner for Patents
United States Patent and Trademark Office
P.O. Box 1450
Alexandria, VA 22313-1450
www.uspto.gov

Viswanadam Gautham
Blk 103 Serangoon North Ave 1
#05-771
Singapore 550103
REPUBLIC OF SINGAPORE

COPY MAILED

JAN 0 5 2007

OFFICE OF PETITIONS

In re Application of Gautham	:	
Application No. 11/421,006	:	
Filed: May 30, 2006	:	Letter
Attorney Docket No. SC13772MP	:	
For: Method of Forming A Trace	:	
Embedded Package	:	

Mr. Gautham:

You are named as a joint inventor in the above identified United States patent application.

Should a patent be granted on the application you will be designated therein as a joint inventor.

As a named inventor you, or a registered patent attorney or agent on your behalf, have the right to obtain copies of any papers in the file wrapper. Information regarding how to pay for and order a copy of the application, or a specific paper in the application, should be directed to Certification Division at (703) 308-9726 or 1 (800) 972-6382 (outside the Washington D.C. area).

General requests for information regarding the application should be directed to the File Information Unit at (703) 308-2733.

Telephone inquiries regarding this communication may be directed to Petitions Attorney Steven Brantley at (571) 272-3203.

Charles Steven Brantley
Petitions Attorney
Office of Petitions

cc: FREESCALE SEMICONDUCTOR, INC.
LAW DEPARTMENT
7700 WEST PARMER LANE MD:TX32/PL02
AUSTIN, TX 78729

UNITED STATES PATENT AND TRADEMARK OFFICE

Commissioner for Patents
United States Patent and Trademark Office
P.O. Box 1450
Alexandria, VA 22313-1450
www.uspto.gov

H. GORDON SHIELDS
7830 NORTH 23RD AVENUE
PHOENIX AZ 85021

COPY MAILED

SEP 29 2006

OFFICE OF PETITIONS

ON PETITION

In re Application of	:	
Collins et al.	:	
Application No. 11/421,017	:	
Filed: May 30, 2006	:	
Attorney Docket No. 5010	:	

This is a decision on the petition under 37 CFR 1.102(c)(1), filed July 6, 2006, to make the above-identified application special based on applicant's age as set forth in M.P.E.P. § 708.02, Section IV.

The petition is **GRANTED**.

A grantable petition to make an application special under 37 CFR 1.102(c)(1) and MPEP § 708.02, Section IV: Applicant's Age must be accompanied by evidence showing that at least one of the applicants is 65 years of age, or more, such as a birth certificate or a statement by applicant. No fee is required.

The instant petition includes a Declaration from the applicant, Ralph C. Collins, along with a copy of his Certificate of Birth. Accordingly, the above-identified application has been accorded "special" status.

Telephone inquiries concerning this decision should be directed to the undersigned at 571-272-3206. All other inquiries concerning either the examination or status of the application should be directed to the Technology Center.

This matter is being referred to the Technology Center Art Unit 2838 for action on the merits commensurate with this decision.

Liana Chase
Petitions Examiner
Office of Petitions

UNITED STATES PATENT AND TRADEMARK OFFICE

Commissioner for Patents
United States Patent and Trademark Office
P.O. Box 1450
Alexandria, VA 22313-1450
www.uspto.gov

MEADWESTVACO CORPORATION
ATTN: IP LEGAL DEPARTMENT
1021 MAIN CAMPUS DRIVE
RALEIGH, NC 27606

MAILED

MAY 03 2010

OFFICE OF PETITIONS

ON PETITION

In re Application of
Tom Von Bokel
Application No. 11/421,020
Filed: May 30, 2006
Attorney Docket No. D-3202-1

This is a decision on the petition under 37 CFR 1.137(b) to revive the above-identified application, filed February 22, 2010.

The petition is **GRANTED**.

The application became abandoned for failure s to timely pay the issue and publication fees on or before January 19, 2010, as required by the Notice of Allowance and Fee(s) Due, mailed October 16, 2009, which set a statutory period for reply of three (3) months. Accordingly, the application became abandoned on January 17, 2009. A Notice of Abandonment was subsequently mailed on February 2, 2010. On February 22, 2010, the present petition was filed.

The file does not indicate a change of address has been submitted, although the address given on the petition differs from the address of record. If appropriate, a change of address should be filed in accordance with MPEP 601.03. A courtesy copy of this decision is being mailed to the address given on the petition; however, the Office will mail all future correspondence solely to the address of record.

The petition satisfies the requirements of 37 CFR 1.137(b) in that petitioner has supplied (1) the reply in the form of the $1,510 issue fee and $300 publication fee; (2) the petition fee of $1,620; and (3) an adequate statement of unintentional delay.

The application is being referred to the Office of Data Management to be processed into a patent.

Telephone inquires related to this decision should be directed to the undersigned at (571) 272-3204. Telephone inquiries related to processing as a patent should be directed to (571) 272-4200.

Sherry D. Brinkley
Petitions Examiner
Office of Petitions

cc: CYNTHIA PARKS
1117 PERIMETER CENTER WEST
SUITE E402
ATLANTA, GA 30338

UNITED STATES PATENT AND TRADEMARK OFFICE

Commissioner for Patents
United States Patent and Trademark Office
P.O. Box 1450
Alexandria, VA 22313-1450
www.uspto.gov

GONZALES PATENT SERVICES
4605 CONGRESS AVE. NW
ALBUQUERQUE NM 87114

COPY MAILED

DEC 07 2009

OFFICE OF PETITIONS

In re Application of	:	
Andrew Stephen Van Luchene	:	
Application No. 11/421,025	:	DECISION ON PETITION
Filed: May 30, 2006	:	TO WITHDRAW
Attorney Docket No. 3105102	:	FROM RECORD
	:	

This is a decision on the Request to Withdraw as attorney or agent of record under 37 C.F.R. § 1.36(b), filed October 5, 2009.

The request is **NOT APPROVED.**

A grantable request to withdraw as attorney/agent of record must be signed by every attorney/agent seeking to withdraw or contain a clear indication that one attorney is signing on behalf of another/others. The Office requires the practitioner(s) requesting withdrawal to certify that he, she, or they have: (1) given reasonable notice to the client, prior to the expiration of the response period, that the practitioner(s) intends to withdraw from employment; (2) delivered to the client or a duly authorized representative of the client all papers and property (including funds) to which the client is entitled; and (3) notified the client of any responses that may be due and the time frame within which the client must respond, pursuant 37 CFR 10.40(c).

The request cannot be approved because there is no indication that the acts noted in the above-identified certifications have been performed. Refer to Form No. PTO/SB/83 (Updated 4/2008).

It should also be noted that the request cannot be approved because no reasons for withdrawal have been provided. The Office cannot, at this time, determine whether practitioner's request is one of the mandatory or permissive reasons enumerated in 37 CFR 10.40. Any subsequent requests must include reasons for withdrawal. Please note that there is a space provided for on PTO/SB/83 (Request to Withdraw as Attorney or Agent) to supply practitioner's reasons.

All future communications from the Office will continue to be directed to the above-listed address until otherwise notified by applicant.

Telephone inquiries concerning this decision should be directed to the undersigned at 571-272-4618.

Kimberly Inabinet

Kimberly Inabinet
Petitions Examiner
Office of Petitions

UNITED STATES PATENT AND TRADEMARK OFFICE

Commissioner for Patents
United States Patent and Trademark Office
P.O. Box 1450
Alexandria, VA 22313-1450
www.uspto.gov

MACMILLAN, SOBANSKI & TODD, LLC
ONE MARITIME PLAZA
720 WATER STREET
5TH FLOOR
TOLEDO OH 43604

MAILED

MAY 24 2010

OFFICE OF PETITIONS

In re Application of
David T. Renke et al
Application No. 11/421,087
Filed: May 31, 2006
Attorney Docket No. GP-306801-NAPD-LCH

DECISION ON PETITION

This is a decision on the petition under the unintentional provisions of 37 CFR 1.137(b), filed March 24, 2010, to revive the above-identified application.

The petition is **GRANTED**.

The petition satisfies the conditions for revival pursuant to the provisions of 37 CFR 1.137(b) in that (1) the reply in the form of a Notice of Appeal; (2) the petition fee; and (3) the required statement of unintentional delay have been received. Accordingly, the reply to the final rejection mailed July 14, 2009, (an advisory action was mailed on March 12, 2010), is accepted as having been unintentionally delayed.

It is noted that an Appeal Brief was received on May 13, 2010.

It is not apparent whether the person signing the statement of unintentional delay was in a position to have firsthand or direct knowledge of the facts and circumstances of the delay at issue. Nevertheless, such statement is being treated as having been made as the result of a reasonable inquiry into the facts and circumstances of such delay. See 37 CFR 10.18(b) and Changes to Patent Practice and Procedure; Final Rule Notice, 62 Fed. Reg. 53131, 53178 (October 10, 1997), 1203 Off. Gaz. Pat. Office 63, 103 (October 21, 1997). In the event that such an inquiry has not been made, petitioner must make such an inquiry. If such inquiry results in the discovery that it is not correct that the entire delay in filing the required reply from the due date for the reply until the filing of a grantable petition pursuant to 37 CFR 1.137(b) was unintentional, petitioner must notify the Office.

There is no indication that the person signing the instant petition was ever given a power of attorney or authorization of agent to prosecute the above-identified application. If the person signing the instant petition desires to receive future correspondence regarding this application,

the appropriate power of attorney or authorization of agent must be submitted. While a courtesy copy of this decision is being mailed to the person signing the instant petition, all future correspondence will be directed to the address currently of record until such time as appropriate instructions are received to the contrary.

Telephone inquiries concerning this decision should be directed to the undersigned at (571) 272-3208.

This application is being referred to Technology Center AU 3612 for appropriate action by the Examiner in the normal course of business on the reply received March 24, 2010 and the Appeal Brief received on May 13, 2010.

/KOC/
Karen Creasy
Petitions Examiner
Office of Petitions

cc:

DONALD A. WILKINSON
38705 7 MILE ROAD, SUITE 405
LIVONIA, MI 48152

UNITED STATES PATENT AND TRADEMARK OFFICE

UNITED STATES DEPARTMENT OF COMMERCE
United States Patent and Trademark Office
Address: COMMISSIONER FOR PATENTS
P.O. Box 1450
Alexandria, Virginia 22313-1450
www.uspto.gov

BORGWARNER INC.
c/o Brown & Michaels, PC
400 M&T Bank Building
118 N. Tioga Street
Ithaca, NY 14850

Mail Date: 04/20/2010

Applicant	: Daniele Redaelli	: DECISION ON REQUEST FOR
Patent Number	: 7641576	: RECALCULATION of PATENT
Issue Date	: 01/05/2010	: TERM ADJUSTMENT IN VIEW
Appliction No	: 11/421,090	: OF WYETH AND NOTICE OF INTENT TO
Filed	: 05/31/2006	: ISSUE CERTIFICATE OF CORRECTION
		:

The Request for Recalculation is **GRANTED** to the extent indicated.

The patent term adjustment has been determined to be **428** days. The USPTO will *sua sponte* issue a certificate of correction reflecting the amount of PTA days determined by the recalculation.

Prior to the issuance of the certificate of correction, the USPTO will afford patentee an opportunity to be heard and request reconsideration. Accordingly, patentee has **one month or thirty (30) days**, whichever is longer, to file a request for reconsideration of this patent term adjustment calculation. See 35 U.S.C. 154(b)(3)(B)(ii) and 37 CFR 1.322(a)(4). No extensions of time will be granted under 37 CFR 1.136.

Patentee should use document code PET.OP if electronically filing a request for reconsideration of this patent term adjustment calculation. The patentee must also include the information required by 37 CFR 1.705(b)(2) and the fee required by 37 CFR 1.18(e). If patentee does not file a timely request for reconsideration of this patent term adjustment calculation including the information required by 37 CFR 1.705(b)(2) and the fee required by 37 CFR 1.18(e), the USPTO will issue a certificate of correction reflecting the PTA determination noted above.

Patentee should be aware that in order to preserve the right to review in the United States District Court for the District of Columbia of the USPTO patent term adjustment determination, patentee must ensure that he or she also take the steps required under 35 U.S.C. 154(b)(4)(A) in a timely manner. Nothing in the request for recalculation should be construed as providing an alternative time frame for commencing a civil action under 35 U.S.C. 154(b)(4)(A).

Any questions concerning this decision should be directed to the Office of Patent Legal Administration at 571-272-7702.

UNITED STATES PATENT AND TRADEMARK OFFICE

UNITED STATES DEPARTMENT OF COMMERCE
United States Patent and Trademark Office
Address: COMMISSIONER FOR PATENTS
P.O. Box 1450
Alexandria, Virginia 22313-1450
www.uspto.gov

SUTHERLAND ASBILL & BRENNAN LLP
999 PEACHTREE STREET, N.E.
ATLANTA, GA 30309

Mail Date: 04/21/2010

Applicant	: Ad Sidney Olansky	: DECISION ON REQUEST FOR
Patent Number	: 7595070	: RECALCULATION of PATENT
Issue Date	: 09/29/2009	: TERM ADJUSTMENT IN VIEW
Appliction No	: 11/421,091	: OF WYETH AND NOTICE OF INTENT TO
Filed	: 05/31/2006	: ISSUE CERTIFICATE OF CORRECTION
		:

The Request for Recalculation is **GRANTED** to the extent indicated.

The patent term adjustment has been determined to be **498** days. The USPTO will *sua sponte* issue a certificate of correction reflecting the amount of PTA days determined by the recalculation.

Prior to the issuance of the certificate of correction, the USPTO will afford patentee an opportunity to be heard and request reconsideration. Accordingly, patentee has **one month or thirty (30) days**, whichever is longer, to file a request for reconsideration of this patent term adjustment calculation. See 35 U.S.C. 154(b)(3)(B)(ii) and 37 CFR 1.322(a)(4). No extensions of time will be granted under 37 CFR 1.136.

Patentee should use document code PET.OP if electronically filing a request for reconsideration of this patent term adjustment calculation. The patentee must also include the information required by 37 CFR 1.705(b)(2) and the fee required by 37 CFR 1.18(e). If patentee does not file a timely request for reconsideration of this patent term adjustment calculation including the information required by 37 CFR 1.705(b)(2) and the fee required by 37 CFR 1.18(e), the USPTO will issue a certificate of correction reflecting the PTA determination noted above.

Patentee should be aware that in order to preserve the right to review in the United States District Court for the District of Columbia of the USPTO patent term adjustment determination, patentee must ensure that he or she also take the steps required under 35 U.S.C. 154(b)(4)(A) in a timely manner. Nothing in the request for recalculation should be construed as providing an alternative time frame for commencing a civil action under 35 U.S.C. 154(b)(4)(A).

Any questions concerning this decision should be directed to the Office of Patent Legal Administration at 571-272-7702.

UNITED STATES PATENT AND TRADEMARK OFFICE

Commissioner for Patents
United States Patent and Trademark Office
P.O. Box 1450
Alexandria, VA 22313-1450
www.uspto.gov

IBM CORPORATION,
T.J. WATSON RESEARCH CENTER
P.O. BOX 218
YORKTOWN HEIGHTS, NY 10598

MAILED

FEB 12 2009

OFFICE OF PETITIONS

In re Application of	:	
Alex Akilov, et al.	:	
Application No. 11/421,093	:	DECISION ON PETITION
Filed: May 31, 2006	:	
Attorney Docket No. IL920060021US1	:	

This is a decision on the petition under the unintentional provisions of 37 CFR 1.137(b), filed December 2, 2008, to revive the above-identified application.

This application became abandoned for failure to timely pay the issue and publication fees on or before October 16, 2008, as required by the Notice of Allowance and Fee(s) Due, mailed July 16, 2008. Accordingly, the date of abandonment of this application is October 17, 2008.

The petition satisfies the requirements of 37 CFR 1.137(b) in that petitioner has supplied (1) the reply in the form of payment of the issue fee of $1510 and the publication fee of $300, (2) the petition fee of $1620; and (3) a proper statement of unintentional delay.

In view of the above, the petition is **GRANTED**.

Telephone inquiries concerning this decision should be directed to undersigned at (571) 272-1642.

This application is being referred to Office of Data Management for processing into a patent.

April M. Wise
Petitions Examiner
Office of Petitions

UNITED STATES PATENT AND TRADEMARK OFFICE

Commissioner for Patents
United States Patent and Trademark Office
P.O. Box 1450
Alexandria, VA 22313-1450
www.uspto.gov

PHILIP S. JOHNSON
JOHNSON & JOHNSON
ONE JOHNSON & JOHNSON PLAZA
NEW BRUNSWICK, NJ 08933-7003

COPY MAILED

OCT 07 2008

OFFICE OF PETITIONS

In re Application of	:	
Muriel Morelli	:	
Application No. 11/421,097	:	DECISION ON PETITION
Filed: May 31, 2006	:	
Attorney Docket No. J&J5084USNP	:	

This is a decision on the petition under the unintentional provisions of 37 CFR 1.137(b), filed April 24, 2008, to revive the above-identified application.

The petition is **GRANTED**.

The application became abandoned for failure to reply in a timely manner to the non-final Office action mailed October 5, 2007, which set a shortened statutory period for reply of three (3) months. No extensions of time under the provisions of 37 CFR 1.136(a) were timely obtained. Accordingly, the application became abandoned on January 6, 2008.

The petition satisfies the requirements of 37 CFR 1.137(b) in that petitioner has supplied (1) the reply in the form of an Amendment, (2) the petition fee of $1,540.00, and (3) an adequate statement of unintentional delay.

Since this application was abandoned for failure to timely reply to the nonfinal Office action of October 5, 2007 within the extendible six month period provided therefor, the Examiner had no procedural authority with respect to the abandoned application. See Lorenz v. Finkl, 333 F.2d 885, 891, 142 USPQ 26, 30 (CCPA 1964). Therefore, the examiner was without authority to act further in the case absent a grantable petition reviving the application. Nevertheless, in view of this decision on petition, the subsequent action taken by the examiner, i.e., mailing of a Final Rejection, has been ratified. In view thereof, it is unnecessary to either vacate or remail the Office Action of July 24, 2008.

Additionally, an extension of time under 37 CFR 1.136 must be filed prior to the expiration of the maximum extendable period for reply. *See* In re Application of S., 8 USPQ2d 1630, 1631 (Comm'r Pats. 1988). Since the $1,050.00, three- month extension of time fee submitted with the petition on April 24, 2008 was subsequent to the maximum extendable period for reply, this fee is unnecessary and will be refunded to petitioner's deposit account in due course.

Telephone inquiries concerning this decision should be directed to Joan Olszewski at (571) 272-7751.

This application is being referred to Technology Center AU 1617 to await a proper response to the final Office action. Failure to timely and properly respond will result in abandonment of the application.

/Liana Walsh/
Liana Walsh
Petitions Examiner
Office of Petitions

UNITED STATES PATENT AND TRADEMARK OFFICE

Commissioner for Patents
United States Patent and Trademark Office
P.O. Box 1450
Alexandria, VA 22313-1450
www.uspto.gov

JEFFREY H. KAMENETSKY, ESQ.
CHRISTOPHER & WEISBERG, P.A., SUITE 2040
200 EAST LAS OLAS BOULEVARD
FORT LAUDERDALE, FL 33301

COPY MAILED

DEC 2 0 2006

OFFICE OF PETITIONS

In re Application of	:	
Bertram V. Burke	:	
Application No. 11/421,113	:	DECISION ON PETITION
Filed: May 31, 2006	:	TO MAKE SPECIAL UNDER
Attorney Docket No. 1357-10DIV2	:	37 CFR 1.102(c)(1)
	:	

This is a decision on the petition under 37 CFR 1.102(c)(1), filed June 2, 2006, to make the above-identified application special based on applicant's age as set forth in M.P.E.P. § 708.02, Section IV.

The petition is **GRANTED**.

A grantable petition to make an application special under 37 CFR 1.102(c)(1) and MPEP § 708.02, Section IV: Applicant's Age must be accompanied by evidence showing that at least one of the applicants is 65 years of age, or more, such as a birth certificate or a statement by applicant. No fee is required

The instant petition includes a statement from Inventor Bertram V. Burke stating that he is over 65 years of age. Accordingly, the above-identified application has been accorded "special" status.

The file does not indicate a change of address has been submitted, although the address given on the petition differs from the address of record. If appropriate, a change of address should be filed in accordance with MPEP 601.03. A courtesy copy of this decision is being mailed to the address given on the petition; however, the Office will mail all future correspondence solely to the address of record.

Telephone inquiries concerning this decision should be directed to Irvin Dingle at 571-272-3210.

All other inquiries concerning either the examination or status of the application should be directed to the Technology Center.

The application is being forwarded to the Technology Center Art Unit 2876 for action on the merits commensurate with this decision.

Irvin Dingle
Petitions Examiner
Office of Petitions

cc: Leo Stanger
P.O. Box 1455
382 Springfield Avenue
Summit, NJ 08901

UNITED STATES PATENT AND TRADEMARK OFFICE

Commissioner for Patents
United States Patent and Trademark Office
P.O. Box 1450
Alexandria, VA 22313-1450
www.uspto.gov

MAILED FROM
DIRECTOR'S OFFICE
JAN - 9 2007
TECHNOLOGY CENTER 2800

December 2006

Jeffrey H. Kamenetsky, Esq.
CHRISTOPHER & WEISBERG, P.A.
Suite 2040
200 East Las Olas Boulevard
Fort Lauderdale FL 33301

In re Application of BURKE, Bertram V. Application No. 11/421,113 Filed: May 31, 2006 For: Attorney Docket No. EPC-8C2A	: : : : :	DECISION ON PETITION TO MAKE SPECIAL

This is a decision on the petition under 37 C.F.R. § 1.102, filed June 2, 2006, to make the above-identified application special. No fee is required for this petition.

Petitioner requests that the above-identified application be made special under the accelerated examination procedure set forth in M.P.E.P. § 708.02, Item IV: Applicant's Age.

The petition is GRANTED.

A grantable petition to make special under 37 C.F.R. § 1.102 and in accordance with M.P.E.P. § 708.02, Item IV, must include a showing, as by a birth certificate or the applicant's affidavit or declaration, that the applicant is sixty-five (65) years of age or more.

The petition includes a declaration by applicant, Bertram V. Burke, stating that he is sixty-five (65) years of age or more.

The application is being forwarded to the examiner for expedited prosecution. If the examiner can make this application special without prejudice to any possible interfering applications, and he/she should make a rigid search for such, he/she is authorized to do so for the next action. Should the application be rejected, the application will not be considered special for the subsequent action unless the applicant promptly makes a bona fide effort to place the application in condition for allowance, even if it is necessary to have an interview with the examiner to accomplish this purpose.

If the examiner finds any interfering application for the same subject matter, he/she should

consider such application simultaneously with this application and should state in the official letter of such application that he/she is taking it out of its turn because of possible interference.

Should an appeal be taken in this application or should this application becomes involved in an interference, consideration of the appeal and the interference will be expedited by all Patent and Trademark Office officials concerned, contingent likewise upon diligent prosecution by the applicant.

After allowance, this application will be given priority for printing. See M.P.E.P. § 1309.

The petition is granted to the extent indicated.

Jose G. Dees, T. Quality Assurance Specialist
Technology Center 2800
Semiconductors, Electrical and Optical
Systems and Components

UNITED STATES PATENT AND TRADEMARK OFFICE

Commissioner for Patents
United States Patent and Trademark Office
P.O. Box 1450
Alexandria, VA 22313-1450
www.uspto.gov

HESLIN ROTHENBERG FARLEY & MESITI P.C.
5 COLUMBIA CIRCLE
ALBANY NY 12203

COPY MAILED

APR 0 6 2007

OFFICE OF PETITIONS

In re Application of :

BRADDOCK, Danny H. Jr. et al. :
Application No. 11/421,119 :
Filed: May 31, 2006 :
Attorney Docket No. **P25035.00** :

DECISION ON PETITION
TO WITHDRAW
FROM RECORD

This is a decision on the Request to Withdraw as attorney or agent of record under 37 C.F.R. § 1.36(b), filed November 20, 2006.

The request is **NOT APPROVED.**

A grantable request to withdraw as attorney/agent of record must be signed by every attorney/agent seeking to withdraw or contain a clear indication that one attorney is signing on behalf of another/others. A request to withdraw will not be approved unless at least 30 (thirty) days would remain between the date of approval and the later of the expiration date of a time to file a response or the expiration date of the maximum time period which can be extended under 37 C.F.R. § 1.136(a).

The Office cannot approve the request at this time since the reasons provided do not meet any of the conditions under the mandatory or permissive categories enumerated in 37 CFR 10.40. Section 10.40 of Title 37 of the Code of Federal Regulation states, "[a] practitioner shall not withdraw from employment in a proceeding before the Office without permission from the Office[.]" More specifically, 37 CFR 10.40 states, "[i]f paragraph (b) of this section is not applicable, a practitioner may not request permission to withdraw in matter pending before the Office unless such request or such withdrawal is" for one the permissive reasons listed in 37 CFR 10.40(c). The reasons set forth in the request, the application was not attached to the correct correspondence address, does not meet any of the conditions set forth in 37 CFR 10.40.

All future communications from the Office will continue to be directed to the above-listed address until otherwise notified by applicant.

Telephone inquiries concerning this decision should be directed to Tredelle Jackson at 571-272- 2783.

Monica A. Graves
Petitions Examiner
Office of Petitions

UNITED STATES PATENT AND TRADEMARK OFFICE

Commissioner for Patents
United States Patent and Trademark Office
P.O. Box 1450
Alexandria, VA 22313-1450
www.uspto.gov

MAILED

APR 22 2010

OFFICE OF PETITIONS

SCHLUMBERGER OILFIELD SERVICES
200 GILLINGHAM LANE
MD 200-9
SUGAR LAND TX 77478

In re Application of	:	
Geoffrey Downton, et al.	:	
Application No. 11/421,147	:	ON PETITION
Filed: May 31, 2006	:	
Attorney Docket No. 92.1055	:	

This is a decision on the petition under the unintentional provisions of 37 CFR 1.137(b), filed February 3, 2010, to revive the above-identified application.

The petition is **GRANTED**.

The application became abandoned for failure to reply in a timely manner to the non-final Office action mailed, April 27, 2009 , which set a shortened statutory period for reply of three (3) months. No extensions of time under the provisions of 37 CFR 1.136(a) were obtained. Accordingly, the application became abandoned on July 28, 2009. The Notice of Abandonment was mailed December 3, 2009.

The petition satisfies the requirements of 37 CFR 1.137(b) in that petitioner has supplied (1) the reply in the form of a Request for Continued Examination (RCE) and fee of $810, and the submission required by 37 CFR 1.114; (2) the petition fee of $1,620; and (3) a proper statement of unintentional delay.

It is not apparent whether the person signing the statement of unintentional delay was in a position to have firsthand or direct knowledge of the facts and circumstances of the delay at issue. Nevertheless, such statement is being treated as having been made as the result of a reasonable inquiry into the facts and circumstances of such delay. See 37 CFR 10.18(b) and Changes to Patent Practice and Procedure; Final Rule Notice, 62 Fed. Reg. 53131, 53178 (October 10, 1997), 1203 Off. Gaz. Pat. Office 63, 103 (October 21, 1997). In the event that such an inquiry has not been made, petitioner must make such an inquiry. If such inquiry results in the discovery that it is not correct that the entire delay in filing the required reply from the due date for the reply until the filing of a grantable petition pursuant to 37 CFR 1.137(b) was unintentional, petitioner must notify the Office.

There is no indication that the person signing the petition was ever given a power of attorney to prosecute the application. If the person signing the petition desires to receive future correspondence regarding this application, the appropriate power of attorney document must be submitted. While a courtesy copy of this decision is being mailed to the person signing the petition, all future correspondence will be directed to the address currently of record until appropriate instructions are received.

An extension of time under 37 CFR 1.136 must be filed prior to the expiration of the maximum extendable period for reply. See In re Application of S., 8 USPQ2d 1630, 1631 (Comm'r Pats. 1988). Since the $1,110 extension of time fee submitted with the petition on February 3, 2010 was subsequent to the maximum extendable period for reply, this fee is unnecessary and will be credited to petitioner's deposit account.

Telephone inquiries concerning this decision should be directed to the undersigned at (571) 272-2991.

This application is being referred to Technology Center AU 3672 for processing of the RCE and for appropriate action by the Examiner in the normal course of business on the amendment submitted in accordance with 37 CFR 1.114.

Terri Johnson

Terri Johnson
Petitions Examiner
Office of Petitions

cc: **VINCENT LOCCISANO**
SCHLUMBERGER, STC
STROUDWANTER BUSINESS PARK
STONEHOUSE, GLOUSTERSHIRE, GL10 3SX
UNITED KINGDOM

UNITED STATES PATENT AND TRADEMARK OFFICE

UNITED STATES DEPARTMENT OF COMMERCE
United States Patent and Trademark Office
Address: COMMISSIONER FOR PATENTS
P.O. Box 1450
Alexandria, Virginia 22313-1450
www.uspto.gov

Polster, Lieder, Woodruff & Lucchesi, L.C.
12412 Powerscourt Dr. Suite 200
St. Louis, MO 63131-3615

Mail Date: 04/21/2010

Applicant	: Mark S. Shylanski	: DECISION ON REQUEST FOR
Patent Number	: 7583372	: RECALCULATION of PATENT
Issue Date	: 09/01/2009	: TERM ADJUSTMENT IN VIEW
Appliction No	: 11/421,181	: OF WYETH AND NOTICE OF INTENT TO
Filed	: 05/31/2006	: ISSUE CERTIFICATE OF CORRECTION
		:

The Request for Recalculation is **GRANTED** to the extent indicated.

The patent term adjustment has been determined to be **109** days. The USPTO will *sua sponte* issue a certificate of correction reflecting the amount of PTA days determined by the recalculation.

Prior to the issuance of the certificate of correction, the USPTO will afford patentee an opportunity to be heard and request reconsideration. Accordingly, patentee has **one month or thirty (30) days**, whichever is longer, to file a request for reconsideration of this patent term adjustment calculation. See 35 U.S.C. 154(b)(3)(B)(ii) and 37 CFR 1.322(a)(4). No extensions of time will be granted under 37 CFR 1.136.

Patentee should use document code PET.OP if electronically filing a request for reconsideration of this patent term adjustment calculation. The patentee must also include the information required by 37 CFR 1.705(b)(2) and the fee required by 37 CFR 1.18(e). If patentee does not file a timely request for reconsideration of this patent term adjustment calculation including the information required by 37 CFR 1.705(b)(2) and the fee required by 37 CFR 1.18(e), the USPTO will issue a certificate of correction reflecting the PTA determination noted above.

Patentee should be aware that in order to preserve the right to review in the United States District Court for the District of Columbia of the USPTO patent term adjustment determination, patentee must ensure that he or she also take the steps required under 35 U.S.C. 154(b)(4)(A) in a timely manner. Nothing in the request for recalculation should be construed as providing an alternative time frame for commencing a civil action under 35 U.S.C. 154(b)(4)(A).

Any questions concerning this decision should be directed to the Office of Patent Legal Administration at 571-272-7702.

UNITED STATES PATENT AND TRADEMARK OFFICE

Commissioner for Patents
United States Patent and Trademark Office
P.O. Box 1450
Alexandria, VA 22313-1450
www.uspto.gov

TOWNSEND AND TOWNSEND AND CREW, LLP
TWO EMBARCADERO CENTER
EIGHTH FLOOR
SAN FRANCISCO CA 94111-3834

MAILED

APR 27 2009

OFFICE OF PETITIONS

In re Application of	:	
HAUB, David R. et al.	:	
Application No. 11/421,200	:	DECISION ON PETITION
Filed: May 31, 2006	:	TO WITHDRAW
Attorney Docket No. **022263-001200US**	:	FROM RECORD
	:	

This is a decision on the Request to Withdraw as attorney or agent of record under 37 C.F.R. § 1.36(b), filed March 27, 2009.

The request is **APPROVED**.

A grantable request to withdraw as attorney/agent of record must be signed by every attorney/agent seeking to withdraw or contain a clear indication that one attorney is signing on behalf of another/others. The Office requires the practitioner(s) requesting withdrawal to certify that he, she, or they have: (1) given reasonable notice to the client, prior to the expiration of the response period, that the practitioner(s) intends to withdraw from employment; (2) delivered to the client or a duly authorized representative of the client all papers and property (including funds) to which the client is entitled; and (3) notified the client of any responses that may be due and the time frame within which the client must respond, pursuant 37 CFR 10.40(c).

The request was signed by Raymond B. Hom on behalf of all attorneys of record who are associated with customer No. 20350. All attorneys/agents associated have been withdrawn. Applicant is reminded that there is no attorney of record at this time.

The request to change the correspondence address of record is not acceptable as the requested correspondence address is not that of: (1) the first named signing inventor; or (2) an intervening assignee of the entire interest under 37 C.F.R 3.71. All future communications from the Office will be directed to the first named signing inventor.

There is an outstanding Office action mailed April 10, 2009 that requires a reply from the applicant.

Telephone inquiries concerning this decision should be directed to Michelle R. Eason at 571-272-4231.

Michelle R. Eason
Paralegal Specialist
Office of Petitions

cc: **DAVID R. HAUB**
13664 LINDAMERE LANE
SAN DIEGO, CA 92128

cc: **QUORUM SYSTEMS, INC.**
9330 SCRANTON ROAD
SUITE 450
SAN DIEGO, CA 92121

UNITED STATES PATENT AND TRADEMARK OFFICE

UNITED STATES DEPARTMENT OF COMMERCE
United States Patent and Trademark Office
Address: COMMISSIONER FOR PATENTS
P.O. Box 1450
Alexandria, Virginia 22313-1450
www.uspto.gov

DOV ROSENFELD
5507 COLLEGE AVE
SUITE 2
OAKLAND, CA 94618

Mail Date: 06/21/2010

Applicant	: John O'Sullivan	: DECISION ON REQUEST FOR
Patent Number	: 7636344	: RECALCULATION of PATENT
Issue Date	: 12/22/2009	: TERM ADJUSTMENT IN VIEW
Application No	: 11/421,204	: OF WYETH AND NOTICE OF INTENT TO
Filed	: 05/31/2006	: ISSUE CERTIFICATE OF CORRECTION
		:

The Request for Recalculation is **GRANTED** to the extent indicated.

The patent term adjustment has been determined to be **244** days. The USPTO will *sua sponte* issue a certificate of correction reflecting the amount of PTA days determined by the recalculation.

Prior to the issuance of the certificate of correction, the USPTO will afford patentee an opportunity to be heard and request reconsideration. Accordingly, patentee has **one month or thirty (30) days**, whichever is longer, to file a request for reconsideration of this patent term adjustment calculation. See 35 U.S.C. 154(b)(3)(B)(ii) and 37 CFR 1.322(a)(4). No extensions of time will be granted under 37 CFR 1.136.

Patentee should use document code PET.OP if electronically filing a request for reconsideration of this patent term adjustment calculation. The patentee must also include the information required by 37 CFR 1.705(b)(2) and the fee required by 37 CFR 1.18(e). If patentee does not file a timely request for reconsideration of this patent term adjustment calculation including the information required by 37 CFR 1.705(b)(2) and the fee required by 37 CFR 1.18(e), the USPTO will issue a certificate of correction reflecting the PTA determination noted above.

Patentee should be aware that in order to preserve the right to review in the United States District Court for the District of Columbia of the USPTO patent term adjustment determination, patentee must ensure that he or she also take the steps required under 35 U.S.C. 154(b)(4)(A) in a timely manner. Nothing in the request for recalculation should be construed as providing an alternative time frame for commencing a civil action under 35 U.S.C. 154(b)(4)(A).

Any questions concerning this decision should be directed to the Office of Patent Legal Administration at 571-272-7702.

UNITED STATES PATENT AND TRADEMARK OFFICE

Commissioner for Patents
United States Patent and Trademark Office
P.O. Box 1450
Alexandria, VA 22313-1450
www.uspto.gov

TOWNSEND AND TOWNSEND AND CREW, LLP
TWO EMBARCADERO CENTER, EIGHTH FLOOR
SAN FRANCISCO, CA 94111-3834

COPY MAILED

MAY 1 1 2009

OFFICE OF PETITIONS

In re Application of
David R. HAUB
Application No. 11/421,207
Filed: May 31, 2006
Attorney Docket No. **022263-001300US**

DECISION ON PETITION TO WITHDRAW FROM RECORD

This is a decision on the Request to Withdraw as attorney or agent of record under 37 C.F.R. § 1.36(b), filed March 27, 2009.

The request is **APPROVED**.

A grantable request to withdraw as attorney/agent of record must be signed by every attorney/agent seeking to withdraw or contain a clear indication that one attorney is signing on behalf of another/others..

The request was signed by Raymond B. Hom on behalf of all attorneys of record. All attorneys/agents associated have been withdrawn. *Applicant is reminded that there is no attorney of record at this time*.

The request to change the correspondence of record is not acceptable as the requested correspondence address as it is not that of: (1) the first named signing inventor; or (2) an intervening assignee of the entire interest under 37 C.F.R 3.71. All future communications from the Office will be directed to the assignee of the entire interest Spreadtrum Communications, Inc. at the first copied address below until otherwise properly notified by the applicant.

Telephone inquiries concerning this decision should be directed to the undersigned at 571-272-7253.

/Monica A. Graves/
Petitions Examiner, Office of Petitions

cc: **SPREADTRUM COMMUNICATIONS INC.**
P.O. BOX 309 – UGLAND HOUSE
BRITISH WEST INDIES
GEORGE TOWN, GRAND CAYMAN, CAYMAN ISLANDS

cc: **QUORUM SYSTEMS, INC.**
9330 SCRANTON ROAD, SUITE 450
SAN DIEGO, CA 92121

Attachment: Power/Revocation/New Power Of Attorney with Address Change (PTO/SB/81)

UNITED STATES PATENT AND TRADEMARK OFFICE

Commissioner for Patents
United States Patent and Trademark Office
P.O. Box 1450
Alexandria, VA 22313-1450
www.uspto.gov

HUSCH BLACKWELL SANDERS LLP
1620 Dodge Street
Suite 2100
Omaha, NE 68102

MAILED

APR 13 2009

OFFICE OF PETITIONS

In re Application of	:	
Jonathan M. Nelson	:	
Application No. 11/421,215	:	DECISION ON PETITION
Filed: May 31, 2006	:	TO WITHDRAW
Attorney Docket No. 57979.2	:	FROM RECORD
	:	

This is a decision on the Request to Withdraw as attorney or agent of record under 37 C.F.R. § 1.36(b), filed February 16, 2009.

The request is **APPROVED**.

A grantable request to withdraw as attorney/agent of record must be signed by every attorney/agent seeking to withdraw or contain a clear indication that one attorney is signing on behalf of another/others. A request to withdraw will not be approved unless at least 30 (thirty) days would remain between the date of approval and the later of the expiration date of a time to file a response or the expiration date of the maximum time period which can be extended under 37 C.F.R. § 1.136(a).

The request was signed by David H. Milligan on behalf of all attorneys of record. All attorneys/agents have been withdrawn. Applicant is reminded that there is no attorney of record at this time.

All future correspondence will be directed to the first named inventor Jonathan Nelson at the address indicated below.

Telephone inquiries concerning this decision should be directed to Terri Williams at 571-272-2991.

Terri Williams
Terri Williams
Petitions Examiner
Office of Petitions

cc: **Jonathan M. Nelson**
758 South 16th, Apt. #283
Blair, NE 68008

UNITED STATES PATENT AND TRADEMARK OFFICE

UNITED STATES DEPARTMENT OF COMMERCE
United States Patent and Trademark Office
Address: COMMISSIONER FOR PATENTS
P.O. Box 1450
Alexandria, Virginia 22313-1450
www.uspto.gov

APPLICATION NUMBER	FILING OR 371(C) DATE	FIRST NAMED APPLICANT	ATTY. DOCKET NO./TITLE
11/421,215	05/31/2006	Jonathan M. Nelson	57979.2

CONFIRMATION NO. 2257

POWER OF ATTORNEY NOTICE

61270
HUSCH BLACKWELL SANDERS LLP
1620 DODGE STREET
SUITE 2100
OMAHA, NE 68102

OC000000035456834

Date Mailed: 04/13/2009

NOTICE REGARDING CHANGE OF POWER OF ATTORNEY

This is in response to the Power of Attorney filed 02/16/2009.

- The withdrawal as attorney in this application has been accepted. Future correspondence will be mailed to the new address of record. 37 CFR 1.33.

/tswilliams/

Office of Data Management, Application Assistance Unit (571) 272-4000, or (571) 272-4200, or 1-888-786-0101

UNITED STATES PATENT AND TRADEMARK OFFICE

Commissioner for Patents
United States Patent and Trademark Office
P.O. Box 1450
Alexandria, VA 22313-1450
www.uspto.gov

DUANE MORRIS LLP
IP DEPARTMENT
30 SOUTH 17TH STREET
PHILADELPHIA PA 19103-4196

COPY MAILED

DEC 18 2006

OFFICE OF PETITIONS

In re Application of
WERT
Application No. 11/421,235
Filed: May 31, 2006
Attorney Docket No. H1799-00326

DECISION ON PETITION
TO WITHDRAW
FROM RECORD

This is a decision on the Request to Withdraw as attorney or agent of record under 37 C.F.R. § 1.36(b), filed October 3, 2006.

The request is **NOT APPROVED**.

A grantable request to withdraw as attorney/agent of record must be signed by every attorney/agent seeking to withdraw or contain a clear indication that one attorney is signing on behalf of another/others. A request to withdraw will not be approved unless at least 30 (thirty) days would remain between the date of approval and the later of the expiration date of a time to file a response or the expiration date of the maximum time period which can be extended under 37 C.F.R. § 1.136(a).

The Office cannot approve the request at this time since the reasons provided do not meet any of the conditions under the mandatory or permissive categories enumerated in 37 CFR 10.40. Section 10.40 of Title 37 of the Code of Federal Regulation states, "[a] practitioner shall not withdraw from employment in a proceeding before the Office without permission from the Office[.]" More specifically, 37 CFR 10.40 states, "[i]f paragraph (b) of this section is not applicable, a practitioner may not request permission to withdraw in matter pending before the Office unless such request or such withdrawal is" for one the permissive reasons listed in 37 CFR 10.40(c). The reasons set forth in the request, "assignee of record has requested file be transferred", does not meet any of the conditions set forth in 37 CFR 10.40.

In order to request or take action in a patent matter, the assignee must establish its ownership of the patent to the satisfaction of the Director. In this regard, a Statement under 37 CFR 3.73(b) must have either: (i) documentary evidence of **a chain of title from the original owner to the assignee** (*e.g.*, copy of an executed assignment), and a statement affirming that the documentary evidence of the chain of title from the original owner to the assignee was or concurrently is being

submitted for recordation pursuant to § 3.11; or (ii) a statement specifying where documentary evidence of a chain of title from the original owner to the assignee is recorded in the assignment records of the Office (*e.g.*, **reel and frame number**).

All future communications from the Office will continue to be directed to the above-listed address until otherwise notified by applicant.

Telephone inquiries concerning this decision should be directed to the undersigned at 571-272-7253.

Monica A. Graves
Petitions Examiner
Office of Petitions

cc: **CHRISTOPHER B. AUSTIN**
MICHAEL BEST & FRIEDRICH LLP
100 E. WISCONSIN AVENUE, SUITE 3300
MILWAUKEE, WI 53202

UNITED STATES PATENT AND TRADEMARK OFFICE

UNITED STATES DEPARTMENT OF COMMERCE
United States Patent and Trademark Office
Address: COMMISSIONER FOR PATENTS
P.O. Box 1450
Alexandria, Virginia 22313-1450
www.uspto.gov

BAKER BOTTS L.L.P.
2001 ROSS AVENUE
SUITE 600
DALLAS, TX 75201-2980

Mail Date: 04/20/2010

Applicant	: Jian Hong Jiang	: DECISION ON REQUEST FOR
Patent Number	: 7576567	: RECALCULATION of PATENT
Issue Date	: 08/18/2009	: TERM ADJUSTMENT IN VIEW
Appliction No	: 11/421,239	: OF WYETH AND NOTICE OF INTENT TO
Filed	: 05/31/2006	: ISSUE CERTIFICATE OF CORRECTION
		:

The Request for Recalculation is **GRANTED** to the extent indicated.

The patent term adjustment has been determined to be **23** days. The USPTO will *sua sponte* issue a certificate of correction reflecting the amount of PTA days determined by the recalculation.

Prior to the issuance of the certificate of correction, the USPTO will afford patentee an opportunity to be heard and request reconsideration. Accordingly, patentee has **one month or thirty (30) days**, whichever is longer, to file a request for reconsideration of this patent term adjustment calculation. See 35 U.S.C. 154(b)(3)(B)(ii) and 37 CFR 1.322(a)(4). No extensions of time will be granted under 37 CFR 1.136.

Patentee should use document code PET.OP if electronically filing a request for reconsideration of this patent term adjustment calculation. The patentee must also include the information required by 37 CFR 1.705(b)(2) and the fee required by 37 CFR 1.18(e). If patentee does not file a timely request for reconsideration of this patent term adjustment calculation including the information required by 37 CFR 1.705(b)(2) and the fee required by 37 CFR 1.18(e), the USPTO will issue a certificate of correction reflecting the PTA determination noted above.

Patentee should be aware that in order to preserve the right to review in the United States District Court for the District of Columbia of the USPTO patent term adjustment determination, patentee must ensure that he or she also take the steps required under 35 U.S.C. 154(b)(4)(A) in a timely manner. Nothing in the request for recalculation should be construed as providing an alternative time frame for commencing a civil action under 35 U.S.C. 154(b)(4)(A).

Any questions concerning this decision should be directed to the Office of Patent Legal Administration at 571-272-7702.

UNITED STATES PATENT AND TRADEMARK OFFICE

COMMISSIONER FOR PATENTS
UNITED STATES PATENT AND TRADEMARK OFFICE
P.O. BOX 1450
ALEXANDRIA, VA 22313-1450
www.uspto.gov

MOTOROLA INC
600 NORTH US HIGHWAY 45
W4 - 39Q
LIBERTYVILLE IL 60048-5343

MAILED
JUN 08 2010
OFFICE OF PETITIONS

In re Application of :
Black, et al. :
Application No. 11/421,245 :
Filed: May 31, 2006 :
Attorney Docket No. CS23369RLD01 :

ON PETITION

This is a decision on the petition under the unintentional provisions of 37 CFR 1.137(b), filed March 8, 2010, to revive the above-identified application.

The petition is **DISMISSED**.

Any request for reconsideration of this decision must be submitted within TWO (2) MONTHS from the mail date of this decision. Extensions of time under 37 CFR 1.136(a) are permitted. The reconsideration request should include a cover letter entitled "Renewed Petition under 37 CFR 1.137(b)." This is **not** a final agency action within the meaning of 5 U.S.C. § 704.

The application became abandoned February 13, 2010 for failure to timely the issue fee and publication fee as required by the Notice of Allowance and Issue Fee Due (Notice) mailed November 12, 2009. The Notice set a three month statutory period of time for reply. Notice of Abandonment was mailed March 1, 2010.

A grantable petition under 37 CFR 1.137(b) must be accompanied by: (1) the required reply, unless previously filed; (2) the petition fee as set forth in 37 CFR 1.17(m); (3) a statement that the entire delay in filing the required reply from the due date for the reply until the filing of a grantable petition pursuant to 37 CFR 1.137(b) was unintentional; and (4) any terminal disclaimer (and fee as set forth in 37 CFR 1.20(d)) required by 37 CFR 1.137(d). Where there is a question as to whether either the abandonment or the delay in filing a petition under 37 CFR 1.137 was unintentional, the Director may require additional information. See MPEP 711.03(c)(II)(C) and (D).

The instant petition lacks item (1) set forth above. While petitioners have submitted a request for continued examination (RCE) and submission (information disclosure statement), petitioners are advised that in an application abandoned for failure to pay the issue fee or any portion thereof, the required reply must include payment of the issue fee or any outstanding balance. In an application, abandoned for failure to pay the publication fee, the required reply must include payment of the publication fee. See, MPEP 711.03(c), 35 USC 41(a)(7).

Accordingly, any request for reconsideration of the petition to revive must include payment of the current issue fee and publication fee. Petitioners may **not** obtain a refund of the issue fee or the publication fee. If, however, the application is subsequently allowed, the new Notice of Allowance will reflect an issue fee and publication fee amounts that are due that is the difference between the current issue fee and publication fee amounts and the issue fee and publication fee that were previously paid; absent notice to this effect in the new Notice of Allowance, petitioner may request in writing to have the previously paid issue fee and publication fee re-applied to the fees then due.

Further correspondence with respect to this matter should be addressed as follows:

By Mail: Mail Stop PETITION
Commissioner for Patents
P. O. Box 1450
Alexandria, VA 22313-1450

By hand: U. S. Patent and Trademark Office
Customer Service Window, Mail Stop Petitions
Randolph Building
401 Dulany Street
Alexandria, VA 22314

The centralized facsimile number is **(571) 273-8300.**

Telephone inquiries concerning this decision should be directed to the undersigned at (571) 272-3205.

/ALESIA M. BROWN/

Alesia M. Brown
Petitions Attorney
Office of Petitions

UNITED STATES PATENT AND TRADEMARK OFFICE

UNITED STATES DEPARTMENT OF COMMERCE
United States Patent and Trademark Office
Address: COMMISSIONER FOR PATENTS
P.O. Box 1450
Alexandria, Virginia 22313-1450
www.uspto.gov

BAKER BOTTS L.L.P.
2001 ROSS AVENUE
SUITE 600
DALLAS, TX 75201-2980

Mail Date: 04/20/2010

Applicant	: Jian Hong Jiang	: DECISION ON REQUEST FOR
Patent Number	: 7579872	: RECALCULATION of PATENT
Issue Date	: 08/25/2009	: TERM ADJUSTMENT IN VIEW
Appliction No	: 11/421,256	: OF WYETH AND NOTICE OF INTENT TO
Filed	: 05/31/2006	: ISSUE CERTIFICATE OF CORRECTION
		:

The Request for Recalculation is **GRANTED** to the extent indicated.

The patent term adjustment has been determined to be **0** days. The USPTO will *sua sponte* issue a certificate of correction reflecting the amount of PTA days determined by the recalculation.

Prior to the issuance of the certificate of correction, the USPTO will afford patentee an opportunity to be heard and request reconsideration. Accordingly, patentee has **one month or thirty (30) days**, whichever is longer, to file a request for reconsideration of this patent term adjustment calculation. See 35 U.S.C. 154(b)(3)(B)(ii) and 37 CFR 1.322(a)(4). No extensions of time will be granted under 37 CFR 1.136.

Patentee should use document code PET.OP if electronically filing a request for reconsideration of this patent term adjustment calculation. The patentee must also include the information required by 37 CFR 1.705(b)(2) and the fee required by 37 CFR 1.18(e). If patentee does not file a timely request for reconsideration of this patent term adjustment calculation including the information required by 37 CFR 1.705(b)(2) and the fee required by 37 CFR 1.18(e), the USPTO will issue a certificate of correction reflecting the PTA determination noted above.

Patentee should be aware that in order to preserve the right to review in the United States District Court for the District of Columbia of the USPTO patent term adjustment determination, patentee must ensure that he or she also take the steps required under 35 U.S.C. 154(b)(4)(A) in a timely manner. Nothing in the request for recalculation should be construed as providing an alternative time frame for commencing a civil action under 35 U.S.C. 154(b)(4)(A).

Any questions concerning this decision should be directed to the Office of Patent Legal Administration at 571-272-7702.

UNITED STATES PATENT AND TRADEMARK OFFICE

Commissioner for Patents
United States Patent and Trademark Office
P.O. Box 1450
Alexandria, VA 22313-1450
www.uspto.gov

TIM COOK
P.O. BOX 10107
LIBERTY TX 77575

COPY MAILED

AUG 0 4 2006

OFFICE OF PETITIONS

In re Application of	:	
Van Winkle, Denzal Wayne	:	
Application No. 11/421,258	:	DECISION ON PETITION
Filed: May 31, 2006	:	TO MAKE SPECIAL UNDER
Attorney Docket No. VANW.02	:	37 CFR 1.102(c)(1)
	:	

This is a decision on the petition under 37 CFR 1.102(c)(1), filed May 31, 2006, to make the above-identified application special based on applicant's age as set forth in M.P.E.P. § 708.02, Section IV.

The petition is **GRANTED**.

A grantable petition to make an application special under 37 CFR 1.102(c)(1) and MPEP § 708.02, Section IV: Applicant's Age, must be accompanied by evidence showing that at least one of the applicants is 65 years of age, or more, such as a birth certificate or a statement by applicant. No fee is required.

The instant petition includes a copy of the applicant's driver's license. Accordingly, the above-identified application has been accorded "special" status.

Telephone inquiries concerning this decision should be directed to the undersigned at 571-272-3206. All other inquiries concerning either the examination or status of the application should be directed to the Technology Center.

This matter is being referred to the Technology Center Art Unit 3677 for action on the merits commensurate with this decision.

Liana Chase
Petitions Examiner
Office of Petitions

UNITED STATES PATENT AND TRADEMARK OFFICE

UNITED STATES DEPARTMENT OF COMMERCE
United States Patent and Trademark Office
Address: COMMISSIONER FOR PATENTS
P.O. Box 1450
Alexandria, Virginia 22313-1450
www.uspto.gov

APPLICATION NO.	FILING DATE	FIRST NAMED INVENTOR	ATTORNEY DOCKET NO.	CONFIRMATION NO.
11/421,262	05/31/2006	Fabrice Dieudonat	007034.00019	2321

7590 03/24/2008
BANNER & WITCOFF, LTD.
TEN SOUTH WACKER DRIVE
SUITE 3000
CHICAGO, IL 60606

EXAMINER	

ART UNIT	PAPER NUMBER
3728	

MAIL DATE	DELIVERY MODE
03/24/2008	PAPER

DECISION GRANTING PETITION UNDER 37 CFR 1.138(d)

The declaration of express abandonment is recognized

This is in response to the petition under 37 CFR 1.138(d), requesting for a refund of any previously paid search fee and excess claims fee in the above-identified application.

The petition is granted.

The express abandonment is recognized. Any previously paid search fee and excess claims fee are hereby refunded.

Telephone inquiries should be directed to the Office of Data Management at (571) 272-4200.

Nimi Farmer

Patent Publication Branch
Office of Data Management

```
Adjustment date: 03/25/2008  KKING1
07712/2006 INTEFSW  00000169 190733   11421262
02 FC:1111        500.00 CR
04 FC:1202        600.00 CR
```


FORM PET651G (Rev. 08/07)

UNITED STATES PATENT AND TRADEMARK OFFICE

Commissioner for Patents
United States Patent and Trademark Office
P.O. Box 1450
Alexandria, VA 22313-1450
www.uspto.gov

IBM CORPORATION (JSS)
C/O SCHUBERT OSTERRIEDER & NICKELSON PLLC
6013 CANNON MOUNTAIN DRIVE, S14
AUSTIN TX 78749

COPY MAILED

MAR 18 2008

OFFICE OF PETITIONS

In re Application of
Christopher J. Dawson
Application No. 11/421,279
Filed: May 31, 2006
Attorney Docket No.
AUS920060144US1(4177)

ON PETITION

This is a decision on the petition under 37 CFR 1.137(b)[1], filed January 22, 2008, to revive the above-identified application.

The petition is **GRANTED**.

This application became abandoned for failure to timely reply to the Final Office Action mailed June 19, 2007. A response was filed December 12, 2007 with a three month extension of time request, but by Advisory Action of December 17, 2007, petitioner was advised that the response did not place the application in condition for allowance. Accordingly, a Notice of Abandonment was mailed January 29, 2007 after the instant petition was filed.

Petitioner has submitted a Request for Continued Examination (RCE) with a request that the previously filed amendment be accepted as the submission required under 37 CFR 1.114.

This matter is being referred to Technology Center 2863 for processing of the RCE.

Telephone inquiries related to this decision should be directed to the undersigned Petitions Attorney at (571) 272-3212.

Patricia Faison-Ball
Senior Petitions Attorney
Office of Petitions

---

[1]Effective December 1, 1997, the provisions of 37 CFR 1.137(b) now provide that where the delay in reply was unintentional, a petition may be filed to revive an abandoned application or a lapsed patent pursuant to 37 CFR 1.137(b). A grantable petition filed under the provisions of 37 CFR 1.137(b) must be accompanied by:

(1) the required reply, unless previously filed. In a nonprovisional application abandoned for failure to prosecute, the required reply may be met by the filing of a continuing application. In an application or patent, abandoned or lapsed for failure to pay the issue fee or any portion thereof, the required reply must be the payment of the issue fee or any outstanding balance thereof.

(2) the petition fee as set forth in 37 CFR 1.17(m);

(3) a statement that the entire delay in filing the required reply from the due date for the reply until the filing of a grantable petition pursuant to 37 CFR 1.137(b) was unintentional. The Commissioner may required additional information where there is a question whether the delay was unintentional; and

(4) any terminal disclaimer (and fee as set forth in 37 CFR 1.20(d)) required pursuant to 37 CFR 1.137(c)).

UNITED STATES PATENT AND TRADEMARK OFFICE

Commissioner for Patents
United States Patent and Trademark Office
P.O. Box 1450
Alexandria, VA 22313-1450
www.uspto.gov

Paper No.

MAILED

APR 07 2010

OFFICE OF PETITIONS

HARRITY & HARRITY, LLP
11350 RANDOM HILLS ROAD
SUITE 600
FAIRFAX VA 22030

In re Application of	:	
Peter Alexander Nilsson	:	
Application No. 11/421,289	:	ON APPLICATION FOR
Filed: 05/31/2006	:	PATENT TERM ADJUSTMENT
Atty Docket No.	:	
PS06 0204US1	:	

This is in response to the "REQUEST FOR RECONSIDERATION OF PATENT TERM ADJUSTMENT," filed on January 21, 2010, which is treated as a request for reconsideration under 37 CFR 1.705(b). Applicants submit that the correct patent term adjustment to be indicated on the patent is at least 516 days, not 372 days as calculated by the Office as of the mailing of the initial determination of patent term adjustment. Applicants request this correction solely on the basis that the Office will take in excess of three years to issue this patent.

The instant application for patent term adjustment requests reconsideration of the patent term adjustment as it relates to the Office's failure to issue the patent within 3 years of the filing date, the application for patent term adjustment under 37 CFR 1.705(b) is **DISMISSED as PREMATURE**.

Knowledge of the actual date the patent issues is required to calculate the amount, if any, of additional patent term patentee is entitled to for Office failure to issue the patent within 3 years. See § 1.702(b). The computer will not undertake the § 1.702(b) calculation until the actual date of issuance of the patent has been determined. Likewise, the computer will not calculate any further Office delay under § 1.702(a)(4) or applicant delay under § 1.704(c)(10) until the actual date of issuance of the patent has been determined. As such, the Office can not make a determination on the correctness of the patent term adjustment until the patent has issued.

Requesting reconsideration of the patent term adjustment to be indicated on the patent under 37 CFR 1.705(b) based on the initial determination of patent term adjustment and a projected issuance date of the patent is premature. Accordingly, it is appropriate to dismiss as premature such a request.

Rather than file an application for patent term adjustment under 37 CFR 1.705(b) contesting the 37 CFR 1.702(b) calculation at the time of the mailing of the notice of allowance, applicant is advised that they may wait until the time of the issuance of the patent and file a request for reconsideration of the patent term adjustment pursuant to 37 CFR 1.705(d). As the USPTO does not calculate the amount of time earned pursuant to 37 CFR 1.702(b) until the time of the issuance of the patent, the Office will consider any request for reconsideration of the patent term adjustment due to an error in the calculation of 37 CFR 1.702(b) to be timely if the request for reconsideration is filed within two months of the issuance of the patent. However, as to all other bases for contesting the initial determination of patent term adjustment received with the notice of allowance, applicant must timely file an application for patent term adjustment prior to the payment of the issue fee[1].

The Office acknowledges submission of the $200.00 fee set forth in 37 CFR 1.18(e) for consideration of the application for patent term adjustment under 37 CFR 1.705(b).

Any request for reconsideration of the patent term adjustment indicated on the patent must be timely filed within 2 months after issuance pursuant to 37 CFR 1.705(d) and must include payment of the required fee under 37 CFR 1.18(e).

---

1 For example, if applicant disputes both the calculation of patent term adjustment under 37 CFR 1.702(a)(1) for Office failure to mail a first Office action or notice of allowance not later than fourteen months after the date on which the application was filed and under 37 CFR 1.702(b) for Office failure to issue a patent within three years of the actual filing date of the application, then applicant must still timely file an application for patent term adjustment prior to the payment of the issue fee to contest the calculation of Office delay in issuing a first Office action or notice of allowance. See 37 CFR 1.705(b) and 35 U.S.C. 154(b)(3)(B). A dispute as to the calculation of the §1.702(a)(1) period raised on request for reconsideration of patent term adjustment under 37 CFR 1.705(d) will be dismissed as untimely filed.

The Office of Data Management has been advised of this decision. This application is being referred to the Office of Data Management for issuance of the patent.

Telephone inquiries specific to this decision should be directed to the undersigned at (571) 272-3231.

D Wood

Douglas I. Wood
Senior Petitions Attorney
Office of Petitions

UNITED STATES PATENT AND TRADEMARK OFFICE

Commissioner for Patents
United States Patent and Trademark Office
P.O. Box 1450
Alexandria, VA 22313-1450
www.uspto.gov

PATTERSON & SHERIDAN, LLP
3040 POST OAK BOULEVARD, SUITE 1500
HOUSTON TX 77056

COPY MAILED

NOV 30 2006

OFFICE OF PETITIONS
ON PETITION

In re Application of	:
Craig R. Metzner et al	:
Application No. 11/421,293	:
Filed: May 31, 2006	:
Attorney Docket No.	:
APPM/007555C1/FEP/GCM/AG	:

This is a decision on the paper entitled, "PETITION TO WITHDRAW NOTICE TO FILE MISSING PARTS OF NONPROVISIONAL APPLICATION," filed July 19, 2006.

The petition is **granted.**

A Notice To File Missing Parts Of Nonprovisional Application (Notice) was mailed on June 7, 2006. The notice states that the statutory basic filing fee is missing. However, a review of the file record discloses that the fee transmittal sheet filed with the application papers on May 31, 2006 is listed incorrectly as "Miscellaneous Incoming Letter," on the Electronic Acknowledgement Receipt issued by the USPTO upon filing of the above application, as well as in IFW and Private PAIR. Therefore, the required fees were not charged to applicants deposit account as authorized.

In view thereof, the notice mailed June 7, 2006 was mailed in error and is hereby **vacated.**

Inquiries concerning this decision may be directed to the undersigned at (571) 272-3208.

This matter is being referred to the Office of Initial Patent Examination for preexamination processing.

Karen Creasy

Karen Creasy
Petitions Examiner
Office of Petitions

UNITED STATES PATENT AND TRADEMARK OFFICE

COMMISSIONER FOR PATENTS
UNITED STATES PATENT AND TRADEMARK OFFICE
P.O. BOX 1450
ALEXANDRIA, VA 22313-1450
www.uspto.gov

COPY MAILED

SEP 21 2007

OFFICE OF PETITIONS

HONEYWELL INTERNATIONAL INC.
PATENT SERVICES AB-2B
101 COLUMBIA ROAD
P.O. BOX 2245
MORRISTOWN NJ 07962-2245

In re Application of McGlone, et al. Application No. 11/421,391 Filed: May 31, 2006 Atty. Dkt. No.: H0010494 (HOOO-1-1177) For: WEARABLE MARINE HEADS-UP DISPLAY SYSTEM	DECISION REFUSING STATUS UNDER 37 CFR 1.47(a)

This decision is in response to the petition under 37 CFR 1.47(a) filed October 27, 2006.

The petition under 37 CFR 1.47(a) is **DISMISSED**.

Petitioners are given TWO MONTHS from the mailing date of this decision to reply, correcting the below-noted deficiencies. Any reply should be entitled "Request for Reconsideration of Petition Under 37 CFR 1.47(a)," and should only address the deficiencies noted herein. The reply under 37 CFR 1.47(a) may include an oath or declaration executed by the non-signing inventors. Any extensions of time will be governed by 37 CFR 1.136(a).

The above-identified application was filed May 31, 2006 without an executed oath or declaration. Accordingly, a Notice to File Missing Parts of Nonprovisional Application (Notice) was mailed June 29, 2006. The Notice required, *inter alia*, a surcharge and an executed oath or declaration.

The documents received October 27, 2006 included a declaration under 37 CFR 1.63 and a declaration of facts Robynn Burk. An actual petition was not received. Accordingly, prior to a decision on the merits, a proper petition under 37 CFR(a) must be submitted.

Moreover, the required petition fee of $200.00 has not been received. Submission of the petition fee is a prerequisite prior to treatment on the merits of any petition submitted under 37 CFR 1.47.

Further correspondence with respect to this matter should be addressed as follows:

By mail: Mail Stop Petition
Commissioner for Patents
P.O. Box 1450
Alexandria, VA 22313-1450

By facsimile: (571) 273-8300

By hand: U.S. U.S. Patent and Trademark Office
Customer Service Window
Mail Stop Petition
Randolph Building
401 Dulaney Street
Alexandria, VA 22314

Telephone inquiries related to this decision may be directed to the undersigned at (571) 272-3205.

Alesia M. Brown
Petitions Attorney
Office of Petitions

UNITED STATES PATENT AND TRADEMARK OFFICE

Commissioner for Patents
United States Patent and Trademark Office
P.O. Box 1450
Alexandria, VA 22313-1450
www.uspto.gov

HONEYWELL INTERNATIONAL INC.
PATENT SERVICES AB-2B
101 COLUMBIA ROAD
P.O. BOX 2245
MORRISTOWN NJ 07962-2245

COPY MAILED

DEC 17 2007

OFFICE OF PETITIONS

In re Application of McGlone, et al. Application No. 11/421,391 Filed: May 31, 2006 Atty. Dkt. No.: H0010494 (HOOO-1-1177) For: WEARABLE MARINE HEADS-UP DISPLAY SYSTEM	DECISION REFUSING STATUS UNDER 37 CFR 1.47(a)

This decision is in response to the renewed petition under 37 CFR 1.47(a) filed November 19, 2007.

The petition under 37 CFR 1.47(a) is **DISMISSED**.

Petitioners are given TWO MONTHS from the mailing date of this decision to reply, correcting the below-noted deficiencies. Any reply should be entitled "Request for Reconsideration of Petition Under 37 CFR 1.47(a)," and should only address the deficiencies noted herein. The reply under 37 CFR 1.47(a) may include an oath or declaration executed by the non-signing inventors. Any extensions of time will be governed by 37 CFR 1.136(a).

The above-identified application was filed May 31, 2006 without an executed oath or declaration. Accordingly, a Notice to File Missing Parts of Nonprovisional Application (Notice) was mailed June 29, 2006. The Notice required, *inter alia*, a surcharge and an executed oath or declaration.

A grantable petition under 37 CFR 1.47(a) requires: (1) proof that the non-signing inventor cannot be reached or refuses to sign the oath or declaration after having been presented with the application papers (specification, claims and drawings); (2) an acceptable oath or declaration in compliance with 35 U.S.C. §§ 115 and 116; (3) the petition fee; and (4) a statement of the last known address of the non-signing inventor.

The instant petition fails to satisfy requirements (1) and (4) set forth above.

As to item (1), petitioners have failed to establish that the non-signing inventor received a complete copy of the application papers (specification, including claims, drawings, and oath or declaration) and thereafter refused to execute an oath or declaration, or, that the non-signing inventor cannot be reached or located for presentation of the application papers.

The declaration of Robynn Burk indicates that attempts to communication with the non-signing inventor via email were unsuccessful. Declarant further states "Human Resources," presumably for Honeywell International Inc., did not have a last known address for the non-signing inventor.

To the extent that petitioners allege the non-signing inventor has refused to execute the oath or declaration, petitioners are reminded that before a refusal to sign an oath or declaration can be alleged, it must be demonstrated that a *bona fide* effort has been made to present a complete copy of the application papers (specification, including claims, drawings, and oath or declaration) to the non-signing inventor at the non-signing inventor's last known address, typically a residential address.

Any renewed petition should be accompanied by evidence to establish that the non-signing inventor was sent a complete copy of the application papers (specification, claims, drawings, and oath or declaration) and thereafter refused to execute the declaration. Petitioners may wish to provide the Office copies of letters sent to the inventor indicating the enclosure of the application papers (specification, claims, drawings, and oath or declaration). If after the inventor receives the application papers and requests to execute the oath or declaration are refused, these facts should be set forth in a statement of facts signed by the person to whom the refusals were made and detailing with specificity the exact manner of the refusals. If a written refusal has been made, a copy of the written refusal should be included on renewed petition.

To the extent that petitioners allege the non-signing inventor cannot be reached or located, petitioners are reminded that where inability to reach or locate a non-signing inventor is alleged, petitioners are required to establish that diligent effort was made to locate the non-signing inventor and provide the non-signing inventor with a complete copy of the patent application (specification, including claims, drawings, and oath or declaration). Petitioners have not established that diligent effort has been made to locate the non-signing inventor for presentation of the application papers.

Any renewed petition must be supported by evidence that sufficiently establishes that despite diligent effort, the non-signing inventor cannot be located. A statement of facts should be submitted that fully describes the exact facts that are relied on to establish that a *diligent effort* was made to locate the non-signing inventor. The statement of facts must be signed, where at all possible, by a person having *firsthand knowledge* of the facts recited therein. Statements based on hearsay, will not normally be accepted. At the very least, a search of the internet, human resource records, telephone directories, etc. should be undertaken in regions where it is suspected the non-signing inventor may reside. Petitioners should reference and supply evidence of any such searches in a renewed petition. *See*, MPEP 409.03(d).

As to item (4), the last known address of the non-signing inventor has not been provided.

An application filed pursuant to 37 CFR 1.47 must state the last known address of the non-signing inventor. That address should be the last known address at which the inventor customarily receives mail. Ordinarily, the last known address will be the last known residence of the non-signing inventor. Inasmuch as a non-signing inventor is notified that an application pursuant to 37 CFR 1.47 has been filed on his or her behalf, other addresses at which the non-signing inventor may be reached should also be given. Each applicant's mailing or post office address is required to be supplied on the oath or declaration, if not stated in an application data sheet. Applicant's mailing address means that address at which he or she customarily receives his or her mail. Either applicant's home or business address is acceptable as the mailing address. The mailing address should include the ZIP Code designation. The object of requiring each applicant's mailing address is to enable the Office to communicate directly with the applicant if desired; hence, the address of the attorney with instruction to send communications to applicant in care of the attorney is not sufficient. In situations where an inventor does not execute the oath or declaration and the inventor is not deceased, such as in an application filed under 37 CFR 1.47, the inventor's most recent home address must be given to enable the Office to communicate directly with the inventor as necessary. *See* MPEP §§ 409.03(e) and 605.03.

There is no indication that the person signing the petition was ever given a power of attorney to prosecute the application. If the person signing the petition desires to receive future correspondence regarding this application, the appropriate power of attorney documents must be submitted. While a courtesy copy

of this decision is being mailed to the person signing the petition, all future correspondence will be directed to the address currently of record until appropriate instructions are received.

Further correspondence with respect to this matter should be addressed as follows:

By mail:	Mail Stop Petition Commissioner for Patents P.O. Box 1450 Alexandria, VA 22313-1450
By facsimile:	(571) 273-8300
By hand:	U.S. Patent and Trademark Office Customer Service Window Mail Stop Petition Randolph Building 401 Dulaney Street Alexandria, VA 22314

Telephone inquiries related to this decision may be directed to the undersigned at (571) 272-3205.

Alesia M. Brown
Petitions Attorney
Office of Petitions

CC: MARK LORBIECKI
Black Lowe & Graham, PLLC
701 Fifth Avenue, Suite 4800
Seattle, WA 98104

UNITED STATES PATENT AND TRADEMARK OFFICE

COMMISSIONER FOR PATENTS
UNITED STATES PATENT AND TRADEMARK OFFICE
P.O. BOX 1450
ALEXANDRIA, VA 22313-1450
www.uspto.gov

HONEYWELL INTERNATIONAL INC.
PATENT SERVICES AB-2B
101 COLUMBIA ROAD
P.O. BOX 2245
MORRISTOWN NJ 07962-2245

COPY MAILED

JUN 16 2008

OFFICE OF PETITIONS

In re Application of	:
McGlone, et al.	: DECISION NOTING JOINDER
Application No. 11/421,391	: OF INVENTOR AND PETITION
Filed: May 31, 2006	: UNDER 37 CFR 1.47(a) MOOT
Docket No.: H0010494 (HOOO-1-1177)	:

This is a decision on the petition renewed under 37 CFR 1.47(a), filed May 19, 2008.

In view of the joinder of the inventor, further consideration under 37 CFR 1.47(a) is not necessary and the petition is considered to be moot. This application does not have any Rule 1.47(a) status and no such status should appear on the file wrapper. This application need not be returned to this Office for further consideration under 37 CFR 1.47(a).

This application is being forwarded to the Office of Initial Patent Examination for further processing

Telephone inquiries concerning this matter may be directed to the undersigned at (571) 272-3205.

Alesia M. Brown
Petitions Attorney
Office of Petitions

UNITED STATES PATENT AND TRADEMARK OFFICE

Commissioner for Patents
United States Patent and Trademark Office
P.O. Box 1450
Alexandria, VA 22313-1450
www.uspto.gov

LAW OFFICE OF PHILIP A STEINER
1212 MARSH STREET, SUITE 3
SAN LUIS OBISPO, CA 93401

COPY MAILED

MAR 17 2008

In re Application of	:	
ROSENBERG, Louis B.	:	
Application No. 11/421,394	:	DECISION ON PETITION
Filed: May 31, 2006	:	TO WITHDRAW
Attorney Docket No. **3502.140**	:	FROM RECORD
	:	

This is a decision on the Request to Withdraw as attorney or agent of record under 37 C.F.R. § 1.36(b), filed September 4, 2007 and re-submitted October 5, 2007.

The request is **NOT APPROVED** as moot.

A review of the file record indicates that the power of attorney to **LAW OFFICE OF PHILIP A. STEINER** has been revoked by the applicant of the patent application on October 31, 2007. Accordingly, the request to withdraw under 37 C.F.R. § 1.36(b) is moot.

All future communications from the Office will continue to be directed to the below-listed address until otherwise notified by applicant.

Telephone inquires concerning this decision should be directed to the undersigned at 571-272-7253.

Monica A. Graves
Petitions Examiner
Office of Petitions

cc: **SINSHEIMER JUHNKE LEBENS & MCIVOR, LLP**
1010 PEACH STREET
P.O. BOX 31
SAN LUIS OBISPO, CA 93406

SPE RESPONSE FOR CERTIFICATE OF CORRECTION

Paper No.: _____

DATE : 3/18/09

TO SPE OF : ART UNIT 2893

SUBJECT : Request for Certificate of Correction for Appl. No.: 11421400 Patent No.: 7462886 B2

Please respond to this request for a certificate of correction within 7 days.

FOR IFW FILES:

Please review the requested changes/corrections as shown in the **COCIN** document(s) in the IFW application image. No new matter should be introduced, nor should the scope or meaning of the claims be changed.

Please complete the response (see below) and forward the completed response to scanning using document code **COCX**.

FOR PAPER FILES:

Please review the requested changes/corrections as shown in the attached certificate of correction. Please complete this form (see below) and forward it with the file to:

Certificates of Correction Branch (CofC)

South Tower - 9A22

Palm Location 7580

You can fax the Directors/SPE response to 571-270-9990

LAMONTE NEWSOME

Certificates of Correction Branch

703-308-9390 ext. 112

Thank You For Your Assistance

SPE RESPONSE FOR CERTIFICATE OF CORRECTION

The request for issuing the above-identified correction(s) is hereby:

Note your decision on the appropriate box.

☒ **Approved** — **All** changes apply.

☐ **Approved in Part** — Specify below which changes **do not** apply.

☐ **Denied** — State the reasons for denial below.

Comments: _____

Darienne Menbleau AU2893

SPE **Art Unit**

UNITED STATES PATENT AND TRADEMARK OFFICE

COMMISSIONER FOR PATENTS
UNITED STATES PATENT AND TRADEMARK OFFICE
P.O. BOX 1450
ALEXANDRIA, VA 22313-1450
www.uspto.gov

TOWNSEND AND TOWNSEND AND CREW, LLP
TWO EMBARCADERO CENTER
EIGHTH FLOOR
SAN FRANCISCO CA 94111-3834

COPY MAILED

MAR 0 2 2009

OFFICE OF PETITIONS

In re Application of :
Haggerty, et al. :
Application No. 11/421,407 :
Filed: May 31, 2006 :
Attorney Docket No. 027524-001510US :

ON PETITION

This is a decision on the petition under the unintentional provisions of 37 CFR 1.137(b), filed January 2, 2009, to revive the above-identified application.

The petition is DISMISSED.

Any request for reconsideration of this decision must be submitted within TWO (2) MONTHS from the mail date of this decision. Extensions of time under 37 CFR 1.136(a) are permitted. The reconsideration request should include a cover letter entitled "Renewed Petition under 37 CFR 1.137(b)." This is not a final agency action within the meaning of 5 U.S.C. § 704.

The application became abandoned June 18, 2008 for failure to timely submit an appeal brief in response to the Notice of Appeal filed April 17, 2008. Notice of Abandonment was mailed December 19, 2008.

A grantable petition under 37 CFR 1.137(b) must be accompanied by: (1) the required reply, unless previously filed; (2) the petition fee as set forth in 37 CFR 1.17(m); (3) a statement that the entire delay in filing the required reply from the due date for the reply until the filing of a grantable petition pursuant to 37 CFR 1.137(b) was unintentional; and (4) any terminal disclaimer (and fee as set forth in 37 CFR 1.20(d)) required by 37 CFR 1.137(d). Where there is a question as to whether either the abandonment or the delay in filing a petition under 37 CFR 1.137 was unintentional, the Director may require additional information. See MPEP 711.03(c)(II)(C) and (D).

The instant petition fails to satisfy requirement (1). Petitioner indicates that the required reply is the submission of an extension of time. This is an improper reply as an extension of time under 37 CFR 1.136 must be filed prior to the expiration of the maximum extendable period for reply. See, In re Application of S., 8 USPQ2d 1630, 1631 (Comm'r Pats. 1988). Since the $1,175.00

extension of time fee submitted with the petition was subsequent to the maximum extendable period for reply, this fee is unnecessary and will be credited to petitioner's deposit account.

The proposed reply required for consideration of a petition to revive must be an appeal brief under 37 CFR 41.37 and the appeal brief fee required by 37 CFR 41.20(b)(2), a Request for Continued Examination and submission (37 CFR 1.114), or the filing of a continuing application under 37 CFR 1.53(b).

Further correspondence with respect to this matter should be addressed as follows:

By Mail: Mail Stop PETITION
Commissioner for Patents
P. O. Box 1450
Alexandria, VA 22313-1450

By hand: U. S. Patent and Trademark Office
Customer Service Window, Mail Stop Petitions
Randolph Building
401 Dulany Street
Alexandria, VA 22314

The centralized facsimile number is (571) 273-8300.

Telephone inquiries concerning this decision should be directed to the undersigned at (571) 272-3205.

Alesia M. Brown
Petitions Attorney
Office of Petitions

UNITED STATES PATENT AND TRADEMARK OFFICE

COMMISSIONER FOR PATENTS
UNITED STATES PATENT AND TRADEMARK OFFICE
P.O. BOX 1450
ALEXANDRIA, VA 22313-1450
www.uspto.gov

TOWNSEND AND TOWNSEND AND CREW, LLP
TWO EMBARCADERO CENTER
EIGHTH FLOOR
SAN FRANCISCO CA 94111-3834

COPY MAILED

MAR 30 2009

OFFICE OF PETITIONS

In re Application of	:	
Haggerty, et al.	:	
Application No. 11/421,407	:	ON PETITION
Filed: May 31, 2006	:	
Attorney Docket No. 027524-001510US	:	

This is a decision on the renewed petition under the unintentional provisions of 37 CFR 1.137(b), filed March 12, 2009, to revive the above-identified application.

The petition is GRANTED.

The application became abandoned June 18, 2008 for failure to timely submit an appeal brief in response to the Notice of Appeal filed April 17, 2008. Notice of Abandonment was mailed December 19, 2008.

The petition satisfies the requirements of 37 CFR 1.137(b) in that petitioner has supplied (1) the reply in the form of a continuing application under 37 CFR 1.53(b); (2) the required petition fee; and (3) a proper statement of unintentional delay.

This application is being revived solely for purposes of continuity. As continuity has been established by this decision, the application is again abandoned in favor of continuing application No. 12/272,652.

Telephone inquiries concerning this decision should be directed to the undersigned at (571) 272-3205.

/ALESIA M. BROWN/

Alesia M. Brown
Petitions Attorney
Office of Petitions