UNITED STATES PATENT AND TRADEMARK OFFICE

Commissioner for Patents
United States Patent and Trademark Office
P.O. Box 1450
Alexandria, VA 22313-1450
www.uspto.gov

MAILED

MAY 10 2010

OFFICE OF PETITIONS

QUALCOMM INCORPORATED
5775 MOREHOUSE DR.
SAN DIEGO CA 92121

In re Application of	:	
Arnab DAS et al.	:	
Application No. 11/486,601	:	DECISION ON PETITION
Filed: July 14, 2006	:	UNDER 37 CFR 1.78(a)(3)
Attorney Docket No. 060637B13	:	

This is a decision on the petition under 37 CFR 1.78(a)(3), filed January 21, 2010, to accept an unintentionally delayed claim under 35 U.S.C. § 120 for the benefit of priority to the prior-filed nonprovisional applications set forth in the amendment filed with the petition.

The petition is **GRANTED**.

A petition for acceptance of a claim for late priority under 37 CFR 1.78(a)(3) is only applicable to those applications filed on or after November 29, 2000. Further, the petition is appropriate only after the expiration of the period specified in 37 CFR 1.78(a)(2)(ii). In addition, the petition under 37 CFR 1.78(a)(3) must be accompanied by:

(1) the reference required by 35 U.S.C. § 120 and 37 CFR 1.78(a)(2)(i) of the prior-filed application, unless previously submitted;
(2) the surcharge set forth in § 1.17(t); and
(3) a statement that the entire delay between the date the claim was due under 37 CFR 1.78(a)(2)(ii) and the date the claim was filed was unintentional. The Director may require additional information where there is a question whether the delay was unintentional.

All of the above requirements having been satisfied, the late claim for priority under 35 U.S.C. § 120 is accepted as being unintentionally delayed.

The granting of the petition to accept the delayed benefit claim to the prior-filed applications under 37 CFR 1.78(a)(3) should not be construed as meaning that this application is entitled to the benefit of the prior-filed applications. In order for this application to be entitled to the benefit of the prior-filed applications, all other requirements under 35 U.S.C. § 120 and 37 CFR 1.78(a)(1) and (a)(2) must be met. Similarly, the fact that the corrected Filing Receipt accompanying this decision on petition includes the prior-filed applications should not be construed as meaning that applicant is entitled to the claim for benefit of priority to the prior-filed applications noted thereon. Accordingly, the examiner will, in due course, consider this benefit claim and determine whether the application is entitled to the benefit of the earlier filing date.

A corrected Filing Receipt, which includes the priority claim to the prior-filed nonprovisional applications, accompanies this decision on petition.

Any inquiries concerning this decision may be directed to Michelle R. Eason at (571) 272-4231. All other inquiries concerning either the examination procedures or status of the application should be directed to the Technology Center.

This application is being forwarded to Technology Center Art Unit 2617 for consideration by the examiner of applicant's entitlement to claim benefit of priority under 35 U.S.C. § 120 to the prior-filed applications.

Thurman K. Page
Petitions Examiner
Office of Petitions

ATTACHMENT: Corrected Filing Receipt

UNITED STATES PATENT AND TRADEMARK OFFICE

UNITED STATES DEPARTMENT OF COMMERCE
United States Patent and Trademark Office
Address: COMMISSIONER FOR PATENTS
P.O. Box 1450
Alexandria, Virginia 22313-1450
www.uspto.gov

APPLICATION NUMBER	FILING or 371(c) DATE	GRP ART UNIT	FIL FEE REC'D	ATTY.DOCKET.NO	TOT CLAIMS	IND CLAIMS
11/486,601	07/14/2006	2617	3580	060637B13	49	8

CONFIRMATION NO. 4394

CORRECTED FILING RECEIPT

23696
QUALCOMM INCORPORATED
5775 MOREHOUSE DR.
SAN DIEGO, CA 92121

Date Mailed: 05/10/2010

Receipt is acknowledged of this non-provisional patent application. The application will be taken up for examination in due course. Applicant will be notified as to the results of the examination. Any correspondence concerning the application must include the following identification information: the U.S. APPLICATION NUMBER, FILING DATE, NAME OF APPLICANT, and TITLE OF INVENTION. Fees transmitted by check or draft are subject to collection. Please verify the accuracy of the data presented on this receipt. **If an error is noted on this Filing Receipt, please submit a written request for a Filing Receipt Correction. Please provide a copy of this Filing Receipt with the changes noted thereon. If you received a "Notice to File Missing Parts" for this application, please submit any corrections to this Filing Receipt with your reply to the Notice. When the USPTO processes the reply to the Notice, the USPTO will generate another Filing Receipt incorporating the requested corrections**

Applicant(s)

Arnab Das, Summit, NJ;
Sundeep Rangan, Jersey City, NJ;
Pablo Anigstein, Gillette, NJ;
Junyi Li, Bedminster, NJ;
Sathyadev Venkata Uppala, Whitehouse Station, NJ;
Rajiv Laroia, Far Hills, NJ;

Power of Attorney: The patent practitioners associated with Customer Number 23696

Domestic Priority data as claimed by applicant

This appln claims benefit of 60/752,973 12/22/2005
and is a CIP of 10/648,766 08/25/2003 PAT 7,218,948
which claims benefit of 60/449,729 02/24/2003

Foreign Applications

If Required, Foreign Filing License Granted: 08/04/2006

The country code and number of your priority application, to be used for filing abroad under the Paris Convention, is **US 11/486,601**

Projected Publication Date: Not Applicable

Non-Publication Request: No

Early Publication Request: No

Title

Efficient reporting of information in a wireless communication system

Preliminary Class

370

PROTECTING YOUR INVENTION OUTSIDE THE UNITED STATES

Since the rights granted by a U.S. patent extend only throughout the territory of the United States and have no effect in a foreign country, an inventor who wishes patent protection in another country must apply for a patent in a specific country or in regional patent offices. Applicants may wish to consider the filing of an international application under the Patent Cooperation Treaty (PCT). An international (PCT) application generally has the same effect as a regular national patent application in each PCT-member country. The PCT process **simplifies** the filing of patent applications on the same invention in member countries, but **does not result** in a grant of "an international patent" and does not eliminate the need of applicants to file additional documents and fees in countries where patent protection is desired.

Almost every country has its own patent law, and a person desiring a patent in a particular country must make an application for patent in that country in accordance with its particular laws. Since the laws of many countries differ in various respects from the patent law of the United States, applicants are advised to seek guidance from specific foreign countries to ensure that patent rights are not lost prematurely.

Applicants also are advised that in the case of inventions made in the United States, the Director of the USPTO must issue a license before applicants can apply for a patent in a foreign country. The filing of a U.S. patent application serves as a request for a foreign filing license. The application's filing receipt contains further information and guidance as to the status of applicant's license for foreign filing.

Applicants may wish to consult the USPTO booklet, "General Information Concerning Patents" (specifically, the section entitled "Treaties and Foreign Patents") for more information on timeframes and deadlines for filing foreign patent applications. The guide is available either by contacting the USPTO Contact Center at 800-786-9199, or it can be viewed on the USPTO website at http://www.uspto.gov/web/offices/pac/doc/general/index.html.

For information on preventing theft of your intellectual property (patents, trademarks and copyrights), you may wish to consult the U.S. Government website, http://www.stopfakes.gov. Part of a Department of Commerce initiative, this website includes self-help "toolkits" giving innovators guidance on how to protect intellectual property in specific countries such as China, Korea and Mexico. For questions regarding patent enforcement issues, applicants may call the U.S. Government hotline at 1-866-999-HALT (1-866-999-4158).

LICENSE FOR FOREIGN FILING UNDER

Title 35, United States Code, Section 184

Title 37, Code of Federal Regulations, 5.11 & 5.15

GRANTED

The applicant has been granted a license under 35 U.S.C. 184, if the phrase "IF REQUIRED, FOREIGN FILING LICENSE GRANTED" followed by a date appears on this form. Such licenses are issued in all applications where the conditions for issuance of a license have been met, regardless of whether or not a license may be required as

set forth in 37 CFR 5.15. The scope and limitations of this license are set forth in 37 CFR 5.15(a) unless an earlier license has been issued under 37 CFR 5.15(b). The license is subject to revocation upon written notification. The date indicated is the effective date of the license, unless an earlier license of similar scope has been granted under 37 CFR 5.13 or 5.14.

This license is to be retained by the licensee and may be used at any time on or after the effective date thereof unless it is revoked. This license is automatically transferred to any related applications(s) filed under 37 CFR 1.53(d). This license is not retroactive.

The grant of a license does not in any way lessen the responsibility of a licensee for the security of the subject matter as imposed by any Government contract or the provisions of existing laws relating to espionage and the national security or the export of technical data. Licensees should apprise themselves of current regulations especially with respect to certain countries, of other agencies, particularly the Office of Defense Trade Controls, Department of State (with respect to Arms, Munitions and Implements of War (22 CFR 121-128)); the Bureau of Industry and Security, Department of Commerce (15 CFR parts 730-774); the Office of Foreign AssetsControl, Department of Treasury (31 CFR Parts 500+) and the Department of Energy.

NOT GRANTED

No license under 35 U.S.C. 184 has been granted at this time, if the phrase "IF REQUIRED, FOREIGN FILING LICENSE GRANTED" DOES NOT appear on this form. Applicant may still petition for a license under 37 CFR 5.12, if a license is desired before the expiration of 6 months from the filing date of the application. If 6 months has lapsed from the filing date of this application and the licensee has not received any indication of a secrecy order under 35 U.S.C. 181, the licensee may foreign file the application pursuant to 37 CFR 5.15(b).

UNITED STATES PATENT AND TRADEMARK OFFICE

UNITED STATES DEPARTMENT OF COMMERCE
United States Patent and Trademark Office
Address: COMMISSIONER FOR PATENTS
P.O. Box 1450
Alexandria, Virginia 22313-1450
www.uspto.gov

BLAKELY SOKOLOFF TAYLOR & ZAFMAN LLP
1279 OAKMEAD PARKWAY
SUNNYVALE, CA 94085-4040

Mail Date: 04/21/2010

Applicant	: Art Pharn	: DECISION ON REQUEST FOR
Patent Number	: 7584289	: RECALCULATION of PATENT
Issue Date	: 09/01/2009	: TERM ADJUSTMENT IN VIEW
Appliction No	: 11/486,603	: OF WYETH AND NOTICE OF INTENT TO
Filed	: 07/14/2006	: ISSUE CERTIFICATE OF CORRECTION
		:

The Request for Recalculation is **GRANTED** to the extent indicated.

The patent term adjustment has been determined to be **486** days. The USPTO will *sua sponte* issue a certificate of correction reflecting the amount of PTA days determined by the recalculation.

Prior to the issuance of the certificate of correction, the USPTO will afford patentee an opportunity to be heard and request reconsideration. Accordingly, patentee has **one month or thirty (30) days**, whichever is longer, to file a request for reconsideration of this patent term adjustment calculation. See 35 U.S.C. 154(b)(3)(B)(ii) and 37 CFR 1.322(a)(4). No extensions of time will be granted under 37 CFR 1.136.

Patentee should use document code PET.OP if electronically filing a request for reconsideration of this patent term adjustment calculation. The patentee must also include the information required by 37 CFR 1.705(b)(2) and the fee required by 37 CFR 1.18(e). If patentee does not file a timely request for reconsideration of this patent term adjustment calculation including the information required by 37 CFR 1.705(b)(2) and the fee required by 37 CFR 1.18(e), the USPTO will issue a certificate of correction reflecting the PTA determination noted above.

Patentee should be aware that in order to preserve the right to review in the United States District Court for the District of Columbia of the USPTO patent term adjustment determination, patentee must ensure that he or she also take the steps required under 35 U.S.C. 154(b)(4)(A) in a timely manner. Nothing in the request for recalculation should be construed as providing an alternative time frame for commencing a civil action under 35 U.S.C. 154(b)(4)(A).

Any questions concerning this decision should be directed to the Office of Patent Legal Administration at 571-272-7702.

UNITED STATES PATENT AND TRADEMARK OFFICE

Commissioner for Patents
United States Patent and Trademark Office
P.O. Box 1450
Alexandria, VA 22313-1450
www.uspto.gov

BUSKOP LAW GROUP, P.C.
1776 YORKTOWN
SUITE 550
HOUSTON TX 77056

COPY MAILED

OCT 0 5 2006

OFFICE OF PETITIONS

In re Application of :
RODKEY et al. :
Application No. 11/486,611 : DECISION ON PETITION
Filed: July 14, 2006 : TO MAKE SPECIAL UNDER
Attorney Docket No. 1441.009 : 37 CFR 1.102(c)(2)
:

This is a decision on the petition under 37 CFR 1.102(c)(2)(iii), filed July 14, 2006, to make the above-identified application special based on the invention materially contributing to countering terrorism as set forth in M.P.E.P. § 708.02, Section XI.

The petition is **DISMISSED**.

A grantable petition to make an application special under 37 CFR 1.102(c)(2)(iii) and MPEP § 708.02, Section XI: Inventions for Countering Terrorism, should state that special status is sought because the invention materially contributes to countering terrorism. International terrorism as defined in 18 U.S.C. 2331 includes:

> activities that - (A) involve violent acts or acts dangerous to human life that are a violation of the criminal laws of the United States or of any State, or that would be a criminal violation if committed within the jurisdiction of the United States or of any State; [and] (B) appear to be intended - (i) to intimidate or coerce a civilian population; (ii) to influence the policy of a government by intimidation or coercion; or (iii) to affect the conduct of a government by assassination or kidnapping...

If the disclosure it not clear on its face that the claimed invention is materially directed to countering terrorism, the petition must be accompanied by a statement by the applicant, assignee or a registered attorney/agent explaining how the materiality standard is met. The types of technology for countering terrorism could include, but are not limited to, systems for detecting/identifying explosives, aircraft sensors/security systems, and vehicular barricades/disabling systems. No fee is required.

The USPTO's final rule amending 37 CFR 1.102(c)(2) states:

> The materially standard does not permit an applicant to speculate as to how a hypothetical end-user might specially apply the invention in a manner that could counter terrorism. Nor does such standard permit an applicant to enjoy the benefit of advance examination merely because some minor aspect of the claimed invention may be directed to countering terrorism:..[Response to Comment 65] applicants should not expect to have their petitions granted without a clear demonstration that the claimed invention is materially related to countering terrorism. 69 Fed. Reg. 56511 (Sept. 21, 2004)

The present petition does not clearly set forth that the claimed invention is countering the activities defined in 18 U.S.C. 2331. First, terrorism includes activities that both (1) involve violent acts or acts dangerous to human life that are a violation of the criminal laws of the United States or of any State, or that would be a criminal violation if committed within the jurisdiction of the United States or of any State *and* (B) appear to be intended - (i) to intimidate or coerce a civilian population; (ii) to influence the policy of a government by intimidation or coercion; or (iii) to affect the conduct of a government by assassination or kidnapping. While the activities described in the petition, e.g., school shootings, are serious and violent acts dangerous to human life and a violation of the criminal law of the United States or any state, this violence does not appear to be intended to (i) to intimidate or coerce a civilian population; (ii) to influence the policy of a government by intimidation or coercion; or (iii) to affect the conduct of a government by assassination or kidnapping. Second assuming that the activities described in the application meet the above definition of terrorism, the claimed invention does not actually counter these violent activities. Rather, the claimed invention is a messaging system that notifies users and transmits responses. Further steps would be required to actually offset or nullify terrorism. Thus, no advancement in the technology of countering terrorism has been persuasively shown.

Further correspondence with respect to this matter should be addressed as follows:

By Mail: Mail Stop PETITION
Commissioner for Patents
P. O. Box 1450
Alexandria, VA 22313-1450

By hand: U. S. Patent and Trademark Office
Customer Service Window, Mail Stop Petitions
Randolph Building
401 Dulany Street
Alexandria, VA 22314

By FAX: (571) 273-8300

Telephone inquiries concerning this decision should be directed to the undersigned at 571-272-4787.

All other inquiries concerning either the examination or status of the application should be directed to the Technology Center.

The application is being forwarded to the Technology Center Art Unit 1615 for action in its regular turn.

Denise Pothier
Petitions Examiner
Office of Petitions

UNITED STATES PATENT AND TRADEMARK OFFICE

UNITED STATES DEPARTMENT OF COMMERCE
United States Patent and Trademark Office
Address: COMMISSIONER FOR PATENTS
P.O. Box 1450
Alexandria, Virginia 22313-1450
www.uspto.gov

Roger A. Lamb
1259 W. Ninth St.
Upland, CA 91786

Mail Date: 04/21/2010

Applicant	: Roger A. Lamb	: DECISION ON REQUEST FOR
Patent Number	: 7654365	: RECALCULATION of PATENT
Issue Date	: 02/02/2010	: TERM ADJUSTMENT IN VIEW
Appliction No	: 11/486,651	: OF WYETH AND NOTICE OF INTENT TO
Filed	: 07/14/2006	: ISSUE CERTIFICATE OF CORRECTION
		:

The Request for Recalculation is **GRANTED** to the extent indicated.

The patent term adjustment has been determined to be **829** days. The USPTO will *sua sponte* issue a certificate of correction reflecting the amount of PTA days determined by the recalculation.

Prior to the issuance of the certificate of correction, the USPTO will afford patentee an opportunity to be heard and request reconsideration. Accordingly, patentee has **one month or thirty (30) days**, whichever is longer, to file a request for reconsideration of this patent term adjustment calculation. See 35 U.S.C. 154(b)(3)(B)(ii) and 37 CFR 1.322(a)(4). No extensions of time will be granted under 37 CFR 1.136.

Patentee should use document code PET.OP if electronically filing a request for reconsideration of this patent term adjustment calculation. The patentee must also include the information required by 37 CFR 1.705(b)(2) and the fee required by 37 CFR 1.18(e). If patentee does not file a timely request for reconsideration of this patent term adjustment calculation including the information required by 37 CFR 1.705(b)(2) and the fee required by 37 CFR 1.18(e), the USPTO will issue a certificate of correction reflecting the PTA determination noted above.

Patentee should be aware that in order to preserve the right to review in the United States District Court for the District of Columbia of the USPTO patent term adjustment determination, patentee must ensure that he or she also take the steps required under 35 U.S.C. 154(b)(4)(A) in a timely manner. Nothing in the request for recalculation should be construed as providing an alternative time frame for commencing a civil action under 35 U.S.C. 154(b)(4)(A).

Any questions concerning this decision should be directed to the Office of Patent Legal Administration at 571-272-7702.

UNITED STATES PATENT AND TRADEMARK OFFICE

Commissioner for Patents
United States Patent and Trademark Office
P.O. Box 1450
Alexandria, VA 22313-1450
www.uspto.gov

Paper No.

PHILIP S. JOHNSON
JOHNSON & JOHNSON
ONE JOHNSON & JOHNSON PLAZA
NEW BRUNSWICK NJ 08933-7003

COPY MAILED

MAY 25 2007

OFFICE OF PETITIONS

In re Application of :
Michael Tokarski, James Peck, :
Edward Dzwill, George Brock, :
Michael Schulte, Ronald Coleman :
and James Davis : DECISION ACCORDING STATUS
Application No. 11/486,658 : UNDER 37 C.F.R. § 1.47(a)
Filed: July 14, 2006 :
Attorney Docket No. VTN-5089USNP :

This is a decision on the PETITION UNDER 37 CFR 1.47(a) filed January 8, 2007. This decision is made in light of the supplement to petition filed January 18, 2007.

The petition is **GRANTED**.

The above-identified application was filed on July 14, 2006, with an unexecuted declaration. Accordingly, on August 4, 2006, the Office mailed a "Notice to File Missing Parts of Application," requiring an executed oath or declaration and the surcharge for its late filing. This Notice set a two-month time limit for reply with extensions of time obtainable under § 1.136(a).

In response, applicants filed the instant petition, made timely by an accompanying petition and fee for extension of time within the third month. The petition included four declarations executed, in combination, by joint inventors Tokarski, Dzwill, Brock, Schulte, Coleman and Davis on behalf of themselves and on behalf of non-signing inventor Peck. Applicants indicate that status under 1.47(a) is proper because joint inventor Peck refuses to join in the application.

On petition signed by patent attorney Ruby Hope, and with supporting documentary evidence, petitioner has submitted adequate proof that by his conduct in not responding after being presented with all of the application papers, inventor Peck has refused to join in the application.

The declarations filed January 8, 2007 have been reviewed and found in compliance with § 1.63. The supplemental petition was submitted to correct the last known address of inventor Peck (It was stated that the papers were presented to the inventor at the correct last known address). The petition includes a petition fee of $130. The required petition fee is $200. The fee deficiency of $70 is being charged to Deposit Account No. 10-0750, as authorized.

In view thereof, this application is hereby accorded Rule 1.47(a) status.

As provided in new Rule 1.47(c), this Office will forward notice of this application's filing to the non-signing inventor at the address given in the petition. Notice of the filing of this application will also be published in the Official Gazette.

Telephone inquiries related to this decision should be directed to the undersigned at (571) 272-3219.

Nancy Johnson
Senior Petitions Attorney
Office of Petitions

UNITED STATES PATENT AND TRADEMARK OFFICE

Commissioner for Patents
United States Patent and Trademark Office
P.O. Box 1450
Alexandria, VA 22313-1450
www.uspto.gov

JAMES PECK
MALLARD RIDGE APARTMENTS
13301 MAPLE KNOLL WAY
APT. 1406
MAPLE GROVE, MN 55369

COPY MAILED

MAY 25 2007

OFFICE OF PETITIONS

In re Application of :
Michael Tokarski, James Peck, :
Edward Dzwill, George Brock, :
Michael Schulte, Ronald Coleman : LETTER
and James Davis :
Application No. 11/486,658 :
Filed: July 14, 2006 :
Attorney Docket No. VTN-5089USNP :

Dear Mr. Peck:

You are named as a joint inventor in the above-identified United States patent application filed under the provisions of 35 U.S.C. 116 (United States Code) and 37 CFR 1.47(a), Rules of Practice in Patent Cases. Should a patent be granted on the application you will be designated therein as a joint inventor.

As a named inventor you are entitled to inspect any paper in the file wrapper of the application, order copies of all or any part thereof (at a prepaid cost per 37 CFR 1.19) or make your position of record in the application. Alternatively, you may arrange to do any of the preceding through a registered patent attorney or agent presenting written authorization from you. If you care to join the application, counsel of record (see below) would presumably assist you. Joining in the application would entail the filing of an appropriate oath or declaration by you pursuant to 37 CFR 1.63. However, no action on your part is required for this patent to issue with you as a named inventor.

Telephone inquiries regarding this communication should be directed to Petitions Attorney Nancy Johnson at (571) 272-3219. Requests for information regarding your application should be directed to the File Information Unit at (703) 308-2733. Information regarding how to pay for and order a copy of the application, or a specific paper in the application, should be directed to the Certification Division at (571) 272-3150 or 1-800-972-6382 (outside the Washington D.C. area).

Nancy Johnson
Senior Petitions Attorney
Office of Petitions

PHILIP S. JOHNSON
JOHNSON & JOHNSON
ONE JOHNSON & JOHNSON PLAZA
NEW BRUNSWICK NJ 08933-7003

UNITED STATES PATENT AND TRADEMARK OFFICE

Commissioner for Patents
United States Patent and Trademark Office
P.O. Box 1450
Alexandria, VA 22313-1450
www.uspto.gov

COPY MAILED

DEC 16 2009

OFFICE OF PETITIONS

SPENLER FELDMAN
372 HO'OPALUA DRIVE
MAKAWAO HI 96768

In re Application of :
Spencer B. FELDMAN :
Application No. 11/486,662 : DECISION ON PETITION
Filed: July 13, 2006 :
Attorney Docket No. **81046.00003** :

This is a decision on the petition under the unintentional provisions of 37 CFR 1.137(b), filed October 29, 2009, to revive the above-identified application.

The petition is **DISMISSED**.

Any request for reconsideration of this decision must be submitted within TWO (2) MONTHS from the mail date of this decision. Extensions of time under 37 CFR 1.136(a) are permitted. The reconsideration request should include a cover letter entitled "Renewed Petition under 37 CFR 1.137(b)." This is **not** a final agency action within the meaning of 5 U.S.C. § 704.

The application became abandoned for failure to reply in a timely manner to the Restriction Requirement, mailed March 23, 2009, which set a shortened statutory period for reply of one (1) month or thirty (30) days (whichever is later). No extensions of time under the provisions of 37 CFR 1.136(a) were obtained. Accordingly, the application became abandoned on April 24, 2009.

A grantable petition under 37 CFR 1.137(b) must be accompanied by: (1) the required reply, unless previously filed; (2) the petition fee as set forth in 37 CFR 1.17(m); (3) a statement that the entire delay in filing the required reply from the due date for the reply until the filing of a grantable petition pursuant to 37 CFR 1.137(b) was unintentional; and (4) any terminal disclaimer (and fee as set forth in 37 CFR 1.20(d)) required by 37 CFR 1.137(d). Where there is a question as to whether either the abandonment or the delay in filing a petition under 37 CFR 1.137 was unintentional, the Director may require additional information. See MPEP 711.03(c)(II)(C) and (D). The instant petition lacks item(s) (1).

A reply to the Restriction Requirement on March 23, 2009 was not submitted with the petition.

Further correspondence with respect to this matter should be addressed as follows:

By Mail: Mail Stop PETITION
Commissioner for Patents
P. O. Box 1450
Alexandria, VA 22313-1450

By hand: U. S. Patent and Trademark Office
Customer Service Window, Mail Stop Petitions
Randolph Building
401 Dulany Street
Alexandria, VA 22314

The centralized facsimile number is **(571) 273-8300.**

Telephone inquiries concerning this decision should be directed to Tredelle Jackson at (571) 272-2783.

Ramesh Krishnamurthy
Petitions Examiner
Office of Petitions

UNITED STATES PATENT AND TRADEMARK OFFICE

Commissioner for Patents
United States Patent and Trademark Office
P.O. Box 1450
Alexandria, VA 22313-1450
www.uspto.gov

SPENLER FELDMAN
372 HO'OPALUA DRIVE
MAKAWAO HI 96768

COPY MAILED
MAR 09 2010

In re Application of :
Spencer B. FELDMAN :
Application No. 11/486,662 : DECISION ON PETITION
Filed: July 13, 2006 :
Attorney Docket No. **81046.00003** :

This is a decision on the renewed petition under the unintentional provisions of 37 CFR 1.137(b), filed January 05, 2010 and re-submitted on January 14, 2010, to revive the above-identified application.

The petition is **GRANTED**.

The application became abandoned for failure to reply in a timely manner to the Restriction Requirement, mailed March 23, 2009, which set a shortened statutory period for reply of one (1) month or thirty (30) days (whichever is later). No extensions of time under the provisions of 37 CFR 1.136(a) were obtained. Accordingly, the application became abandoned on April 24, 2009.

The petition satisfies the requirements of 37 CFR 1.137(b) in that petitioner has supplied (1) the reply in the form of an election, (2) the petition fee of $810, and (3) a proper statement of unintentional delay. Accordingly, the reply to the restriction requirement of March 23, 2009 is accepted as having been unintentionally delayed.

Telephone inquiries concerning this decision should be directed to Tredelle Jackson at (571) 272-2783.

This application is being referred to Technology Center AU 1655 for appropriate action on the concurrently filed election.

Ramesh Krishnamurthy
Petitions Examiner
Office of Petitions

SPE RESPONSE FOR CERTIFICATE OF CORRECTION

Paper No.:20100302

DATE : March 02, 2010

TO SPE OF : ART UNIT 1652

SUBJECT : Request for Certificate of Correction on Patent No.: 7,645,739

A response is requested with respect to the accompanying request for a certificate of correction.

Please complete this form and return with file, within **7** days to:
Certificates of Correction Branch - ST (South Tower) 9A22
Palm location **7590** - Tel. No. (703) 305-8309

With respect to the change(s) requested, correcting Office and/or Applicant's errors, should the patent read as shown in the certificate of correction? No new matter should be introduced, nor should the scope or meaning of the claims be changed.

Thank You For Your Assistance **Certificates of Correction Branch**

The request for issuing the above-identified correction(s) is hereby:

Note your decision on the appropriated box.

☒ **Approved** All changes apply.

☐ **Approved in Part** Specify below which changes **do not** apply.

☐ **Denied** State the reasons for denial below.

Comments:

/ANDREW WANG/
Supervisory Patent Examiner.Art Unit 1652

UNITED STATES PATENT AND TRADEMARK OFFICE

COMMISSIONER FOR PATENTS
UNITED STATES PATENT AND TRADEMARK OFFICE
P.O. BOX 1450
ALEXANDRIA, VA 22313-1450
WWW.USPTO.GOV

Paper No. None

DICKSTEIN SHAPIRO LLP
1177 AVENUE OF THE AMERICAS 6TH AVENUE
NEW YORK NY 10036-2714

COPY MAILED

JAN 23 2007

OFFICE OF PETITIONS

In re Application of	:	
Volker Lehmann, Florian Binder,	:	
Thomas Haneder, and Alfred	:	
Martin	:	
Application No. 11/486,671	:	DECISION ON PETITION UNDER
Filed: July 14, 2006	:	37 C.F.R. §1.47(A)
Attorney Docket No. M0194.0030	:	
Title: CHIP CARRIER SUBSTRATE	:	
AND PRODUCTION METHOD THEREFOR	:	

This is in response to the petition under 37 C.F.R. §1.47(a)[1], filed October 27, 2006.

On July 14, 2006, the application was filed, identifying Volker Lehmann, Florian Binder, Thomas Haneder, and Alfred Martin as joint inventors. The application was deposited without an executed declaration. On August 8, 2006, a "Notice to File Missing Parts of Nonprovisional Application - Filing Date

1 A grantable petition under 37 C.F.R. §1.47(a) requires:
(1) the petition fee of $200;
(2) a surcharge of either $65 or $130, if the petition is not filed at the time of filing the application, as set forth in 37 CFR § 1.16(f);
(3) a statement of the last known address of the non-signing inventors;
(4) proof that either:
a) a copy of the entire application (specification, claims, drawings, and the oath or declaration) was sent or given to the non-signing inventor for review and proof that the non-signing inventor refuses to join in the application, or
b) the non-signing inventor cannot be found or reached after diligent effort, and a statement that these efforts were not successful;
(5) a declaration which complies with 37 CFR §1.63.

Granted" (Notice) was mailed, notifying applicant that a fully executed oath or declaration and the surcharge associated with the late submission of the same were required. This Notice set a two-month period for reply.

With the present petition, Petitioner's representative has submitted the petition fee, the surcharge associated with the late submission of an oath or declaration, a declaration which has been executed by each of the joint inventors save the first-listed joint inventor, and a one-month extension of time to make timely this response.

Petitioner has explained that the non-signing inventor is deceased, and has set forth:

> The death of Dr. Lehmann is a very sensitive matter, making it difficult to approach Dr. Lehmann's wife, the legal representative of Dr. Lehmann's estate, for a signature on the Declaration for the present patent application.

Petition, page 1.

MPEP 409.03(c), sets forth, *in toto*:

> Legal Representatives of Deceased Inventor Not Available:
>
> 37 C.F.R. §1.47 should not be considered an alternative to 37 C.F.R. §1.42 or 35 U.S.C. §117 since the language "cannot be found or reached after diligent effort" has no reasonable application to a deceased inventor[2]. However, 37 C.F.R. §1.47 does apply where a known legal representative of a deceased inventor cannot be found or reached after diligent effort, or refuses to make application. In such cases, the last known address of the legal representative must be given. See MPEP §409.03(e).

A petition under 37 C.F.R. §1.47(a) is not appropriate where the inventor is deceased. Mr. Lehmann is the only non-signing joint inventor, and a petition under this section of the C.F.R. is appropriate only if his representative cannot be located or refuses to sign. It does not appear that Petitioner's representative has made any effort to contact the legal representative, or provide her with a complete copy of the application. As such, Petitioner's representative does not appear to be in a position to assert that the legal representative cannot be found or has refused to execute the declaration.

---

2 In re Application Papers Filed September 10, 1954, 108 USPQ 340 (Comm'r Pat. 1955). See 37 C.F.R. §1.42 and MPEP § 409.01.

It follows that the present petition must be **DISMISSED AS INAPPROPRIATE.**

Any renewed petition must be submitted within **TWO MONTHS** from the mail date of this decision. Extensions of time under 37 C.F.R. §1.136(a) are permitted. The reply should include a cover letter entitled "Renewed Petition Under 37 C.F.R. §1.47(a)." This is not a final agency action within the meaning of 5 U.S.C 704.

The renewed petition should indicate in a prominent manner that the attorney handling this matter is Paul Shanoski, and may be submitted by mail[3], hand-delivery[4], or facsimile[5].

If responding by mail, Petitioner's representative is advised not to place the undersigned's name on the envelope. Only the information that appears in the footnote should be included - the inclusion of any additional information will delay the delivery of the response to the undersigned.

Telephone inquiries regarding *this decision* should be directed to the undersigned at (571) 272-3225[6]. All other inquiries concerning examination procedures or status of the application should be directed to the Technology Center.

Paul Shanoski
Senior Attorney
Office of Petitions
United States Patent and Trademark Office

---

3 Mail Stop Petition, Commissioner for Patents, United States Patent and Trademark Office, P.O. Box 1450, Alexandria, VA, 22313-1450.
4 Customer Window, Randolph Building, 401 Dulaney Street, Alexandria, VA, 22314.
5 (571) 273-8300- please note this is a central facsimile number.
6 Petitioner's representative will note that all practice before the Office should be in writing, and the action of the Office will be based exclusively on the written record in the Office. See 37 C.F.R. §1.2. As such, Petitioner's representative is reminded that no telephone discussion may be controlling or considered authority for any further action(s) of Petitioner's representative.

UNITED STATES PATENT AND TRADEMARK OFFICE

COMMISSIONER FOR PATENTS
UNITED STATES PATENT AND TRADEMARK OFFICE
P.O. BOX 1450
ALEXANDRIA, VA 22313-1450
WWW.USPTO.GOV

Paper No. None

DICKSTEIN SHAPIRO LLP
1177 AVENUE OF THE AMERICAS 6TH AVENUE
NEW YORK NY 10036-2714

COPY MAILED

JUN 14 2007

OFFICE OF PETITIONS

In re Application of :
Volker Lehmann, Florian Binder, :
Thomas Haneder, and Alfred :
Martin :
Application No. 11/486,671 :
Filed: July 14, 2006 :
Attorney Docket No. M0194.0030 :
Title: CHIP CARRIER SUBSTRATE :
AND PRODUCTION METHOD THEREFOR :

DECISION ON RENEWED PETITION UNDER 37 C.F.R. §1.47(A)

This is in response to the renewed petition under 37 C.F.R. §1.47(a)[1], filed May 23, 2007.

On July 14, 2006, the application was filed, identifying Volker Lehmann, Florian Binder, Thomas Haneder, and Alfred Martin as

---

1 A grantable petition under 37 C.F.R. §1.47(a) requires:
(1) the petition fee of $200;
(2) a surcharge of either $65 or $130, if the petition is not filed at the time of filing the application, as set forth in 37 CFR § 1.16(f);
(3) a statement of the last known address of the non-signing inventors;
(4) proof that either:
a) a copy of the entire application (specification, claims, drawings, and the oath or declaration) was sent or given to the non-signing inventor for review and proof that the non-signing inventor refuses to join in the application, or
b) the non-signing inventor cannot be found or reached after diligent effort, and a statement that these efforts were not successful;
(5) a declaration which complies with 37 CFR §1.63.

joint inventors. The application was deposited without an executed declaration. On August 8, 2006, a "Notice to File Missing Parts of Nonprovisional Application - Filing Date Granted" (Notice) was mailed, notifying applicant that a fully executed oath or declaration and the surcharge associated with the late submission of the same were required. This Notice set a two-month period for reply.

An original petition was filed on October 27, 2006, along with a declaration that had been executed by each of the joint inventors save Mr. Lehmann. The petition was dismissed via the mailing of a decision on January 23, 2007; Petitioner asserted that the non-signing inventor is deceased, however it did not appear that the legal representative had been contacted.

With this renewed petition, Petitioner has submitted a two-month extension of time, along with a declaration which has been executed by what appears to be a "T. Lehman,' although the name of this individual does not appear in printed form. It is likely that this is the wife of the deceased inventor, and is signing as the legal representative of the same.

The declaration that has been submitted with this renewed petition cannot be accepted, as it **fails to comply with Rule § 1.64(b)** - the legal representative of the deceased inventor has executed the declaration on his behalf, however the declaration fails to "state that the person is a legal representative," and the declaration fails to contain the "citizenship, residence, and mailing address of the legal representative."

It follows that the present petition must be **DISMISSED.**

Any renewed petition must be submitted within **TWO MONTHS** from the mail date of this decision. Extensions of time under 37 C.F.R. §1.136(a) are permitted. The reply should include a cover letter entitled "Second Renewed Petition Under 37 C.F.R. § 1.47(a)." This is not a final agency action within the meaning of 5 U.S.C 704.

The second renewed petition should indicate in a prominent manner that the attorney handling this matter is Paul Shanoski, and may be submitted by mail[2], hand-delivery[3], or facsimile[4].

---

2 Mail Stop Petition, Commissioner for Patents, United States Patent and Trademark Office, P.O. Box 1450, Alexandria, VA, 22313-1450.
3 Customer Window, Randolph Building, 401 Dulaney Street, Alexandria, VA, 22314.
4 (571) 273-8300- please note this is a central facsimile number.

If responding by mail, Petitioner's representative is advised not to place the undersigned's name on the envelope. Only the information that appears in the footnote should be included - the inclusion of any additional information will delay the delivery of the response to the undersigned.

Telephone inquiries regarding *this decision* should be directed to the undersigned at (571) 272-3225[5]. All other inquiries concerning examination procedures or status of the application should be directed to the Technology Center.

Paul Shanoski
Senior Attorney
Office of Petitions
United States Patent and Trademark Office

5 Petitioner will note that all practice before the Office should be in writing, and the action of the Office will be based exclusively on the written record in the Office. See 37 C.F.R. §1.2. As such, Petitioner is reminded that no telephone discussion may be controlling or considered authority for any further action(s) of Petitioner.

UNITED STATES PATENT AND TRADEMARK OFFICE

COMMISSIONER FOR PATENTS
UNITED STATES PATENT AND TRADEMARK OFFICE
P.O. BOX 1450
ALEXANDRIA, VA 22313-1450
WWW.USPTO.GOV

Paper No. None

DICKSTEIN SHAPIRO LLP
1177 AVENUE OF THE AMERICAS 6TH AVENUE
NEW YORK NY 10036-2714

COPY MAILED

NOV 0 5 2007

OFFICE OF PETITIONS

In re Application of	:	
Volker Lehmann, Florian Binder,	:	
Thomas Haneder, and Alfred	:	
Martin	:	
Application No. 11/486,671	:	DECISION ON SECOND RENEWED
Filed: July 14, 2006	:	PETITION UNDER
Attorney Docket No. M0194.0030	:	37 C.F.R. § 1.47(A)
Title: CHIP CARRIER SUBSTRATE	:	
AND PRODUCTION METHOD THEREFOR	:	

This is in response to the second renewed petition under 37 C.F.R. §1.47(a)[1], filed October 3, 2007.

On July 14, 2006, the application was filed, identifying Volker Lehmann, Florian Binder, Thomas Haneder, and Alfred Martin as

---

1 A grantable petition under 37 C.F.R. §1.47(a) requires:
(1) the petition fee of $200;
(2) a surcharge of either $65 or $130, if the petition is not filed at the time of filing the application, as set forth in 37 CFR § 1.16(f);
(3) a statement of the last known address of the non-signing inventors;
(4) proof that either:
a) a copy of the entire application (specification, claims, drawings, and the oath or declaration) was sent or given to the non-signing inventor for review and proof that the non-signing inventor refuses to join in the application, or
b) the non-signing inventor cannot be found or reached after diligent effort, and a statement that these efforts were not successful;
(5) a declaration which complies with 37 CFR § 1.63.

joint inventors. The application was deposited without an executed declaration. On August 8, 2006, a "Notice to File Missing Parts of Nonprovisional Application - Filing Date Granted" (Notice) was mailed, notifying applicant that a fully executed oath or declaration and the surcharge associated with the late submission of the same were required. This Notice set a two-month period for reply.

An original petition was filed on October 27, 2006, along with a declaration that had been executed by each of the joint inventors save Mr. Lehmann. The petition was dismissed via the mailing of a decision on January 23, 2007; Petitioner asserted that the non-signing inventor is deceased, however it did not appear that the legal representative had been contacted.

A renewed petition was filed on May 23, 2007, and was dismissed via the mailing of a decision on June 14, 2007, as the declaration that had been submitted therewith could not be accepted by the Office.

With this second renewed petition, Petitioner has submitted a two-month extension of time so as to make timely this response. Petitioner has further included a declaration that has been executed by the legal representative of the non-signing inventor.

MPEP 409.03(c), sets forth, *in toto*:

> Legal Representatives of Deceased Inventor Not Available:
>
> 37 C.F.R. §1.47 should not be considered an alternative to 37 C.F.R. §1.42 or 35 U.S.C. §117 since the language "cannot be found or reached after diligent effort" has no reasonable application to a deceased inventor[2]. However, 37 C.F.R. §1.47 does apply where a known legal representative of a deceased inventor cannot be found or reached after diligent effort, or refuses to make application. In such cases, the last known address of the legal representative must be given. See MPEP §409.03(e).

As such, a petition under 37 C.F.R. §1.47(a) is not appropriate where the inventor is deceased. It follows that the present petition must be **DISMISSED AS INAPPROPRIATE.**

The Office of Patent Application Processing (OPAP) will be notified of this decision so that the application may receive further processing.

---

2 In re Application Papers Filed September 10, 1954, 108 USPQ 340 (Comm'r Pat. 1955). See 37 C.F.R. §1.42 and MPEP § 409.01.

It is noted that the declaration does not indicate that Mr. Lehmann is deceased. Applicant may wish to submit an amended version of page 3 of the declaration, which indicates that this inventor is deceased.

The general phone number for OPAP is 571-272-4000. Telephone inquiries **regarding this decision** should be directed to the undersigned at (571) 272-3225[3].

Paul Shanoski
Senior Attorney
Office of Petitions
United States Patent and Trademark Office

3 Petitioner will note that all practice before the Office should be in writing, and the action of the Office will be based exclusively on the written record in the Office. See 37 C.F.R. § 1.2. As such, Petitioner is reminded that no telephone discussion may be controlling or considered authority for any further action(s) of Petitioner.

UNITED STATES PATENT AND TRADEMARK OFFICE

Commissioner for Patents
United States Patent and Trademark Office
P.O. Box 1450
Alexandria, VA 22313-1450
www.uspto.gov

PATRICIA ANN JOHNSON
703 Mimosa Drive
SIKESTON MO 63801

COPY MAILED

AUG 15 2007

OFFICE OF PETITIONS

In re Application of	:	
Patricia Ann Johnson	:	
Application No. 11/486,673	:	DECISION ON PETITION
Filed: August 22, 2006	:	TO MAKE SPECIAL UNDER
Attorney Docket No.	:	37 CFR 1.102(c)(1)
	:	

This is a decision on the petition under 37 CFR 1.102(c)(1), filed May 7, 2007, to make the above-identified application special based on applicant's age as set forth in M.P.E.P. § 708.02, Section IV.

The petition is **GRANTED**.

A grantable petition to make an application special under 37 CFR 1.102(c)(1) and MPEP § 708.02, Section IV: Applicant's Age must be accompanied by evidence showing that at least one of the applicants is 65 years of age, or more, such as a birth certificate or a statement by applicant. No fee is required

The instant petition includes a statement from the applicant declaring that she is 65 years of age or older. Accordingly, the above-identified application has been accorded "special" status.

Telephone inquiries concerning this decision should be directed to Terri Williams at 571-272-2991.

All other inquiries concerning either the examination or status of the application should be directed to the Technology Center.

The application is being forwarded to the Technology Center Art Unit 3728 for action on the merits commensurate with this decision.

T. Williams

Terri Williams
Petitions Examiner
Office of Petitions

UNITED STATES PATENT AND TRADEMARK OFFICE

Commissioner for Patents
United States Patent and Trademark Office
P.O. Box 1450
Alexandria, VA 22313-1450
www.uspto.gov

KILPATRICK STOCKTON LLP
1001 WEST FOURTH STREET
WINSTON SALEM, NC 27101

COPY MAILED

JAN 18 2007

OFFICE OF PETITIONS

In re Application of :
Claus Henkel :
Application No. 11/486,700 : DECISION ACCORDING STATUS
Filed: July 14, 2006 : UNDER 37 CFR 1.47(b)
Attorney Docket No. 34662-332680 :

This decision is in response to the petition filed December 4,2006 under 37 CFR 1.47(b).

The petition is **GRANTED**.

The above-identified application was filed on July 14, 2006 naming Claus Henkel as the sole inventor but without an executed oath or declaration. A Notice to File Missing Parts was mailed August 4, 2006 requiring an executed oath or declaration and a surcharge for the late filing of the oath or declaration.

In response to the Notice to File Missing Parts, with a petition under 37 CFR 1.47(b) and a two month extension of time request, the applicant shows that a copy of the application was sent to the non-signing inventor and that to date, applicants have not received an executed copy of the oath or declaration. This petition is filed alleging that after diligent effort the inventor cannot be located and seeks status under 37 CFR 1.47(b).

A grantable petition under 37 CFR 1.47(b) requires:

(1) proof that the non-signing inventor cannot be reached or refuses to sign the oath or declaration after having been presented with the application papers (specification, claims and drawings);

(2) an acceptable oath or declaration in compliance with 35 U.S.C. §§ 115 and 116;

(3) the petition fee;

(4) a statement of the last known address of the non-signing inventor;

(5) proof of proprietary interest, and

(6) proof of irreparable damage.

The petition is accompanied by proof that the application materials have been sent to the non-signing inventor, the petition fee, the last known address for Mr. Henkel, a

declaration executed by Ingomar Penz, President and CEO, KNAPP LOGISTICS & AUTOMATION, INC., the assignee, in the absence of a signature by the sole inventor, a copy of the assignment previously executed by the sole inventor to show proprietary interest and a statement that the application is filed to preserve the applicants rights in the application. Finally, petitioner has submitted a 37 CFR 3.73(b) statement.

The above-identified application and papers have been reviewed and found in compliance with 37 CFR 1.47(b). In view thereof, this application is hereby accorded Rule 1.47(b) status.

Thus, as provided in Rule 1.47c, this Office will forward notice of this application's filing to the non-signing inventors at the addresses given in the petition. Notice of the filing of this application will also be published in the Official Gazette.

This matter is being referred to the Office of Initial Patent Examination for further pre-examination processing.

Telephone inquiries concerning this matter may be directed to the undersigned Petitions Attorney at (571) 272-3212.

Patricia Faison-Ball
Senior Petitions Attorney
Office of Petitions

UNITED STATES PATENT AND TRADEMARK OFFICE

Commissioner for Patents
United States Patent and Trademark Office
P.O. Box 1450
Alexandria, VA 22313-1450
www.uspto.gov

FULBRIGHT & JAWORSKI L.L.P
2200 ROSS AVENUE
SUITE 2800
DALLAS TX 75201-2784

MAILED

SEP 22 2009

OFFICE OF PETITIONS

In re Patent No. 7,538,621	:	
Birleson et al.	:	DECISION ON REQUEST FOR
Issue Date: May 26, 2009	:	RECONSIDERATION OF PATENT
Application No. 11/486,706	:	TERM ADJUSTMENT and
Filed: July 14, 2006	:	NOTICE OF INTENT TO ISSUE
Attorney Docket No.	:	CERTIFICATE OF CORRECTION
49581/P011C1C1/10609150	:	

This is a decision on the "APPLICATION FOR PATENT TERM ADJUSTMENT UNDER 37 CFR 1.705(d)" filed June 8, 2009. Patentees request that the Patent Term Adjustment for the above-identified patent be set at three hundred ninety-nine (399) days.

The request for reconsideration of the patent term adjustment indicated in the patent is **GRANTED**.

Patentees are given **THIRTY (30) DAYS or ONE (1) MONTH, whichever is longer**, from the mail date of this decision to respond. No extensions of time will be granted under 37 CFR 1.136.

The patent term adjustment indicated in the patent is to be corrected by issuance of a certificate of correction showing a revised Patent Term Adjustment of **three hundred ninety-nine (399) days**.

On May 26, 2009, the above-identified application matured into U.S. Patent No. 7,538,621. The patent issued with a revised Patent Term Adjustment of three hundred sixteen (316) days. On June 8, 2009, patentees filed a timely request for reconsideration within two (2) months of the date the patent issued. See 37 CFR 1.705(d). Patentees assert that there were

no circumstances constituting a failure to engage in reasonable efforts to conclude processing or examination of the above-identified application as set forth in 37 CFR 1.704. Specifically, patentees dispute the reduction of eighty-three (83) days based on the filing of terminal disclaimer on March 5, 2009. Patentees state that they terminal disclaimer was filed in response to a direct request from the examiner and that said request was not made until after the mailing of the notice of allowance on February 6, 2009. Patentees further assert that there was no undue delay because patentees engaged in reasonable efforts to conclude the prosecution of the application by filing the terminal disclaimer within two days of the examiner's request. Accordingly, patentees maintain that the 83 day reduction to the patent term for the filing of the terminal disclaimer was not warranted and should be removed.

The record confirms that patentees filed a terminal disclaimer on March 5, 2009, after the mailing of the Notice of Allowance. Nonetheless, under the circumstances specific to this case, the filing of the terminal disclaimer should not be considered "a failure to engage in reasonable efforts" to conclude processing or examination of an application and should not result in reduction of the patent term adjustment pursuant to 37 CFR 1.704(c)(10). The record reveals that the Notice of Allowance was mailed prematurely given the need for the terminal disclaimer. No request was made for the filing of the terminal disclaimer prior to the mailing of the Notice of Allowance. Rather, the amendment filed December 16, 2008, was entered and a Notice of Allowance was issued. Thereafter, the examiner requested the filing of the terminal disclaimer. Patentees' first opportunity to supply the terminal disclaimer occurred after the mailing of the Notice of Allowance. Accordingly, the reduction of eighty-three (83) days is not warranted and will be removed.

In view thereof, the patent term adjustment indicated on the patent should be three hundred ninety-nine (399) days.

This matter is being referred to the Certificates of Correction Branch for issuance of a certificate of correction in order to rectify this error. The Office will issue a certificate of correction indicating that the term of the above-identified patent is extended or adjusted by **three ninety-nine (399) days**.

Telephone inquiries specific to this matter should be directed to Kenya A. McLaughlin, Petitions Attorney, at (571) 272-3222.

Christina Tartera Donnell

Christina Tartera Donnell
Senior Petitions Attorney
Office of Petitions

Enclosure: Copy of DRAFT Certificate of Correction

DRAFT COPY

UNITED STATES PATENT AND TRADEMARK OFFICE

CERTIFICATE OF CORRECTION

PATENT : 7,538,621 B2

DATED : May 26, 2009

INVENTOR(S) : Birleson, et al.

It is certified that error appears in the above-identified patent and that said Letters Patent is hereby corrected as shown below:

On the cover page,

[*] Notice: Subject to any disclaimer, the term of this patent is extended or adjusted under 35 USC 154(b) by (316) days

Delete the phrase "by 316 days" and insert – by 399 days--

UNITED STATES PATENT AND TRADEMARK OFFICE

Commissioner for Patents
United States Patent and Trademark Office
P.O. Box 1450
Alexandria, VA 22313-1450
www.uspto.gov

WESTMAN CHAMPLIN & KELLY, P.A.
SUITE 1400
900 SECOND AVENUE SOUTH
MINNEAPOLIS MN 55402

8/13/09

In re Application of:
HUFFMAN, TODD A. et al;
Serial No.: 11/486,708
Filed: July 14, 2006
Docket: B79.12-0006
Title: RE-SEALABLE CAN MECHANISM

DECISION ON PETITION

This is a decision on the petition filed on July 17, 2009 seeking withdrawal of the finality of the Office action mailed June 8, 2009. This petition is being considered pursuant to 37 CFR §1.181. No fee is required.

The petition is granted.

In the petition, petitioner argues that the new ground of rejection in the Final Office action of June 8, 2009 was not necessitated by any amendment nor was necessitated by any IDS statement. After consulting with the examiner, it was agreed the finality of the Office action of June 8, 2009 will be withdrawn. As such, the Office action mailed on June 8, 2009 will be designated as non-final Office action. The period to respond to the Office action of June 9, 2009 remains unchanged. Since the finality is being withdrawn, any amendment responding to the Office action of June 8, 2009 will be treated as a 37 CFR § 1.111 amendment.

In view of the record, petitioner's request to withdraw the finality of the Office action dated June 8, 2009 is granted.

The application is being forwarded to the Supervisory Patent Examiner of Art Unit 3781 awaiting a response to the outstanding Office action mailed June 8, 2009. Any inquiry regarding this decision should be directed to Henry Yuen, Special Programs Examiner, at (571) 272-4856.

According, the petition is granted.

Donald T. Hajec, Director
Technology Center 3700

UNITED STATES PATENT AND TRADEMARK OFFICE

UNITED STATES DEPARTMENT OF COMMERCE
United States Patent and Trademark Office
Address: COMMISSIONER FOR PATENTS
P.O. Box 1450
Alexandria, Virginia 22313-1450
www.uspto.gov

BAKER BOTTS LLP
2001 ROSS AVENUE
6TH FLOOR
DALLAS, TX 75201-2980

Mail Date: 04/20/2010

Applicant	: Samuel J. Rodriguez	: DECISION ON REQUEST FOR
Patent Number	: 7597527	: RECALCULATION of PATENT
Issue Date	: 10/06/2009	: TERM ADJUSTMENT IN VIEW
Appliction No	: 11/486,724	: OF WYETH AND NOTICE OF INTENT TO
Filed	: 07/14/2006	: ISSUE CERTIFICATE OF CORRECTION
		:

The Request for Recalculation is **GRANTED** to the extent indicated.

The patent term adjustment has been determined to be **161** days. The USPTO will *sua sponte* issue a certificate of correction reflecting the amount of PTA days determined by the recalculation.

Prior to the issuance of the certificate of correction, the USPTO will afford patentee an opportunity to be heard and request reconsideration. Accordingly, patentee has **one month or thirty (30) days**, whichever is longer, to file a request for reconsideration of this patent term adjustment calculation. See 35 U.S.C. 154(b)(3)(B)(ii) and 37 CFR 1.322(a)(4). No extensions of time will be granted under 37 CFR 1.136.

Patentee should use document code PET.OP if electronically filing a request for reconsideration of this patent term adjustment calculation. The patentee must also include the information required by 37 CFR 1.705(b)(2) and the fee required by 37 CFR 1.18(e). If patentee does not file a timely request for reconsideration of this patent term adjustment calculation including the information required by 37 CFR 1.705(b)(2) and the fee required by 37 CFR 1.18(e), the USPTO will issue a certificate of correction reflecting the PTA determination noted above.

Patentee should be aware that in order to preserve the right to review in the United States District Court for the District of Columbia of the USPTO patent term adjustment determination, patentee must ensure that he or she also take the steps required under 35 U.S.C. 154(b)(4)(A) in a timely manner. Nothing in the request for recalculation should be construed as providing an alternative time frame for commencing a civil action under 35 U.S.C. 154(b)(4)(A).

Any questions concerning this decision should be directed to the Office of Patent Legal Administration at 571-272-7702.

UNITED STATES PATENT AND TRADEMARK OFFICE

Commissioner for Patents
United States Patent and Trademark Office
P.O. Box 1450
Alexandria, VA 22313-1450
www.uspto.gov

ATER WYNNE LLP
222 SW COLUMBIA, SUITE 1800
PORTLAND OR 97201-6618

COPY MAILED

OCT 13 2006

OFFICE OF PETITIONS

In re Application of :
BENZ, et al. :
Application No. 11/486,780 : DECISION ON PETITION
Filed: July 14, 2006 : TO MAKE SPECIAL UNDER
Attorney Docket No. 018-304-4 : 37 CFR 1.102(c)(1)
:

This is a decision on the petition under 37 CFR 1.102(c)(1), filed July 14, 2006, to make the above-identified application special based on applicant's age as set forth in M.P.E.P. § 708.02, Section IV.

The petition is **GRANTED**.

A grantable petition to make an application special under 37 CFR 1.102(c)(1) and MPEP § 708.02, Section IV: Applicant's Age, must be accompanied by evidence showing that at least one of the applicants is 65 years of age, or more, such as a birth certificate or a statement by applicant. No fee is required.

The instant petition includes an affidavit from inventor Herbert J. Semler, attesting to his age. Accordingly, the above-identified application has been accorded "special" status.

Telephone inquiries concerning this decision should be directed to Monica A. Graves at 571-272-7253.

All other inquiries concerning either the examination or status of the application should be directed to the Technology Center.

The application is being forwarded to the Technology Center Art Unit 3734 for action on the merits commensurate with this decision.

David Bucci
Petitions Examiner
Office of Petitions

UNITED STATES PATENT AND TRADEMARK OFFICE

Commissioner for Patents
United States Patent and Trademark Office
P.O. Box 1450
Alexandria, VA 22313-1450
www.uspto.gov
DIW Mail-08

ATER WYNNE LLP
222 SW COLUMBIA, SUITE 1800
PORTLAND OR 97201-6618

COPY MAILED

MAR 17 2008

OFFICE OF PETITIONS

In re Application of	:	
Benz et al.	:	
Application Number: 11/486780	:	ON PETITION
Filing Date: 07/14/2006	:	
Attorney Docket Number: 103433-0003	:	

This is a decision in reference to the petition to withdraw holding of abandonment under 37 CFR 1.181(a) filed on January 25, 2008.

The petition is **GRANTED**.

This application was held abandoned on May 10, 2007, for failure to properly reply to the Notice of Fee Deficiency mailed on April 9, 2007, which set a one (1) month shortened statutory period for reply. Notice of Abandonment was mailed on December 27, 2007.

Petitioners assert that a proper and timely response to the Notice of Fee Deficiency mailed on May 9, 2007, was timely filed on May 2, 2007.

A review of the record reveals the following:

1. On January 18, 2007, a non-final Office action was mailed, setting a three (3) month shortened statutory period for reply.

2. On March 29, 2007, a proposed amendment was filed.

3. On April 9, 2007, a Notice of Fee Deficiency was mailed, stating that the amendment has not been entered because additional claim fees were due. Additionally, the Notice stated that the status identifier of Claim 23 needed to corrected, and that new claims should not be underlined.

4. On May 2, 2007, an amendment was filed. Petitioner stated in the remarks section of the amendment that Claims 1-22 and 26-31 are canceled, and that Claim 23 is amended hereby, and that no additional claim fee was believed due.

5. On October 17, 2007, a "Response to Notice of Fee Deficiency was filed. Petitioners submitted payment for the excess claim fees and requested that the USPTO "enter our amendment originally filed 3/29/2007. Accordingly, applicant requests entry of the original amendment filed on 3/29/2007, and consideration on the merits."

6. On December 27, 2007, Notice of Abandonment was mailed, stating, *inter alia*, that the fee filed on October 17, 2007 was untimely.

In the subject petition, petitioners argue that the response filed on May 2, 2007, was a timely response to the Notice of Fee Deficiency mailed on April 9, 2007.

Upon review, petitioner is correct a proper amendment canceling the excess claims was filed on May 2, 2007. As such, a proper response to the Notice of Fee Deficiency mailed on April 9, 2007, was filed on May 2, 2007. [1] Applicant's amendment complied with the requirements of 37 CFR 1.111 in responding to the fee deficiency by reducing the number of claims present in the application so that there was no fee deficiency present in the application.

Furthermore, as the paper filed on October 17, 2007, was not timely filed, the paper is not effective and could not be entered.

Accordingly, there was no abandonment in fact. The holding of abandonment is withdrawn, and the Notice of Abandonment is vacated.

As the excess claim fees paid on October 17, 2007, were not timely paid, and the request has not been entered, the fees paid on October 17, 2007, will be credited to counsel's deposit account.

Entry of the amendment filed on May 2, 2007 is hereby directed.

---

[1] See 37 CFR 1.135(c) and MPEP 714.03.

The application is being referred to Technology Center Art Unit 1615 for further processing.

Telephone inquiries concerning this matter may be directed to the undersigned at (571) 272-3231.

Douglas I. Wood
Senior Petitions Attorney
Office of Petitions

UNITED STATES PATENT AND TRADEMARK OFFICE

Commissioner for Patents
United States Patent and Trademark Office
P.O. Box 1450
Alexandria, VA 22313-1450
www.uspto.gov

Buchanan, Ingersoll & Rooney LLP
P.O. Box 1404
Alexandria, VA 22313-1404

COPY MAILED

SEP 29 2008

OFFICE OF PETITIONS

In re Application of	:	
Ronald de Jong	:	
Application No. 11/486,785	:	DECISION ON PETITION
Filed: July 14, 2006	:	TO WITHDRAW
Attorney Docket No. 0056808-000003	:	FROM RECORD
	:	

This is a decision on the Request to Withdraw as attorney or agent of record under 37 C.F.R. § 1.36(b), filed August 26, 2008.

The request is **APPROVED**.

A grantable request to withdraw as attorney/agent of record must be signed by every attorney/agent seeking to withdraw or contain a clear indication that one attorney is signing on behalf of another/others. A request to withdraw will not be approved unless at least 30 (thirty) days would remain between the date of approval and the later of the expiration date of a time to file a response or the expiration date of the maximum time period which can be extended under 37 C.F.R. § 1.136(a).

The request was signed by Brian P. O'Shaughnessy on behalf of all attorneys of record. All attorneys/agents have been withdrawn. Applicant is reminded that there is no attorney of record at this time.

All future correspondence will be directed to the first named inventor Ronald de Jong at the address indicated below.

There is no outstanding Office action at this time.

Telephone inquiries concerning this decision should be directed to Terri Williams at 571-272-2991.

Terri Williams
Petitions Examiner
Office of Petitions

cc: **Ronald de Jong**
132 Andrew Avenue
Encinitas, CA 92024

cc: **Ronald de Jong (WaterSkinz Inc.)**
123 Andrews Avenue
Encinitas, CA 92024

UNITED STATES PATENT AND TRADEMARK OFFICE

UNITED STATES DEPARTMENT OF COMMERCE
United States Patent and Trademark Office
Address: COMMISSIONER FOR PATENTS
P.O. Box 1450
Alexandria, Virginia 22313-1450
www.uspto.gov

APPLICATION NUMBER	FILING OR 371(C) DATE	FIRST NAMED APPLICANT	ATTY. DOCKET NO./TITLE
11/486,785	07/14/2006	Ronald de Jong	0056808-000003

CONFIRMATION NO. 4974

41790
BUCHANAN, INGERSOLL & ROONEY LLP
P.O. BOX 1404
ALEXANDRIA, VA 22313-1404

POWER OF ATTORNEY NOTICE

OC000000032306379

Date Mailed: 09/26/2008

NOTICE REGARDING CHANGE OF POWER OF ATTORNEY

This is in response to the Power of Attorney filed 08/26/2008.

- The withdrawal as attorney in this application has been accepted. Future correspondence will be mailed to the new address of record. 37 CFR 1.33.

/tswilliams/

Office of Data Management, Application Assistance Unit (571) 272-4000, or (571) 272-4200, or 1-888-786-0101

UNITED STATES PATENT AND TRADEMARK OFFICE

Commissioner for Patents
United States Patent and Trademark Office
P.O. Box 1450
Alexandria, VA 22313-1450
www.uspto.gov

E I DU PONT DE NEMOURS AND COMPANY
LEGAL PATENT RECORDS CENTER
BARLEY MILL PLAZA 25/1128
4417 LANCASTER PIKE
WILMINGTON DE 19805

COPY MAILED
DEC 13 2006
OFFICE OF PETITIONS

In re Application of	:	
Minor et al.	:	
Application No. 11/486,791	:	DECISION ON PETITION
Filed: July 13, 2006	:	TO MAKE SPECIAL UNDER
Attorney Docket No. FL1139USCIP1	:	37 CFR 1.102(c)(2)
	:	

This is a decision on the petition under 37 CFR 1.102(c)(2)(i), filed August 23, 2006, to make the above-identified application special based on the invention materially enhancing the quality of the environment as set forth in M.P.E.P. § 708.02, Section V.

The petition is **DISMISSED**.

A grantable petition to make an application special under 37 CFR 1.102(c)(2)(i) and MPEP § 708.02, Section V: Environmental Quality, must state that special status is sought because the invention materially enhances the quality of the environment by contributing to the restoration or maintenance of basic life-sustaining natural elements. If the disclosure is not clear on its face that the claimed invention materially enhances the quality of the environment by contributing to the restoration or maintenance of one of the basic life-sustaining natural elements, the petition must be accompanied by a statement by the applicant, assignee, or an attorney/agent registered to practice before the Office explaining how the materiality standard is met. No fee is required.

The instant invention is directed to chemical compositions comprising Fluoroolefin that could be used as a refrigerant having low or zero ozone depletion potential. That the compositions claimed in the instant invention could be used as refrigerant having low or zero ozone depletion potential, does not in itself satisfy the materiality standard, i.e. the petitioner has failed to explain how the claimed invention contributes in a significant, substantial, or noticeable manner to the maintenance of the basic life-sustaining natural elements. As a result, no material contribution to the restoration or maintenance of basic life-sustaining natural elements has been persuasively shown.

Further correspondence with respect to this matter should be addressed as follows:

By Mail: Mail Stop PETITION
Commissioner for Patents

P. O. Box 1450
Alexandria, VA 22313-1450

By hand: U. S. Patent and Trademark Office
Customer Service Window, Mail Stop Petitions
Randolph Building
401 Dulany Street
Alexandria, VA 22314

By FAX: (571) 273-8300

Telephone inquiries concerning this decision should be directed to Ramesh Krishnamurthy at 571-272-4914, or to the undersigned at 571-272-7099.

All other inquiries concerning either the examination or status of the application should be directed to the Technology Center.

The application is being forwarded to the Technology Center Art Unit 1751 for action in its regular turn.

David Bucei
Petitions Examiner
Office of Petitions

UNITED STATES PATENT AND TRADEMARK OFFICE

UNITED STATES DEPARTMENT OF COMMERCE
United States Patent and Trademark Office
Address: COMMISSIONER FOR PATENTS
P.O. Box 1450
Alexandria, Virginia 22313-1450
www.uspto.gov

E I DU PONT DE NEMOURS AND COMPANY
LEGAL PATENT RECORDS CENTER
BARLEY MILL PLAZA 25/1122B
4417 LANCASTER PIKE
WILMINGTON, DE 19805

Mail Date: 04/20/2010

Applicant	: Barbara Haviland Minor	: DECISION ON REQUEST FOR
Patent Number	: 7569170	: RECALCULATION of PATENT
Issue Date	: 08/04/2009	: TERM ADJUSTMENT IN VIEW
Appliction No	: 11/486,791	: OF WYETH
Filed	: 07/13/2006	:
		:

The Patentee's Request for Recalculation is **DISMISSED.**

This Request is deemed ineligible for consideration for one or more of the following reasons:

(A). The patent for which PTA recalculation is requested is either a design or reissue application or is a reexamination proceeding;

(B). The patent for which PTA recalculation is requested resulted from a utility or plant application filed under 35 USC 111(a) before May 29, 2000 and no CPA filed in the application on/after May 29, 2000;

(C). The patent for which PTA recalculation is requested resulted from an international application in which the international filing date was before May 29, 2000 and no CPA filed in the application on/after May 29, 2000;

(D). The patent for which PTA recalculation is requested issued on/after March 2, 2010;

(E). The Request for Recalculation was filed more than 180 days after the grant date of the patent and the request was not filed within two months of a dismissal of a request for reconsideration of the of the patent term under 37 CFR 1.705(d);

(F). The Request for Recalculation is not solely limited to USPTO pre-Wyeth interpretation of 35 U.S.C. 154(b)(2)(A);

or

(G). A civil action was filed pursuant to 35 U.S.C. 154(b)(4)(A)concerning the same patent at issue in this request.

Patentee may file a reply to this decision dismissing the Request for Recalculation. Patentee must file such reply within one month or thirty days, whichever is longer, of the mail date of the decision dismissing the Request for Recalculation. No fee is required if patentee is asserting in the reply that the dismissal for ineligibility is improper.

Patentee should use document code PET.OP if electronically filing a reply to this dismissal. If the USPTO finds that the request was improperly deemed ineligible, the USPTO will mail applicant a recalculation determination.

Patentee should be aware that in order to preserve the right to review in the United States District Court for the District of Columbia of the USPTO patent term adjustment determination, patentee must ensure that he or she also take the steps required under 35 U.S.C. 154(b)(4)(A). Nothing in the request for recalculation should be construed as providing an alternative time frame for commencing a civil action under 35 U.S.C. 154 (b)(4)(A).

Any questions concerning this decision should be directed to the Office of Patent Legal Administration at 571-272-7702.

UNITED STATES PATENT AND TRADEMARK OFFICE

UNITED STATES DEPARTMENT OF COMMERCE
United States Patent and Trademark Office
Address: COMMISSIONER FOR PATENTS
P.O. Box 1450
Alexandria, Virginia 22313-1450
www.uspto.gov

HICKMAN PALERMO TRUONG & BECKER/ORACLE
2055 GATEWAY PLACE
SUITE 550
SAN JOSE, CA 95110-1083

Mail Date: 04/21/2010

Applicant	: Zhen Hua Liu	: DECISION ON REQUEST FOR
Patent Number	: 7577642	: RECALCULATION of PATENT
Issue Date	: 08/18/2009	: TERM ADJUSTMENT IN VIEW
Appliction No	: 11/486,794	: OF WYETH AND NOTICE OF INTENT TO
Filed	: 07/13/2006	: ISSUE CERTIFICATE OF CORRECTION
		:

The Request for Recalculation is **GRANTED** to the extent indicated.

The patent term adjustment has been determined to be **279** days. The USPTO will *sua sponte* issue a certificate of correction reflecting the amount of PTA days determined by the recalculation.

Prior to the issuance of the certificate of correction, the USPTO will afford patentee an opportunity to be heard and request reconsideration. Accordingly, patentee has **one month or thirty (30) days**, whichever is longer, to file a request for reconsideration of this patent term adjustment calculation. See 35 U.S.C. 154(b)(3)(B)(ii) and 37 CFR 1.322(a)(4). No extensions of time will be granted under 37 CFR 1.136.

Patentee should use document code PET.OP if electronically filing a request for reconsideration of this patent term adjustment calculation. The patentee must also include the information required by 37 CFR 1.705(b)(2) and the fee required by 37 CFR 1.18(e). If patentee does not file a timely request for reconsideration of this patent term adjustment calculation including the information required by 37 CFR 1.705(b)(2) and the fee required by 37 CFR 1.18(e), the USPTO will issue a certificate of correction reflecting the PTA determination noted above.

Patentee should be aware that in order to preserve the right to review in the United States District Court for the District of Columbia of the USPTO patent term adjustment determination, patentee must ensure that he or she also take the steps required under 35 U.S.C. 154(b)(4)(A) in a timely manner. Nothing in the request for recalculation should be construed as providing an alternative time frame for commencing a civil action under 35 U.S.C. 154(b)(4)(A).

Any questions concerning this decision should be directed to the Office of Patent Legal Administration at 571-272-7702.

UNITED STATES PATENT AND TRADEMARK OFFICE

UNITED STATES DEPARTMENT OF COMMERCE
United States Patent and Trademark Office
Address: COMMISSIONER FOR PATENTS
P.O. Box 1450
Alexandria, Virginia 22313-1450
www.uspto.gov

HICKMAN PALERMO TRUONG & BECKER/ORACLE
2055 GATEWAY PLACE
SUITE 550
SAN JOSE, CA 95110-1083

Mail Date: 05/18/2010

Applicant : Zhen Hua Liu
Patent Number : 7577642
Issue Date : 08/18/2009
Application No: 11/486,794
Filed : 07/13/2006

: NOTICE CONCERNING IMPROPER
: CALCULATION OF PATENT TERM
: ADJUSTMENT BASED UPON USPTO
: IMPROPERLY MEASURING REDUCTION
: PERIOD UNDER 37 CFR 1.704(c)(10).

The United States Patent and Trademark Office (USPTO) discovered that in processing the recent recalculation decisions mailed in response to patentee's filed Request for Recalculation of Patent Term Adjustment in view of Wyeth, the USPTO improperly measured the reduction period for reductions under 37 CFR 1.704(c)(10). Pursuant to 37 CFR 1.704(c)(10), patentee's reduction begins on the date of filing the amendment under 37 CFR 1.312 ("1.312 amendment") or other related paper and ends on the date that the Office mails a response to the filing of the 1.312 amendment or other paper. It has been discovered that during the recalculation, the calculation failed to the limit the reduction to the mail date of the response to the 1.312 amendment or other paper. Accordingly, patentee's reductions were greater than warranted.

This notice **VACATES** the previous GRANTED request for recalculation and provides patentee with a revised GRANTED recalculation.

The patent term adjustment has been determined to be **312** days. The USPTO will *sua sponte* issue a certificate of correction reflecting the amount of patent term adjustment (PTA) days determined by the recalculation.

Prior to the issuance of the certificate of correction, the USPTO will afford patentee an opportunity to be heard and request reconsideration. Accordingly, patentee has **one month or thirty (30) days** from the mail date of this notice, whichever is longer, to file a request for reconsideration of this PTA calculation. See 35 U.S.C. § 154(b)(3)(B)(ii) and 37 CFR 1.322(a)(4).

Patentee should use document code PET.OP if electronically filing a request for reconsideration of this PTA calculation. The patentee must also include the information required by 37 CFR 1.705(b)(2), and the fee required by 37 CFR 1.18(e). If patentee does not file a timely request for reconsideration of this PTA calculation, including the information required by 37 CFR 1.705(b)(2) and the fee required by 37 CFR 1.18(e), the USPTO will issue a certificate of correction reflecting the PTA determination noted above.

Patentee should be aware that in order to preserve the right of review of the USPTO's PTA determination in the United States District Court for the District of Columbia, patentee must ensure that the steps required under 35 U.S.C. § 154 (b)(4) are taken in a timely manner. Nothing in the request for recalculation should be construed as providing an alternative time frame for commencing a civil action under 35 U.S.C. § 154(b)(4).

UNITED STATES PATENT AND TRADEMARK OFFICE

UNITED STATES DEPARTMENT OF COMMERCE
United States Patent and Trademark Office
Address: COMMISSIONER FOR PATENTS
P.O. Box 1450
Alexandria, Virginia 22313-1450
www.uspto.gov

BRINKS HOFER GILSON & LIONE
P.O. BOX 10395
CHICAGO, IL 60610

Mail Date: 04/21/2010

Applicant	: Takahito Maruyama	: DECISION ON REQUEST FOR
Patent Number	: 7594656	: RECALCULATION of PATENT
Issue Date	: 09/29/2009	: TERM ADJUSTMENT IN VIEW
Appliction No	: 11/486,806	: OF WYETH AND NOTICE OF INTENT TO
Filed	: 07/14/2006	: ISSUE CERTIFICATE OF CORRECTION
		:

The Request for Recalculation is **GRANTED** to the extent indicated.

The patent term adjustment has been determined to be **310** days. The USPTO will *sua sponte* issue a certificate of correction reflecting the amount of PTA days determined by the recalculation.

Prior to the issuance of the certificate of correction, the USPTO will afford patentee an opportunity to be heard and request reconsideration. Accordingly, patentee has **one month or thirty (30) days**, whichever is longer, to file a request for reconsideration of this patent term adjustment calculation. See 35 U.S.C. 154(b)(3)(B)(ii) and 37 CFR 1.322(a)(4). No extensions of time will be granted under 37 CFR 1.136.

Patentee should use document code PET.OP if electronically filing a request for reconsideration of this patent term adjustment calculation. The patentee must also include the information required by 37 CFR 1.705(b)(2) and the fee required by 37 CFR 1.18(e). If patentee does not file a timely request for reconsideration of this patent term adjustment calculation including the information required by 37 CFR 1.705(b)(2) and the fee required by 37 CFR 1.18(e), the USPTO will issue a certificate of correction reflecting the PTA determination noted above.

Patentee should be aware that in order to preserve the right to review in the United States District Court for the District of Columbia of the USPTO patent term adjustment determination, patentee must ensure that he or she also take the steps required under 35 U.S.C. 154(b)(4)(A) in a timely manner. Nothing in the request for recalculation should be construed as providing an alternative time frame for commencing a civil action under 35 U.S.C. 154(b)(4)(A).

Any questions concerning this decision should be directed to the Office of Patent Legal Administration at 571-272-7702.

UNITED STATES PATENT AND TRADEMARK OFFICE

Commissioner for Patents
United States Patent and Trademark Office
P.O. Box 1450
Alexandria, VA 22313-1450
www.uspto.gov

QUALCOMM INCORPORATED
5775 MOREHOUSE DR.
SAN DIEGO CA 92121

COPY MAILED
SEP 2 9 2008

In re Application of :
Sathyadev Venkata UPPALA et al :
Application No. 11/486,809 : ON PETITION
Filed: July 14, 2006 :
Attorney Docket No. 061160 :

This is a decision on the petition under 37 CFR 1.137(b), filed January 22, 2008, to revive the above-identified application.

The petition is **GRANTED.**

The petition satisfies the requirements of 37 CFR 1.137(b) in that petitioner has supplied (1) the required reply in the form of an amendment; (2) the petition fee of $1540.00; and (3) a showing to the satisfaction of the Commissioner that the entire delay was unintentional.

The application file is being forwarded to OIPE for processing.

Telephone inquiries concerning this decision should be directed to the undersigned at (571) 272-0602.

/Thurman K. Page/
Thurman K. Page
Petitions Examiner
Office of Petitions

UNITED STATES PATENT AND TRADEMARK OFFICE

Commissioner for Patents
United States Patent and Trademark Office
P.O. Box 1450
Alexandria, VA 22313-1450
www.uspto.gov

COPY MAILED

DEC 0 8 2009

OFFICE OF PETITIONS

QUALCOMM INCORPORATED
5775 MOREHOUSE DR.
SAN DIEGO CA 92121

In re Application of :
Sathyadev Venkata UPPALA :
Application No. 11/486,809 : DECISION ON PETITION
Filed: July 14, 2006 :
Attorney Docket No. 061160 :

This is a decision on the renewed petition under the unintentional provisions of 37 CFR 1.137(b), filed October 15, 2009, to revive the above-identified application.

The petition is **GRANTED**.

The application became abandoned for failure to reply in a timely manner to the non-final Office action mailed, February 05, 2009, which set a shortened statutory period for reply of three (3) month. No extensions of time under the provisions of 37 CFR 1.136(a) were obtained. Accordingly, the application became abandoned on May 06, 2009.

The petition satisfies the requirements of 37 CFR 1.137(b) in that petitioner has supplied (1) the reply in the form of an amendment; (2) the petition fee of $1,620.00; and (3) a proper statement of unintentional delay. Accordingly, the reply to the non-final Office action of September 11, 2008 is accepted as having been unintentionally delayed.

An extension of time under 37 CFR 1.136 must be filed prior to the expiration of the maximum extendable period for reply. *See* In re Application of S., 8 USPQ2d 1630, 1631 (Comm'r Pats. 1988). Since the $1,110.00 extension of time fee submitted with the petition on October 15, 2009 was subsequent to the maximum extendable period for reply, this fee is unnecessary and will be credited to petitioner's deposit account.

Telephone inquiries concerning this decision should be directed to the undersigned at (571) 272-4231.

The application file is being referred to Technology Center AU 2617 for appropriate action on the concurrently filed amendment.

Michelle R. Eason
Paralegal Specialist
Office of Petitions

UNITED STATES PATENT AND TRADEMARK OFFICE

Commissioner for Patents
United States Patent and Trademark Office
P.O. Box 1450
Alexandria, VA 22313-1450
www.uspto.gov

WHITE & CASE LLP
PATENT DEPARTMENT
1155 AVENUE OF THE AMERICAS
NEW YORK, NY 10036

COPY MAILED

AUG 22 2008

In re Application of :
Roland Kalb :
Application No. 11/486,815 : ON PETITION
Filed: July 13, 2006 :
Attorney Docket No. 1106680-0003

This is a decision on the petition, filed August 21, 2008 under 37 CFR 1.313(c)(2) to withdraw the above-identified application from issue after payment of the issue fee.

The petition is **GRANTED**.

The above-identified application is withdrawn from issue for consideration of a submission under 37 CFR 1.114 (request for continued examination). See 37 CFR 1.313(c)(2).

Petitioner is advised that the issue fee paid on July 17, 2008 in the above-identified application cannot be refunded. If, however, the above-identified application is again allowed, petitioner may request that it be applied towards the issue fee required by the new Notice of Allowance.[1]

Telephone inquiries should be directed to Irvin Dingle at (571) 272-3210.

This matter is being referred to Technology Center AU 2837 for processing of the request for continued examination under 37 CFR 1.114 and for consideration of the concurrently filed Information Disclosure Statement.

Irvin Dingle
Petitions Examiner
Office of Petitions

[1] The request to apply the issue fee to the new Notice may be satisfied by completing and returning the new Issue Fee Transmittal Form PTOL-85(b), which includes the following language thereon: Commissioner for Patents is requested to apply the Issue Fee and Publication Fee (if any) or re-apply any previously paid issue fee to the application identified above. Petitioner is advised that, whether a fee is indicated as being due or not, the Issue Fee Transmittal Form must be completed and timely submitted to avoid abandonment. Note the language in bold text on the first page of the Notice of Allowance and Fee(s) Due (PTOL-85).

UNITED STATES PATENT AND TRADEMARK OFFICE

Commissioner for Patents
United States Patent and Trademark Office
P.O. Box 1450
Alexandria, VA 22313-1450
www.uspto.gov

CENTRAL COAST PATENT AGENCY, INC
3 HANGAR WAY SUITE D
WATSONVILLE CA 95076

MAILED

AUG 11 2009

OFFICE OF PETITIONS

In re Patent No. 7,322,727	:	
Issue Date: January 29, 2008	:	
Application No. 11/486,850	:	DECISION ON PETITION
Filed: July 13, 2006	:	
Attorney Docket No. **7105.00US**	:	

This is a decision on the petition filed December 30, 2008, which is being treated as a request under 37 CFR 3.81(b)[1] to correct the name of the assignee on the front page of the above-identified patent by way of a Certificate of Correction.

The request is **GRANTED**.

Telephone inquiries concerning this decision may be directed to Tredelle Jackson at (571) 272-2783. Inquiries regarding the issuance of a certificate of correction should be directed to the Certificate of Correction Branch at (571) 272-4200.

The petition fee under 37 CFR 1.17(i) of $130 for processing this request has been charged to deposit account 50-0534 as authorized.

The Certificates of Correction Branch will be notified of this decision granting the petition under 37 CFR 3.81(b) and directing issuance of the requested Certificate of Correction.

Ramesh Krishnamurthy
Petitions Examiners
Office of Petitions

[1] *See* MPEP 1309, subsection II; and Official Gazette of June 22, 2004.

PTO/SB/44 (09-07)
Approved for use through 08/31/2010. OMB 0651-0033
U.S. Patent and Trademark Office; U.S. DEPARTMENT OF COMMERCE
Under the Paperwork Reduction Act of 1995, no persons are required to respond to a collection of information unless it displays a valid OMB control number.
(Also Form PTO-1050)

UNITED STATES PATENT AND TRADEMARK OFFICE
CERTIFICATE OF CORRECTION

PATENT NO. : 7,322,727

APPLICATION NO.: 11/486,850

ISSUE DATE : 01/29/2008

INVENTOR(S) : Martin Lampen and Hermann Kellermann

It is certified that an error appears or errors appear in the above-identified patent and that said Letters Patent is hereby corrected as shown below:

Assignee now reads: Automotive Lighting Reutlinger GmbH

Assignee should read: Automotive Lighting Reutlingen GmbH

MAILING ADDRESS OF SENDER (Please do not use customer number below):

Central Coast Patent Agency, Inc.
3 Hangar Way, Suite D
Watsonville, CA 95076

This collection of information is required by 37 CFR 1.322, 1.323, and 1.324. The information is required to obtain or retain a benefit by the public which is to file (and by the USPTO to process) an application. Confidentiality is governed by 35 U.S.C. 122 and 37 CFR 1.14. This collection is estimated to take 1.0 hour to complete, including gathering, preparing, and submitting the completed application form to the USPTO. Time will vary depending upon the individual case. Any comments on the amount of time you require to complete this form and/or suggestions for reducing this burden, should be sent to the Chief Information Officer, U.S. Patent and Trademark Office, U.S. Department of Commerce, P.O. Box 1450, Alexandria, VA 22313-1450. DO NOT SEND FEES OR COMPLETED FORMS TO THIS ADDRESS. **SEND TO: Attention Certificate of Corrections Branch, Commissioner for Patents, P.O. Box 1450, Alexandria, VA 22313-1450.**

If you need assistance in completing the form, call 1-800-PTO-9199 and select option 2.

SPE RESPONSE FOR CERTIFICATE OF CORRECTION

Paper No.:20090401

DATE : April 04, 2009

TO SPE OF : ART UNIT 1655

SUBJECT : Request for Certificate of Correction on Patent No.: 7476405 B2

A response is requested with respect to the accompanying request for a certificate of correction.

Please complete this form and return with file, within **7** days to:
Certificates of Correction Branch - ST (South Tower) 9A22
Palm location **7590** - Tel. No. (703) 305-8309

With respect to the change(s) requested, correcting Office and/or Applicant's errors, should the patent read as shown in the certificate of correction? No new matter should be introduced, nor should the scope or meaning of the claims be changed.

Thank You For Your Assistance **Certificates of Correction Branch**

The request for issuing the above-identified correction(s) is hereby:

Note your decision on the appropriated box.

☒ **Approved** All changes apply.

☐ **Approved in Part** Specify below which changes **do not** apply.

☐ **Denied** State the reasons for denial below.

Comments:

/JON P WEBER/
Supervisory Patent Examiner, Art Unit 1657

UNITED STATES PATENT AND TRADEMARK OFFICE

UNITED STATES DEPARTMENT OF COMMERCE
United States Patent and Trademark Office
Address: COMMISSIONER FOR PATENTS
P.O. Box 1450
Alexandria, Virginia 22313-1450
www.uspto.gov

TROP, PRUNER & HU, P.C.
1616 S. VOSS ROAD, SUITE 750
HOUSTON, TX 77057-2631

Mail Date: 04/21/2010

Applicant	: Vinay B. Chikarmane	: DECISION ON REQUEST FOR
Patent Number	: 7582558	: RECALCULATION of PATENT
Issue Date	: 09/01/2009	: TERM ADJUSTMENT IN VIEW
Appliction No	: 11/486,871	: OF WYETH
Filed	: 07/14/2006	:
		:

The Patentee's Request for Recalculation is **DISMISSED.**

This Request is deemed ineligible for consideration for one or more of the following reasons:

(A). The patent for which PTA recalculation is requested is either a design or reissue application or is a reexamination proceeding;

(B). The patent for which PTA recalculation is requested resulted from a utility or plant application filed under 35 USC 111(a) before May 29, 2000 and no CPA filed in the application on/after May 29, 2000;

(C). The patent for which PTA recalculation is requested resulted from an international application in which the international filing date was before May 29, 2000 and no CPA filed in the application on/after May 29, 2000;

(D). The patent for which PTA recalculation is requested issued on/after March 2, 2010;

(E). The Request for Recalculation was filed more than 180 days after the grant date of the patent and the request was not filed within two months of a dismissal of a request for reconsideration of the of the patent term under 37 CFR 1.705(d);

(F). The Request for Recalculation is not solely limited to USPTO pre-Wyeth interpretation of 35 U.S.C. 154(b)(2)(A);

or

(G). A civil action was filed pursuant to 35 U.S.C. 154(b)(4)(A)concerning the same patent at issue in this request.

Patentee may file a reply to this decision dismissing the Request for Recalculation. Patentee must file such reply within one month or thirty days, whichever is longer, of the mail date of the decision dismissing the Request for Recalculation. No fee is required if patentee is asserting in the reply that the dismissal for ineligibility is improper.

Patentee should use document code PET.OP if electronically filing a reply to this dismissal. If the USPTO finds that the request was improperly deemed ineligible, the USPTO will mail applicant a recalculation determination.

Patentee should be aware that in order to preserve the right to review in the United States District Court for the District of Columbia of the USPTO patent term adjustment determination, patentee must ensure that he or she also take the steps required under 35 U.S.C. 154(b)(4)(A). Nothing in the request for recalculation should be construed as providing an alternative time frame for commencing a civil action under 35 U.S.C. 154 (b)(4)(A).

Any questions concerning this decision should be directed to the Office of Patent Legal Administration at 571-272-7702.

UNITED STATES PATENT AND TRADEMARK OFFICE

UNITED STATES DEPARTMENT OF COMMERCE
United States Patent and Trademark Office
Address: COMMISSIONER FOR PATENTS
P.O. Box 1450
Alexandria, Virginia 22313-1450
www.uspto.gov

Munck Carter/NSC
P.O. Drawer 800889
Dallas, TX 75380

Mail Date: 04/20/2010

Applicant	: Gregory J. Smith	: DECISION ON REQUEST FOR
Patent Number	: 7586064	: RECALCULATION of PATENT
Issue Date	: 09/08/2009	: TERM ADJUSTMENT IN VIEW
Appliction No	: 11/486,890	: OF WYETH AND NOTICE OF INTENT TO
Filed	: 07/13/2006	: ISSUE CERTIFICATE OF CORRECTION
		:

The Request for Recalculation is **GRANTED** to the extent indicated.

The patent term adjustment has been determined to be **276** days. The USPTO will *sua sponte* issue a certificate of correction reflecting the amount of PTA days determined by the recalculation.

Prior to the issuance of the certificate of correction, the USPTO will afford patentee an opportunity to be heard and request reconsideration. Accordingly, patentee has **one month or thirty (30) days**, whichever is longer, to file a request for reconsideration of this patent term adjustment calculation. See 35 U.S.C. 154(b)(3)(B)(ii) and 37 CFR 1.322(a)(4). No extensions of time will be granted under 37 CFR 1.136.

Patentee should use document code PET.OP if electronically filing a request for reconsideration of this patent term adjustment calculation. The patentee must also include the information required by 37 CFR 1.705(b)(2) and the fee required by 37 CFR 1.18(e). If patentee does not file a timely request for reconsideration of this patent term adjustment calculation including the information required by 37 CFR 1.705(b)(2) and the fee required by 37 CFR 1.18(e), the USPTO will issue a certificate of correction reflecting the PTA determination noted above.

Patentee should be aware that in order to preserve the right to review in the United States District Court for the District of Columbia of the USPTO patent term adjustment determination, patentee must ensure that he or she also take the steps required under 35 U.S.C. 154(b)(4)(A) in a timely manner. Nothing in the request for recalculation should be construed as providing an alternative time frame for commencing a civil action under 35 U.S.C. 154(b)(4)(A).

Any questions concerning this decision should be directed to the Office of Patent Legal Administration at 571-272-7702.

UNITED STATES PATENT AND TRADEMARK OFFICE

Commissioner for Patents
United States Patent and Trademark Office
P.O. Box 1450
Alexandria, VA 22313-1450
www.uspto.gov

LAW OFFICES OF ANDREW SCHROEDER
P.O. BOX 6731
SANTA MARIA CA 93454

COPY MAILED

DEC 0 2 2009

OFFICE OF PETITIONS

In re Application of	:	
Cole, Monty	:	DECISION ON PETITION
Application No. 11/486,947	:	TO WITHDRAW
Filed: July 15, 2006	:	FROM RECORD
Attorney Docket No. 1SQMC011	:	

This is a decision on the Request to Withdraw as attorney or agent of record under 37 C.F.R. § 1.36(b) filed September 8, 2009, which is being treated as a request to withdraw from employment in a proceeding before the Office under 37 C.F.R. § 10.40.

The request is **NOT APPROVED.**

A review of the file record indicates that the attorneys/agents associated with Customer Number 37351 do not have power of attorney in this patent application. Accordingly, the request to withdraw under 37 C.F.R. § 1.36(b) is not applicable.

As such, the change of correspondence address filed concurrently cannot be accepted because it was not signed by an attorney of record. See MPEP §§ 601.03 and 405. The Office will mail all future correspondence solely to the address of record.

All future communications from the Office will continue to be directed to the above-listed address until otherwise properly notified.

There is an outstanding Office action mailed October 23, 2009 which requires a reply. Failure to timely do so will result in abandonment of the instant application.

Telephone inquires concerning this decision should be directed to the undersigned at 571-272-3206.

Liana Walsh
Petitions Examiner
Office of Petitions

UNITED STATES PATENT AND TRADEMARK OFFICE

Commissioner for Patents
United States Patent and Trademark Office
P.O. Box 1450
Alexandria, VA 22313-1450
www.uspto.gov

DEWEY & LEBOEUF LLP
1101 NEW YORK AVENUE, NW
WASHINGTON, DC 20005

COPY MAILED

JUN 12 2008

OFFICE OF PETITIONS

In re Application of :
Rel S. Ambrozy et al :
Application No. 11/486,969 : ON PETITION
Filed: July 14, 2006 :
Attorney Docket No. 044126-001000 :

This is a decision on the petition under 37 CFR 1.313(a), filed June 4, 2008, to withdraw the above-identified application from issue.

The petition is **DISMISSED**.

37 CFR 1.313(a) states, in part:

> Applications may be withdrawn from issue for further action at the initiative of the Office or upon petition by the applicant. To request that the Office withdraw an application from issue, applicant must file a petition under this section including the fee set forth in § 1.17(h) and a showing of good and sufficient reasons why withdrawal of the application from issue is necessary.

As such, a grantable petition requesting withdrawal of an application from issue must be accompanied by: (1) a showing of good and sufficient reasons why withdrawal of the application from issue is necessary; and (2) the requisite petition fee under 37 CFR 1.17(h). The petition fee of $130 has been charged to petitioner's deposit account.

However, the petition does not set forth good and sufficient reasons as to why withdrawal of the application from issue is necessary.

Following the part of 37 CFR 1.313(a) cited above, 37 CFR 1.313(a) goes on to state:

> A petition under this section is not required if a request for continued examination under § 1.114 is filed prior to payment of the issue fee.

For the above reasons, this application will not be withdrawn from issue under the provisions of 37 CFR 1.313(a).

A review of the file record discloses that a Notice of Allowance and Fee(s) Due was mailed on March 31, 2008, with the issue fee being due on or before June 30, 2008. The issue fee in this case has not been paid.

Any inquiries regarding this decision should be directed to Irvin Dingle at (571) 272-3210.

Irvin Dingle
Petitions Examiner
Office of Petitions

UNITED STATES PATENT AND TRADEMARK OFFICE

UNITED STATES DEPARTMENT OF COMMERCE
United States Patent and Trademark Office
Address: COMMISSIONER FOR PATENTS
P.O. Box 1450
Alexandria, Virginia 22313-1450
www.uspto.gov

HAMILTON, BROOK, SMITH & REYNOLDS, P.C.
530 VIRGINIA ROAD
P.O. BOX 9133
CONCORD, MA 01742-9133

Mail Date: 04/21/2010

Applicant	: Christina M. Lampe-Onnerud	: DECISION ON REQUEST FOR
Patent Number	: 7656125	: RECALCULATION of PATENT
Issue Date	: 02/02/2010	: TERM ADJUSTMENT IN VIEW
Appliction No	: 11/486,970	: OF WYETH AND NOTICE OF INTENT TO
Filed	: 07/14/2006	: ISSUE CERTIFICATE OF CORRECTION
		:

The Request for Recalculation is **GRANTED** to the extent indicated.

The patent term adjustment has been determined to be **263** days. The USPTO will *sua sponte* issue a certificate of correction reflecting the amount of PTA days determined by the recalculation.

Prior to the issuance of the certificate of correction, the USPTO will afford patentee an opportunity to be heard and request reconsideration. Accordingly, patentee has **one month or thirty (30) days**, whichever is longer, to file a request for reconsideration of this patent term adjustment calculation. See 35 U.S.C. 154(b)(3)(B)(ii) and 37 CFR 1.322(a)(4). No extensions of time will be granted under 37 CFR 1.136.

Patentee should use document code PET.OP if electronically filing a request for reconsideration of this patent term adjustment calculation. The patentee must also include the information required by 37 CFR 1.705(b)(2) and the fee required by 37 CFR 1.18(e). If patentee does not file a timely request for reconsideration of this patent term adjustment calculation including the information required by 37 CFR 1.705(b)(2) and the fee required by 37 CFR 1.18(e), the USPTO will issue a certificate of correction reflecting the PTA determination noted above.

Patentee should be aware that in order to preserve the right to review in the United States District Court for the District of Columbia of the USPTO patent term adjustment determination, patentee must ensure that he or she also take the steps required under 35 U.S.C. 154(b)(4)(A) in a timely manner. Nothing in the request for recalculation should be construed as providing an alternative time frame for commencing a civil action under 35 U.S.C. 154(b)(4)(A).

Any questions concerning this decision should be directed to the Office of Patent Legal Administration at 571-272-7702.

UNITED STATES PATENT AND TRADEMARK OFFICE

Commissioner for Patents
United States Patent and Trademark Office
P.O. Box 1450
Alexandria, VA 22313-1450
www.uspto.gov

HUSCH BLACKWELL SANDERS, LLP
HUSCH BLACKWELL SANDERS LLP WELSH & KATZ
120 S RIVERSIDE PLAZA
22ND FLOOR
CHICAGO IL 60606

MAILED

JUN 30 2010

OFFICE OF PETITIONS

In re Application of	:	
Shunpei Yamazaki et al	:	
Application No. 11/487,010	:	DECISION GRANTING PETITION
Filed: July 14, 2006	:	UNDER 37 CFR 1.313(c)(2)
Attorney Docket No. 0553-0174.02	:	

This is a decision on the petition under 37 CFR 1.313(c)(2), filed June 29, 2010, to withdraw the above-identified application from issue after payment of the issue fee.

The petition is **GRANTED**.

The above-identified application is withdrawn from issue for consideration of a submission under 37 CFR 1.114 (request for continued examination). *See* 37 CFR 1.313(c)(2).

Petitioner is advised that the issue fee paid on June 4, 2010 cannot be refunded. If, however, this application is again allowed, petitioner may request that it be applied towards the issue fee required by the new Notice of Allowance.[1]

Telephone inquiries should be directed to the undersigned at (571) 272-3208.

This application is being referred to Technology Center AU 2826 for processing of the request for continued examination under 37 CFR 1.114 and for consideration of the concurrently filed IDS.

/Karen Creasy/
Karen Creasy
Petitions Examiner
Office of Petitions

[1] *The request to apply the issue fee to the new Notice may be satisfied by completing and returning the new Part B – Fee(s) Transmittal Form (along with any balance due at the time of submission). Petitioner is advised that the Issue Fee Transmittal Form must be completed and timely submitted to avoid abandonment of the application.*

UNITED STATES PATENT AND TRADEMARK OFFICE

Commissioner for Patents
United States Patent and Trademark Office
P.O. Box 1450
Alexandria, VA 22313-1450
www.uspto.gov

L.C. BEGIN & ASSOCIATES, PLLC
510 HIGHLAND AVENUE
PMB 403
MILFORD, MI 48381

MAILED

MAY 28 2009

OFFICE OF PETITIONS

In re Application of :
Craig J. Kelly :
Application No. 11/487,066 : DECISION ON PETITION
Filed: July 14, 2006 : TO WITHDRAW
Attorney Docket No. 5803-00004 : FROM RECORD
:

This is a decision on the Request to Withdraw as attorney or agent of record under 37 C.F.R. § 1.36(b), filed April 10, 2009.

The request is **NOT APPROVED**.

A grantable request to withdraw as attorney/agent of record must be signed by every attorney/agent seeking to withdraw or contain a clear indication that one attorney is signing on behalf of another/others.

The request cannot be approved because the petitioner was not appointed by customer number. In order to withdraw by customer number practitioners must be appointed by customer number.

All future communications from the Office will continue to be directed to the above-listed address until otherwise notified by applicant.

Telephone inquiries concerning this decision should be directed to undersigned at 571-272-1642. All other inquiries concerning the examination or status of this application should be directed to the Technology Center.

/AMW/
April M. Wise
Petitions Examiner
Office of Petitions

cc: TI TECHNOLOGIES, LLC
8572 PAULINA AVENUE
GORSSE ISLE, MI 48138

UNITED STATES PATENT AND TRADEMARK OFFICE

Commissioner for Patents
United States Patent and Trademark Office
P.O. Box 1450
Alexandria, VA 22313-1450
www.uspto.gov

CANTOR COLBURN, LLP
20 CHURCH STREET, 22ND FLOOR
HARTFORD, CT 06103

MAILED

APR 0 2 2009

OFFICE OF PETITIONS

In re Application of
Jeong-il **KIM, et al.**
Application No. 11/487,075
Filed: July 14, 2006
Attorney Docket No. HAA-0071

DECISION GRANTING PETITION
UNDER 37 CFR 1.313(c)(2)

This is a decision on the petition under 37 CFR 1.313(c)(2), filed March 31, 2009, to withdraw the above-identified application from issue after payment of the issue fee.

The petition is **GRANTED**.

The above-identified application is withdrawn from issue for consideration of a submission under 37 CFR 1.114 (request for continued examination). See 37 CFR 1.313(c)(2).

Petitioner is advised that the issue fee paid on February 27, 2009 cannot be refunded. If, however, this application is again allowed, petitioner may request that it be applied towards the issue fee required by the new Notice of Allowance.[1]

Telephone inquiries should be directed to the undersigned at (571) 272-7253.

This application is being referred to Technology Center AU 2883 for processing of the request for continued examination under 37 CFR 1.114 and for consideration of the concurrently filed amendment.

/Monica A. Graves/
Petitions Examiner, Office of Petitions

[1] *The request to apply the issue fee to the new Notice may be satisfied by completing and returning the new Part B – Fee(s) Transmittal Form (along with any balance due at the time of submission). Petitioner is advised that the Issue Fee Transmittal Form must be completed and timely submitted to avoid abandonment of the application.*

UNITED STATES PATENT AND TRADEMARK OFFICE

UNITED STATES DEPARTMENT OF COMMERCE
United States Patent and Trademark Office
Address: COMMISSIONER FOR PATENTS
P.O. Box 1450
Alexandria, Virginia 22313-1450
www.uspto.gov

CANTOR COLBURN, LLP
20 Church Street
22nd Floor
Hartford, CT 06103

Mail Date: 04/20/2010

Applicant	: Jeong Il Kim	: DECISION ON REQUEST FOR
Patent Number	: 7586550	: RECALCULATION of PATENT
Issue Date	: 09/08/2009	: TERM ADJUSTMENT IN VIEW
Appliction No	: 11/487,075	: OF WYETH AND NOTICE OF INTENT TO
Filed	: 07/14/2006	: ISSUE CERTIFICATE OF CORRECTION
		:

The Request for Recalculation is **GRANTED** to the extent indicated.

The patent term adjustment has been determined to be **123** days. The USPTO will *sua sponte* issue a certificate of correction reflecting the amount of PTA days determined by the recalculation.

Prior to the issuance of the certificate of correction, the USPTO will afford patentee an opportunity to be heard and request reconsideration. Accordingly, patentee has **one month or thirty (30) days**, whichever is longer, to file a request for reconsideration of this patent term adjustment calculation. See 35 U.S.C. 154(b)(3)(B)(ii) and 37 CFR 1.322(a)(4). No extensions of time will be granted under 37 CFR 1.136.

Patentee should use document code PET.OP if electronically filing a request for reconsideration of this patent term adjustment calculation. The patentee must also include the information required by 37 CFR 1.705(b)(2) and the fee required by 37 CFR 1.18(e). If patentee does not file a timely request for reconsideration of this patent term adjustment calculation including the information required by 37 CFR 1.705(b)(2) and the fee required by 37 CFR 1.18(e), the USPTO will issue a certificate of correction reflecting the PTA determination noted above.

Patentee should be aware that in order to preserve the right to review in the United States District Court for the District of Columbia of the USPTO patent term adjustment determination, patentee must ensure that he or she also take the steps required under 35 U.S.C. 154(b)(4)(A) in a timely manner. Nothing in the request for recalculation should be construed as providing an alternative time frame for commencing a civil action under 35 U.S.C. 154(b)(4)(A).

Any questions concerning this decision should be directed to the Office of Patent Legal Administration at 571-272-7702.

OIPE IAP61
JUL 06 2009
PATENT & TRADEMARK OFFICE

PATENT

Case Docket No. **RYUKA.009C1**
Date: June 25, 2009

IN THE UNITED STATES PATENT AND TRADEMARK OFFICE

CRC

Applicant(s)	:	Kentaro Fukushima et al.
Patent No.	:	7,518,379
App. No.	:	11/487,091
Filed	:	July 14, 2006
For	:	A CONNECTION UNIT, A BOARD FOR MOUNTING A DEVICE UNDER TEST, A PROBE CARD AND A DEVICE INTERFACING PART
Examiner	:	Tung X. Nguyen
Art Unit	:	2829

I hereby certify that this correspondence and all marked attachments are being deposited with the United States Postal Service as first class mail in an envelope addressed to: Commissioner for Patents, P.O. Box 1450, Alexandria, VA 22313-1450, on

June 25, 2009
(Date)

Yasuo Muramatsu, Reg. No. 38,684

TRANSMITTAL LETTER

COMMISSIONER FOR PATENTS
ALEXANDRIA, VA 22313-1450

Dear Sir:

Transmitted herewith is a response to office action in the above-identified utility application.

() An extension of time to respond for * month(s) is hereby requested.

Time Extension Fee:

() one month ($130 large entity)
() two months ($490 large entity)
() three months ($1110 large entity)

Certificate
JUL 08 2009
of Correction

Enclosed are:

(X) Request for certificate of correction.
Please correct the inventor's name from "Kentaro Pukushima" to --Kentaro Fukushima--.

(X) Return prepaid postcard.

SEND ALL CORRESPONDENCE TO:

MURAMATSU & ASSOCIATES
114 Pacifica
Suite 225
Irvine, CA 92618
Tel: 949-753-1127

Signature

Yasuo Muramatsu
Printed Name

38,684
Registration Number

TRS-RY09.1C6
062509

PTO/SB/44 (09-07)
Approved for use through 08/31/2010. OMB 0651-0033
U.S. Patent and Trademark Office; U.S. DEPARTMENT OF COMMERCE
Under the Paperwork Reduction Act of 1995, no persons are required to respond to a collection of information unless it displays a valid OMB control number.
(Also Form PTO-1050)

UNITED STATES PATENT AND TRADEMARK OFFICE
CERTIFICATE OF CORRECTION

PATENT NO. : 7,518,379

APPLICATION NO.: 11/487,091

ISSUE DATE : April 14, 2009

INVENTOR(S) : Fukushima et al.

It is certified that an error appears or errors appear in the above-identified patent and that said Letters Patent is hereby corrected as shown below:

(75) Inventors: Kentaro Fukushima, Tokyo (JP)
Masashi Hoshino, Tokyo (JP)

MAILING ADDRESS OF SENDER (Please do not use customer number below):

Muramatsu & Associates
114 Pacifica, Suite 310
Irvine, CA 92618, U.S.A.

This collection of information is required by 37 CFR 1.322, 1.323, and 1.324. The information is required to obtain or retain a benefit by the public which is to file (and by the USPTO to process) an application. Confidentiality is governed by 35 U.S.C. 122 and 37 CFR 1.14. This collection is estimated to take 1.0 hour to complete, including gathering, preparing, and submitting the completed application form to the USPTO. Time will vary depending upon the individual case. Any comments on the amount of time you require to complete this form and/or suggestions for reducing this burden, should be sent to the Chief Information Officer, U.S. Patent and Trademark Office, U.S. Department of Commerce, P.O. Box 1450, Alexandria, VA 22313-1450. DO NOT SEND FEES OR COMPLETED FORMS TO THIS ADDRESS. **SEND TO: Attention Certificate of Corrections Branch, Commissioner for Patents, P.O. Box 1450, Alexandria, VA 22313-1450.**

If you need assistance in completing the form, call 1-800-PTO-9199 and select option 2.

UNITED STATES PATENT AND TRADEMARK OFFICE

Commissioner for Patents
United States Patent and Trademark Office
P.O. Box 1450
Alexandria, VA 22313-1450
www.uspto.gov

HELLER EHRMAN LLP
4350 LA JOLLA VILLAGE DRIVE #700
7TH FLOOR
SAN DIEGO CA 92122

COPY MAILED

JAN 11 2007

OFFICE OF PETITIONS

In re Application of :
Teuvo A. Haapalahti et al. :
Application No. 11/487,092 : DECISION ON PETITION
Filed: July 13, 2006 : TO WITHDRAW
Attorney Docket No. 42792-6196B : FROM RECORD
:

This is a decision on the Request to Withdraw as attorney or agent of record under 37 C.F.R. § 1.36(b), filed October 3, 2006.

The request is **NOT APPROVED**.

A grantable request to withdraw as attorney/agent of record must be signed by every attorney/agent seeking to withdraw or contain a clear indication that one attorney is signing on behalf of another/others. A request to withdraw will not be approved unless at least 30 (thirty) days would remain between the date of approval and the later of the expiration date of a time to file a response or the expiration date of the maximum time period which can be extended under 37 C.F.R. § 1.136(a).

The Office cannot approve the request at this time since the reasons provided do not meet any of the conditions under the mandatory or permissive categories enumerated in 37 CFR 10.40. Section 10.40 of Title 37 of the Code of Federal Regulation states, "[a] practitioner shall not withdraw from employment in a proceeding before the Office without permission from the Office[.]" More specifically, 37 CFR 10.40 states, "[i]f paragraph (b) of this section is not applicable, a practitioner may not request permission to withdraw in matter pending before the Office unless such request or such withdrawal is" for one the permissive reasons listed in 37 CFR 10.40(c).

The reasons set forth in the request, ***instructions from the assignee, Powerwave Technologies, Inc., to transfer application to new counsel***, do not meet any the conditions set forth in 37 CFR 10.40 because in order to request or take action in a patent matter, the assignee must establish its ownership of the patent to the satisfaction of the Director. In this regard, a Statement under 37 CFR 3.73(b) must be filed that includes either: (i) documentary evidence of a chain of title from the original owner to the assignee (*e.g.*, copy of an executed assignment), and a statement affirming that the documentary evidence of the chain of title from the original owner to the

assignee was or concurrently is being submitted for recordation pursuant to § 3.11; or (ii) a statement specifying where documentary evidence of a chain of title from the original owner to the assignee is recorded in the assignment records of the Office (*e.g.*, reel and frame number).

All future communications from the Office will continue to be directed to the above-listed address until otherwise notified by applicant.

Telephone inquiries concerning this decision should be directed to Terri Williams at 571-272-2991.

Terri Williams
Petitions Examiner
Office of Petitions

cc: **David Hently**
Myers Dawes Andras & Sherman
19900 MacArthur Blvd., Suite 1150
Irvine, CA 92612

UNITED STATES PATENT AND TRADEMARK OFFICE

UNITED STATES DEPARTMENT OF COMMERCE
United States Patent and Trademark Office
Address: COMMISSIONER FOR PATENTS
P.O. Box 1450
Alexandria, Virginia 22313-1450
www.uspto.gov

WEINGARTEN, SCHURGIN, GAGNEBIN & LEBOVICI LLP
TEN POST OFFICE SQUARE
BOSTON, MA 02109

Mail Date: 04/27/2010

Applicant	: Hyuk-Jeen Suh	: DECISION ON REQUEST FOR
Patent Number	: 7667686	: RECALCULATION of PATENT
Issue Date	: 02/23/2010	: TERM ADJUSTMENT IN VIEW
Application No	: 11/487,108	: OF WYETH AND NOTICE OF INTENT TO
Filed	: 07/14/2006	: ISSUE CERTIFICATE OF CORRECTION
		:

The Request for Recalculation is **GRANTED** to the extent indicated.

The patent term adjustment has been determined to be **893** days. The USPTO will *sua sponte* issue a certificate of correction reflecting the amount of PTA days determined by the recalculation.

Prior to the issuance of the certificate of correction, the USPTO will afford patentee an opportunity to be heard and request reconsideration. Accordingly, patentee has **one month or thirty (30) days**, whichever is longer, to file a request for reconsideration of this patent term adjustment calculation. See 35 U.S.C. 154(b)(3)(B)(ii) and 37 CFR 1.322(a)(4). No extensions of time will be granted under 37 CFR 1.136.

Patentee should use document code PET.OP if electronically filing a request for reconsideration of this patent term adjustment calculation. The patentee must also include the information required by 37 CFR 1.705(b)(2) and the fee required by 37 CFR 1.18(e). If patentee does not file a timely request for reconsideration of this patent term adjustment calculation including the information required by 37 CFR 1.705(b)(2) and the fee required by 37 CFR 1.18(e), the USPTO will issue a certificate of correction reflecting the PTA determination noted above.

Patentee should be aware that in order to preserve the right to review in the United States District Court for the District of Columbia of the USPTO patent term adjustment determination, patentee must ensure that he or she also take the steps required under 35 U.S.C. 154(b)(4)(A) in a timely manner. Nothing in the request for recalculation should be construed as providing an alternative time frame for commencing a civil action under 35 U.S.C. 154(b)(4)(A).

Any questions concerning this decision should be directed to the Office of Patent Legal Administration at 571-272-7702.

UNITED STATES PATENT AND TRADEMARK OFFICE

UNITED STATES DEPARTMENT OF COMMERCE
United States Patent and Trademark Office
Address: COMMISSIONER FOR PATENTS
P.O. Box 1450
Alexandria, Virginia 22313-1450
www.uspto.gov

THE LAW OFFICES OF JOHN C. SCOTT, LLC
C/O INTELLEVELE, LLC
P. O. BOX 52050
MINNEAPOLIS, MN 55402

Mail Date: 05/13/2010

Applicant	: Ozgur Oyman	: DECISION ON REQUEST FOR
Patent Number	: 7623589	: RECALCULATION of PATENT
Issue Date	: 11/24/2009	: TERM ADJUSTMENT IN VIEW
Application No	: 11/487,115	: OF WYETH AND NOTICE OF INTENT TO
Filed	: 07/14/2006	: ISSUE CERTIFICATE OF CORRECTION
		:

The Request for Recalculation is **GRANTED** to the extent indicated.

The patent term adjustment has been determined to be **802** days. The USPTO will *sua sponte* issue a certificate of correction reflecting the amount of PTA days determined by the recalculation.

Prior to the issuance of the certificate of correction, the USPTO will afford patentee an opportunity to be heard and request reconsideration. Accordingly, patentee has **one month or thirty (30) days**, whichever is longer, to file a request for reconsideration of this patent term adjustment calculation. See 35 U.S.C. 154(b)(3)(B)(ii) and 37 CFR 1.322(a)(4). No extensions of time will be granted under 37 CFR 1.136.

Patentee should use document code PET.OP if electronically filing a request for reconsideration of this patent term adjustment calculation. The patentee must also include the information required by 37 CFR 1.705(b)(2) and the fee required by 37 CFR 1.18(e). If patentee does not file a timely request for reconsideration of this patent term adjustment calculation including the information required by 37 CFR 1.705(b)(2) and the fee required by 37 CFR 1.18(e), the USPTO will issue a certificate of correction reflecting the PTA determination noted above.

Patentee should be aware that in order to preserve the right to review in the United States District Court for the District of Columbia of the USPTO patent term adjustment determination, patentee must ensure that he or she also take the steps required under 35 U.S.C. 154(b)(4)(A) in a timely manner. Nothing in the request for recalculation should be construed as providing an alternative time frame for commencing a civil action under 35 U.S.C. 154(b)(4)(A).

Any questions concerning this decision should be directed to the Office of Patent Legal Administration at 571-272-7702.

UNITED STATES PATENT AND TRADEMARK OFFICE

Commissioner for Patents
United States Patent and Trademark Office
P.O. Box 1450
Alexandria, VA 22313-1450
www.uspto.gov

COPY MAILED

DEC 04 2009

OFFICE OF PETITIONS

HOFFMANN-LA ROCHE INC.
PATENT LAW DEPARTMENT
340 KINGSLAND STREET
NUTLEY, NJ 07110

In re Application of Cesura et al. :
Application No. 11/487,119 : On Application For
Filing Date: July 14, 2006 : Patent Term Adjustment
Attorney Docket No. 21727 US1 :

This is in response to the "Application for Patent Term Adjustment Including Request for Reconsideration Under 37 C.F.R. § 1.705(b)" filed September 30, 2009. Applicants submit the correct patent term adjustment to be indicated on the patent is eight hundred seventy-eight (878) days, not six hundred eighty-four (684) days as calculated by the Office as of the mailing of the initial determination of patent term adjustment. Applicants request this correction solely on the basis that the Office will take in excess of three years to issue this patent.

As the instant application for patent term adjustment requests reconsideration of the patent term adjustment as it relates to the Office's failure to issue the patent within 3 years of the filing date, the application for patent term adjustment under 37 CFR 1.705(b) is **DISMISSED as PREMATURE**.

Knowledge of the actual date the patent issues is required to calculate the amount, if any, of additional patent term patentee is entitled to for Office failure to issue the patent within 3 years. See 37 CFR 1.702(b). (This is true even where a request for continued examination (RCE) was filed). The computer will not undertake the § 1.702(b) calculation until the actual date of issuance of the patent has been determined. Likewise, the computer will not calculate any further Office delay under § 1.702(a)(4) or applicant delay under § 1.704(c)(10) until the actual date of issuance of the patent has been determined. As such, the Office can not make a determination on the correctness of the patent term adjustment until the patent has issued.

Requesting reconsideration of the patent term adjustment to be indicated on the patent under 37 CFR 1.705(b) based on the initial determination of patent term adjustment and a projected issuance date of the patent (or even the filing date of the request for continued examination) is premature. Accordingly, it is appropriate to dismiss as premature such a request.

Rather than file an application for patent term adjustment under 37 CFR 1.705(b) contesting the 37 CFR 1.702(b) calculation at the time of the mailing of the notice of allowance, an applicant may wait until the time of the issuance of the patent and file a request for reconsideration of the patent term adjustment pursuant to 37 CFR 1.705(d). As the USPTO does not calculate the

amount of time earned pursuant to 37 CFR 1.702(b) until the time of the issuance of the patent, the Office will consider any request for reconsideration of the patent term adjustment due to an error in the calculation of 37 CFR 1.702(b) to be timely if the request for reconsideration is filed within two months of the issuance of the patent. However, as to all other bases for contesting the initial determination of patent term adjustment received with the notice of allowance, applicant must timely file an application for patent term adjustment prior to the payment of the issue fee.[1]

The Office acknowledges submission of the $200.00 fee set forth in 37 CFR 1.18(e) for consideration of the application for patent term adjustment under 37 CFR 1.705(b).

Any request for reconsideration of the patent term adjustment indicated on the patent must be timely filed within 2 months after issuance pursuant to 37 CFR 1.705(d) and must include payment of the required fee under 37 CFR 1.18(e).

The Office of Data Management has been advised of this decision. This application is being referred to the Office of Data Management for issuance of the patent.

Telephone inquiries regarding this communication should be directed to Petitions Attorney Steven Brantley at (571) 272-3203.

Nancy Johnson
Senior Petitions Attorney
Office of Petitions

[1] For example, if applicant disputes both the calculation of patent term adjustment under 37 CFR 1.702(a)(1) for Office failure to mail a first Office action or notice of allowance not later than fourteen months after the date on which the application was filed and under 37 CFR 1.702(b) for Office failure to issue a patent within three years of the actual filing date of the application, then applicant must still timely file an application for patent term adjustment prior to the payment of the issue fee to contest the calculation of Office delay in issuing a first Office action or notice of allowance. See 37 CFR 1.705(b) and 35 U.S.C. 154(b)(3)(B). A dispute as to the calculation of the §1.702(a)(1) period raised on request for reconsideration of patent term adjustment under 37 CFR 1.705(d) will be dismissed as untimely filed.

UNITED STATES PATENT AND TRADEMARK OFFICE

UNITED STATES DEPARTMENT OF COMMERCE
United States Patent and Trademark Office
Address: COMMISSIONER FOR PATENTS
P.O. Box 1450
Alexandria, Virginia 22313-1450
www.uspto.gov

HOFFMANN-LA ROCHE INC.
PATENT LAW DEPARTMENT
340 KINGSLAND STREET
NUTLEY, NJ 07110

Mail Date: 04/21/2010

Applicant	: Andrea Cesura	: DECISION ON REQUEST FOR
Patent Number	: 7642283	: RECALCULATION of PATENT
Issue Date	: 01/05/2010	: TERM ADJUSTMENT IN VIEW
Appliction No	: 11/487,119	: OF WYETH AND NOTICE OF INTENT TO
Filed	: 07/14/2006	: ISSUE CERTIFICATE OF CORRECTION
		:

The Request for Recalculation is **GRANTED** to the extent indicated.

The patent term adjustment has been determined to be **844** days. The USPTO will *sua sponte* issue a certificate of correction reflecting the amount of PTA days determined by the recalculation.

Prior to the issuance of the certificate of correction, the USPTO will afford patentee an opportunity to be heard and request reconsideration. Accordingly, patentee has **one month or thirty (30) days**, whichever is longer, to file a request for reconsideration of this patent term adjustment calculation. See 35 U.S.C. 154(b)(3)(B)(ii) and 37 CFR 1.322(a)(4). No extensions of time will be granted under 37 CFR 1.136.

Patentee should use document code PET.OP if electronically filing a request for reconsideration of this patent term adjustment calculation. The patentee must also include the information required by 37 CFR 1.705(b)(2) and the fee required by 37 CFR 1.18(e). If patentee does not file a timely request for reconsideration of this patent term adjustment calculation including the information required by 37 CFR 1.705(b)(2) and the fee required by 37 CFR 1.18(e), the USPTO will issue a certificate of correction reflecting the PTA determination noted above.

Patentee should be aware that in order to preserve the right to review in the United States District Court for the District of Columbia of the USPTO patent term adjustment determination, patentee must ensure that he or she also take the steps required under 35 U.S.C. 154(b)(4)(A) in a timely manner. Nothing in the request for recalculation should be construed as providing an alternative time frame for commencing a civil action under 35 U.S.C. 154(b)(4)(A).

Any questions concerning this decision should be directed to the Office of Patent Legal Administration at 571-272-7702.

UNITED STATES PATENT AND TRADEMARK OFFICE

Commissioner for Patents
United States Patent and Trademark Office
P.O. Box 1450
Alexandria, VA 22313-1450
www.uspto.gov

COPY MAILED

NOV 07 2007

OFFICE OF PETITIONS

CECARI AND MCKENNA, LLP
88 BLACK FALCON AVENUE
BOSTON, MA 02210

In re Application of :
Robert A. Fawls et al. :
Application No. 11/487,129 : DECISION ON PETITION
Filed: July 14, 2006 : TO MAKE SPECIAL UNDER
Attorney Docket No. 107064-0001 : 37 CFR 1.102(c)(1)
:

This is a decision on the petition under 37 CFR 1.102(c)(1), filed October 16, 2007, to make the above-identified application special based on applicant's age as set forth in M.P.E.P. § 708.02, Section IV.

The petition is **GRANTED**.

A grantable petition to make an application special under 37 CFR 1.102(c)(1) and MPEP § 708.02, Section IV: Applicant's Age must be accompanied by evidence showing that at least one of the applicants is 65 years of age, or more, such as a birth certificate or a statement by applicant. No fee is required

The instant petition includes a photocopy of applicant's birth certificate. Accordingly, the above-identified application has been accorded "special" status.

Telephone inquiries concerning this decision should be directed to the undersigned at 571-272-4618.

All other inquiries concerning either the examination or status of the application should be directed to the Technology Center.

The application is being forwarded to the Technology Center Art Unit 3623 for action on the merits commensurate with this decision.

Kimberly Inabinet
Petitions Examiner
Office of Petitions

UNITED STATES PATENT AND TRADEMARK OFFICE

Commissioner for Patents
United States Patent and Trademark Office
P.O. Box 1450
Alexandria, VA 22313-1450
www.uspto.gov

PROTEOTECH, INC.
SUITE 114
1818 WESTLAKE AVENUE
SEATTLE WA 98109

COPY MAILED

AUG 27 2007

OFFICE OF PETITIONS

In re Application of :
Nguyen et al. :
Application No. 11/487,149 : DECISION GRANTING PETITION
Filed: July 14, 2006 :
Attorney Docket No. PROTEO.P08CID1 :

This is a decision on the "Petition for Review of Date of Deposit 37 CFR 1.53(b)" filed July 17, 2007 requesting to accept figures 5A-5B and 6A-6D as part of the original disclosure.

The application was filed on July 14, 2006. However, on May 23, 2007, the Office of Initial Patent Examination (OIPE) mailed a Notice to File Missing Parts in a Nonprovisional Application. The Notice to File Missing Parts contained a Notice Of Omitted Item(s) "Notice" stating that the application had been accorded a filing date of July 14, 2006, but figures 5A-5B, 6A-6D as described in the specification appeared to have been omitted.

In response, the present petition was filed wherein Petitioner contends figures 5A-5B, 6A-6D were filed on July 14, 2006. In support, the petition is accompanied by a copy of applicants' return postcard receipt which lists "20 sheets of drawings (Figures 1-17)". The petition is further accompanied by a copy of figures 5A-5B, 6A-6D.

Applicants' postcard receipt is prima facie evidence that at least 20 sheets of drawings including figures 5A-5B, 6A-6D as described in the specification were received on July 14, 2006. The Office is in receipt of only 18 pages, which does not include figures 5A-5B, 6A-6D. Therefore, it is concluded that 20 pages of drawings including figures 5A-5B, 6A-6D were received on July 14, 2006, as shown in counsel's file, and later misplaced in the office.

The petition is Granted to the extent indicated above. The $400.00 petition fee will be refunded.

Figures 5A-5B, 6A-6D supplied on July 17, 2007, will be used for processing and examination purposes.

If Petitioner desires to receive future correspondence regarding this application, the appropriate change of correspondence address must be submitted. A courtesy copy of this decision will be

mailed to Petitioner. However, all future correspondence will be directed to the address of record until such time as appropriate instructions are received to the contrary.

The application will be returned to the Office of Initial Patent Examination for further processing with a **filing date of July 14, 2006**, using the drawings submitted on July 14, 2006 and substitute figures 5A-5B, 6A-6D supplied with the petition on July 17, 2007.

Telephone inquiries specific to this matter should be directed to the undersigned at (571) 272 -3215.

Charlema R. Grant

Charlema R. Grant
Petitions Attorney
Office of Petitions

Cc: ProteoTech, Inc.
12040 115th Avenue N.E.
Kirkland, WA 98034

UNITED STATES PATENT AND TRADEMARK OFFICE

Commissioner for Patents
United States Patent and Trademark Office
P.O. Box 1450
Alexandria, VA 22313-1450
www.uspto.gov

MAILED

JUN 0 8 2009

OFFICE OF PETITIONS

MINTZ, LEVIN, COHN, FERRIS, GLOVSKY AND POPEO, P.C
ONE FINANCIAL CENTER
BOSTON MA 02111

In re Application of
Brian Graves et al.
Application No. 11/487,159
Filed: July 14, 2006
Attorney Docket No. 37530-530001US

DECISION ON PETITION
TO WITHDRAW
FROM RECORD

This is a decision on the Request to Withdraw as attorney or agent of record under 37 C.F.R. § 1.36(b), filed March 4, 2009.

The request is **APPROVED**.

A grantable request to withdraw as attorney/agent of record must be signed by every attorney/agent seeking to withdraw or contain a clear indication that one attorney is signing on behalf of another/others.

The request was signed by Fred C. Hernandez on behalf of all attorneys of record who are associated with Customer No. 64046.

All attorneys/agents listed in the Customer No. 64046 have been withdrawn.

Applicant is reminded that there is no attorney of record at this time.

All future correspondence will be directed to the Assignee Beme International, LLC at the address indicated in the request.

There is an outstanding Office action mailed December 26, 2008, that requires a reply from the applicant.

Telephone inquiries concerning this decision should be directed to JoAnne Burke at (571)272-4584.

Ramesh Krishnamurthy
Petitions Examiner
Office of Petitions

cc: Beme International, LLC
7333 Ronson Road
San Diego, CA 92111

UNITED STATES PATENT AND TRADEMARK OFFICE

UNITED STATES DEPARTMENT OF COMMERCE
United States Patent and Trademark Office
Address: COMMISSIONER FOR PATENTS
P.O. Box 1450
Alexandria, Virginia 22313-1450
www.uspto.gov

APPLICATION NUMBER	FILING OR 371(C) DATE	FIRST NAMED APPLICANT	ATTY. DOCKET NO./TITLE
11/487,159	07/14/2006	Brian Graves	37530-530001US

CONFIRMATION NO. 4763

64046
MINTZ, LEVIN, COHN, FERRIS, GLOVSKY AND POPEO, P.C
ONE FINANCIAL CENTER
BOSTON, MA 02111

POWER OF ATTORNEY NOTICE

OC000000036279636

Date Mailed: 06/03/2009

NOTICE REGARDING CHANGE OF POWER OF ATTORNEY

This is in response to the Power of Attorney filed 03/04/2009.

- The withdrawal as attorney in this application has been accepted. Future correspondence will be mailed to the new address of record. 37 CFR 1.33.

/jlburke/

Office of Data Management, Application Assistance Unit (571) 272-4000, or (571) 272-4200, or 1-888-786-0101

UNITED STATES PATENT AND TRADEMARK OFFICE

UNITED STATES DEPARTMENT OF COMMERCE
United States Patent and Trademark Office
Address: COMMISSIONER FOR PATENTS
P.O. Box 1450
Alexandria, Virginia 22313-1450
www.uspto.gov

ALLEMAN HALL MCCOY RUSSELL & TUTTLE LLP
806 SW BROADWAY
SUITE 600
PORTLAND, OR 97205-3335

Mail Date: 04/21/2010

Applicant	: William A. Barrow	: DECISION ON REQUEST FOR
Patent Number	: 7623217	: RECALCULATION of PATENT
Issue Date	: 11/24/2009	: TERM ADJUSTMENT IN VIEW
Appliction No	: 11/487,174	: OF WYETH AND NOTICE OF INTENT TO
Filed	: 07/14/2006	: ISSUE CERTIFICATE OF CORRECTION
		:

The Request for Recalculation is **GRANTED** to the extent indicated.

The patent term adjustment has been determined to be **699** days. The USPTO will *sua sponte* issue a certificate of correction reflecting the amount of PTA days determined by the recalculation.

Prior to the issuance of the certificate of correction, the USPTO will afford patentee an opportunity to be heard and request reconsideration. Accordingly, patentee has **one month or thirty (30) days**, whichever is longer, to file a request for reconsideration of this patent term adjustment calculation. See 35 U.S.C. 154(b)(3)(B)(ii) and 37 CFR 1.322(a)(4). No extensions of time will be granted under 37 CFR 1.136.

Patentee should use document code PET.OP if electronically filing a request for reconsideration of this patent term adjustment calculation. The patentee must also include the information required by 37 CFR 1.705(b)(2) and the fee required by 37 CFR 1.18(e). If patentee does not file a timely request for reconsideration of this patent term adjustment calculation including the information required by 37 CFR 1.705(b)(2) and the fee required by 37 CFR 1.18(e), the USPTO will issue a certificate of correction reflecting the PTA determination noted above.

Patentee should be aware that in order to preserve the right to review in the United States District Court for the District of Columbia of the USPTO patent term adjustment determination, patentee must ensure that he or she also take the steps required under 35 U.S.C. 154(b)(4)(A) in a timely manner. Nothing in the request for recalculation should be construed as providing an alternative time frame for commencing a civil action under 35 U.S.C. 154(b)(4)(A).

Any questions concerning this decision should be directed to the Office of Patent Legal Administration at 571-272-7702.

UNITED STATES PATENT AND TRADEMARK OFFICE

UNITED STATES DEPARTMENT OF COMMERCE
United States Patent and Trademark Office
Address: COMMISSIONER FOR PATENTS
P.O. Box 1450
Alexandria, Virginia 22313-1450
www.uspto.gov

THE FARRELL LAW FIRM, LLP
290 Broadhollow Road
Suite 210E
Melville, NY 11747

Mail Date: 04/21/2010

Applicant	: Kyung-Chul Kim	: DECISION ON REQUEST FOR
Patent Number	: 7665913	: RECALCULATION of PATENT
Issue Date	: 02/23/2010	: TERM ADJUSTMENT IN VIEW
Appliction No	: 11/487,198	: OF WYETH AND NOTICE OF INTENT TO
Filed	: 07/14/2006	: ISSUE CERTIFICATE OF CORRECTION
		:

The Request for Recalculation is **GRANTED** to the extent indicated.

The patent term adjustment has been determined to be **811** days. The USPTO will *sua sponte* issue a certificate of correction reflecting the amount of PTA days determined by the recalculation.

Prior to the issuance of the certificate of correction, the USPTO will afford patentee an opportunity to be heard and request reconsideration. Accordingly, patentee has **one month or thirty (30) days**, whichever is longer, to file a request for reconsideration of this patent term adjustment calculation. See 35 U.S.C. 154(b)(3)(B)(ii) and 37 CFR 1.322(a)(4). No extensions of time will be granted under 37 CFR 1.136.

Patentee should use document code PET.OP if electronically filing a request for reconsideration of this patent term adjustment calculation. The patentee must also include the information required by 37 CFR 1.705(b)(2) and the fee required by 37 CFR 1.18(e). If patentee does not file a timely request for reconsideration of this patent term adjustment calculation including the information required by 37 CFR 1.705(b)(2) and the fee required by 37 CFR 1.18(e), the USPTO will issue a certificate of correction reflecting the PTA determination noted above.

Patentee should be aware that in order to preserve the right to review in the United States District Court for the District of Columbia of the USPTO patent term adjustment determination, patentee must ensure that he or she also take the steps required under 35 U.S.C. 154(b)(4)(A) in a timely manner. Nothing in the request for recalculation should be construed as providing an alternative time frame for commencing a civil action under 35 U.S.C. 154(b)(4)(A).

Any questions concerning this decision should be directed to the Office of Patent Legal Administration at 571-272-7702.

UNITED STATES PATENT AND TRADEMARK OFFICE

UNITED STATES DEPARTMENT OF COMMERCE
United States Patent and Trademark Office
Address: COMMISSIONER FOR PATENTS
P.O. Box 1450
Alexandria, Virginia 22313-1450
www.uspto.gov

THE FARRELL LAW FIRM, LLP
290 Broadhollow Road
Suite 210E
Melville, NY 11747

Mail Date: 04/21/2010

Applicant	: Song-Nam Hong	: DECISION ON REQUEST FOR
Patent Number	: 7584401	: RECALCULATION of PATENT
Issue Date	: 09/01/2009	: TERM ADJUSTMENT IN VIEW
Appliction No	: 11/487,201	: OF WYETH AND NOTICE OF INTENT TO
Filed	: 07/14/2006	: ISSUE CERTIFICATE OF CORRECTION
		:

The Request for Recalculation is **GRANTED** to the extent indicated.

The patent term adjustment has been determined to be **336** days. The USPTO will *sua sponte* issue a certificate of correction reflecting the amount of PTA days determined by the recalculation.

Prior to the issuance of the certificate of correction, the USPTO will afford patentee an opportunity to be heard and request reconsideration. Accordingly, patentee has **one month or thirty (30) days**, whichever is longer, to file a request for reconsideration of this patent term adjustment calculation. See 35 U.S.C. 154(b)(3)(B)(ii) and 37 CFR 1.322(a)(4). No extensions of time will be granted under 37 CFR 1.136.

Patentee should use document code PET.OP if electronically filing a request for reconsideration of this patent term adjustment calculation. The patentee must also include the information required by 37 CFR 1.705(b)(2) and the fee required by 37 CFR 1.18(e). If patentee does not file a timely request for reconsideration of this patent term adjustment calculation including the information required by 37 CFR 1.705(b)(2) and the fee required by 37 CFR 1.18(e), the USPTO will issue a certificate of correction reflecting the PTA determination noted above.

Patentee should be aware that in order to preserve the right to review in the United States District Court for the District of Columbia of the USPTO patent term adjustment determination, patentee must ensure that he or she also take the steps required under 35 U.S.C. 154(b)(4)(A) in a timely manner. Nothing in the request for recalculation should be construed as providing an alternative time frame for commencing a civil action under 35 U.S.C. 154(b)(4)(A).

Any questions concerning this decision should be directed to the Office of Patent Legal Administration at 571-272-7702.

UNITED STATES PATENT AND TRADEMARK OFFICE

COMMISSIONER FOR PATENTS
UNITED STATES PATENT AND TRADEMARK OFFICE
P.O. BOX 1450
ALEXANDRIA, VA 22313-1450
www.uspto.gov

COPY MAILED

AUG 22 2006

OFFICE OF PETITIONS

HESLIN ROTHENBERG FARLEY & MESITI PC
5 COLUMBIA CIRCLE
ALBANY NY 12203

In re Application of :
Zhang et al. :
Application No. 11/487,204 : DECISION ON PETITION
Filed: July 14, 2006 : TO MAKE SPECIAL
Attorney Docket No. 2778.001 : 37 CFR 1.102
:

This is a decision on the petition under 37 CFR 1.102, filed July 14, 2006, to make the above-identified application special.

The petition requests that the above-identified application be made special under the accelerated examination procedure set forth in M.P.E.P. § 708.02, Section IX, relating to superconductive materials.

The petition is **GRANTED**.

In accordance with the President's mandate directing the U.S. Patent and Trademark Office to accelerate the processing of patent applications and adjudication of disputes involving superconductivity technologies when requested by the applicant to do so, the U.S. Patent and Trademark Office will, on request, accord "special" status to all patent applications for inventions involving superconductivity materials. A grantable petition to make an application special MPEP § 708.02, Section IX, must be accompanied by a statement under 37 CFR 1.102 that the invention involves superconductive materials. No fee is required. The instant petition contains the required statement. Accordingly, the above-identified application has been accorded "special" status.

Telephone inquires concerning this decision should be directed to the undersigned at (571) 272-3217. All other inquires concerning either the examination or status of the application should be directed to the Technology Center.

The application is being referred to Technology Center Art Unit 1725 for expedited prosecution.

Brian Hearn
Petitions Examiner
Office of Petitions

UNITED STATES PATENT AND TRADEMARK OFFICE

COMMISSIONER FOR PATENTS
UNITED STATES PATENT AND TRADEMARK OFFICE
P.O. BOX 1450
ALEXANDRIA, VA 22313-1450
www.uspto.gov

UNITED STATES SURGICAL,
A DIVISION OF TYCO HEALTHCARE GROUP LP
195 MCDERMOTT ROAD
NORTH HAVEN, CT 06473

COPY MAILED

JAN 0 5 2007

OFFICE OF PETITIONS

In re Application of	:	
Podhasky	:	
Filed: July 14, 2006	:	ON PETITION
Application No. 11/487,223	:	
Dkt. No.: H-US-00438CIP (203-4883CI	:	

This is a decision on the petition under 37 CFR 1.53 filed September 1, 2006 to accord the above-identified application a filing date of July 14, 2006.

The petition under 37 CFR 1.53 is **DISMISSED**.

The application was submitted July 14, 2006 without drawings. The Notice of Incomplete Nonprovisional Application was mailed August 8, 2006. The Notice indicated the application had not been accorded a filing date because the application appeared to have been submitted without drawings as required per 35 USC 113.

Applicants herein argue that the drawings are not necessary for an understanding of the invention.

As stated in MPEP 601.01(f), it is the practice of the PTO to treat a non-provisional application that contains at least some disclosure of a process or method as an application for which a drawing is not necessary for an understanding of the invention under 35 USC 113 (first sentence).

Moreover, MPEP 601.01(f) states that a nonprovisional application having at least one claim, or a provisional application having at least some disclosure, directed to the subject matter discussed above for which a drawing is usually not considered essential for a filing date, describing drawing figure(s) in the specification, but filed without drawings will be treated as an application filed without all of the drawing figures referred to in the specification as discussed in MPEP 601.01(g), so long as the application contains something that can be construed as a written description and the names of all the inventors. Should the Technology Center determine that

drawings are necessary under 35 U.S.C. 113 (first sentence) the filing date issue will be reconsidered by the USPTO.

A review of the official file reveals that the instant application includes at least one method claim. As it is USPTO practice to treat a non-provisional application that contains at least some disclosure of a process or method as an application for which a drawing is not necessary, the application, as submitted, is entitled to a filing date of July 14, 2006. Thus, the instant petition is unnecessary as the instant application is otherwise entitled to a filing date under 37 CFR 1.53(b). Accordingly, the Notice as it relates to the 35 USC 113 requirement is withdrawn.

The application will be processed with only the papers present on July 14, 2006, without drawings as part of the original disclosure.

To avoid delay in processing, if petitioners desire to have drawings considering during the course of examination and made part of this application, petitioners should consider submitting a second preliminary amendment to this effect prior to issuance of the first Office action on the merits.

No fee is due in connection with this matter. Petitioner is entitled to a refund of the previously submitted petition fee of $400.00. A refund may be requested by writing to the Finance Office, Refund Section. A copy of this decision should accompany any request for refund.

The application is being returned to the Office of Initial Patent Examination for further processing with a filing date of July 14, 2006 using only the papers present on that day and without entry of any drawings into the record.

Telephone inquiries related to this decision may be directed to the undersigned at (571) 272-3205.

Alesia M. Brown
Petitions Attorney
Office of Petitions

UNITED STATES PATENT AND TRADEMARK OFFICE

COMMISSIONER FOR PATENTS
UNITED STATES PATENT AND TRADEMARK OFFICE
P.O. BOX 1450
ALEXANDRIA, VA 22313-1450
www.uspto.gov

UNITED STATES SURGICAL,
A DIVISION OF TYCO HEALTHCARE GROUP LP
195 MCDERMOTT ROAD
NORTH HAVEN, CT 06473

COPY MAILED

JAN 05 2007

OFFICE OF PETITIONS

In re Application of :
Podhajsky :
Filed: July 14, 2006 : ON PETITION
Application No. 11/487,223 :
Dkt. No.: H-US-00438CIP (203-4883CI :

This is a decision on the petition under 37 CFR 1.53 filed September 1, 2006 to accord the above-identified application a filing date of July 14, 2006.

The petition under 37 CFR 1.53 is **DISMISSED**.

The application was submitted July 14, 2006 without drawings. The Notice of Incomplete Nonprovisional Application was mailed August 8, 2006. The Notice indicated the application had not been accorded a filing date because the application appeared to have been submitted without drawings as required per 35 USC 113.

Applicant argues that drawings are not necessary for an understanding of the invention.

As stated in MPEP 601.01(f), it is the practice of the PTO to treat a non-provisional application that contains at least some disclosure of a process or method as an application for which a drawing is not necessary for an understanding of the invention under 35 USC 113 (first sentence).

Moreover, MPEP 601.01(f) states that a nonprovisional application having at least one claim, or a provisional application having at least some disclosure, directed to the subject matter discussed above for which a drawing is usually not considered essential for a filing date, describing drawing figure(s) in the specification, but filed without drawings will be treated as an application filed without all of the drawing figures referred to in the specification as discussed in MPEP 601.01(g), so long as the application contains something that can be construed as a written description and the names of all the inventors. Should the Technology Center determine that

drawings are necessary under 35 U.S.C. 113 (first sentence) the filing date issue will be reconsidered by the USPTO.

A review of the official file reveals that the instant application includes at least one method claim. As it is USPTO practice to treat a non-provisional application that contains at least some disclosure of a process or method as an application for which a drawing is not necessary, the application, as submitted, is entitled to a filing date of July 14, 2006. Thus, the instant petition is unnecessary as the instant application is otherwise entitled to a filing date under 37 CFR 1.53(b). Accordingly, the Notice as it relates to the 35 USC 113 requirement is withdrawn.

The application will be processed with only the papers present on July 14, 2006, without drawings as part of the original disclosure.

To avoid delay in processing, if petitioner desires to have drawings considering during the course of examination and made part of this application, petitioner should consider submitting a second preliminary amendment to this effect prior to issuance of the first Office action on the merits.

No fee is due in connection with this matter. Petitioner is entitled to a refund of the previously submitted petition fee of $400.00. A refund may be requested by writing to the Finance Office, Refund Section. A copy of this decision should accompany any request for refund.

The application is being returned to the Office of Initial Patent Examination for further processing with a filing date of July 14, 2006 using only the papers present on that day and without entry of any drawings into the record.

Telephone inquiries related to this decision may be directed to the undersigned at (571) 272-3205.

Alesia M. Brown
Petitions Attorney
Office of Petitions

UNITED STATES PATENT AND TRADEMARK OFFICE

UNITED STATES DEPARTMENT OF COMMERCE
United States Patent and Trademark Office
Address: COMMISSIONER FOR PATENTS
P.O. Box 1450
Alexandria, Virginia 22313-1450
www.uspto.gov

TOWNSEND AND TOWNSEND AND CREW, LLP
TWO EMBARCADERO CENTER
EIGHTH FLOOR
SAN FRANCISCO, CA 94111-3834

Mail Date: 04/30/2010

Applicant	: Jerry Yang	: DECISION ON REQUEST FOR
Patent Number	: 7666886	: RECALCULATION of PATENT
Issue Date	: 02/23/2010	: TERM ADJUSTMENT IN VIEW
Application No	: 11/487,224	: OF WYETH AND NOTICE OF INTENT TO
Filed	: 07/14/2006	: ISSUE CERTIFICATE OF CORRECTION
		:

The Request for Recalculation is **GRANTED** to the extent indicated.

The patent term adjustment has been determined to be **97** days. The USPTO will *sua sponte* issue a certificate of correction reflecting the amount of PTA days determined by the recalculation.

Prior to the issuance of the certificate of correction, the USPTO will afford patentee an opportunity to be heard and request reconsideration. Accordingly, patentee has **one month or thirty (30) days**, whichever is longer, to file a request for reconsideration of this patent term adjustment calculation. See 35 U.S.C. 154(b)(3)(B)(ii) and 37 CFR 1.322(a)(4). No extensions of time will be granted under 37 CFR 1.136.

Patentee should use document code PET.OP if electronically filing a request for reconsideration of this patent term adjustment calculation. The patentee must also include the information required by 37 CFR 1.705(b)(2) and the fee required by 37 CFR 1.18(e). If patentee does not file a timely request for reconsideration of this patent term adjustment calculation including the information required by 37 CFR 1.705(b)(2) and the fee required by 37 CFR 1.18(e), the USPTO will issue a certificate of correction reflecting the PTA determination noted above.

Patentee should be aware that in order to preserve the right to review in the United States District Court for the District of Columbia of the USPTO patent term adjustment determination, patentee must ensure that he or she also take the steps required under 35 U.S.C. 154(b)(4)(A) in a timely manner. Nothing in the request for recalculation should be construed as providing an alternative time frame for commencing a civil action under 35 U.S.C. 154(b)(4)(A).

Any questions concerning this decision should be directed to the Office of Patent Legal Administration at 571-272-7702.

UNITED STATES PATENT AND TRADEMARK OFFICE

Commissioner for Patents
United States Patent and Trademark Office
P.O. Box 1450
Alexandria, VA 22313-1450
www.uspto.gov

QUALCOMM INCORPORATED
5775 MOREHOUSE DR.
SAN DIEGO CA 92121

MAILED

FEB 0 3 2010

OFFICE OF PETITIONS

In re Application of
Anigstein et al.
Application No. 11/487,225
Filed: July 14, 2006
Attorney Docket No. 061091

: DECISION GRANTING PETITION
: UNDER 37 CFR 1.78(a)(3)

This is a decision on the petition under 37 CFR 1.78(a)(3), filed November 30, 2009, to accept an unintentionally delayed claim under 35 U.S.C. § 120 for the benefit of priority to the prior-filed nonprovisional application set forth in the amendment filed concurrently with the instant petition.

The petition is **GRANTED**.

A petition for acceptance of a claim for late priority under 37 CFR 1.78(a)(3) is only applicable to those applications filed on or after November 29, 2000. Further, the petition is appropriate only after the expiration of the period specified in 37 CFR 1.78(a)(2)(ii). In addition, the petition under 37 CFR 1.78(a)(3) must be accompanied by:

(1) the reference required by 35 U.S.C. § 120 and 37 CFR 1.78(a)(2)(i) of the prior-filed application, unless previously submitted;
(2) the surcharge set forth in § 1.17(t); and
(3) a statement that the entire delay between the date the claim was due under 37 CFR 1.78(a)(2)(ii) and the date the claim was filed was unintentional. The Commissioner may require additional information where there is a question whether the delay was unintentional.

The instant nonprovisional application was filed after November 29, 2000, and the claim herein for the benefit of priority to the prior-filed nonprovisional application is submitted after expiration of the period specified by 37 CFR 1.78(a)(2)(ii). Therefore, this is a proper petition under 37 CFR 1.78(a)(3).

The petition complies with the requirements for a grantable petition under 37 CFR 1.78(a)(3) in that (1) a reference to the prior-filed nonprovisional application has been included in an amendment to the first sentence of the specification following the title, as provided by 37 CFR 1.78(a)(2)(iii); (2) the surcharge fee required by 37 CFR 1.17(t) has been submitted; and (3) the petition contains a proper statement of unintentional delay. Accordingly, having found that the instant petition for acceptance of an unintentionally delayed claim for the benefit of priority under 35 U.S.C. § 120 to the prior-filed nonprovisional application satisfies the conditions of 37 CFR 1.78(a)(3), the petition is granted.

The granting of the petition to accept the delayed benefit claim to the prior-filed application under 37 CFR 1.78(a)(3) should not be construed as meaning that the instant application is entitled to the benefit of the prior-filed application. In order for the instant application to be entitled to the benefit of the prior-filed application, all other requirements under 35 U.S.C. § 120 and 37 CFR 1.78(a)(1) and (a)(2) must be met. Similarly, the fact that the corrected Filing Receipt accompanying this decision on petition includes the prior-filed application should not be construed as meaning that applicant is entitled to the claim for benefit of priority to the prior-filed application noted thereon. Accordingly, the examiner will, in due course, consider this benefit claim and determine whether the instant application is entitled to the benefit of the earlier filing date.

A corrected Filing Receipt, which includes the priority claim to the prior-filed nonprovisional application, accompanies this decision on petition.

Any inquiries concerning this decision may be directed to Joan Olszewski at (571) 272-7751.

This matter is being referred to Technology Center Art Unit 2618 for appropriate action on the amendment filed November 30, 2009, including consideration by the examiner of applicant's entitlement to claim benefit of priority under 35 U.S.C. § 120 to the prior-filed nonprovisional application.

/Liana Walsh/
Liana Walsh
Petitions Examiner
Office of Petitions

ATTACHMENT: Corrected Filing Receipt

UNITED STATES PATENT AND TRADEMARK OFFICE

UNITED STATES DEPARTMENT OF COMMERCE
United States Patent and Trademark Office
Address: COMMISSIONER FOR PATENTS
P.O. Box 1450
Alexandria, Virginia 22313-1450
www.uspto.gov

APPLICATION NUMBER	FILING or 371(c) DATE	GRP ART UNIT	FIL FEE REC'D	ATTY.DOCKET.NO	TOT CLAIMS	IND CLAIMS
11/487,225	07/14/2006	2618	4780	061091	60	10

CONFIRMATION NO. 5201

CORRECTED FILING RECEIPT

23696
QUALCOMM INCORPORATED
5775 MOREHOUSE DR.
SAN DIEGO, CA 92121

Date Mailed: 02/02/2010

Receipt is acknowledged of this non-provisional patent application. The application will be taken up for examination in due course. Applicant will be notified as to the results of the examination. Any correspondence concerning the application must include the following identification information: the U.S. APPLICATION NUMBER, FILING DATE, NAME OF APPLICANT, and TITLE OF INVENTION. Fees transmitted by check or draft are subject to collection. Please verify the accuracy of the data presented on this receipt. **If an error is noted on this Filing Receipt, please submit a written request for a Filing Receipt Correction. Please provide a copy of this Filing Receipt with the changes noted thereon. If you received a "Notice to File Missing Parts" for this application, please submit any corrections to this Filing Receipt with your reply to the Notice. When the USPTO processes the reply to the Notice, the USPTO will generate another Filing Receipt incorporating the requested corrections**

Applicant(s)

Pablo Anigstein, Gillette, NJ;
Prashanth Hande, Jersey City, NJ;
Junyi Li, Bedminster, NJ;

Power of Attorney: The patent practitioners associated with Customer Number 23696

Domestic Priority data as claimed by applicant

This application is a CIP of 10/641,308 08/13/2003 PAT 7,420,939

Foreign Applications

If Required, Foreign Filing License Granted: 08/11/2006

The country code and number of your priority application, to be used for filing abroad under the Paris Convention, is **US 11/487,225**

Projected Publication Date: Not Applicable

Non-Publication Request: No

Early Publication Request: No

Title

User specific downlink power control channel Q-bit

Preliminary Class

455

PROTECTING YOUR INVENTION OUTSIDE THE UNITED STATES

Since the rights granted by a U.S. patent extend only throughout the territory of the United States and have no effect in a foreign country, an inventor who wishes patent protection in another country must apply for a patent in a specific country or in regional patent offices. Applicants may wish to consider the filing of an international application under the Patent Cooperation Treaty (PCT). An international (PCT) application generally has the same effect as a regular national patent application in each PCT-member country. The PCT process **simplifies** the filing of patent applications on the same invention in member countries, but **does not result** in a grant of "an international patent" and does not eliminate the need of applicants to file additional documents and fees in countries where patent protection is desired.

Almost every country has its own patent law, and a person desiring a patent in a particular country must make an application for patent in that country in accordance with its particular laws. Since the laws of many countries differ in various respects from the patent law of the United States, applicants are advised to seek guidance from specific foreign countries to ensure that patent rights are not lost prematurely.

Applicants also are advised that in the case of inventions made in the United States, the Director of the USPTO must issue a license before applicants can apply for a patent in a foreign country. The filing of a U.S. patent application serves as a request for a foreign filing license. The application's filing receipt contains further information and guidance as to the status of applicant's license for foreign filing.

Applicants may wish to consult the USPTO booklet, "General Information Concerning Patents" (specifically, the section entitled "Treaties and Foreign Patents") for more information on timeframes and deadlines for filing foreign patent applications. The guide is available either by contacting the USPTO Contact Center at 800-786-9199, or it can be viewed on the USPTO website at http://www.uspto.gov/web/offices/pac/doc/general/index.html.

For information on preventing theft of your intellectual property (patents, trademarks and copyrights), you may wish to consult the U.S. Government website, http://www.stopfakes.gov. Part of a Department of Commerce initiative, this website includes self-help "toolkits" giving innovators guidance on how to protect intellectual property in specific countries such as China, Korea and Mexico. For questions regarding patent enforcement issues, applicants may call the U.S. Government hotline at 1-866-999-HALT (1-866-999-4158).

LICENSE FOR FOREIGN FILING UNDER

Title 35, United States Code, Section 184

Title 37, Code of Federal Regulations, 5.11 & 5.15

GRANTED

The applicant has been granted a license under 35 U.S.C. 184, if the phrase "IF REQUIRED, FOREIGN FILING LICENSE GRANTED" followed by a date appears on this form. Such licenses are issued in all applications where the conditions for issuance of a license have been met, regardless of whether or not a license may be required as

set forth in 37 CFR 5.15. The scope and limitations of this license are set forth in 37 CFR 5.15(a) unless an earlier license has been issued under 37 CFR 5.15(b). The license is subject to revocation upon written notification. The date indicated is the effective date of the license, unless an earlier license of similar scope has been granted under 37 CFR 5.13 or 5.14.

This license is to be retained by the licensee and may be used at any time on or after the effective date thereof unless it is revoked. This license is automatically transferred to any related applications(s) filed under 37 CFR 1.53(d). This license is not retroactive.

The grant of a license does not in any way lessen the responsibility of a licensee for the security of the subject matter as imposed by any Government contract or the provisions of existing laws relating to espionage and the national security or the export of technical data. Licensees should apprise themselves of current regulations especially with respect to certain countries, of other agencies, particularly the Office of Defense Trade Controls, Department of State (with respect to Arms, Munitions and Implements of War (22 CFR 121-128)); the Bureau of Industry and Security, Department of Commerce (15 CFR parts 730-774); the Office of Foreign AssetsControl, Department of Treasury (31 CFR Parts 500+) and the Department of Energy.

NOT GRANTED

No license under 35 U.S.C. 184 has been granted at this time, if the phrase "IF REQUIRED, FOREIGN FILING LICENSE GRANTED" DOES NOT appear on this form. Applicant may still petition for a license under 37 CFR 5.12, if a license is desired before the expiration of 6 months from the filing date of the application. If 6 months has lapsed from the filing date of this application and the licensee has not received any indication of a secrecy order under 35 U.S.C. 181, the licensee may foreign file the application pursuant to 37 CFR 5.15(b).

UNITED STATES PATENT AND TRADEMARK OFFICE

Commissioner for Patents
United States Patent and Trademark Office
P.O. Box 1450
Alexandria, VA 22313-1450
www.uspto.gov

BARRY DOVE PATENT SERVICES, INC.
324 RAINTREE DRIVE
COPPELL TX 75019

COPY MAILED

SEP 12 2007

OFFICE OF PETITIONS

In re Application of :
WOODRUFF, et al. :
Application No. 11/487,245 : DECISION ON PETITION
Filed: July 14, 2006 : TO WITHDRAW
Attorney Docket No. **AFW-001** : FROM RECORD
:

This is a decision on the Request to Withdraw as attorney or agent of record under 37 C.F.R. § 1.36(b), filed April 13, 2007.

The request is **NOT APPROVED.**

A grantable request to withdraw as attorney/agent of record must be signed by every attorney/agent seeking to withdraw or contain a clear indication that one attorney is signing on behalf of another/others. A request to withdraw will not be approved unless at least 30 (thirty) days would remain between the date of approval and the later of the expiration date of a time to file a response or the expiration date of the maximum time period which can be extended under 37 C.F.R. § 1.136(a).

The Office cannot approve the request at this time since the reasons provided do not meet any of the conditions under the mandatory or permissive categories enumerated in 37 CFR 10.40. Section 10.40 of Title 37 of the Code of Federal Regulation states, "[a] practitioner shall not withdraw from employment in a proceeding before the Office without permission from the Office[.]" More specifically, 37 CFR 10.40 states, "[i]f paragraph (b) of this section is not applicable, a practitioner may not request permission to withdraw in matter pending before the Office unless such request or such withdrawal is" for one the permissive reasons listed in 37 CFR 10.40(c). The reasons set forth in the request do not meet any of the conditions set forth in 37 CFR 10.40.

All future communications from the Office will continue to be directed to the above-listed address until otherwise notified by applicant.

Telephone inquiries concerning this decision should be directed to the undersigned at 571-272-7253.

Monica A. Graves
Petitions Examiner
Office of Petitions

cc: **ALLEN AND HAN WOODRUFF**
3385 LAKEVIEW OAK DRIVE
LONGWOOD, FL 32779

UNITED STATES PATENT AND TRADEMARK OFFICE

Commissioner for Patents
United States Patent and Trademark Office
P.O. Box 1450
Alexandria, VA 22313-1450
www.uspto.gov

JJGJR.: 04-07

Paper No: __

COPY MAILED

APR 23 2007

OFFICE OF PETITIONS

HEWLETT PACKARD COMPANY
P O BOX 272400, 3404 E. HARMONY ROAD
INTELLECTUAL PROPERTY ADMINISTRATION
FORT COLLINS CO 80527-2400

In re Application of :
Gupta :
Application No. 11/487,248 : ON PETITION
Filed: 14 July, 2006 :
Attorney Docket No. 200404791-2 :

This is a decision on the papers considered as a petition filed on 4 December, 2006, under 37 C.F.R. §1.47.

For the reasons set forth below, the petition under 37 C.F.R. §1.47 is **DISMISSED**.

NOTES:

(1) Any reply must include a renewed petition (and fee) must include a petition under 37 C.F.R. §1.47 and must be submitted within two (2) months from the mail date of this decision. Extensions of time under 37 C.F.R. §1.136(a) are permitted. The reconsideration request should include a cover letter entitled "Petition under 37 C.F.R. §1.47";

(2) Thereafter, there will be no further reconsideration of this matter.

BACKGROUND

The record indicates:

- the instant application was filed on 14 July, 2006, without, *inter alia*, a fully executed oath/declaration;

- on 7 August, 2006, the Office mailed a Notice of Missing Parts indicating, *inter alia*, that a fully executed oath/declaration was required within two months;

- on 4 December, 2006, Petitioner Charles Griggers (Reg. No. 47,283) filed, *inter alia*, the original petition, and, *inter alia*, an un-executed oath/declaration executed by him and no the statement of the assignee as to who was authorized to sign, and irreparable harm, and no evidence of diligence in determining the current/reasonably believed last known residential address of the non-signing inventor, as such requirements are set forth at 37 C.F.R. §1.47 and discussed at length at MPEP §409.03(b).

Petitioner is requested to move stepwise through the regulatory requirements, addressing each element in turn, and providing documentary evidence in support of averments.

Out of an abundance of caution, Petitioners always are reminded that those registered to practice *and* all others who make representations before the Office are reminded to inquire into the underlying facts of representations made to the Office and support averments with the appropriate documentation–since all owe to the Office the continuing duty to disclose.[1]

---

[1] See supplement of 17 June, 1999. The Patent and Trademark Office is relying on petitioner's duty of candor and good faith and accepting a statement made by Petitioner. See Changes to Patent Practice and Procedure, 62 Fed. Reg. at 53160 and 53178, 1203 Off. Gaz. Pat. Office at 88 and 103 (responses to comments 64 and 109)(applicant obligated under 37 C.F.R. §10.18 to inquire into the underlying facts and circumstances when providing statements to the Patent and Trademark Office).

Specifically, the regulations at 37 C.F.R. §10.18 provide:

§ 10.18 Signature and certificate for correspondence filed in the Patent and Trademark Office.
(a) For all documents filed in the Office in patent, trademark, and other non-patent matters, except for correspondence that is required to be signed by the applicant or party, each piece of correspondence filed by a practitioner in the Patent and Trademark Office must bear a signature by such practitioner complying with the provisions of §1.4(d), §1.4(e), or § 2.193(c)(1) of this chapter.
(b) By presenting to the Office (whether by signing, filing, submitting, or later advocating) any paper, the party presenting such paper, whether a practitioner or non-practitioner, is certifying that—

(1) All statements made therein of the party's own knowledge are true, all statements made therein on information and belief are believed to be true, and all statements made therein are made with the knowledge that whoever, in any matter within the jurisdiction of the Patent and Trademark Office, knowingly and willfully falsifies, conceals, or covers up by any trick, scheme, or device a material fact, or makes any false, fictitious or fraudulent statements or representations, or makes or uses any false writing or document knowing the same to contain any false, fictitious or fraudulent statement or entry, shall be subject to the penalties set forth under 18 U.S.C. 1001, and that violations of this paragraph may jeopardize the validity of the application or document, or the validity or enforceability of any patent, trademark registration, or certificate resulting therefrom; and

(2) To the best of the party's knowledge, information and belief, formed after an inquiry reasonable under the circumstances, that —

(i) The paper is not being presented for any improper purpose, such as to harass someone or to cause unnecessary delay or needless increase in the cost of prosecution before the Office;

(ii) The claims and other legal contentions therein are warranted by existing law or by a nonfrivolous argument for the extension, modification, or reversal of existing law or the establishment of new law;

(iii) The allegations and other factual contentions have evidentiary support or, if specifically so identified, are likely to have evidentiary support after a reasonable opportunity for further investigation or discovery; and

(iv) The denials of factual contentions are warranted on the evidence, or if specifically so identified, are reasonably based on a lack of information or belief.

ANALYSIS

The regulations at 37 C.F.R. §1.47 provide in pertinent part:

> **§ 1.47 Filing when an inventor refuses to sign or cannot be reached.**
> (a) If a joint inventor refuses to join in an application for patent or cannot be found or reached after diligent effort, the application may be made by the other inventor on behalf of himself or herself and the nonsigning inventor. The oath or declaration in such an application must be accompanied by a petition including proof of the pertinent facts, the fee set forth in § 1.17(h), and the last known address of the nonsigning inventor. The nonsigning inventor may subsequently join in the application by filing an oath or declaration complying with §1.63.
> * * *

The regulations at 37 C.F.R. §1.63 provide in pertinent part:

> **§1.63 Oath or declaration.**
>
> (b) In addition to meeting the requirements of paragraph (a)of this section, the oath or declaration must also:
>
> (1)Identify the application to which it is directed;
>
> (2) State that the person making the oath or declaration has reviewed and understands the contents of the application, Including the claims, as amended by any amendment specifically referred to in the oath or declaration; and
>
> (3) State that the person making the oath or declaration acknowledges the duty to disclose to the Office all information known to the person to be material to patentability as defined in

---

(c) Violations of paragraph (b)(1) of this section by a practitioner or non-practitioner may jeopardize the validity of the application or document, or the validity or enforceability of any patent, trademark registration, or certificate resulting therefrom. Violations of any of paragraphs (b)(2)(i) through (iv) of this section are, after notice and reasonable opportunity to respond, subject to such sanctions as deemed appropriate by the Commissioner, or the Commissioner's designee, which may include, but are not limited to, any combination of —

(1) Holding certain facts to have been established;
(2) Returning papers;
(3) Precluding a party from filing a paper, or presenting or contesting an issue;
(4) Imposing a monetary sanction;
(5) Requiring a terminal disclaimer for the period of the delay; or
(6) Terminating the proceedings in the Patent and Trademark Office.

(d) Any practitioner violating the provisions of this section may also be subject to disciplinary action. See § 10.23(c)(15).

[Added 50 FR 5175, Feb. 6, 1985, effective Mar. 8, 1985; para. (a) revised, 58 FR 54494, Oct. 22, 1993, effective Nov. 22, 1993; paras. (a) & (b) revised, paras. (c) & (d) added, 62 FR 53131, Oct. 10, 1997, effective Dec. 1, 1997; para. (a) revised, 69 FR 56481, Sept. 21, 2004, effective Oct. 21, 2004]

§1.56.

Alternatives

When it is a matter that Petitioner submits a wholly unsigned oath/declaration, the commentary at MPEP §409.03(b) provides that, where no inventors are available to sign:

> **409.03(b) No Inventor Available**
>
> Filing under 37 C.F.R. 1.47(b) and 35 U.S.C. 118 is permitted only when no inventor is available to make application. These provisions allow a "person" with a demonstrated proprietary interest to make application "on behalf of and as agent for" an inventor who "can-not be found or reached after diligent effort" or who refuses to sign the application oath or declaration. The word "person" has been construed by the U.S. Patent and Trademark Office to include juristic entities, such as a corporation. Where 37 C.F.R. 1.47(a) is available, application cannot be made under 37 C.F.R. 1.47(b).
>
> In addition to other requirements of law (35 U.S.C. 111(a) and 115), an application deposited pursuant to 37 C.F.R. 1.47(b) must meet the following requirements:
>
> (A) The 37 C.F.R. 1.47(b) applicant must make the oath required by 37 C.F.R. 1.63 and 1.64 or 1.175. Where a corporation is the 37 C.F.R. 1.47(b) applicant, an officer (President, Vice-President, Secretary, Treasurer, or Chief Executive Officer) thereof should normally sign the necessary oath or declaration. A corporation may authorize any person, including an attorney or agent registered to practice before the U.S. Patent and Trademark Office, to sign the application oath or declaration on its behalf. Where an oath or declaration is signed by a registered attorney or agent on behalf of a corporation, either proof of the attorney's or agent's authority in the form of a statement signed by an appropriate corporate officer must be submitted, or the attorney or agent may simply state that he or she is authorized to sign on behalf of the corporation. Where the oath or declaration is being signed on behalf of an assignee, see MPEP § 324. An inventor may not authorize another individual to act as his or her agent to sign the application oath or declaration on his or her behalf. *Staeger v. Commissioner*, 189 USPQ 272 (D.D.C. 1976), *In re Striker*, 182 USPQ 507 (Comm'r Pat. 1973). Where an application is executed by one other than the inventor, the declaration required by 37 C.F.R. 1.63 must state the full name, residence, post office address, and citizenship of the nonsigning inventor. Also, the title or position of the person signing must be stated if signing on behalf of a corporation under 37 C.F.R.

1.47(b).

(B) The 37 C.F.R. 1.47(b) applicant must state his or her relationship to the inventor as required by 37 C.F.R. 1.64.

(C) The application must be accompanied by proof that the inventor (1) cannot be found or reached after a diligent effort or (2) refuses to execute the application papers. See MPEP §409.03(d).

(D) The last known address of the inventor must be stated. See MPEP §409.03(e).

(E) The 37 C.F.R. 1.47(b) applicant must make out a *prima facie* case (1) that the invention has been assigned to him or her or (2) that the inventor has agreed in writing to assign the invention to him or her or (3) otherwise demonstrate a proprietary interest in the subject matter of the application. See MPEP §409.03(f).

(F) The 37 C.F.R. 1.47(b) applicant must prove that the filing of the application is necessary (1) to pre-serve the rights of the parties or (2) to prevent irreparable damage. See MPEP §409.03(g).

Thus, a registered practitioner signing on behalf of the assignee, must state affirmatively that the practitioner is authorized to so sign. (MPEP §409.03(b)).

When one alleges a refusal of the inventor(s) or unavailability of the inventor(s) to sign the application papers, the circumstances of the presentation of the application papers and of the refusal must be specified in a statement of facts by the person who, *inter alia*, presented the inventor with the application papers and/or to whom the refusal was made.

The commentary at MPEP §409.03(d) provides:

409.03(d) Proof of Unavailability or Refusal

INVENTOR CANNOT BE REACHED

Where inability to find or reach a nonsigning inventor "after diligent effort" is the reason for filing under 37 C.F.R. §1.47, a statement of facts should be submitted that fully describes the exact facts which are relied on to establish that a diligent effort was made.

The fact that a nonsigning inventor is on vacation or out of town and is therefore temporarily unavailable to sign the declaration is not an acceptable reason for filing under 37 C.F.R. §1.47.

Furthermore, the fact that an inventor is hospitalized and/or is not conscious is not an acceptable reason for filing under 37 C.F.R. §1.47. 37 C.F.R. §1.43 may be available under these circumstances. See MPEP §409.02. Such a petition under 37 C.F.R. §1.47 will be dismissed as inappropriate.

The statement of facts must be signed, where at all possible, by a person having firsthand knowledge of the facts recited therein. Statements based on hearsay will not normally be accepted. Copies of documentary evidence such as internet searches, certified mail return receipts, cover letters of instructions, telegrams, that support a finding that the nonsigning inventor could not be found or reached should be made part of the statement. The steps taken to locate the whereabouts of the nonsigning inventor should be included statement of facts. It is important that the statement contain facts as opposed to conclusions.

REFUSAL TO JOIN

A refusal by an inventor to sign an oath or declaration when the inventor has not been presented with the application papers does not itself suggest that the inventor is refusing to join the application unless it is clear that the inventor understands exactly what he or she is being asked to sign and refuses to accept the application papers. A copy of the application papers should be sent to the last known address of the nonsigning inventor, or, if the nonsigning inventor is represented by counsel, to the address of the nonsigning inventor's attorney. The fact that an application may contain proprietary information does not relieve the 37 C.F.R. §1.47 applicant of the responsibility to present the application papers to the inventor if the inventor is willing to receive the papers in order to sign the oath or declaration. It is noted that the inventor may obtain a complete copy of the application, unless the inventor has assigned his or her interest in the application, and the assignee has requested that the inventor not be permitted access. See MPEP §106. It is reasonable to require that the inventor be presented with the application papers before a petition under 37 C.F.R. §1.47 is granted since such a procedure ensures that the inventor is apprised of the application to which the oath or declaration is directed. In re Gray, 115 USPQ 80 (Comm'r Pat. 1956).

Where a refusal of the inventor to sign the application papers is alleged, the circumstances of the presentation of the application papers and of the refusal must be specified in a statement of facts by the person who presented the inventor with the application papers and/or to whom the refusal was made. Statements by a party not present when an oral refusal is made will not be accepted.

Proof that a bona fide attempt was made to present a copy of the application papers (specification, including claims, drawings, and oath or declaration) to the

> nonsigning inventor for signature, but the inventor refused to accept delivery of the papers or expressly stated that the application papers should not be sent, may be sufficient.
>
> When there is an express oral refusal, that fact along with the time and place of the refusal must be stated in the statement of facts. When there is an express written refusal, a copy of the document evidencing that refusal must be made part of the statement of facts. The document may be redacted to remove material not related to the inventor's reasons for refusal.
>
> When it is concluded by the 37 C.F.R. §1.47 applicant that a nonsigning inventor's conduct constitutes a refusal, all facts upon which that conclusion is based should be stated in the statement of facts in support of the petition or directly in the petition. If there is documentary evidence to support facts alleged in the petition or in any statement of facts, such evidence should be submitted. Whenever a nonsigning inventor gives a reason for refusing to sign the application oath or declaration, that reason should be stated in the petition.

Thus, not only must a copy of the entire application must be sent to the last known address of the non-signing inventor (or the estate representative) with a request that he/she sign the declaration for the patent application–and evidence of that transmittal submitted–but also a reasonable effort must be made to ascertain a current or last known address, and the petition (with fee) must state over the signature and registration number of the Petitioner the last known address and, if appropriate, evidence of the due diligence effort ascertaining same.

Alternatively, an oath or declaration for the patent application in compliance with 37 C.F.R. §§1.63 and 1.64 must be presented.

(The declaration must set forth the inventor's residence, citizenship and post office address. An oath or declaration in compliance with 37 C.F.R. §§1.63 and 1.64 signed by the Rule 1.47 applicant is required.[2])

CONCLUSION

Petitioner's attention is directed to the closing item(s) set forth in the background as that/those to be addressed in any renewed petition–to wit: at least a petition, Petitioner's own representation(s) before the Office, and any transmittal/cover letter evidencing the transmittal of the entire application to the non-signing inventor for review before having the opportunity to sign the oath/declaration.

---

[2] See: MPEP 409.03(b).

Therefore, the instant petition hereby is **dismissed**.

Further correspondence with respect to this matter should be addressed as follows:[3]

By mail: Commissioner for Patents[4]
P.O. Box 1450
Alexandria, VA 22313-1450

By FAX: IFW Formal Filings
(571) 273-8300
ATTN.: Office of Petitions

By hand: Mail Stop: Petition
Customer Service Window
Randolph Building
401 Dulany Street
Alexandria, VA 22314

While telephone inquiries regarding this decision may be directed to the undersigned at (571) 272-3214, it is noted that all practice before the Office is in writing (see: 37 C.F.R. §1.2[5]) and the proper authority for action on any matter in this regard are the statutes (35 U.S.C.), regulations (37 C.F.R.) and the commentary on policy (MPEP). Therefore, no telephone discussion may be controlling or considered authority for Petitioner's/Caller's action(s).

John J. Gillon, Jr.
Senior Attorney
Office of Petitions

---

[3] On July 15, 2005, the Central Facsimile (FAX) Number was changed to (571) 273-8300. Faxes sent to the old number are not routed to the new number, and (571) 273-8300 is the only facsimile number recognized for centralized delivery. (For further information. see: http://www.uspto.gov/web/offices/pac/dapp/opla/preognotice/cfax062005.pdf .)

[4] To determine the appropriate addresses for other subject-specific correspondence, refer to the USPTO Web site at www.uspto.gov.

[5] The regulations at 37 C.F.R. §1.2 provide:

§1.2 Business to be transacted in writing.

All business with the Patent and Trademark Office should be transacted in writing.The personal attendance of applicants or their attorneys or agents at the Patent and Trademark Office is unnecessary. The action of the Patent and Trademark Office will be based exclusively on the written record in the Office. No attention will be paid to any alleged oral promise, stipulation,or understanding in relation to which there is disagreement or doubt.

UNITED STATES PATENT AND TRADEMARK OFFICE

Commissioner for Patents
United States Patent and Trademark Office
P.O. Box 1450
Alexandria, VA 22313-1450
www.uspto.gov

JJGJR.: 124-07

Paper No: __

HEWLETT PACKARD COMPANY
P O BOX 272400, 3404 E. HARMONY ROAD
INTELLECTUAL PROPERTY ADMINISTRATION
FORT COLLINS CO 80527-2400

COPY MAILED
DEC 11 2007
OFFICE OF PETITIONS

In re Application of :
Gupta :
Application No. 11/487,248 : ON PETITION
Filed: 14 July, 2006 :
Attorney Docket No. 200404791-2 :

This is a decision on the papers considered as a petition filed on 25 June, 2007, under 37 C.F.R. §1.47.

For the reasons set forth below, the petition under 37 C.F.R. §1.47 is **GRANTED**.

BACKGROUND

The record indicates:

- the instant application was filed on 14 July, 2006, without, *inter alia*, a fully executed oath/declaration;
- on 7 August, 2006, the Office mailed a Notice of Missing Parts indicating, *inter alia*, that a fully executed oath/declaration was required within two months;
- on 4 December, 2006, Petitioner Charles Griggers (Reg. No. 47,283) filed, *inter alia*, the original petition, and, *inter alia*, an un-executed oath/declaration executed by him and no the statement of the assignee as to who was authorized to sign, and irreparable harm, and no evidence of diligence in determining the current/reasonably believed last known

residential address of the non-signing inventor, as such requirements are set forth at 37 C.F.R. §1.47 and discussed at length at MPEP §409.03(b)–and for these reasons, the petition was dismissed on 23 April, 2007;

- The instant petition seeks to address these matters and provides the statements and documentary support to do so, including but not limited to the oath/declaration executed by a representative of the assignee and statement of authority to execute, along with the statement of irreparable harm.

Out of an abundance of caution, Petitioners always are reminded that those registered to practice *and* all others who make representations before the Office are reminded to inquire into the underlying facts of representations made to the Office and support averments with the appropriate documentation–since all owe to the Office the continuing duty to disclose.[1]

---

[1] See supplement of 17 June, 1999. The Patent and Trademark Office is relying on petitioner's duty of candor and good faith and accepting a statement made by Petitioner. See Changes to Patent Practice and Procedure, 62 Fed. Reg. at 53160 and 53178, 1203 Off. Gaz. Pat. Office at 88 and 103 (responses to comments 64 and 109)(applicant obligated under 37 C.F.R. §10.18 to inquire into the underlying facts and circumstances when providing statements to the Patent and Trademark Office).

Specifically, the regulations at 37 C.F.R. §10.18 provide:

§ 10.18 Signature and certificate for correspondence filed in the Patent and Trademark Office.
(a) For all documents filed in the Office in patent, trademark, and other non-patent matters, except for correspondence that is required to be signed by the applicant or party, each piece of correspondence filed by a practitioner in the Patent and Trademark Office must bear a signature by such practitioner complying with the provisions of §1.4(d), §1.4(e), or § 2.193(c)(1) of this chapter.
(b) By presenting to the Office (whether by signing, filing, submitting, or later advocating) any paper, the party presenting such paper, whether a practitioner or non-practitioner, is certifying that—

(1) All statements made therein of the party's own knowledge are true, all statements made therein on information and belief are believed to be true, and all statements made therein are made with the knowledge that whoever, in any matter within the jurisdiction of the Patent and Trademark Office, knowingly and willfully falsifies, conceals, or covers up by any trick, scheme, or device a material fact, or makes any false, fictitious or fraudulent statements or representations, or makes or uses any false writing or document knowing the same to contain any false, fictitious or fraudulent statement or entry, shall be subject to the penalties set forth under 18 U.S.C. 1001, and that violations of this paragraph may jeopardize the validity of the application or document, or the validity or enforceability of any patent, trademark registration, or certificate resulting therefrom; and

(2) To the best of the party's knowledge, information and belief, formed after an inquiry reasonable under the circumstances, that —

(i) The paper is not being presented for any improper purpose, such as to harass someone or to cause unnecessary delay or needless increase in the cost of prosecution before the Office;

(ii) The claims and other legal contentions therein are warranted by existing law or by a nonfrivolous argument for the extension, modification, or reversal of existing law or the establishment of new law;

(iii) The allegations and other factual contentions have evidentiary support or, if specifically so identified, are likely to have evidentiary support after a reasonable opportunity for further investigation or discovery; and

(iv) The denials of factual contentions are warranted on the evidence, or if specifically so identified, are reasonably based on a lack of information or belief.

(c) Violations of paragraph (b)(1) of this section by a practitioner or non-practitioner may jeopardize the validity of the application or document, or the validity or enforceability of any patent, trademark registration, or certificate resulting therefrom. Violations of any of paragraphs (b)(2)(i) through (iv) of this section are, after notice and reasonable opportunity to respond, subject to such sanctions as deemed appropriate by the Commissioner, or the Commissioner's designee, which may include, but are not limited to, any combination of —

(1) Holding certain facts to have been established;
(2) Returning papers;
(3) Precluding a party from filing a paper, or presenting or contesting an issue;
(4) Imposing a monetary sanction;
(5) Requiring a terminal disclaimer for the period of the delay; or
(6) Terminating the proceedings in the Patent and Trademark Office.

(d) Any practitioner violating the provisions of this section may also be subject to disciplinary action. See § 10.23(c)(15).
[Added 50 FR 5175, Feb. 6, 1985, effective Mar. 8, 1985; para. (a) revised, 58 FR 54494, Oct. 22, 1993, effective Nov. 22, 1993; paras. (a) &

This application and papers have been reviewed and found in compliance with 37 C.F.R. §1.47(b).

This application hereby is **ACCORDED status under 37 C.F.R. §1.47(b)**.

As provided under 37 C.F.R. §1.47(b), the Office will forward notice of this application's filing to the non-signing inventor at the address given in the petition.

Notice of the filing of this application also will be published in the Official Gazette.

This file is being released to OIPE for processing as necessary to reflect the instant decision before being released for examination in due course.

While telephone inquiries regarding this decision may be directed to the undersigned at (571) 272-3214, it is noted that all practice before the Office is in writing (see: 37 C.F.R. §1.2[2]) and the proper authority for action on any matter in this regard are the statutes (35 U.S.C.), regulations (37 C.F.R.) and the commentary on policy (MPEP). Therefore, no telephone discussion may be controlling or considered authority for Petitioner's/Caller's action(s).

John J. Gillon, Jr.
Senior Attorney
Office of Petitions

(b) revised, paras. (c) & (d) added, 62 FR 53131, Oct. 10, 1997, effective Dec. 1, 1997; para. (a) revised, 69 FR 56481, Sept. 21, 2004, effective Oct. 21, 2004]

[2] The regulations at 37 C.F.R. §1.2 provide:

§1.2 Business to be transacted in writing.

All business with the Patent and Trademark Office should be transacted in writing. The personal attendance of applicants or their attorneys or agents at the Patent and Trademark Office is unnecessary. The action of the Patent and Trademark Office will be based exclusively on the written record in the Office. No attention will be paid to any alleged oral promise, stipulation, or understanding in relation to which there is disagreement or doubt.

UNITED STATES PATENT AND TRADEMARK OFFICE

Commissioner for Patents
United States Patent and Trademark Office
P.O. Box 1450
Alexandria, VA 22313-1450
www.uspto.gov

JJGJR.: 124-07

Paper No: __

ANKUR GUPTA
APARTMENT NO. 5/PINE BLOCK B1
PRESTIGE GREENWOODS
NAGAVARPALYA
C.V. RAMAN NAGAR
BANGALORE KAMATAKA 560093
INDIA

In re Application of	:	
Gupta	:	
Application No. 11/487,248	:	COMMUNICATION
Filed: 14 July, 2006	:	
Attorney Docket No. 200404791-2	:	

Dear Ankur Gupta:

You are named as inventor in the above identified United States patent application, filed under the provisions of 35 U.S.C. §116 (United States Code), and 37 C.F.R. §1.47,[1] ¶a, Rules of

---

[1] The regulations at 37 C.F.R. §1.47 provide:

§ 1.47 Filing when an inventor refuses to sign or cannot be reached.

(a) If a joint inventor refuses to join in an application for patent or cannot be found or reached after diligent effort, the application may be made by the other inventor on behalf of himself or herself and the nonsigning inventor. The oath or declaration in such an application must be accompanied by a petition including proof of the pertinent facts, the fee set forth in §1.17(h), and the last known address of the nonsigning inventor. The nonsigning inventor may subsequently join in the application by filing an oath or declaration complying with §1.63.

(b) Whenever all of the inventors refuse to execute an application for patent, or cannot be found or reached after diligent effort, a person to whom an inventor has assigned or agreed in writing to assign the invention, or who otherwise shows sufficient proprietary interest in the matter justifying such action, may make application for patent on behalf of and as agent for all the inventors. The oath or declaration in such an application must be accompanied by a petition including proof of the pertinent facts, a showing that such action is necessary to preserve the rights of the parties or to prevent irreparable damage, the fee set forth in §1.17(h), and the last known address of all of the inventors. An inventor may subsequently join in the application by filing an oath or declaration complying with §1.63.

© The Office will send notice of the filing of the application to all inventors who have not joined in the application at the address(es) provided in the petition under this section, and publish notice of the filing of the application in the *Official Gazette*. The Office may dispense with this notice provision in a continuation or divisional application, if notice regarding the filing of the prior application was given to the nonsigning inventor(s).

[47 Fed. Reg. 41275, Sept. 17, 1982, effective Oct. 1, 1982; 48 Fed. Reg. 2709, Jan. 20, 1983, effective Feb. 27, 1983; revised, 62 Fed. Reg. 53131, Oct. 10, 1997, effective Dec. 1, 1997; revised, 65 Fed. Reg. 54604, Sept. 8, 2000, effective Nov. 7, 2000]

Practice in Patent Cases. Should a patent be granted on the application you will be designated therein as inventor.

As a named inventor you are entitled to inspect any paper in the file wrapper of the application, order copies of all or any part thereof (at a prepaid cost per 37 C.F.R. §1.19) or make your position of record in the application. Alternatively, you may arrange to do any of the preceding through a registered patent attorney or agent presenting written authorization from you. If you care to join the application, counsel of record (see below) would presumably assist you. Joining in the application would entail the filing of an appropriate oath or declaration by you pursuant to 37 C.F.R. §1.63.

Requests for information regarding your application should be directed to the File Information Unit at (703) 308-2733.

Information regarding how to pay for and order a copy of the application, or a specific paper in the application, should be directed to Certification Division at (703) 308-9726 or toll-free: (800) 972-6382 (outside the Washington D.C. area).

While telephone inquiries regarding this decision may be directed to the undersigned at (571) 272-3214, it is noted that all practice before the Office is in writing (see: 37 C.F.R. §1.2[2]) and the proper authority for action on any matter in this regard are the statutes (35 U.S.C.), regulations (37 C.F.R.) and the commentary on policy (MPEP). Therefore, no telephone discussion may be controlling or considered authority for Petitioner's/Caller's action(s).

John J. Gillon, Jr.
Senior Attorney
Office of Petitions

Counsel of Record:
HEWLETT PACKARD COMPANY
P O BOX 272400, 3404 E. HARMONY ROAD
INTELLECTUAL PROPERTY ADMINISTRATION
FORT COLLINS CO 80527-2400

---

[2] The regulations at 37 C.F.R. §1.2 provide:

§1.2 Business to be transacted in writing.

All business with the Patent and Trademark Office should be transacted in writing. The personal attendance of applicants or their attorneys or agents at the Patent and Trademark Office is unnecessary. The action of the Patent and Trademark Office will be based exclusively on the written record in the Office. No attention will be paid to any alleged oral promise, stipulation, or understanding in relation to which there is disagreement or doubt.

UNITED STATES PATENT AND TRADEMARK OFFICE

COMMISSIONER FOR PATENTS
UNITED STATES PATENT AND TRADEMARK OFFICE
P.O. BOX 1450
ALEXANDRIA, VA 22313-1450
www.uspto.gov

PIONEER HI-BRED INTERNATIONAL, INC.
7250 N.W. 62ND AVENUE
P.O. BOX 552
JOHNSTON IA 50131-0552

MAILED

FEB 05 2009

OFFICE OF PETITIONS

Applicant: Tao
Appl. No.: 11/487,300
Filing Date: July 14, 2006
Title: NOVEL FRT RECOMBINATION SITES AND METHODS OF USE
Attorney Docket No.: 1525-1
Pub. No.: US 2008/0047031 A1
Pub. Date: February 21, 2008

This is a decision on the request for a corrected patent application publication under 37 CFR 1.221(b), received on April 3, 2008, for the above-identified application.

The request is DISMISSED.

Applicant requests that the application be republished because the patent application publication contains material errors in several paragraphs in the specification, wherein several superscripts were not printed correctly and in claim 5 wherein "att" was erroneously printed as "aft".

37 CFR 1.221(b) is applicable "only when the Office makes a material mistake which is apparent from Office records. Any request for a corrected or revised patent application publication other than as provided in paragraph (a) of this section must be filed within two months from the date of the patent application publication. This period is not extendable." A material mistake must affect the public's ability to appreciate the technical disclosure of the patent application publication, to determine the scope of the patent application publication, or to determine the scope of the provisional rights that an applicant may seek to enforce upon issuance of a patent. [1]

The errors in the specification and in claim 5 noted by requestor in the specification are not material Office errors under 37 CFR 1.221. The text was not printed correctly due to the quality of the text. The errors noted by requestor in the equations in this published application are due to the quality of the text, as the font is very small and faint. The quality of some of the text is poor, as it is small, which makes it difficult to electronically reproduce by digital imaging and optical character recognition. See 37 CFR 1.52. Furthermore, one of skill in the art would be able to appreciate applicant's technical disclosure despite the errors due to the surrounding context.

[1] Changes to Implement Eighteen-Month Publication of Patent Applications, 65 FR 57023, 57038 (Sept. 20, 2000), 1239, Off. Gaz. Pat. Office Notices 63, 75 (Oct. 10, 2000) (final rule).

Applicant is advised that he may want to file application papers that are clearer, as the errors are due to the quality of the text. The text with respect to the superscripts and subscripts are very small, which makes it difficult to read and to electronically reproduce by digital imaging and optical character recognition. Applicants have been advised to file applications having cleaner and larger text with sufficient clarity and contrast to permit reproduction, such as electronic reproduction by digital imaging and optical character recognition, which will avoid errors in the patent application publication process. See 37 CFR 1.52.

Applicants are advised that a "request for republication of an application previously published" may be filed under 37 CFR 1.221(a). Such a request for republication "must include a copy of the application in compliance with the Office electronic filing system requirements and be accompanied by the publication fee set forth in § 1.18(d) and the processing fee set forth in § 1.17(i)." If the request for republication does not comply with the electronic filing system requirements, the republication will not take place and the publication fee set forth in § 1.18(d) will be refunded. The processing fee will be retained.

Any request for republication under 37 CFR 1.221(a) must be submitted via the EFS system as a "Pre-Grant Publication" and any questions or request for reconsideration of the decision should be addressed as follows:

By mail to: Mail Stop PGPUB
Commissioner for Patents
P.O. Box 1450
Alexandria, Va. 22313-1450

A guide for filing a request for a Pre-Grant Publication, such as a request for republication, may be found on the link below:

http://www.uspto.gov/ebc/portal/tutorials.htm

Inquiries relating to this matter may be directed to Michael Cygan, Legal Advisor, at (571) 272-7700, or the undersigned at (571) 272-7709.

Mark Polutta
Senior Legal Advisor
Office of Patent Legal Administration
Office of the Deputy Commissioner
for Patent Examination Policy

UNITED STATES PATENT AND TRADEMARK OFFICE

Commissioner for Patents
United States Patent and Trademark Office
P.O. Box 1450
Alexandria, VA 22313-1450
www.uspto.gov

Miles & Stockbridge, PC
1751 Pinnacle Drive
Suite 500
McLean, VA 22102-3833

COPY MAILED

MAY 09 2008

In re Application of :
Noel Simms et al. :
Application No. 11/487,319 : DECISION ON PETITION
Filed: July 17, 2006 : TO WITHDRAW
Attorney Docket No. T2170-906666US03 : FROM RECORD
:

This is a decision on the Request to Withdraw as attorney or agent under 37 C.F.R. § 1.36(b) or 37 C.F.R. § 10.40 filed November 14, 2007.

The request is **APPROVED**.

A grantable request to withdraw as attorney/agent of record must be signed by every attorney/agent seeking to withdraw or contain a clear indication that one attorney is signing on behalf of another/others. A request to withdraw will not be approved unless at least 30 (thirty) days would remain between the date of approval and the later of the expiration date of a time to file a response or the expiration date of the maximum time period which can be extended under 37 C.F.R. § 1.136(a).

The request was signed by Edward J. Kondracki on behalf of all attorneys/agents associated with customer number 000181. All attorneys/agents of record associated with customer number 000181 have been withdrawn.

The request to change the correspondence of record is not acceptable as the requested correspondence address is not that of (1) the first named signing inventor; or (2) an intervening assignee of the entire interest under 37 C.F.R. 3.71. Accordingly, all correspondence will be mailed applicant. A courtesy copy of this decision will be mailed to the address noted on the request to withdraw. If this firm desires to receive future correspondence regarding this application, the proper power of attorney documents must be submitted.

Applicant is reminded that there is no attorney of record at this time.

Telephone inquires concerning this decision should be directed to Kimberly Inabinet at 571-272-4618.

Kimberly Inabinet
Petitions Examiner
Office of Petitions

cc: Noel Simms
4711 N 36th Street
Arlington, VA 22207

cc: Dennis P. Clarke
7422 Old Maple Square
McLean, VA 22102

UNITED STATES PATENT AND TRADEMARK OFFICE

UNITED STATES DEPARTMENT OF COMMERCE
United States Patent and Trademark Office
Address: COMMISSIONER FOR PATENTS
P.O. Box 1450
Alexandria, Virginia 22313-1450
www.uspto.gov

APPLICATION NUMBER	FILING OR 371(C) DATE	FIRST NAMED APPLICANT	ATTY. DOCKET NO./TITLE
11/487,319	07/17/2006	Noel Simms	T2170-906666US03

CONFIRMATION NO. 6688

181
MILES & STOCKBRIDGE PC
1751 PINNACLE DRIVE
SUITE 500
MCLEAN, VA 22102-3833

POWER OF ATTORNEY NOTICE

OC00000029809330

Date Mailed: 05/08/2008

NOTICE REGARDING CHANGE OF POWER OF ATTORNEY

This is in response to the Power of Attorney filed 11/14/2007.

- The withdrawal as attorney in this application has been accepted. Future correspondence will be mailed to the new address of record. 37 CFR 1.33.

/kainabinet/

Office of Data Management, Application Assistance Unit (571) 272-4000, or (571) 272-4200, or 1-888-786-0101

UNITED STATES PATENT AND TRADEMARK OFFICE

Commissioner for Patents
United States Patent and Trademark Office
P.O. Box 1450
Alexandria, VA 22313-1450
www.uspto.gov

NOEL SIMMS
4711 N. 36TH STREET
ARLINGTON, VA 22207

COPY MAILED

JAN 19 2010

In re Application of
Noel Simms, et al.
Application No. 11/487,319
Filed: July 17, 2006
Attorney Docket No.

DECISION ON PETITION

This is a decision on the petition, filed October 27, 2009, which is being treated as a petition under 37 CFR 1.181 (no fee) requesting withdrawal of the holding of abandonment in the above-identified application.

The petition is **GRANTED**.

This application was held abandoned for failure to reply to the non-final Office action mailed February 12, 2009, which set a three (3) month shortened statutory period for reply. A Notice of Abandonment was mailed on September 16, 2009.

Petitioner asserts that the Office action dated February 12, 2009 was not received.

A review of the written record indicates an irregularity in the mailing of the Office action of February 12, 2009. In this regard, the Office action in question was returned to the Office on March 9, 2009. Office records indicate that there was a Request for Withdrawal of Attorney filed November 14, 2007 and processed May 8, 2008. The request indicated that the new correspondence address should be mailed to Dennis P. Clarke at 7422 Old Maple Square, Mclean, VA 22102, however, the request should have been dismissed because the practitioners were not appointed by customer number. In any event, the Office will no longer accept address changes to a new practitioner of law firm filed with a Request, absent the filing of a power of attorney to the new representative. The Office will either change the correspondence address of record to the most current address information provided for the assignee of the entire interest who properly became of record under 37 CFR 3.71 or, the most current address information provided for the first named inventor. Therefore, as stated in the Decision on Petition to Withdraw from Record mailed May 9, 2008 the correspondence address of record in this application is that of the first named inventor Noel Simms. Petitioner was mailed a courtesy copy of the May 9, 2008 decision and should be aware of such. Accordingly, as the Office action and the Notice of Abandonment was returned to the Office as undeliverable, the Notice of Abandonment mailed September 16, 2009 is hereby **vacated** and **the holding of abandonment withdrawn**.

Petitioner should also note that the Power of Attorney filed in conjunction with this petition has not been received.

The application file does not indicate a change of address has been filed in this case, although the address given on the petition differs from the address of record. A change of address should be filed in this case in accordance with MPEP 601.03. A courtesy copy of this decision is being mailed to the address noted on the petition. However, **until otherwise instructed, all future correspondence regarding this application will be mailed solely to the above address of record**.

Telephone inquiries concerning this decision should be directed to April M. Wise at 571-272-1642. All other inquiries concerning the examination or status of this application should be directed to the Technology Center.

This application is being referred to the Technology Center technical support staff of Art Unit 2612 to act on the reply received October 27, 2009.

/dab/
David Bucci
Petitions Examiner
Office of Petitions

cc: DENNIS CLARKE
7422 OLD MAPLE SQUARE
MCLEAN, VA 22102

UNITED STATES PATENT AND TRADEMARK OFFICE

Commissioner for Patents
United States Patent and Trademark Office
P.O. Box 1450
Alexandria, VA 22313-1450
www.uspto.gov

JAGTIANI + GUTTAG
10363-A DEMOCRACY LANE
FAIRFAX VA 22030

MAILED

MAR 30 2009

OFFICE OF PETITIONS

In re Application of :
GRANTHAM, Dockins W. :
Application No. 11/487,320 : DECISION ON PETITION
Filed: July 17, 2006 : TO WITHDRAW
Attorney Docket No. **CARD-0003-UT1** : FROM RECORD
:

This is a decision on the Request to Withdraw as attorney or agent of record under 37 C.F.R. § 1.36(b), filed November 10, 2008.

The request is **NOT APPROVED** because it is moot.

A review of the file record indicates that the power of attorney filed February 27, 2009 reinstates Steven B. Kelber, Registration No. 30,073, as an attorney of record in the above patent application. Accordingly, the request to withdraw under 37 C.F.R. § 1.36(b) is moot.

All future communications from the Office will continue to be directed to the above-listed address until otherwise notified by applicant.

Telephone inquires concerning this decision should be directed to Michelle R. Eason at 571-272-4231.

Michelle R. Eason
Paralegal Specialist
Office of Petitions

UNITED STATES PATENT AND TRADEMARK OFFICE

Commissioner for Patents
United States Patent and Trademark Office
P.O. Box 1450
Alexandria, VA 22313-1450
www.uspto.gov

CHRISTOS TSIRONIS
1603 St. REGIS
D.D.O QC H9B-3H7
CANADA

COPY MAILED

AUG 1 4 2008

In re Application of :
Tsironis, Christos :
Application No. 11/487,346 : ON PETITION
Filed: July 17, 2006 :
Title: Harmonic Load Pull Tuner with Resonant Prematching Module :

This is a decision on the petition under 37 C.F.R. § 1.137(b), filed May 8, 2008, to revive the above-identified application.

The petition is **DISMISSED**.

The rules and statutory provisions governing the operations of the U.S. Patent and Trademark Office require payment of a fee on filing each petition to revive an abandoned application for patent based on unintentional delay or to accept an unintentionally delayed payment of a fee for issuing a patent. In this instance, the fee required by law is $1,540.00. If applicant can qualify as a "small entity" and does so prior to or together with the payment of the fee, the fee will be $770.00. See 37 CFR 1.27.

The petition in the above-identified application was not accompanied by payment of the required fee. No consideration on the merits can be given to the petition until the required fee is received.

Further correspondence with respect to this matter should be addressed as follows:

By mail: Mail Stop PETITIONS
Commissioner for Patents
Post Office Box 1450
Alexandria, VA 22313-1450

By hand: Customer Window located at:
U.S. Patent and Trademark Office
Customer Service Window Randolph Building
401 Dulany Street
Alexandria, VA 22314

By fax: (571) 273-8300
ATTN: Office of Petitions

Any questions concerning this matter may be directed to the undersigned at (571) 272-3206.

Liana Walsh
Petitions Examiner
Office of Petitions

UNITED STATES PATENT AND TRADEMARK OFFICE

Commissioner for Patents
United States Patent and Trademark Office
P.O. Box 1450
Alexandria, VA 22313-1450
www.uspto.gov

CHRISTOS TSIRONIS
1603 ST. REGIS
D.D.O QC H9B-3H7 CA CANADA

COPY MAILED

OCT 0 1 2008

OFFICE OF PETITIONS

In re Application of :
Tsironis, Christos :
Application No. 11/487,346 : ON PETITION
Filed: July 17, 2006 :
Title: Harmonic Load Pull Tuner with :
Resonant Prematching Module

This is a decision on the renewed petition under 37 C.F.R. § 1.137(b), filed August 28, 2008, to revive the above-identified application.

The petition is **GRANTED**.

The petition satisfies the requirements of 37 CFR 1.137(b) in that petitioner has supplied (1) the reply in the form of Corrected Drawings, (2) the petition fee, and (3) a proper statement of unintentional delay.

37 CFR 1.137(b)(3) requires a statement that the entire delay in filing the required reply from the due date for the reply until the filing of a grantable petition pursuant to 37 CFR 1.137(b) was unintentional. As the statement contained in the instant petition varies from the language required by 37 CFR 1.137(b)(3), the statement contained in the instant petition is being construed as the statement required by 37 CFR 1.137(b)(3) and petitioner must notify the Office if this is **not** a correct interpretation of the statement contained in the instant petition.

Telephone inquiries concerning this decision should be directed to the undersigned at (571) 272-3206.

This matter is being referred to the Office of Data Management for processing into a patent.

Liana Walsh
Petitions Examiner
Office of Petitions

UNITED STATES PATENT AND TRADEMARK OFFICE

Commissioner for Patents
United States Patent and Trademark Office
P.O. Box 1450
Alexandria, VA 22313-1450
www.uspto.gov

DEBORAH A. GADOR
P.O. BOX 4133
GANEL TIKVA 55900 IL ISRAEL

COPY MAILED

MAR 10 2009

OFFICE OF PETITIONS

In re Application of :
SHARON, IGAL :
Application No. 11/487,411 :
Filed: 07/17/2006 :
Attorney Docket No. 19/1722 :

DECISION ON PETITION

This is a decision on the petition under 37 CFR 1.137(b), filed November 18, 2008, to revive the above-identified application.

The petition is **GRANTED**.

This application became abandoned for failure to pay the issue and publication fees as required by the Notice of Allowance and Fee(s) Due mailed on July 24, 2008, which set a three (3) month statutory period for reply. Accordingly, the application became abandoned on October 25, 2008. A Notice of Abandonment was mailed on November 17, 2008.

The petition satisfies the requirements of 37 CFR 1.137(b) in that petitioner has supplied (1) the reply in the form of payment of the issue fee and publication fee, (2) the petition fee, and (3) a proper statement of unintentional delay.

This matter is being forwarded to the Office of Data Management for processing into a patent.

Telephone inquiries concerning the issuance of the application into a patent should be directed to the Office of Data Management, Customer Service at (571) 272-4200.

Telephone inquiries specifically concerning this decision should be directed to the undersigned at (571) 272-3211.

C. T. Donnell

Christina Tartera Donnell
Senior Petitions Attorney
Office of Petitions

UNITED STATES PATENT AND TRADEMARK OFFICE

UNITED STATES DEPARTMENT OF COMMERCE
United States Patent and Trademark Office
Address: COMMISSIONER FOR PATENTS
P.O. Box 1450
Alexandria, Virginia 22313-1450
www.uspto.gov

APPLICATION NO.	FILING DATE	FIRST NAMED INVENTOR	ATTORNEY DOCKET NO.	CONFIRMATION NO.
11/487,462	07/17/2006	Toru Katsurai	Q96025	5911

7590 06/22/2009

SUGHRUE-265550
2100 PENNSYLVANIA AVE. NW
WASHINGTON, DC 20037-3213

EXAMINER	
HSIEH, SHIH WEN	

ART UNIT	PAPER NUMBER
2861	

MAIL DATE	DELIVERY MODE
06/22/2009	PAPER

DECISION GRANTING PETITION UNDER 37 CFR 1.138(d)

The declaration of express abandonment is recognized

This is in response to the petition under 37 CFR 1.138(d), requesting for a refund of any previously paid search fee and excess claims fee in the above-identified application.

The petition is granted.

The express abandonment is recognized. Any previously paid search fee and excess claims fee are hereby refunded.

Telephone inquiries should be directed to the Office of Data Management at (571) 272-4200.

Nimi Farmer

Patent Publication Branch
Office of Data Management

Refund Ref:
06/24/2009 NFARMER 0000167722

CHECK Refund Total: $500.00

Adjustment date: 06/24/2009 NFARMER
07/19/2006 MBERHE 00000043 11487462
02 FC:1111 -500.00 OP

UNITED STATES PATENT AND TRADEMARK OFFICE

Commissioner for Patents
United States Patent and Trademark Office
P.O. Box 1450
Alexandria, VA 22313-1450
www.uspto.gov

G. LINK CO., LTD.
3550 BELL ROAD
MINOOKA IL 60447

MAILED

MAR 12 2010

OFFICE OF PETITIONS

In re Application of :
Chun-Chang LAI et al. :
Application No. 11/487,490 : DECISION ON PETITION
Filed: July 17, 2006 :
Attorney Docket No. **BHT-3127-123** :

This is a decision on the petition under the unintentional provisions of 37 CFR 1.137(b), filed December 08, 2009, to revive the above-identified application.

The petition is **GRANTED**.

The application became abandoned for failure to timely file a reply within the meaning of 37 CFR 1.113 to the final Office action of December 11, 2008. The proposed reply required for consideration of a petition to revive must be a Notice of Appeal (and appeal fee required by 37 CFR 41.20(b)(2), an amendment that *prima facie* places the application in condition for allowance, a Request for Continued Examination and submission (37 CFR 1.114), or the filing of a continuing application under 37 CFR 1.53(b). See MPEP 711.03(c)(III)(A)(2). A one (1) month extension of time pursuant to the provisions of 37 CFR 1.136(a) was obtained. Accordingly, the date of abandonment of this application is April 14, 2009.

The petition satisfies the requirements of 37 CFR 1.137(b) in that petitioner has supplied (1) the reply in the form of a Request for Continued Examination (RCE) and fee of $810, and the submission required by 37 CFR 1.114; (2) the petition fee of $1620; and (3) a proper statement of unintentional delay. Accordingly, the reply to the final Office Action of December 11, 2008 is accepted as having been unintentionally delayed.

The power of attorney has been processed and made of record.

Telephone inquiries concerning this decision should be directed to Tredelle Jackson at (571) 272-2783.

This application is being referred to Technology Center AU 2835 for processing of the RCE and for appropriate action by the Examiner in the normal course of business on the amendment submitted in accordance with 37 CFR 1.114.

Ramesh Krishnamurthy
Petitions Examiner
Office of Petitions

SPE RESPONSE FOR CERTIFICATE OF CORRECTION

Paper No.: _____

DATE : 03/02/10

TO SPE OF : ART UNIT 2841

SUBJECT : Request for Certificate of Correction for Appl. No.: 11487506 Patent No.: 7663888

Please respond to this request for a certificate of correction within 7 days.

FOR IFW FILES:

Please review the requested changes/corrections as shown in the **COCIN** document(s) in the IFW application image. No new matter should be introduced, nor should the scope or meaning of the claims be changed.

Please complete the response (see below) and forward the completed response to scanning using document code **COCX**.

FOR PAPER FILES:

Please review the requested changes/corrections as shown in the attached certificate of correction. Please complete this form (see below) and forward it with the file to:

Certificates of Correction Branch (C of C)
Randolph Square 9D40-D
Palm Location 7580
You can fax the Directors/SPE response to 571-270-9990

Lamonte Newsome
Certificates of Correction Branch
703-756-1574

Thank You For Your Assistance

The request for issuing the above-identified correction(s) is hereby:
Note your decision on the appropriate box.

XApproved	**All** changes apply.
☐ **Approved in Part**	Specify below which changes **do not** apply.
☐ **Denied**	State the reasons for denial below.

Comments: The Request for Correction dated 2/23/2010 is okay to enter.

SPE RESPONSE FOR CERTIFICATE OF CORRECTION

/Jinhee Lee/

SPE Art Unit

2841

UNITED STATES PATENT AND TRADEMARK OFFICE

Commissioner for Patents
United States Patent and Trademark Office
P.O. Box 1450
Alexandria, VA 22313-1450
www.uspto.gov

OBLON, SPIVAK, MCCLELLAND, MAIER & NEUSTADT, P.C.
1940 DUKE STREET
ALEXANDRIA VA 22314

COPY MAILED

JUN 19 2007

OFFICE OF PETITIONS

In re Application of :
Fukuda :
Application No. 11/487,514 : DECISION ON PETITION
Filed: July 17, 2006 : UNDER 37 CFR 1.181
Attorney Docket No. 293940US2S :
For: SEMICONDUCTOR MEMORY DEVICE

This is a decision on the petition under 37 CFR 1.181, filed May 25, 2007, to withdraw the holding of abandonment of the above-identified application.

The petition under 37 CFR 1.181 is **GRANTED**.

This application was held abandoned for failure to timely reply to the Notice to File Missing Parts of Nonprovisional Application, mailed August 7, 2006, which set an extendable two month period for reply. Having no record of receiving an extension of time or reply, the Office contended the application became abandoned on October 8, 2006. A Notice of Abandonment was mailed on April 13, 2007.

Petitioner asserts that a proper reply to the Notice, in the form of an executed combined declaration, was timely received in the Office on August 22, 2006. In support of this assertion, petitioner has provided a copy of applicant's itemized postcard receipt showing an Office of Initial Patent Examination date stamp affixed thereto, citing August 22, 2006 as the date of receipt. The postcard lists that the filing included, *inter alia*, a combined declaration, petition, and power of attorney.

The return postcard constitutes *prima facie* evidence that the items listed thereon were received in the Office on August 22, 2006. MPEP 503. Petitioners have provided a copy of the August 22, 2006 correspondence. Accordingly, the petition is granted, the holding of abandonment is withdrawn, and the April 13, 2007 Notice of Abandonment is vacated.

After the mailing of this decision, the application file will be returned to the Office of Initial Patent Examination for further processing, using the copy of the combined declaration re-submitted with the present petition.

Any inquiries pertaining to this matter may be directed to the undersigned at (571) 272-3230.

Shirene Willis Brantley
Senior Petitions Attorney
Office of Petitions
Office of the Deputy Commissioner
for Patent Examination Policy

UNITED STATES PATENT AND TRADEMARK OFFICE

Commissioner for Patents
United States Patent and Trademark Office
P.O. Box 1450
Alexandria, VA 22313-1450
www.uspto.gov

STANDLEY LAW GROUP LLP
495 METRO PLACE SOUTH
SUITE 210
DUBLIN, OH 43017

COPY MAILED

APR 15 2008

OFFICE OF PETITIONS

In re Application of :
Kimber D. Fogelman, et al. :
Application No. 11/487,581 : DECISION ON PETITION
Filed: July 17, 2006 : TO WITHDRAW
Attorney Docket No. THA2256-015 : FROM RECORD
:

This is a decision on the Request to Withdraw as attorney or agent of record under 37 C.F.R. § 1.36(b), filed October 25, 2007.

The request is **APPROVED**.

A grantable request to withdraw as attorney/agent of record must be signed by every attorney/agent seeking to withdraw or contain a clear indication that one attorney is signing on behalf of another/others. A request to withdraw will not be approved unless at least 30 (thirty) days would remain between the date of approval and the later of the expiration date of a time to file a response or the expiration date of the maximum time period which can be extended under 37 C.F.R. § 1.136(a).

The request was signed by Eric M. Gayanon behalf of all attorneys of record who are associated with customer No. 08698.

All attorneys/agents associated with the Customer Number 08698 have been withdrawn.

Applicant is reminded that there is no attorney of record at this time.

The request to change the correspondence of record is not acceptable as the requested correspondence address is not that of: (1) the first named signing inventor; or (2) an intervening assignee of the entire interest under 37 C.F.R 3.71. All future communications from the Office will be directed to the first named signing inventor at the first copied address below until otherwise properly notified by the applicant.

In order to request or take action in a patent matter, the assignee must establish its ownership of the patent to the satisfaction of the Director. In this regard, a Statement under 37 CFR 3.73(b) must

have either: (i) documentary evidence of a chain of title from the original owner to the assignee (*e.g.*, copy of an executed assignment), and a statement affirming that the documentary evidence of the chain of title from the original owner to the assignee was or concurrently is being submitted for recordation pursuant to § 3.11; or (ii) a statement specifying where documentary evidence of a chain of title from the original owner to the assignee is recorded in the assignment records of the Office (*e.g.*, reel and frame number).

There are no pending Office actions at the present time.

Telephone inquiries concerning this decision should be directed to undersigned at 571-272-1642.

April M. Wise
Petitions Examiner
Office of Petitions

cc: KIMBER D. FOGELMAN
710 LORNA LANE
HOCKESSIN, DE 19707

cc: MEYER, LINKOVIC & SCOTTLLP
ATTENTION : DAVID G. OBERDICK, ESQ.
1300 OLIVER BUILDING
PITTSBURGH, PA 15222

UNITED STATES PATENT AND TRADEMARK OFFICE

UNITED STATES DEPARTMENT OF COMMERCE
United States Patent and Trademark Office
Address: COMMISSIONER FOR PATENTS
P.O. Box 1450
Alexandria, Virginia 22313-1450
www.uspto.gov

APPLICATION NUMBER	FILING OR 371(C) DATE	FIRST NAMED APPLICANT	ATTY. DOCKET NO./TITLE
11/487,581	07/17/2006	Kimber D. Fogelman	THA2256-015

CONFIRMATION NO. 5039

POWER OF ATTORNEY NOTICE

8698
STANDLEY LAW GROUP LLP
495 METRO PLACE SOUTH
SUITE 210
DUBLIN, OH 43017

OC0000000029380160

Date Mailed: 04/14/2008

NOTICE REGARDING CHANGE OF POWER OF ATTORNEY

This is in response to the Power of Attorney filed 10/25/2007.

- The withdrawal as attorney in this application has been accepted. Future correspondence will be mailed to the new address of record. 37 CFR 1.33.

/amwise/

Office of Data Management, Application Assistance Unit (571) 272-4000, or (571) 272-4200, or 1-888-786-0101

UNITED STATES PATENT AND TRADEMARK OFFICE

UNITED STATES DEPARTMENT OF COMMERCE
United States Patent and Trademark Office
Address: COMMISSIONER FOR PATENTS
P.O. Box 1450
Alexandria, Virginia 22313-1450
www.uspto.gov

MILLEN, WHITE, ZELANO & BRANIGAN, P.C.
2200 CLARENDON BLVD.
SUITE 1400
ARLINGTON, VA 22201

Mail Date: 04/20/2010

Applicant	: Patrick Euzen	: DECISION ON REQUEST FOR
Patent Number	: 7658836	: RECALCULATION of PATENT
Issue Date	: 02/09/2010	: TERM ADJUSTMENT IN VIEW
Appliction No	: 11/487,591	: OF WYETH AND NOTICE OF INTENT TO
Filed	: 07/17/2006	: ISSUE CERTIFICATE OF CORRECTION
		:

The Request for Recalculation is **GRANTED** to the extent indicated.

The patent term adjustment has been determined to be **369** days. The USPTO will *sua sponte* issue a certificate of correction reflecting the amount of PTA days determined by the recalculation.

Prior to the issuance of the certificate of correction, the USPTO will afford patentee an opportunity to be heard and request reconsideration. Accordingly, patentee has **one month or thirty (30) days**, whichever is longer, to file a request for reconsideration of this patent term adjustment calculation. See 35 U.S.C. 154(b)(3)(B)(ii) and 37 CFR 1.322(a)(4). No extensions of time will be granted under 37 CFR 1.136.

Patentee should use document code PET.OP if electronically filing a request for reconsideration of this patent term adjustment calculation. The patentee must also include the information required by 37 CFR 1.705(b)(2) and the fee required by 37 CFR 1.18(e). If patentee does not file a timely request for reconsideration of this patent term adjustment calculation including the information required by 37 CFR 1.705(b)(2) and the fee required by 37 CFR 1.18(e), the USPTO will issue a certificate of correction reflecting the PTA determination noted above.

Patentee should be aware that in order to preserve the right to review in the United States District Court for the District of Columbia of the USPTO patent term adjustment determination, patentee must ensure that he or she also take the steps required under 35 U.S.C. 154(b)(4)(A) in a timely manner. Nothing in the request for recalculation should be construed as providing an alternative time frame for commencing a civil action under 35 U.S.C. 154(b)(4)(A).

Any questions concerning this decision should be directed to the Office of Patent Legal Administration at 571-272-7702.

UNITED STATES PATENT AND TRADEMARK OFFICE

UNITED STATES DEPARTMENT OF COMMERCE
United States Patent and Trademark Office
Address: COMMISSIONER FOR PATENTS
P.O. Box 1450
Alexandria, Virginia 22313-1450
www.uspto.gov

HOWREY LLP
C/O IP DOCKETING DEPARTMENT
2941 FAIRVIEW PARK DRIVE, SUITE 200
FALLS CHURCH, VA 22042-2924

Mail Date: 04/21/2010

Applicant	: Huiyong Paul Chen	: DECISION ON REQUEST FOR
Patent Number	: 7616374	: RECALCULATION of PATENT
Issue Date	: 11/10/2009	: TERM ADJUSTMENT IN VIEW
Appliction No	: 11/487,596	: OF WYETH AND NOTICE OF INTENT TO
Filed	: 07/13/2006	: ISSUE CERTIFICATE OF CORRECTION
		:

The Request for Recalculation is **GRANTED** to the extent indicated.

The patent term adjustment has been determined to be **192** days. The USPTO will *sua sponte* issue a certificate of correction reflecting the amount of PTA days determined by the recalculation.

Prior to the issuance of the certificate of correction, the USPTO will afford patentee an opportunity to be heard and request reconsideration. Accordingly, patentee has **one month or thirty (30) days**, whichever is longer, to file a request for reconsideration of this patent term adjustment calculation. See 35 U.S.C. 154(b)(3)(B)(ii) and 37 CFR 1.322(a)(4). No extensions of time will be granted under 37 CFR 1.136.

Patentee should use document code PET.OP if electronically filing a request for reconsideration of this patent term adjustment calculation. The patentee must also include the information required by 37 CFR 1.705(b)(2) and the fee required by 37 CFR 1.18(e). If patentee does not file a timely request for reconsideration of this patent term adjustment calculation including the information required by 37 CFR 1.705(b)(2) and the fee required by 37 CFR 1.18(e), the USPTO will issue a certificate of correction reflecting the PTA determination noted above.

Patentee should be aware that in order to preserve the right to review in the United States District Court for the District of Columbia of the USPTO patent term adjustment determination, patentee must ensure that he or she also take the steps required under 35 U.S.C. 154(b)(4)(A) in a timely manner. Nothing in the request for recalculation should be construed as providing an alternative time frame for commencing a civil action under 35 U.S.C. 154(b)(4)(A).

Any questions concerning this decision should be directed to the Office of Patent Legal Administration at 571-272-7702.

UNITED STATES PATENT AND TRADEMARK OFFICE

Commissioner for Patents
United States Patent and Trademark Office
P.O. Box 1450
Alexandria, VA 22313-1450
www.uspto.gov

SIDLEY AUSTIN BROWN & WOOD LLP (LAIP GROUP)
555 W. FIFTH ST., SUITE 4000
LOS ANGELES CA 90013

COPY MAILED

JAN 11 2008

OFFICE OF PETITIONS

In re Application of
Alex Stenzler et al.
Application No. 11/487,600
Filed: July 13, 2006
Attorney Docket No.: **23086-81505**

ON PETITION

This is a decision on the petition filed January 3, 2008 to withdraw the holding of abandonment for the above-identified application which is being treated under 37 CFR 1.181.

The petition under 37 CFR 1.181 is **GRANTED**.

The application was held abandoned on July 12, 2007, for failure to timely submit a timely response to the non-Final Office Action mailed April 11, 2007, which set a three month period for reply. Accordingly, a Notice of Abandonment was mailed October 31, 2007.

Petitioner asserts that a response was filed with a three month extension of time and, in support, petitioner has submitted, *inter alia*, a copy of the response in the form of an amendment with a certificate of mail date of October 11, 2007 and a post card receipt date stamped October 15, 2007 by the USPTO.

The evidence submitted corroborates a timely response to the non-Final Office Action. Accordingly, the holding of abandonment is withdrawn and the Notice of Abandonment is vacated. No petition fee Is due and none has been charged.

This matter will be referred to Technology Center 3761 for appropriate action on the amendment filed October 15, 2007 (certificate of mail date October 11, 2007), a copy of which was submitted upon petition.

Telephone inquiries concerning this matter may be directed to the undersigned Petitions Attorney at (571) 272-3212.

Patricia Faison-Ball

Patricia Faison-Ball
Senior Petitions Attorney
Office of Petitions

UNITED STATES PATENT AND TRADEMARK OFFICE

UNITED STATES DEPARTMENT OF COMMERCE
United States Patent and Trademark Office
Address: COMMISSIONER FOR PATENTS
P.O. Box 1450
Alexandria, Virginia 22313-1450
www.uspto.gov

DENNEMEYER & COMPANY LTD.
REGENT HOUSE
HEATON LANE
STOCKPORT, CHESHIRE
ENGLAND SK4 1BB,
UNITED KINGDOM

Mail Date: 04/21/2010

Applicant	: Heiko Schirmer	: DECISION ON REQUEST FOR
Patent Number	: 7618957	: RECALCULATION of PATENT
Issue Date	: 11/17/2009	: TERM ADJUSTMENT IN VIEW
Appliction No	: 11/487,604	: OF WYETH AND NOTICE OF INTENT TO
Filed	: 07/17/2006	: ISSUE CERTIFICATE OF CORRECTION
		:

The Request for Recalculation is **GRANTED** to the extent indicated.

The patent term adjustment has been determined to be **315** days. The USPTO will *sua sponte* issue a certificate of correction reflecting the amount of PTA days determined by the recalculation.

Prior to the issuance of the certificate of correction, the USPTO will afford patentee an opportunity to be heard and request reconsideration. Accordingly, patentee has **one month or thirty (30) days**, whichever is longer, to file a request for reconsideration of this patent term adjustment calculation. See 35 U.S.C. 154(b)(3)(B)(ii) and 37 CFR 1.322(a)(4). No extensions of time will be granted under 37 CFR 1.136.

Patentee should use document code PET.OP if electronically filing a request for reconsideration of this patent term adjustment calculation. The patentee must also include the information required by 37 CFR 1.705(b)(2) and the fee required by 37 CFR 1.18(e). If patentee does not file a timely request for reconsideration of this patent term adjustment calculation including the information required by 37 CFR 1.705(b)(2) and the fee required by 37 CFR 1.18(e), the USPTO will issue a certificate of correction reflecting the PTA determination noted above.

Patentee should be aware that in order to preserve the right to review in the United States District Court for the District of Columbia of the USPTO patent term adjustment determination, patentee must ensure that he or she also take the steps required under 35 U.S.C. 154(b)(4)(A) in a timely manner. Nothing in the request for recalculation should be construed as providing an alternative time frame for commencing a civil action under 35 U.S.C. 154(b)(4)(A).

Any questions concerning this decision should be directed to the Office of Patent Legal Administration at 571-272-7702.

UNITED STATES PATENT AND TRADEMARK OFFICE

Commissioner for Patents
United States Patent and Trademark Office
P.O. Box 1450
Alexandria, VA 22313-1450
www.uspto.gov

MYERS BIGEL SIBLEY & SAJOVEC
PO BOX 37428
RALEIGH NC 27627

COPY MAILED

MAR 16 2009

OFFICE OF PETITIONS

In re Application of :
Hebrank et al. :
Application No. 11/487,614 : ON PETITION
Filed: July 17, 2006 :
Attorney Docket No. 5175-188 :

This is a decision on the petition under the unintentional provisions of 37 CFR 1.137(b), filed February 27, 2009, to revive the above-identified application.

The petition is **GRANTED**.

The application became abandoned for failure to timely file a reply within the meaning of 37 CFR 1.113 to the final Office action of July 25, 2008. The proposed reply required for consideration of a petition to revive must be a Notice of Appeal (and appeal fee required by 37 CFR 41.20(b)(2), an amendment that *prima facie* places the application in condition for allowance, a Request for Continued Examination and submission (37 CFR 1.114), or the filing of a continuing application under 37 CFR 1.53(b). See MPEP 711.03(c)(III)(A)(2). No extension of time pursuant to the provisions of 37 CFR 1.136(a) was obtained. Accordingly, the date of abandonment of this application is October 26, 2008.

The petition satisfies the requirements of 37 CFR 1.137(b) in that petitioner has supplied (1) the reply in the form of a Request for Continued Examination (RCE) and fee of $810.00, and the submission required by 37 CFR 1.114; (2) the petition fee of $1620; and (3) an adequate statement of unintentional delay.

It is noted that prosecution continued in this application before a petition decision was rendered to revive the application. This petition decision ratifies the prosecution of the application that occurred while the application was abandoned.

It is not apparent whether the person signing the statement of unintentional delay was in a position to have firsthand or direct knowledge of the facts and circumstances of the delay at issue. Nevertheless, such statement is being treated as having been made as the result of a reasonable inquiry into the facts and circumstances of such delay. See 37 CFR §10.18(b). In the event that such an inquiry has not been made, Petitioner must make such an inquiry. If such inquiry results in the discovery that it is not correct that the entire delay in filing the required

reply from the due date for the reply until the filing of a grantable petition pursuant to 37 CFR §1.137(b) was unintentional, petitioner must notify the Office.

There is no indication that the petition is signed by a registered patent attorney or patent agent of record. However, in accordance with 37 CFR 1.34, the signature of Mr. Donahue appearing on the correspondence shall constitute a representation to the United States Patent and Trademark Office that he is authorized to represent the particular party in whose behalf he acts. If, Mr. Donahue desires to receive correspondence regarding this file, the appropriate power of attorney documents must be submitted. A courtesy copy of this decision is being mailed to Mr. Donahue, the petitioner herein. However, until otherwise instructed, all future correspondence regarding this application file will be directed solely to the above-noted correspondence address of record.

Telephone inquiries concerning this decision should be directed to the undersigned at (571) 272-3215.

This application is being referred to Technology Center AU 2877 for appropriate action by the Examiner in the normal course of business.

Charlema Grant
Petitions Attorney
Office of Petitions

Cc: E. Victor Donahue
Pfizer, Inc.
Legal Department, 5th Floor
150 East 42nd Street
New York, NY 10017-5755

UNITED STATES PATENT AND TRADEMARK OFFICE

UNITED STATES DEPARTMENT OF COMMERCE
United States Patent and Trademark Office
Address: COMMISSIONER FOR PATENTS
P.O. Box 1450
Alexandria, Virginia 22313-1450
www.uspto.gov

BRINKS HOFER GILSON & LIONE
P.O. BOX 10395
CHICAGO, IL 60610

Mail Date: 04/21/2010

Applicant	: Takahito Maruyama	: DECISION ON REQUEST FOR
Patent Number	: 7594770	: RECALCULATION of PATENT
Issue Date	: 09/29/2009	: TERM ADJUSTMENT IN VIEW
Appliction No	: 11/487,616	: OF WYETH AND NOTICE OF INTENT TO
Filed	: 07/17/2006	: ISSUE CERTIFICATE OF CORRECTION
		:

The Request for Recalculation is **GRANTED** to the extent indicated.

The patent term adjustment has been determined to be **287** days. The USPTO will *sua sponte* issue a certificate of correction reflecting the amount of PTA days determined by the recalculation.

Prior to the issuance of the certificate of correction, the USPTO will afford patentee an opportunity to be heard and request reconsideration. Accordingly, patentee has **one month or thirty (30) days**, whichever is longer, to file a request for reconsideration of this patent term adjustment calculation. See 35 U.S.C. 154(b)(3)(B)(ii) and 37 CFR 1.322(a)(4). No extensions of time will be granted under 37 CFR 1.136.

Patentee should use document code PET.OP if electronically filing a request for reconsideration of this patent term adjustment calculation. The patentee must also include the information required by 37 CFR 1.705(b)(2) and the fee required by 37 CFR 1.18(e). If patentee does not file a timely request for reconsideration of this patent term adjustment calculation including the information required by 37 CFR 1.705(b)(2) and the fee required by 37 CFR 1.18(e), the USPTO will issue a certificate of correction reflecting the PTA determination noted above.

Patentee should be aware that in order to preserve the right to review in the United States District Court for the District of Columbia of the USPTO patent term adjustment determination, patentee must ensure that he or she also take the steps required under 35 U.S.C. 154(b)(4)(A) in a timely manner. Nothing in the request for recalculation should be construed as providing an alternative time frame for commencing a civil action under 35 U.S.C. 154(b)(4)(A).

Any questions concerning this decision should be directed to the Office of Patent Legal Administration at 571-272-7702.

UNITED STATES PATENT AND TRADEMARK OFFICE

COMMISSIONER FOR PATENTS
UNITED STATES PATENT AND TRADEMARK OFFICE
P.O. BOX 1450
ALEXANDRIA, VA 22313-1450
www.uspto.gov

MILDE & HOFFBERG, LLP
10 BANK STREET
SUITE 460
WHITE PLAINS, NY 10606

COPY MAILED

MAY 06 2008

OFFICE OF PETITIONS

In re Application of :
Arie Becker, et al. :
Application No. 11/487,626 : ON PETITION
Filed: July 17, 2006 :
Attorney Docket No. WOLFF 204-KFM :

This is a decision in response to the petition, filed December 26, 2007, to revive the above-identified application under the provisions of 37 CFR 1.137(b).

The petition is **GRANTED**.

The above-identified application became abandoned for failure to reply in a timely manner to the non-final Office action mailed August 17, 2007, which set a shortened statutory period for reply of one (1) month or thirty (30) days (whichever is later). This decision precedes the mailing of a Notice of Abandonment. On December 26, 2007 the present petition was filed.

The petition satisfies the requirements of 37 CFR 1.137(b) in that petitioner has supplied (1) the response in the form of an election of the invention to be examined; (2) the petition fee of $770; and (3) an adequate statement of unintentional delay.

An extension of time under 37 CFR 1.136 must be filed prior to the expiration of the maximum extendable period for reply. *See* In re Application of S., 8 USPQ2d 1630, 1631 (Comm'r Pats. 1988). Since the $525 extension of time fee submitted with the petition on December 26, 2007 was subsequent to the maximum extendable period for reply, this fee is unnecessary and will be credited to petitioner's deposit account.

The application is being referred to Technology Center AU 3732 for consideration of the response filed December 26, 2007.

Telephone inquiries concerning this decision may be directed to the undersigned at (571) 272-3204. All other inquiries regarding this application should be directed to the Technology Center.

Sherry D. Brinkley
Petitions Examiner
Office of Petitions

UNITED STATES PATENT AND TRADEMARK OFFICE

Commissioner for Patents
United States Patent and Trademark Office
P.O. Box 1450
Alexandria, VA 22313-1450
www.uspto.gov

SASTRY K. GANTI
1074 CROFTON LANE
BUFFALO GROVE IL 60089-4114

COPY MAILED

FEB 21 2007

OFFICE OF PETITIONS

In re Application of	:	
Ganti	:	
Application No. 11/487,628	:	DECISION ON PETITION
Filed: July 17, 2006	:	TO MAKE SPECIAL UNDER
Attorney Docket No. GANTI-PIWI	:	37 CFR 1.102(c)(2)
	:	

This is a decision on the petition under 37 CFR 1.102(c)(2)(i) & (ii), filed July 17, 2006, to make the above-identified application special based on the invention (a) materially enhancing the quality of the environment as set forth in M.P.E.P. § 708.02, Section V and (b) materially contributing to certain categories related to energy resource as set forth in M.P.E.P. § 708.02, Section VI.

The petitions are **DISMISSED**.

A grantable petition to make an application special under 37 CFR 1.102(c)(2)(i) and MPEP § 708.02, Section V: Environmental Quality, must state that special status is sought because the invention materially enhances the quality of the environment by contributing to the restoration or maintenance of basic life-sustaining natural elements. If the disclosure is not clear on its face that the claimed invention materially enhances the quality of the environment by contributing to the restoration or maintenance of one of the basic life-sustaining natural elements, the petition must be accompanied by a statement by the applicant, assignee, or an attorney/agent registered to practice before the Office explaining how the materiality standard is met. No fee is required.

The instant petition fails to show the invention meets the materiality standard. The instant invention is directed to lightweight handheld notebook size and wallet size electronic equipment. The handheld notebook size and wallet size electronic equipment claimed in the invention could be used to reduce paper usage does not in itself satisfy the materiality standard. The materiality standard does not permit the applicant to speculate as to how a hypothetical end-user might specially apply the invention in a manner that could materially enhance the quality of the environment by contributing to the restoration or maintenance of basic life-sustaining natural elements.

A grantable petition to make an application special under 37 CFR 1.102(c)(2)(ii) and MPEP § 708.02, Section VI: Energy, must state that special status is sought because the invention materially contributes to (A) the discovery or development of energy resources, or (B) the more efficient utilization and conservation of energy resources. Examples of inventions in category (A) would be developments in fossil fuels (natural gas, coal, and petroleum), hydrogen fuel technologies, nuclear energy, solar energy, etc. Category (B) would include inventions relating to the reduction of energy consumption in combustion systems, industrial equipment, household appliances, etc. If the application disclosure is not clear on its

face that the claimed invention materially contributes to category (A) or (B), the petition must be accompanied by a statement under 37 CFR 1.102 by the applicant, assignee, or an attorney/agent registered to practice before the Office explaining how the materiality standard is met. No fee is required.

The instant petition, fails to meet the materiality standard of 37 CFR 102(c)(2)(ii). Although the disclosure may be generally directed to lightweight handheld notebook size and wallet size electronic equipment, the materiality standard of the rule has not been met, i.e., petitioner has failed to state how the claimed invention contributes in a significant, substantial, or noticeable manner to inventions relating to the more efficient utilization and conservation of energy resources. The materiality standard does not permit the applicant to speculate as to how a hypothetical end-user might specially apply the invention in a manner that could materially contribute to category (A) or (B) as set forth above. Accordingly, it is unclear as to how the claimed invention would contribute in a significant manner to category (A) or (B).

This lack of meeting the materiality standards of 37 CFR 102(c)(2) (i) and (ii) does not permit the applicant to enjoy the benefit of advanced examination.

Further correspondence with respect to this matter should be addressed as follows:

By Mail: Mail Stop PETITION
Commissioner for Patents
P. O. Box 1450
Alexandria, VA 22313-1450

By hand: U. S. Patent and Trademark Office
Customer Service Window, Mail Stop Petitions
Randolph Building
401 Dulany Street
Alexandria, VA 22314

By FAX: (571) 273-8300

Telephone inquiries concerning this decision should be directed to Jefferey Harold at 571-272-7519, or to the undersigned at 571-272-7099.

All other inquiries concerning either the examination or status of the application should be directed to the Technology Center.

The application is being forwarded to the Technology Center Art Unit 2176 for action in its regular turn.

David Bucci
Petitions Examiner
Office of Petitions

UNITED STATES PATENT AND TRADEMARK OFFICE

UNITED STATES DEPARTMENT OF COMMERCE
United States Patent and Trademark Office
Address: COMMISSIONER FOR PATENTS
P.O. Box 1450
Alexandria, Virginia 22313-1450
www.uspto.gov

BRINKS HOFER GILSON & LIONE/INDY/COOK
BRINKS HOFER GILSON & LIONE
CAPITAL CENTER, SUITE 1100
201 NORTH ILLINOIS STREET
INDIANAPOLIS, IN 46204-4220

Mail Date: 04/21/2010

Applicant	: Brian C. Case	: DECISION ON REQUEST FOR
Patent Number	: 7658759	: RECALCULATION of PATENT
Issue Date	: 02/09/2010	: TERM ADJUSTMENT IN VIEW
Appliction No	: 11/487,629	: OF WYETH
Filed	: 07/17/2006	:
		:

The Patentee's Request for Recalculation is **DISMISSED.**

This Request is deemed ineligible for consideration for one or more of the following reasons:

(A). The patent for which PTA recalculation is requested is either a design or reissue application or is a reexamination proceeding;

(B). The patent for which PTA recalculation is requested resulted from a utility or plant application filed under 35 USC 111(a) before May 29, 2000 and no CPA filed in the application on/after May 29, 2000;

(C). The patent for which PTA recalculation is requested resulted from an international application in which the international filing date was before May 29, 2000 and no CPA filed in the application on/after May 29, 2000;

(D). The patent for which PTA recalculation is requested issued on/after March 2, 2010;

(E). The Request for Recalculation was filed more than 180 days after the grant date of the patent and the request was not filed within two months of a dismissal of a request for reconsideration of the of the patent term under 37 CFR 1.705(d);

(F). The Request for Recalculation is not solely limited to USPTO pre-Wyeth interpretation of 35 U.S.C. 154(b)(2)(A);

or

(G). A civil action was filed pursuant to 35 U.S.C. 154(b)(4)(A)concerning the same patent at issue in this request.

Patentee may file a reply to this decision dismissing the Request for Recalculation. Patentee must file such reply within one month or thirty days, whichever is longer, of the mail date of the decision dismissing the Request for Recalculation. No fee is required if patentee is asserting in the reply that the dismissal for ineligibility is improper.

Patentee should use document code PET.OP if electronically filing a reply to this dismissal. If the USPTO finds that the request was improperly deemed ineligible, the USPTO will mail applicant a recalculation determination.

Patentee should be aware that in order to preserve the right to review in the United States District Court for the District of Columbia of the USPTO patent term adjustment determination, patentee must ensure that he or she also take the steps required under 35 U.S.C. 154(b)(4)(A). Nothing in the request for recalculation should be construed as providing an alternative time frame for commencing a civil action under 35 U.S.C. 154 (b)(4)(A).

Any questions concerning this decision should be directed to the Office of Patent Legal Administration at 571-272-7702.

UNITED STATES PATENT AND TRADEMARK OFFICE

UNITED STATES DEPARTMENT OF COMMERCE
United States Patent and Trademark Office
Address: COMMISSIONER FOR PATENTS
P.O. Box 1450
Alexandria, Virginia 22313-1450
www.uspto.gov

SALIWANCHIK LLOYD & SALIWANCHIK
A PROFESSIONAL ASSOCIATION
PO Box 142950
GAINESVILLE, FL 32614

Mail Date: 04/20/2010

Applicant	: Jeff Lloyd	: DECISION ON REQUEST FOR
Patent Number	: 7581912	: RECALCULATION of PATENT
Issue Date	: 09/01/2009	: TERM ADJUSTMENT IN VIEW
Appliction No	: 11/487,640	: OF WYETH AND NOTICE OF INTENT TO
Filed	: 07/17/2006	: ISSUE CERTIFICATE OF CORRECTION
		:

The Request for Recalculation is **GRANTED** to the extent indicated.

The patent term adjustment has been determined to be **475** days. The USPTO will *sua sponte* issue a certificate of correction reflecting the amount of PTA days determined by the recalculation.

Prior to the issuance of the certificate of correction, the USPTO will afford patentee an opportunity to be heard and request reconsideration. Accordingly, patentee has **one month or thirty (30) days**, whichever is longer, to file a request for reconsideration of this patent term adjustment calculation. See 35 U.S.C. 154(b)(3)(B)(ii) and 37 CFR 1.322(a)(4). No extensions of time will be granted under 37 CFR 1.136.

Patentee should use document code PET.OP if electronically filing a request for reconsideration of this patent term adjustment calculation. The patentee must also include the information required by 37 CFR 1.705(b)(2) and the fee required by 37 CFR 1.18(e). If patentee does not file a timely request for reconsideration of this patent term adjustment calculation including the information required by 37 CFR 1.705(b)(2) and the fee required by 37 CFR 1.18(e), the USPTO will issue a certificate of correction reflecting the PTA determination noted above.

Patentee should be aware that in order to preserve the right to review in the United States District Court for the District of Columbia of the USPTO patent term adjustment determination, patentee must ensure that he or she also take the steps required under 35 U.S.C. 154(b)(4)(A) in a timely manner. Nothing in the request for recalculation should be construed as providing an alternative time frame for commencing a civil action under 35 U.S.C. 154(b)(4)(A).

Any questions concerning this decision should be directed to the Office of Patent Legal Administration at 571-272-7702.

UNITED STATES PATENT AND TRADEMARK OFFICE

Commissioner for Patents
United States Patent and Trademark Office
P.O. Box 1450
Alexandria, VA 22313-1450
www.uspto.gov

LATTICE SEMICONDUCTOR
CORPORATION
5555 NE MOORE COURT
HILLSBORO OR 97124-6421

COPY MAILED

MAR 13 2009

OFFICE OF PETITIONS

In re Application of :
McLaury, et al. :
Application No. 11/487,647 : DECISION
Filed/Deposited: 17 July, 2006 :
Attorney Docket No. **M-16535 US** :

This is a decision on the petition filed on 23 January, 2009, considered as a petition under 37 C.F.R. §1.181 (no fee) requesting withdrawal of the holding of abandonment in the above-identified application.

It is noted that the address on the petition is different than that of record.

If Petitioner desires to receive future correspondence regarding this application, the appropriate Notice must be submitted.

A courtesy copy of this decision will be mailed to Petitioner.

However, all future correspondence will be directed to the address of record until such time as appropriate instructions are received to the contrary.

The petition under 37 C.F.R. §1.181 is **DISMISSED**.

This is **not** a final agency action within the meaning of 5 U.S.C. §704.

Any further petition to revive must be submitted within TWO (2) MONTHS from the mail date of this decision. Extensions of time under 37 C.F.R. §1.136(a) are permitted. The reconsideration request should include a cover letter entitled "Renewed Petition under 37 C.F.R. §1.181 to Withdraw the Holding of Abandonment."

In the alternative, Petitioner may properly file a petition to the Commissioner under 37 C.F.R. §1.137(b) requesting revival of an application abandoned due to unintentional delay.

As to the Request to Withdraw
the Holding of Abandonment

Petitioner's attention is directed to the Commentary at MPEP §711.03(c)(I) for guidance as to the proper showing and timeliness requirements for relief under 37 C.F.R. §1.181.

Petitioner appears not to satisfy the showing requirements set forth in the guidance in the Commentary at MPEP §711.03(c)(I).

For reference: Petitioners' attentions are directed to the guidance set forth in the Commentary at MPEP §711.03(c)(I)—and with particularity to the requirements therein including statements of non-receipt at the address of record, search and non-discovery, with a description of docketing system and a statement of its reliability, and support for those the statements with copies of the docket record/file jacket cover and due date calendar/docket. (Further, the regulations at 37 C.F.R. §1.181 require that a Petitioner seek relief thereunder within two (2) months of the act complained of.)

BACKGROUND

The record reflects as follows:

Petitioner failed to reply timely and properly to the Notice of Allowance/Allowability and Fees Due (copy enclosed) mailed on 26 June, 2008, with reply due under a non-extendable deadline on or before 26 September, 2008.

The application went abandoned by operation of law after midnight 26 September, 2008.

The Office mailed a Notice of Abandonment on 20 October, 2008.

On 23 January, 2009, Petitioner filed, *inter alia*, a petition pursuant to 37 C.F.R. §1.181 seeking withdrawal of the holding of abandonment and indicating the basis of the averment as non-receipt of the Notice. Petitioner also included therewith no supporting documentation, but only the argument that the Petitioner had Noticed the Office as to a change of address on 29 September, 2006, and the Office apparently never had incorporated that change into its records. Petitioner is correct that a paper was filed—however, Petitioner never Noticed the Office. The facts are these:

- The correspondence address of record (obtained by the Office from the Transmittal Cover Sheet) on filing of the application on 17 July, 2006, was: MacPherson Kwok Chen & Heid LLP, 1762 Technology Drive/Ste. 226, San Jose, CA 95110;

- On 7 August, 2006, the Office mailed to the correspondence address of record (MacPherson Kwok Chen & Heid LLP, 1762 Technology Drive/Ste. 226, San Jose, CA 95110) a Notice of Missing Parts (*inter alia*, oath/declaration);

- On 29 September, 2006, a reply in the form of, *inter alia*, and oath/declaration was filed of record—while review of the paper now reveals that a Customer Number (32605) is listed within (at page two of) the oath/declaration, *there was no Notice of Change of Address included at that time or filed thereafter to call attention to the intent to change the correspondence address of record*;

- moreover, at this writing, Customer Number 32605 continues to be associated with Alan MacPherson, of MacPherson Kwok Chen & Heid LLP, though at a different San Jose, CA, address (the address now set forth on the petition);

- The Office mailed the 26 June, 2008, Notice of Allowance/Allowability and Fees Due to the then-address of record, to wit: MacPherson Kwok Chen & Heid LLP, 1762 Technology Drive/Ste. 226, San Jose, CA 95110.

The following are noted:

- The oath/declaration filed on 29 September, 2006 does not Notice the Office or otherwise call attention to the fact that a change of address is being made;

- No Notice of Change of Address was filed as to the instant application before the Office mailed the Notice of Allowance/Allowability and Fees Due on 26 June, 2008;

- The current Customer Number of record (for Lattice Semiconductor Corporation) is 29416 and no Notice of Change of Address associated with that Customer Number was filed before the Office mailed the Notice of Allowance/Allowability and Fees Due on 26 June, 2008.

The guidance in the Commentary at MPEP §601.03 provides in pertinent part:

> ***
>
> 37 C.F.R. §1.33(a) provides that the application must specify a correspondence address to which the Office will send notice, letters, and other communications relating to an application. The correspondence address must either be in an application data sheet (37 C.F.R. §1.76) or in a clearly identifiable manner elsewhere in any papers submitted with the application filing.
>
> ***
>
> *Where a correspondence address has been established on filing of the application or changed pursuant to 37 C.F.R. §1.33(a)(1) (prior to the filing of an executed oath or declaration under 37 C.F.R. §1.63 by any of the inventors), that correspondence address*

remains in effect upon filing of an executed oath or declaration under 37 C.F.R. §1.63 and can only be subsequently changed pursuant to 37 C.F.R. §1.33(a)(2).

***

The required notification of change of correspondence address need take no particular form. *However, it should be provided in a manner calling attention to the fact that a change of address is being made. Thus, the mere inclusion, in a paper being filed for another purpose, of an address which is different from the previously provided correspondence address, without mention of the fact that an address change is being made would not ordinarily be recognized or deemed as instructions to change the correspondence address on the file record.* (Emphasis supplied.)

***

Petitioner's attention is directed to the guidance in the Commentary at MPEP §711.03(c)(I)) generally to satisfy the mandated showings pursuant to 37 C.F.R. §1.181:

***

The showing required to establish nonreceipt of an Office communication must include a statement from the practitioner describing the system used for recording an Office action received at the correspondence address of record with the USPTO. The statement should establish that the docketing system is sufficiently reliable. It is expected that the record would include, but not be limited to, the application number, attorney docket number, the mail date of the Office action and the due date for the response.

Practitioner must state that the Office action was not received at the correspondence address of record, and that a search of the practitioner's record(s), including any file jacket or the equivalent, and the application contents, indicates that the Office action was not received. A copy of the record(s) used by the practitioner where the non-received Office action would have been entered had it been received is required.

A copy of the practitioner's record(s) required to show non-receipt of the Office action should include the master docket for the firm. That is, if a three month period for reply was set in the nonreceived Office action, a copy of the master docket report showing all replies docketed for a date three months from the mail date of the nonreceived Office action must be submitted as documentary proof of nonreceipt of the Office action. If no such master docket exists, the practitioner should so state and provide other evidence such as, but not limited to, the following: the application file jacket; incoming mail log; calendar; reminder system; or the individual docket record for the application in question.[1]

***

[1] *See*: MPEP §711.03(c) (I)(A).

Thus, as indicated earlier in this decision (see the italicized discussion immediately before the BACKGROUND and with more particularity the excerpts from the MPEP, above), the guidance in the Commentary at MPEP §711.03(c)(I)) sets forth a particular set of statements (e.g., docketing system sufficiently reliable) and documents (e.g., due-date calendar/due-date docket for the firm) that must be provided by Petitioner to satisfy the mandated showings pursuant to 37 C.F.R. §1.181.

This Petitioner has failed to do—and apparently cannot do.

Out of an abundance of caution, Petitioners always are reminded that the filing of a petition under 37 C.F.R. §1.181 does not toll any periods that may be running any action by the Office and a petition seeking relief under the regulation must be filed within two (2) months of the act complained of (*see*: 37 C.F.R. §1.181(f)), and those registered to practice and all others who make representations before the Office **must** inquire into the underlying facts of representations made to the Office and support averments with the appropriate documentation–since all owe to the Office the continuing duty to disclose.[2]

The availability of applications and application papers online to applicants/practitioners who diligently associate their Customer Number with the respective application(s) now provides an applicant/practitioner on-demand information as to events/transactions in an application.

STATUTES, REGULATIONS

Congress has authorized the Commissioner to "revive an application if the delay is shown to the satisfaction of the Commissioner to have been "unavoidable." 35 U.S.C. §133 (1994).

Allegations as to the Request to Withdraw the Holding of Abandonment

The guidance in the Commentary at MPEP §711.03(c)(I) specifies the showing required and how it is to be made and supported.

Petitioner appears not to have made the showing required.

---

[2] See supplement of 17 June, 1999. The Patent and Trademark Office is relying on Petitioner's duty of candor and good faith and accepting a statement made by Petitioner. See Changes to Patent Practice and Procedure, 62 Fed. Reg. at 53160 and 53178, 1203 Off. Gaz. Pat. Office at 88 and 103 (responses to comments 64 and 109)(applicant obligated under 37 C.F.R. §10.18 to inquire into the underlying facts and circumstances when providing statements to the Patent and Trademark Office).

CONCLUSION

Accordingly, the petition under 37 C.F.R. §1.181 is **dismissed**.

ALTERNATIVE VENUE

Should Petitioner wish to revive the application, Petitioner may wish to properly file a petition to the Commissioner requesting revival of an application abandoned due to unintentional delay under 37 C.F.R. §1.137(b). (See: http://www.uspto.gov/web/offices/pac/mpep/documents/0700_711_03_c.htm#sect711.03c)

A petition to revive on the grounds of unintentional delay must be filed promptly and such petition must be accompanied by the reply, the petition fee, a statement that "the entire delay in filing the required reply from the due date for the reply until the filing of a grantable petition was unintentional," and a terminal disclaimer and fee where appropriate. (The statement is in the form available online.)

Further correspondence with respect to this matter should be addressed as follows:

By Mail:
Mail Stop PETITION
Commissioner for Patents
P. O. Box 1450
Alexandria, VA 22313-1450

By hand:
U. S. Patent and Trademark Office
Customer Service Window, Mail Stop Petitions
Randolph Building
401 Dulany Street
Alexandria, VA 22314

By facsimile:
(571) 273-8300
Attn: Office of Petitions

Telephone inquiries regarding this decision may be directed to the undersigned at (571) 272-3214—it is noted, however, that all practice before the Office is in writing (see: 37 C.F.R. §1.2[3]) and the proper authority for action on any matter in this regard are the statutes (35 U.S.C.), regulations (37 C.F.R.) and the commentary on policy (MPEP). Therefore, no telephone discussion may be controlling or considered authority for Petitioner's action(s).

/John J. Gillon, Jr./
John J. Gillon, Jr.
Senior Attorney
Office of Petitions

cc
MACPHERSON, KWOK,
CHEN AND HEID, LLP
2033 GATEWAY PLACE
SUITE 400
SAN JOSE, CA 95110

[3] The regulations at 37 C.F.R. §1.2 provide:
§1.2 Business to be transacted in writing.
All business with the Patent and Trademark Office should be transacted in writing. The personal attendance of applicants or their attorneys or agents at the Patent and Trademark Office is unnecessary. The action of the Patent and Trademark Office will be based exclusively on the written record in the Office. No attention will be paid to any alleged oral promise, stipulation, or understanding in relation to which there is disagreement or doubt.

UNITED STATES PATENT AND TRADEMARK OFFICE

UNITED STATES DEPARTMENT OF COMMERCE
United States Patent and Trademark Office
Address: COMMISSIONER FOR PATENTS
P.O. Box 1450
Alexandria, Virginia 22313-1450
www.uspto.gov

NOTICE OF ALLOWANCE AND FEE(S) DUE

7590 06/26/2008

MacPherson, Kwok Chen & Heid LLP
Suite 226
1762 Technology Drive
San Jose, CA 95110

EXAMINER	
PHUNG, ANH K	
ART UNIT	PAPER NUMBER
2824	

DATE MAILED: 06/26/2008

APPLICATION NO.	FILING DATE	FIRST NAMED INVENTOR	ATTORNEY DOCKET NO.	CONFIRMATION NO.
11/487,647	07/17/2006	Loren McLaury	M-16535 US	6459

TITLE OF INVENTION: FLASH MEMORY ARRAY WITH INDEPENDENTLY ERASABLE SECTORS

APPLN. TYPE	SMALL ENTITY	ISSUE FEE DUE	PUBLICATION FEE DUE	PREV. PAID ISSUE FEE	TOTAL FEE(S) DUE	DATE DUE
nonprovisional	NO	$1440	$0	$0	$1440	09/26/2008

THE APPLICATION IDENTIFIED ABOVE HAS BEEN EXAMINED AND IS ALLOWED FOR ISSUANCE AS A PATENT. PROSECUTION ON THE MERITS IS CLOSED. THIS NOTICE OF ALLOWANCE IS NOT A GRANT OF PATENT RIGHTS. THIS APPLICATION IS SUBJECT TO WITHDRAWAL FROM ISSUE AT THE INITIATIVE OF THE OFFICE OR UPON PETITION BY THE APPLICANT. SEE 37 CFR 1.313 AND MPEP 1308.

THE ISSUE FEE AND PUBLICATION FEE (IF REQUIRED) MUST BE PAID WITHIN THREE MONTHS FROM THE MAILING DATE OF THIS NOTICE OR THIS APPLICATION SHALL BE REGARDED AS ABANDONED. THIS STATUTORY PERIOD CANNOT BE EXTENDED. SEE 35 U.S.C. 151. THE ISSUE FEE DUE INDICATED ABOVE DOES NOT REFLECT A CREDIT FOR ANY PREVIOUSLY PAID ISSUE FEE IN THIS APPLICATION. IF AN ISSUE FEE HAS PREVIOUSLY BEEN PAID IN THIS APPLICATION (AS SHOWN ABOVE), THE RETURN OF PART B OF THIS FORM WILL BE CONSIDERED A REQUEST TO REAPPLY THE PREVIOUSLY PAID ISSUE FEE TOWARD THE ISSUE FEE NOW DUE.

HOW TO REPLY TO THIS NOTICE:

I. Review the SMALL ENTITY status shown above.

If the SMALL ENTITY is shown as YES, verify your current SMALL ENTITY status:

A. If the status is the same, pay the TOTAL FEE(S) DUE shown above.

B. If the status above is to be removed, check box 5b on Part B - Fee(s) Transmittal and pay the PUBLICATION FEE (if required) and twice the amount of the ISSUE FEE shown above, or

If the SMALL ENTITY is shown as NO:

A. Pay TOTAL FEE(S) DUE shown above, or

B. If applicant claimed SMALL ENTITY status before, or is now claiming SMALL ENTITY status, check box 5a on Part B - Fee(s) Transmittal and pay the PUBLICATION FEE (if required) and 1/2 the ISSUE FEE shown above.

II. PART B - FEE(S) TRANSMITTAL, or its equivalent, must be completed and returned to the United States Patent and Trademark Office (USPTO) with your ISSUE FEE and PUBLICATION FEE (if required). If you are charging the fee(s) to your deposit account, section "4b" of Part B - Fee(s) Transmittal should be completed and an extra copy of the form should be submitted. If an equivalent of Part B is filed, a request to reapply a previously paid issue fee must be clearly made, and delays in processing may occur due to the difficulty in recognizing the paper as an equivalent of Part B.

III. All communications regarding this application must give the application number. Please direct all communications prior to issuance to Mail Stop ISSUE FEE unless advised to the contrary.

IMPORTANT REMINDER: Utility patents issuing on applications filed on or after Dec. 12, 1980 may require payment of maintenance fees. It is patentee's responsibility to ensure timely payment of maintenance fees when due.

PTOL-85 (Rev. 08/07) Approved for use through 08/31/2010.

PART B - FEE(S) TRANSMITTAL

Complete and send this form, together with applicable fee(s), to: Mail **Mail Stop ISSUE FEE**
Commissioner for Patents
P.O. Box 1450
Alexandria, Virginia 22313-1450
or Fax (571)-273-2885

INSTRUCTIONS: This form should be used for transmitting the ISSUE FEE and PUBLICATION FEE (if required). Blocks 1 through 5 should be completed where appropriate. All further correspondence including the Patent, advance orders and notification of maintenance fees will be mailed to the current correspondence address as indicated unless corrected below or directed otherwise in Block 1, by (a) specifying a new correspondence address; and/or (b) indicating a separate "FEE ADDRESS" for maintenance fee notifications.

CURRENT CORRESPONDENCE ADDRESS (Note: Use Block 1 for any change of address)

7590 06/26/2008

MacPherson, Kwok Chen & Heid LLP
Suite 226
1762 Technology Drive
San Jose, CA 95110

Note: A certificate of mailing can only be used for domestic mailings of the Fee(s) Transmittal. This certificate cannot be used for any other accompanying papers. Each additional paper, such as an assignment or formal drawing, must have its own certificate of mailing or transmission.

Certificate of Mailing or Transmission
I hereby certify that this Fee(s) Transmittal is being deposited with the United States Postal Service with sufficient postage for first class mail in an envelope addressed to the Mail Stop ISSUE FEE address above, or being facsimile transmitted to the USPTO (571) 273-2885, on the date indicated below.

(Depositor's name)
(Signature)
(Date)

APPLICATION NO.	FILING DATE	FIRST NAMED INVENTOR	ATTORNEY DOCKET NO.	CONFIRMATION NO.
11/487,647	07/17/2006	Loren McLaury	M-16535 US	6459

TITLE OF INVENTION: FLASH MEMORY ARRAY WITH INDEPENDENTLY ERASABLE SECTORS

APPLN. TYPE	SMALL ENTITY	ISSUE FEE DUE	PUBLICATION FEE DUE	PREV. PAID ISSUE FEE	TOTAL FEE(S) DUE	DATE DUE
nonprovisional	NO	$1440	$0	$0	$1440	09/26/2008

EXAMINER	ART UNIT	CLASS-SUBCLASS
PHUNG, ANH K	2824	365-185110

1. Change of correspondence address or indication of "Fee Address" (37 CFR 1.363).
- ☐ Change of correspondence address (or Change of Correspondence Address form PTO/SB/122) attached.
- ☐ "Fee Address" indication (or "Fee Address" Indication form PTO/SB/47; Rev 03-02 or more recent) attached. **Use of a Customer Number is required.**

2. For printing on the patent front page, list
(1) the names of up to 3 registered patent attorneys or agents OR, alternatively,
(2) the name of a single firm (having as a member a registered attorney or agent) and the names of up to 2 registered patent attorneys or agents. If no name is listed, no name will be printed.
1 _____
2 _____
3 _____

3. ASSIGNEE NAME AND RESIDENCE DATA TO BE PRINTED ON THE PATENT (print or type)

PLEASE NOTE: Unless an assignee is identified below, no assignee data will appear on the patent. If an assignee is identified below, the document has been filed for recordation as set forth in 37 CFR 3.11. Completion of this form is NOT a substitute for filing an assignment.

(A) NAME OF ASSIGNEE (B) RESIDENCE: (CITY and STATE OR COUNTRY)

Please check the appropriate assignee category or categories (will not be printed on the patent): ☐ Individual ☐ Corporation or other private group entity ☐ Government

4a. The following fee(s) are submitted:
- ☐ Issue Fee
- ☐ Publication Fee (No small entity discount permitted)
- ☐ Advance Order - # of Copies _____

4b. Payment of Fee(s): **(Please first reapply any previously paid issue fee shown above)**
- ☐ A check is enclosed.
- ☐ Payment by credit card. Form PTO-2038 is attached.
- ☐ The Director is hereby authorized to charge the required fee(s), any deficiency, or credit any overpayment, to Deposit Account Number _____ (enclose an extra copy of this form).

5. **Change in Entity Status** (from status indicated above)
- ☐ a. Applicant claims SMALL ENTITY status. See 37 CFR 1.27.
- ☐ b. Applicant is no longer claiming SMALL ENTITY status. See 37 CFR 1.27(g)(2).

NOTE: The Issue Fee and Publication Fee (if required) will not be accepted from anyone other than the applicant; a registered attorney or agent; or the assignee or other party in interest as shown by the records of the United States Patent and Trademark Office.

Authorized Signature _____ Date _____

Typed or printed name _____ Registration No. _____

This collection of information is required by 37 CFR 1.311. The information is required to obtain or retain a benefit by the public which is to file (and by the USPTO to process) an application. Confidentiality is governed by 35 U.S.C. 122 and 37 CFR 1.14. This collection is estimated to take 12 minutes to complete, including gathering, preparing, and submitting the completed application form to the USPTO. Time will vary depending upon the individual case. Any comments on the amount of time you require to complete this form and/or suggestions for reducing this burden, should be sent to the Chief Information Officer, U.S. Patent and Trademark Office, U.S. Department of Commerce, P.O. Box 1450, Alexandria, Virginia 22313-1450. DO NOT SEND FEES OR COMPLETED FORMS TO THIS ADDRESS. SEND TO: Commissioner for Patents, P.O. Box 1450, Alexandria, Virginia 22313-1450.

Under the Paperwork Reduction Act of 1995, no persons are required to respond to a collection of information unless it displays a valid OMB control number.

UNITED STATES PATENT AND TRADEMARK OFFICE

UNITED STATES DEPARTMENT OF COMMERCE
United States Patent and Trademark Office
Address: COMMISSIONER FOR PATENTS
P.O. Box 1450
Alexandria, Virginia 22313-1450
www.uspto.gov

APPLICATION NO.	FILING DATE	FIRST NAMED INVENTOR	ATTORNEY DOCKET NO.	CONFIRMATION NO.
11/487,647	07/17/2006	Loren McLaury	M-16535 US	6459

7590 06/26/2008

MacPherson, Kwok Chen & Heid LLP
Suite 226
1762 Technology Drive
San Jose, CA 95110

EXAMINER	
PHUNG, ANH K	
ART UNIT	PAPER NUMBER
2824	

DATE MAILED: 06/26/2008

Determination of Patent Term Adjustment under 35 U.S.C. 154 (b)

(application filed on or after May 29, 2000)

The Patent Term Adjustment to date is 283 day(s). If the issue fee is paid on the date that is three months after the mailing date of this notice and the patent issues on the Tuesday before the date that is 28 weeks (six and a half months) after the mailing date of this notice, the Patent Term Adjustment will be 283 day(s).

If a Continued Prosecution Application (CPA) was filed in the above-identified application, the filing date that determines Patent Term Adjustment is the filing date of the most recent CPA.

Applicant will be able to obtain more detailed information by accessing the Patent Application Information Retrieval (PAIR) WEB site (http://pair.uspto.gov).

Any questions regarding the Patent Term Extension or Adjustment determination should be directed to the Office of Patent Legal Administration at (571)-272-7702. Questions relating to issue and publication fee payments should be directed to the Customer Service Center of the Office of Patent Publication at 1-(888)-786-0101 or (571)-272-4200.

PTOL-85 (Rev. 08/07) Approved for use through 08/31/2010.

Notice of Allowability	Application No.	Applicant(s)	
	11/487,647	MCLAURY ET AL.	
	Examiner	Art Unit	
	ANDY PHUNG	2824	

-- The MAILING DATE of this communication appears on the cover sheet with the correspondence address--

All claims being allowable, PROSECUTION ON THE MERITS IS (OR REMAINS) CLOSED in this application. If not included herewith (or previously mailed), a Notice of Allowance (PTOL-85) or other appropriate communication will be mailed in due course. **THIS NOTICE OF ALLOWABILITY IS NOT A GRANT OF PATENT RIGHTS.** This application is subject to withdrawal from issue at the initiative of the Office or upon petition by the applicant. See 37 CFR 1.313 and MPEP 1308.

1. ☒ This communication is responsive to *the present application filed on July 17, 2006*.

2. ☒ The allowed claim(s) is/are *1-20*.

3. ☐ Acknowledgment is made of a claim for foreign priority under 35 U.S.C. § 119(a)-(d) or (f).
   a) ☐ All b) ☐ Some* c) ☐ None of the:
      1. ☐ Certified copies of the priority documents have been received.
      2. ☐ Certified copies of the priority documents have been received in Application No. _____ .
      3. ☐ Copies of the certified copies of the priority documents have been received in this national stage application from the International Bureau (PCT Rule 17.2(a)).

   * Certified copies not received: _____.

Applicant has THREE MONTHS FROM THE "MAILING DATE" of this communication to file a reply complying with the requirements noted below. Failure to timely comply will result in ABANDONMENT of this application.
THIS THREE-MONTH PERIOD IS NOT EXTENDABLE.

4. ☐ A SUBSTITUTE OATH OR DECLARATION must be submitted. Note the attached EXAMINER'S AMENDMENT or NOTICE OF INFORMAL PATENT APPLICATION (PTO-152) which gives reason(s) why the oath or declaration is deficient.

5. ☐ CORRECTED DRAWINGS (as "replacement sheets") must be submitted.
   (a) ☐ including changes required by the Notice of Draftsperson's Patent Drawing Review (PTO-948) attached
      1) ☐ hereto or 2) ☐ to Paper No./Mail Date _____.
   (b) ☐ including changes required by the attached Examiner's Amendment / Comment or in the Office action of Paper No./Mail Date _____.

   Identifying indicia such as the application number (see 37 CFR 1.84(c)) should be written on the drawings in the front (not the back) of each sheet. Replacement sheet(s) should be labeled as such in the header according to 37 CFR 1.121(d).

6. ☐ DEPOSIT OF and/or INFORMATION about the deposit of BIOLOGICAL MATERIAL must be submitted. Note the attached Examiner's comment regarding REQUIREMENT FOR THE DEPOSIT OF BIOLOGICAL MATERIAL.

Attachment(s)

1. ☒ Notice of References Cited (PTO-892)
2. ☐ Notice of Draftperson's Patent Drawing Review (PTO-948)
3. ☒ Information Disclosure Statements (PTO/SB/08), Paper No./Mail Date 7/17/06, 7/26/06
4. ☐ Examiner's Comment Regarding Requirement for Deposit of Biological Material
5. ☐ Notice of Informal Patent Application
6. ☐ Interview Summary (PTO-413), Paper No./Mail Date _____ .
7. ☐ Examiner's Amendment/Comment
8. ☒ Examiner's Statement of Reasons for Allowance
9. ☐ Other _____.

/ANH PHUNG/
Primary Examiner, Art Unit 2824
June 16, 2008

DETAILED ACTION

1. This Office Action is responsive to the U.S. Patent Application Ser. No. 11/487,647 filed on July 17, 2006, claims **1-20** are pending in the application.

Information Disclosure Statement

2. This office acknowledges receipt of the following items from the Applicant:

Information Disclosure Statements (IDS) filed on 7/17/2006 and 7/26/2006.

Information disclosed and listed on PTO 1449(s) have been considered.

Examiner's Statement of Reasons for Allowance

3. Claims **1-20** are allowed.

Pascucci (US 6,930,927), Chevalier (US 6,574,148), Ogura et al. (US 6,535,430) and Ohtsuka (US 5,289,053) disclose a flash memory device having a row decoder circuit similar to that of the present application, but fail to teach:

"a first set of word lines connected with control gates of the flash memory cells of the first subarray; a first set of row drivers connected with the first set of word lines and adapted to selectively tri-state the first set of word lines or drive the first set of word lines with a first voltage; a second set of word lines connected with control gates of the flash memory cells of the second subarray; a second set of row drivers connected with the second set of word lines and adapted to selectively tri-state the second set of word lines or drive the second set of word lines with the first voltage" as claimed in the independent claim 1; also, dependent claims 2-10 are therefore allowed because of their dependency on claim 1; or

"driving a first set of word lines with a first voltage, wherein the first set of word lines are connected with control gates of the flash memory cells of the first subarray; providing a second voltage to a plurality of erase voltage taps connected with the first and second subarrays; and tri-stating a second set of word lines, wherein the second set of word lines are connected with control gates of the flash memory cells of the second subarray, wherein the flash memory cells of the first subarray but not the second subarray are erased in response to the first and second voltages" as claimed in the independent claim 11; also, dependent claims 12-17 are therefore allowed because of their dependency on claim 11; or

"a first set of word lines connected with control gates of the flash memory cells of the first subarray; a second set of word lines connected with control gates of the flash memory cells of the second subarray; means for selectively tri-stating the first set of word lines or driving the first set of word lines with a first voltage; means for selectively tri-stating the second set of word lines or driving the second set of word lines with a first voltage" as claimed in the independent claim 18; also, dependent claims 19 and 20 are therefore allowed because of their dependency on claim 18.

Any comments considered necessary by applicants must be submitted no later than the payment of the issue fee and, to avoid processing delays, should preferably accompany the issue fee. Such submissions should be clearly labeled "Comment on Statement of Reasons for Allowance".

Conclusion

4. Any inquiry concerning this communication or earlier communications from the examiner should be directed to **ANH PHUNG** whose telephone number is **(571) 272-1883**. The examiner can normally be reached on Monday-Friday from 8:00 AM to 4:30 PM.

If attempts to reach the examiner by telephone are unsuccessful, the examiner's supervisor, **RICHARD ELMS**, can be reached on **(571) 272-1869**. The fax phone number for the organization where this application or proceeding is assigned is **(571) 273-8300**.

Information regarding the status of an application may be obtained from the Patent Application Information Retrieval (PAIR) system. Status information for published applications may be obtained from either Private PAIR or Public PAIR. Status information for unpublished applications is available through Private PAIR only. For more information about the PAIR system, see http://pair-direct.uspto.gov. Should you have questions on access to the Private PAIR system, contact the Electronic Business Center (EBC) at 866-217-9197 (toll-free). If you would like assistance from a USPTO Customer Service Representative or access to the automated information system, call 800-786-9199 (IN USA OR CANADA) or 571-272-1000., contact the Electronic Business Center (EBC) at **866-217-9197** (toll-free).

/ANH PHUNG/

Primary Examiner, Art Unit 2824

June 16, 2008

Notice of References Cited	Application/Control No. 11/487,647	Applicant(s)/Patent Under Reexamination MCLAURY ET AL.	
	Examiner ANDY PHUNG	Art Unit 2824	Page 1 of 1

U.S. PATENT DOCUMENTS

*		Document Number Country Code-Number-Kind Code	Date MM-YYYY	Name	Classification
*	A	US-6,930,927	08-2005	Pascucci, Luigi	365/185.29
*	B	US-6,574,148	06-2003	Chevallier, Christophe	365/185.23
*	C	US-6,535,430	03-2003	Ogura et al.	365/185.23
*	D	US-5,289,053	02-1994	Ohtsuka, Nobuaki	365/185.23
	E	US-			
	F	US-			
	G	US-			
	H	US-			
	I	US-			
	J	US-			
	K	US-			
	L	US-			
	M	US-			

FOREIGN PATENT DOCUMENTS

*		Document Number Country Code-Number-Kind Code	Date MM-YYYY	Country	Name	Classification
	N					
	O					
	P					
	Q					
	R					
	S					
	T					

NON-PATENT DOCUMENTS

*		Include as applicable: Author, Title Date, Publisher, Edition or Volume, Pertinent Pages)
	U	
	V	
	W	
	X	

*A copy of this reference is not being furnished with this Office action. (See MPEP § 707.05(a).)
Dates in MM-YYYY format are publication dates. Classifications may be US or foreign.

UNITED STATES PATENT AND TRADEMARK OFFICE

Commissioner for Patents
United States Patent and Trademark Office
P.O. Box 1450
Alexandria, VA 22313-1450
www.uspto.gov

LATTICE SEMICONDUCTOR
CORPORATION
5555 NE MOORE COURT
HILLSBORO OR 97124-6421

COPY MAILED

MAY 27 2009

OFFICE OF PETITIONS

In re Application of :
McLaury, et al. :
Application No. 11/487,647 : DECISION
Filed/Deposited: 17 July, 2006 :
Attorney Docket No. **M-16535 US** :

This is a decision on the petition filed on 20 March, 2009, considered as a petition under 37 C.F.R. §1.181 (no fee) requesting withdrawal of the holding of abandonment in the above-identified application.

It is noted that the address on the petition is different than that of record. If Petitioner desires to receive future correspondence regarding this application, the appropriate Notice must be submitted. A courtesy copy of this decision will be mailed to Petitioner. However, all future correspondence will be directed to the address of record until such time as appropriate instructions are received to the contrary.

The petition under 37 C.F.R. §1.181 is **DISMISSED**.

This is **not** a final agency action within the meaning of 5 U.S.C. §704.

Any further petition to revive must be submitted within TWO (2) MONTHS from the mail date of this decision. Extensions of time under 37 C.F.R. §1.136(a) are permitted. The reconsideration request should include a cover letter entitled "Renewed Petition under 37 C.F.R. §1.181 to Withdraw the Holding of Abandonment."

It appears that Petitioner's only alternative is to properly file a petition to the Commissioner under 37 C.F.R. §1.137(b) requesting revival of an application abandoned due to unintentional delay.

As to the Request to Withdraw
the Holding of Abandonment

Petitioner's attention is directed to the Commentary at MPEP §711.03(c)(I) for guidance as to the proper showing and timeliness requirements for relief under 37 C.F.R. §1.181.

Petitioner appears not to satisfy the showing requirements set forth in the guidance in the Commentary at MPEP §711.03(c)(I).

For reference: Petitioners' attentions are directed to the guidance set forth in the Commentary at MPEP §711.03(c)(I)—and with particularity to the requirements therein including statements of non-receipt at the address of record, search and non-discovery, with a description of docketing system and a statement of its reliability, and support for those the statements with copies of the docket record/file jacket cover and due date calendar/docket. (Further, the regulations at 37 C.F.R. §1.181 require that a Petitioner seek relief thereunder within two (2) months of the act complained of.)

BACKGROUND

The record reflects as follows:

Petitioner failed to reply timely and properly to the Notice of Allowance/Allowability and Fees Due (copy enclosed) mailed on 26 June, 2008, with reply due under a non-extendable deadline on or before 26 September, 2008.

The application went abandoned by operation of law after midnight 26 September, 2008.

The Office mailed a Notice of Abandonment on 20 October, 2008.

On 23 January, 2009, Petitioner filed, *inter alia*, a petition pursuant to 37 C.F.R. §1.181 seeking withdrawal of the holding of abandonment and indicating the basis of the averment as non-receipt of the Notice. Petitioner also included therewith no supporting documentation, but only the argument that the Petitioner had Noticed the Office as to a change of address on 29 September, 2006, and the Office apparently never had incorporated that change into its records. Petitioner is correct that a paper was filed—however, Petitioner never Noticed the Office. The record clearly evidences:

- the correspondence address of record (obtained by the Office from the Transmittal Cover Sheet) on filing of the application on 17 July, 2006, was: MacPherson Kwok Chen & Heid LLP, 1762 Technology Drive/Ste. 226, San Jose, CA 95110;

- on 7 August, 2006, the Office mailed to the correspondence address of record (MacPherson Kwok Chen & Heid LLP, 1762 Technology Drive/Ste. 226, San Jose, CA 95110) a Notice of Missing Parts (*inter alia*, oath/declaration);

- on 29 September, 2006, a reply in the form of, *inter alia*, and oath/declaration was filed of record—while review of the paper now reveals that a Customer Number (32605) is listed within (at page two of) the oath/declaration, *there was no Notice of Change of Address included at that time or filed thereafter to call attention to the intent to change the correspondence address of record*;

- moreover, at the time of the decision as to the 23 January, 2009, petition, Customer Number 32605 continued to be associated with Alan MacPherson, of MacPherson Kwok Chen & Heid LLP, though at a different San Jose, CA, address (the address set forth on the petition);

- the Office mailed the 26 June, 2008, Notice of Allowance/Allowability and Fees Due to the then-address of record, to wit: MacPherson Kwok Chen & Heid LLP, 1762 Technology Drive/Ste. 226, San Jose, CA 95110.

The decision of 13 March, 2009, dismissing the petition also noted:

- the oath/declaration filed on 29 September, 2006 does not Notice the Office or otherwise call attention to the fact that a change of address is being made;

- no Notice of Change of Address was filed as to the instant application before the Office mailed the Notice of Allowance/Allowability and Fees Due on 26 June, 2008;

- the Customer Number of record (for Lattice Semiconductor Corporation) is 29416 and no Notice of Change of Address associated with that Customer Number was filed before the Office mailed the Notice of Allowance/Allowability and Fees Due on 26 June, 2008.

As indicated above, the 23 January, 2009, petition was dismissed on 13 March, 2009.

Petitioner filed on 20 March, 2009, a petition pursuant to 37 C.F.R. §1.181 seeking withdrawal of the holding of abandonment and submitted copies of a "master docket report" for the application and of "the docket report for the then-responsible attorney"—the latter of which is not compliant with the requirements in the guidance in the Commentary at MPEP §711.03(c)(I).

The guidance in the Commentary at MPEP §601.03 provides in pertinent part:

***

> 37 C.F.R. §1.33(a) provides that the application must specify a correspondence address to which the Office will send notice, letters, and other communications relating to an

application. The correspondence address must either be in an application data sheet (37 C.F.R. §1.76) or in a clearly identifiable manner elsewhere in any papers submitted with the application filing.

***

Where a correspondence address has been established on filing of the application or changed pursuant to 37 C.F.R. §1.33(a)(1) (prior to the filing of an executed oath or declaration under 37 C.F.R. §1.63 by any of the inventors), that correspondence address remains in effect upon filing of an executed oath or declaration under 37 C.F.R. §1.63 and can only be subsequently changed pursuant to 37 C.F.R. §1.33(a)(2).

***

The required notification of change of correspondence address need take no particular form. *However, it should be provided in a manner calling attention to the fact that a change of address is being made. Thus, the mere inclusion, in a paper being filed for another purpose, of an address which is different from the previously provided correspondence address, without mention of the fact that an address change is being made would not ordinarily be recognized or deemed as instructions to change the correspondence address on the file record.* (Emphasis supplied.)

***

The problem that Petitioner faces here is that Petitioner cannot make the required showing consistent the guidance in the Commentary at MPEP §711.03(c)(I)) to satisfy the mandated showings pursuant to 37 C.F.R. §1.181, which provides in pertinent part:

***

The showing required to establish nonreceipt of an Office communication must include a statement from the practitioner describing the system used for recording an Office action received at the correspondence address of record with the USPTO. The statement should establish that the docketing system is sufficiently reliable. It is expected that the record would include, but not be limited to, the application number, attorney docket number, the mail date of the Office action and the due date for the response.

Practitioner must state that the Office action was not received at the correspondence address of record, and that a search of the practitioner's record(s), including any file jacket or the equivalent, and the application contents, indicates that the Office action was not received. A copy of the record(s) used by the practitioner where the non-received Office action would have been entered had it been received is required.

A copy of the practitioner's record(s) required to show non-receipt of the Office action should include the master docket for the firm. That is, if a three month period for reply was set in the nonreceived Office action, a copy of the master docket report showing all replies docketed for a date three months from the mail date of the nonreceived Office action must be submitted as documentary proof of nonreceipt of the Office action. If no such master docket exists, the practitioner should so state and provide other evidence

> such as, but not limited to, the following: the application file jacket; incoming mail log; calendar; reminder system; or the individual docket record for the application in question.[1]
>
> ***

The Notice to the Office as to change of address for the customer number did not take place before the Office mailed the Notice of Allowance/Allowability and Fees Due.

Thus, as indicated earlier in this decision (see the discussion immediately before the BACKGROUND and with more particularity the excerpts from the MPEP, above), the guidance in the Commentary at MPEP §711.03(c)(I)) sets forth a particular set of statements (e.g., docketing system sufficiently reliable) and documents (e.g., due-date calendar/due-date docket for the firm) that must be provided by Petitioner to satisfy the mandated showings pursuant to 37 C.F.R. §1.181.

Again, this Petitioner apparently cannot do.

Petitioner's only apparent alternative at this point is to file a petition to revive, averring unintentional delay, pursuant to 37 C.F.R. §1.137(b)—and ensure either that the petition is signed by the attorney under whose control the application went abandoned or make and state that one has made the requisite diligent inquiry to ensure the unintentional nature of the delay. Petitioner further is cautioned that failure to act promptly in this regard may be considered as *indicia* of delay that is not unintentional.

Out of an abundance of caution, Petitioners always are reminded that the filing of a petition under 37 C.F.R. §1.181 does not toll any periods that may be running any action by the Office and a petition seeking relief under the regulation must be filed within two (2) months of the act complained of (*see*: 37 C.F.R. §1.181(f)), and those registered to practice and all others who make representations before the Office **must** inquire into the underlying facts of representations made to the Office and support averments with the appropriate documentation–since all owe to the Office the continuing duty to disclose.[2]

The availability of applications and application papers online to applicants/practitioners who diligently associate their Customer Number with the respective application(s) now provides an applicant/practitioner on-demand information as to events/transactions in an application.

---

[1] *See*: MPEP §711.03(c) (I)(A).

[2] See supplement of 17 June, 1999. The Patent and Trademark Office is relying on Petitioner's duty of candor and good faith and accepting a statement made by Petitioner. See Changes to Patent Practice and Procedure, 62 Fed. Reg. at 53160 and 53178, 1203 Off. Gaz. Pat. Office at 88 and 103 (responses to comments 64 and 109)(applicant obligated under 37 C.F.R. §10.18 to inquire into the underlying facts and circumstances when providing statements to the Patent and Trademark Office).

STATUTES, REGULATIONS

Congress has authorized the Commissioner to "revive an application if the delay is shown to the satisfaction of the Commissioner to have been "unavoidable." 35 U.S.C. §133 (1994).

Allegations as to the Request to
Withdraw the Holding of Abandonment

The guidance in the Commentary at MPEP §711.03(c)(I) specifies the showing required and how it is to be made and supported.

Petitioner appears not to have made the showing required.

CONCLUSION

Accordingly, the petition under 37 C.F.R. §1.181 is **dismissed**.

ALTERNATIVE VENUE

Should Petitioner wish to revive the application, Petitioner may wish to properly file a petition to the Commissioner requesting revival of an application abandoned due to unintentional delay under 37 C.F.R. §1.137(b). (See:
http://www.uspto.gov/web/offices/pac/mpep/documents/0700_711_03_c.htm#sect711.03c)

A petition to revive on the grounds of unintentional delay must be filed promptly and such petition must be accompanied by the reply, the petition fee, a statement that "the entire delay in filing the required reply from the due date for the reply until the filing of a grantable petition was unintentional," and a terminal disclaimer and fee where appropriate. (The statement is in the form available online.)

Further correspondence with respect to this matter should be addressed as follows:

By Mail: Mail Stop PETITION
Commissioner for Patents
P. O. Box 1450
Alexandria, VA 22313-1450

By hand: U. S. Patent and Trademark Office
Customer Service Window, Mail Stop Petitions
Randolph Building
401 Dulany Street
Alexandria, VA 22314

By facsimile: **(571) 273-8300**
Attn: Office of Petitions

Telephone inquiries regarding this decision may be directed to the undersigned at (571) 272-3214—it is noted, however, that all practice before the Office is in writing (see: 37 C.F.R. §1.2[3]) and the proper authority for action on any matter in this regard are the statutes (35 U.S.C.), regulations (37 C.F.R.) and the commentary on policy (MPEP). Therefore, no telephone discussion may be controlling or considered authority for Petitioner's action(s).

/John J. Gillon, Jr./
John J. Gillon, Jr.
Senior Attorney
Office of Petitions

cc
MACPHERSON, KWOK,
CHEN AND HEID, LLP
2033 GATEWAY PLACE
SUITE 400
SAN JOSE, CA 95110

[3] The regulations at 37 C.F.R. §1.2 provide:
§1.2 Business to be transacted in writing.
All business with the Patent and Trademark Office should be transacted in writing. The personal attendance of applicants or their attorneys or agents at the Patent and Trademark Office is unnecessary. The action of the Patent and Trademark Office will be based exclusively on the written record in the Office. No attention will be paid to any alleged oral promise, stipulation, or understanding in relation to which there is disagreement or doubt.

UNITED STATES PATENT AND TRADEMARK OFFICE

Commissioner for Patents
United States Patent and Trademark Office
P.O. Box 1450
Alexandria, VA 22313-1450
www.uspto.gov

Paper No.

LATTICE SEMICONDUCTOR CORPORATION
5555 NE MOORE COURT
HILLSBORO OR 97124-6421

COPY MAILED

OCT 14 2009

OFFICE OF PETITIONS

In re Application of :
McLaury et al. :
Application No. 11/487,647 : DECISION ON PETITION
Filed: July 17, 2006 : PURSUANT TO
Attorney Docket No.: M-16535 : 37 C.F.R. § 1.137(B)
US :
Title: FLASH MEMORY ARRAY :
WITH INDEPENDENTLY ERASABLE :
SECTORS :

This is a decision on the petition pursuant to 37 C.F.R. § 1.137(b), filed June 2, 2009, to revive the above-identified application.

This petition pursuant to 37 C.F.R. § 1.137(b) is **GRANTED**.

The above-identified application became abandoned for failure to submit the issue fee in a timely manner in reply to the Notice of Allowance and Issue Fee Due, mailed June 26, 2008, which set a shortened statutory period for reply of three months. No extensions of time are permitted for transmitting issue fees.[1] Accordingly, the above-identified application became abandoned on September 27, 2008. A Notice of Abandonment was mailed on October 20, 2008.

A grantable petition pursuant to 37 C.F.R. § 1.137(b) must be accompanied by:

(1) The reply required to the outstanding Office action or notice, unless previously filed;
(2) The petition fee as set forth in 37 C.F.R. § 1.17(m);
(3) A statement that the entire delay in filing the

1 See MPEP § 710.02(e)(III).

required reply from the due date for the reply until the filing of a grantable petition pursuant to this paragraph was unintentional. The Commissioner may require additional information where there is a question whether the delay was unintentional, and;

(4) Any terminal disclaimer (and fee as set forth in 37 C.F.R. § 1.20(d)) required pursuant to paragraph (d) of this section.

A petition pursuant to 37 C.F.R. § 1.181 was filed on January 23, 2009, and was dismissed via the mailing of a decision on March 13, 2009.

With this petition pursuant to 37 C.F.R. § 1.137(b), Petitioner has submitted the proper statement of unintentional delay, the petition fee, and the issue fee. As such, the first three requirements of Rule 1.137(b) have been met. The fourth requirement of Rule 1.137(b) is not applicable, as a terminal disclaimer is not required.[2]

Pursuant to this decision, the Office of Patent Publication will be notified of this decision so that the present application can be processed into a patent.

Petitioner may find it beneficial to view Private PAIR within a fortnight of the present decision to ensure that the revival has been acknowledged by the Office of Patent Publication in response to this decision. It is noted that all inquiries with regard to any failure of that change in status should be directed to the Office of Patent Publication where that change of status must be effected - **the Office of Petitions cannot effectuate a change of status.**

It is noted that the address listed on the petition differs from the address of record. The application file does not indicate a change of correspondence address has been filed in this case, although the address given on the petition differs from the address of record. If Petitioner desires to receive future correspondence regarding this application, the change of correspondence address must be submitted. A courtesy copy of this decision will be mailed to Petitioner. However, all future correspondence will be directed to the address of record until such time as appropriate instructions are received to the contrary. Petitioner will not receive future correspondence

2 See Rule 1.137(d).

related to this application unless Change of Correspondence Address, Patent Form (PTO/SB/122) is submitted for the above-identified application. For Petitioner's convenience, a blank Change of Correspondence Address, Patent Form (PTO/SB/122), may be found at http://www.uspto.gov/web/forms/sb0122.pdf.

It is not apparent whether the person signing the statement of unintentional delay was in a position to have firsthand or direct knowledge of the facts and circumstances of the delay at issue. Nevertheless, such statement is being treated as having been made as the result of a reasonable inquiry into the facts and circumstances of such delay.[3] In the event that such an inquiry has not been made, Petitioner must make such an inquiry. If such inquiry results in the discovery that the delay was intentional, Petitioner must notify the Office.

Telephone inquiries regarding *this decision* should be directed to the undersigned at (571) 272-3225.[4] All other inquiries concerning the status of the application should be directed to the Office of Patent Publication at 571-272-4200.

/Paul Shanoski/
Paul Shanoski
Senior Attorney
Office of Petitions

cc: Brent A. Folsom
Haynes and Boone, LLP
18200 Von Karman
Suite 725
Irvine, CA 92612

---

3 See 37 C.F.R. § 10.18(b); cf. Changes to Patent Practice and Procedure; Final Rule Notice, 62 Fed. Reg. 53131, 53178 (October 10, 1997), 1203 Off. Gaz. Pat. Office 63, 103 (October 21, 1997).

4 Petitioner will note that all practice before the Office should be in writing, and the action of the Office will be based exclusively on the written record in the Office. See 37 C.F.R. § 1.2. As such, Petitioner is reminded that no telephone discussion may be controlling or considered authority for any further action(s) of Petitioner.

UNITED STATES PATENT AND TRADEMARK OFFICE

UNITED STATES DEPARTMENT OF COMMERCE
United States Patent and Trademark Office
Address: COMMISSIONER FOR PATENTS
P.O. Box 1450
Alexandria, Virginia 22313-1450
www.uspto.gov

LATTICE SEMICONDUCTOR CORPORATION
5555 NE MOORE COURT
HILLSBORO, OR 97124-6421

Mail Date: 04/20/2010

Applicant	: Loren McLaury	: DECISION ON REQUEST FOR
Patent Number	: 7636259	: RECALCULATION of PATENT
Issue Date	: 12/22/2009	: TERM ADJUSTMENT IN VIEW
Appliction No	: 11/487,647	: OF WYETH AND NOTICE OF INTENT TO
Filed	: 07/17/2006	: ISSUE CERTIFICATE OF CORRECTION
		:

The Request for Recalculation is **GRANTED** to the extent indicated.

The patent term adjustment has been determined to be **613** days. The USPTO will *sua sponte* issue a certificate of correction reflecting the amount of PTA days determined by the recalculation.

Prior to the issuance of the certificate of correction, the USPTO will afford patentee an opportunity to be heard and request reconsideration. Accordingly, patentee has **one month or thirty (30) days**, whichever is longer, to file a request for reconsideration of this patent term adjustment calculation. See 35 U.S.C. 154(b)(3)(B)(ii) and 37 CFR 1.322(a)(4). No extensions of time will be granted under 37 CFR 1.136.

Patentee should use document code PET.OP if electronically filing a request for reconsideration of this patent term adjustment calculation. The patentee must also include the information required by 37 CFR 1.705(b)(2) and the fee required by 37 CFR 1.18(e). If patentee does not file a timely request for reconsideration of this patent term adjustment calculation including the information required by 37 CFR 1.705(b)(2) and the fee required by 37 CFR 1.18(e), the USPTO will issue a certificate of correction reflecting the PTA determination noted above.

Patentee should be aware that in order to preserve the right to review in the United States District Court for the District of Columbia of the USPTO patent term adjustment determination, patentee must ensure that he or she also take the steps required under 35 U.S.C. 154(b)(4)(A) in a timely manner. Nothing in the request for recalculation should be construed as providing an alternative time frame for commencing a civil action under 35 U.S.C. 154(b)(4)(A).

Any questions concerning this decision should be directed to the Office of Patent Legal Administration at 571-272-7702.

UNITED STATES PATENT AND TRADEMARK OFFICE

UNITED STATES DEPARTMENT OF COMMERCE
United States Patent and Trademark Office
Address: COMMISSIONER FOR PATENTS
P.O. Box 1450
Alexandria, Virginia 22313-1450
www.uspto.gov

REISING, ETHINGTON, BARNES, KISSELLE, P.C.
P.O. BOX 4390
TROY, MI 48099-4390

Mail Date: 04/21/2010

Applicant	: Maurice R. Gnepper	: DECISION ON REQUEST FOR
Patent Number	: 7581656	: RECALCULATION of PATENT
Issue Date	: 09/01/2009	: TERM ADJUSTMENT IN VIEW
Appliction No	: 11/487,665	: OF WYETH AND NOTICE OF INTENT TO
Filed	: 07/17/2006	: ISSUE CERTIFICATE OF CORRECTION
		:

The Request for Recalculation is **GRANTED** to the extent indicated.

The patent term adjustment has been determined to be **197** days. The USPTO will *sua sponte* issue a certificate of correction reflecting the amount of PTA days determined by the recalculation.

Prior to the issuance of the certificate of correction, the USPTO will afford patentee an opportunity to be heard and request reconsideration. Accordingly, patentee has **one month or thirty (30) days**, whichever is longer, to file a request for reconsideration of this patent term adjustment calculation. See 35 U.S.C. 154(b)(3)(B)(ii) and 37 CFR 1.322(a)(4). No extensions of time will be granted under 37 CFR 1.136.

Patentee should use document code PET.OP if electronically filing a request for reconsideration of this patent term adjustment calculation. The patentee must also include the information required by 37 CFR 1.705(b)(2) and the fee required by 37 CFR 1.18(e). If patentee does not file a timely request for reconsideration of this patent term adjustment calculation including the information required by 37 CFR 1.705(b)(2) and the fee required by 37 CFR 1.18(e), the USPTO will issue a certificate of correction reflecting the PTA determination noted above.

Patentee should be aware that in order to preserve the right to review in the United States District Court for the District of Columbia of the USPTO patent term adjustment determination, patentee must ensure that he or she also take the steps required under 35 U.S.C. 154(b)(4)(A) in a timely manner. Nothing in the request for recalculation should be construed as providing an alternative time frame for commencing a civil action under 35 U.S.C. 154(b)(4)(A).

Any questions concerning this decision should be directed to the Office of Patent Legal Administration at 571-272-7702.

UNITED STATES PATENT AND TRADEMARK OFFICE

Commissioner for Patents
United States Patent and Trademark Office
P.O. Box 1450
Alexandria, VA 22313-1450
www.uspto.gov

APPLICATION NUMBER	FILING/RECEIPT DATE	FIRST NAMED APPLICANT	ATTORNEY DOCKET NUMBER
11/487670	07/17/06	Fazio	400.058US02

7590
Leffert Jay & Polglaze, P.A.
Attn: Thomas Leffert
P.O. Box 581009
Minneapolis, MN 55402

DATE MAILED: October 16, 2007

DECISION GRANTING PETITION UNDER 37 CFR 1.138
The declaration of express abandonment is recognized

This is in response to the petition under 37 CFR 1.138(d) filed on July 17, 2006 requesting for a refund any previously paid search fee and excess claims fee in the above-identified application, and the petition under 37 CFR 1.138(c) filed on April 16, 2007, for express abandonment to avoid publication of the above-identified application.

The petitions are granted.

The express abandonment is recognized. Any previously paid search fee and excess claims fee are hereby refunded. The application has been withdrawn from publication. A notice of abandonment will be mailed in due course.

Any inquiries concerning this decision should be directed to the Pre-Grant Publication Division at (703) 605-4283.

571-272-4200

Pre-Grant Publication Division

UNITED STATES PATENT AND TRADEMARK OFFICE

Commissioner for Patents
United States Patent and Trademark Office
P.O. Box 1450
Alexandria, VA 22313-1450
www.uspto.gov

CARTER, DELUCA, FARRELL & SCHMIDT, LLP
445 BROAD HOLLOW ROAD
SUITE 420
MELVILLE NY 11747

COPY MAILED

MAY 22 2009

OFFICE OF PETITIONS

In re Application of
Titi Trandafir et al.
Application No. 11/487,677
Filed: July 17, 2006
Attorney Docket No. 1429-34

DECISION ON PETITION
TO WITHDRAW
FROM RECORD

This is a decision on the Request to Withdraw as attorney or agent of record under 37 C.F.R. § 1.36(b), filed March 12, 2009 and supplemented April 9, 2009.

The request is **APPROVED**.

A grantable request to withdraw as attorney/agent of record must be signed by every attorney/agent seeking to withdraw or contain a clear indication that one attorney is signing on behalf of another/others.

The request was signed by David M. Carter on behalf of all attorneys of record who are associated with Customer No. 31554.

All attorneys/agents associated with the Customer No. 31554 have been withdrawn.

Applicant is reminded that there is no attorney of record at this time.

All future correspondence will be directed to the Juvent Inc. at the address of record which is indicated below until otherwise properly notified by the applicant.

There is no outstanding Office action that requires a reply from the applicant.

Telephone inquiries concerning this decision should be directed to JoAnne Burke at (571)272-4584.

Ramesh Krishnamurthy
Petitions Examiner
Office of Petitions

cc: Juvent, Inc.
300 Atrium Drive, Suite 210
Somerset, NJ 08873

UNITED STATES PATENT AND TRADEMARK OFFICE

Commissioner for Patents
United States Patent and Trademark Office
P.O. Box 1450
Alexandria, VA 22313-1450
www.uspto.gov

MAILED

APR 26 2010

OFFICE OF PETITIONS

HARRY G. WEISSENBERGER
PO BOX 938
2401 COOPER STREET
FORT SCOTT, KS 66701

In re Application of :
Jesse D. Crum :
Application No. 11/487,712 : DECISION ON PETITION
Filed: July 17, 2006 :
Attorney Docket No. WK/2006-06/US :

This is a decision on the petition under the unintentional provisions of 37 CFR 1.137(b), filed February 9, 2010, to revive the above-identified application.

The petition is **GRANTED**.

This application became abandoned for failure to timely pay the issue and publication fees on or before November 25, 2009, as required by the Notice of Allowance and Fee(s) Due, mailed August 25, 2009. Accordingly, the date of abandonment of this application is November 26, 2009.

The petition satisfies the requirements of 37 CFR 1.137(b) in that petitioner has supplied (1) the reply in the form of payment of the issue fee of $755 and the publication fee of $300, (2) the petition fee of $810; and (3) a proper statement of unintentional delay.

There is no indication that petitioner has submitted a Part B-Fee(s) Transmittal form (PTOL-85). Accordingly, if petitioner desires to have the information normally found thereon printed on the patent, the attached blank Fee(s) Transmittal form should be completed and returned to the Publishing Division within **ONE MONTH** from the mail date of this decision.

Telephone inquiries concerning this decision should be directed to undersigned at (571) 272-1642. All other inquiries concerning the examination or status of this application should be directed to the Office of Data Management at their hotline 571-272-4200.

This application is being referred to the Office of Data Management for processing into a patent.

April M. Wise
Petitions Examiner
Office of Petitions

Attachment: Form PTOL-85 Part B Transmittal previously mailed August 25, 2009.

UNITED STATES PATENT AND TRADEMARK OFFICE

Commissioner for Patents
United States Patent and Trademark Office
P.O. Box 1450
Alexandria, VA 22313-1450
www.uspto.gov

Paper No.

Mr. Joseph A. Sawyer, Jr.
SAWYER LAW GROUP LLP
Suite 406
2465 East Bayshore Road
Palo Alto CA 94303

COPY MAILED

NOV 17 2008

OFFICE OF PETITIONS

In re Application of
Shih-Ping Hsu
Application No. 11/487,721
Filed: July 17, 2006
Attorney Docket Number:
24148US/3919P
Title: CIRCUIT BOARD WITH OPTOELECTRONIC COMPONENT EMBEDDED THEREIN

DECISION ON PETITION PURSUANT TO 37 C.F.R. § 1.137(B)

This is a decision on the petition pursuant to 37 C.F.R. § 1.137(b), filed July 8, 2008, to revive the above-identified application.

This petition pursuant to 37 C.F.R. § 1.137(b) is **GRANTED.**

The above-identified application became abandoned for failure to reply in a timely manner to the non-final Office action, mailed September 19, 2007, which set a shortened statutory period for reply of three months. No response was received, and no extensions of time under the provisions of 37 C.F.R. § 1.136(a) were requested. Accordingly, the above-identified application

became abandoned on December 20, 2007. A notice of abandonment was mailed on April 28, 2008.

A grantable petition pursuant to 37 C.F.R. § 1.137(b) must be accompanied by:

(1) The reply required to the outstanding Office action or notice, unless previously filed;
(2) The petition fee as set forth in 37 C.F.R. § 1.17(m);
(3) A statement that the entire delay in filing the required reply from the due date for the reply until the filing of a grantable petition pursuant to this paragraph was unintentional. The Commissioner may require additional information where there is a question whether the delay was unintentional, and;
(4) Any terminal disclaimer (and fee as set forth in 37 C.F.R. § 1.20(d)) required pursuant to paragraph (d) of this section.

With this petition, Petitioner has submitted the petition fee, an amendment, and the proper statement of unintentional delay. A terminal disclaimer is not required. As such, the first three requirements of Rule 1.137(b) have been met. The fourth requirement is not applicable.

The Technology Center will be notified of this decision. The Technology Center's support staff will notify the Examiner of this decision, so that the amendment that was received on July 8, 2008 can be processed.

Petitioner may find it beneficial to view Private PAIR within a fortnight of the present decision to ensure that the revival has been acknowledged by the Technology Center in response to this decision. It is noted that all inquiries with regard to any failure of that change in status should be directed to the Technology Center where that change of status must be effected - **the Office of Petitions cannot effectuate a change of status.**

Telephone inquiries regarding *this decision* should be directed to the undersigned at (571) 272-3225[1]. All other inquiries

1 Petitioner will note that all practice before the Office should be in writing, and the action of the Office will be based exclusively on the written record in the Office. See 37 C.F.R. § 1.2. As such, Petitioner is reminded that no telephone discussion may be controlling or considered authority for Petitioner's further action(s).

concerning examination procedures or status of the application should be directed to the Technology Center.

/Paul Shanoski/
Paul Shanoski
Senior Attorney
Office of Petitions

UNITED STATES PATENT AND TRADEMARK OFFICE

Commissioner for Patents
United States Patent and Trademark Office
P.O. Box 1450
Alexandria, VA 22313-1450
www.uspto.gov

COPY MAILED

DEC 0 8 2006

OFFICE OF PETITIONS

MARSHALL GERSTEIN & BORUN LLP
233 S WACKER DRIVE SUITE 6300
SEARS TOWER
CHICAGO IL 60606

In re Application of :
Crager, et al. : DECISION ACCORDING STATUS
Application No. 11/487,733 : UNDER 37 CFR 1.47(a)
Filed: July 7, 2006 :
Attorney Docket No. 30481/30001B :

This is in response to the petition under 37 CFR 1.47(a), filed October 10, 2006.

The petition under 37 CFR 1.47(a) is **GRANTED**.

Petitioner has shown that non-signing inventor Harkonen has refused to sign the declaration after having been forwarded the application papers.

The above-identified application and papers have been reviewed and found to be in compliance with 37 CFR 1.47(a). Accordingly, the above-identified application is hereby accorded Rule 1.47(a) status. As provided in 37 CFR 1.47(c), this Office will forward notice of this application's filing to the non-signing inventor at the last known address provided in the petition. Notice of the filing of this application will also be published in the Official Gazette.

The matter is being forwarded to the Office of Initial Patent Examination for pre-examination processing.

Telephone inquiries related to this decision may be directed to the undersigned at (571)272-3207.

Cliff Congo
Petitions Attorney
Office of Petitions

UNITED STATES PATENT AND TRADEMARK OFFICE

Commissioner for Patents
United States Patent and Trademark Office
P.O. Box 1450
Alexandria, VA 22313-1450
www.uspto.gov

SCOTT HARKONEN
125 MONTALVO AVE
SAN FRANCISCO CA 94116

COPY MAILED

DEC 0 8 2006

OFFICE OF PETITIONS

In re Application of :
Michael Crager, Scott Harkonen :
Application No. 11/487,733 :
Filed: July 17, 2006 :
Title: Methods of Treating Idiopathic Pulmonary Fibrosis : LETTER

Dear Mr. Harkonen:

You are named as a joint inventor in the above-identified United States patent reissue application filed under the provisions of 35 USC 116 (United States Code) and 37 CFR 1.47(a), Rules of Practice in Patent Cases. Should a patent be granted on the application you will be designated therein as a joint inventor.

As a named inventor you are entitled to inspect any paper in the file wrapper of the application, order copies of all or any part thereof (at a prepaid cost per 37 CFR 1.19) or make your position of record in the application. Alternatively, you may arrange to do any of the preceding through a registered patent attorney or agent presenting written authorization from you. If you care to join the application, agent of record (see below) would presumably assist you. Joining in the application would entail the filing of an appropriate oath or declaration by you pursuant to 37 CFR 1.63.

Telephone inquiries regarding this communication should be directed to Petitions Attorney Cliff Congo at (571)272-3207. Requests for information regarding your application should be directed to the File Information Unit at (703) 308-2733. Information regarding how to pay for and order a copy of the application, or a specific paper in the application, should be directed to the Certification Division at (703) 308-9726 or 1-800-972-6382 (outside the Washington D.C. area).

Cliff Congo
Petitions Attorney
Office of Petitions

Marshall Gerstein & Borun LLP
233 S. Wacker Dr Suite 6300
Sears Tower
Chicago IL 60606-6357
phone: 312-474-6300

UNITED STATES PATENT AND TRADEMARK OFFICE

Commissioner for Patents
United States Patent and Trademark Office
P.O. Box 1450
Alexandria, VA 22313-1450
www.uspto.gov

DELPHINE M JAMES
2656 SOUTH LOOP WEST #170
HOUSTON TX 77054

MAILED

OCT 0 1 2009

OFFICE OF PETITIONS

In re Application of :
Christine Brown Smith :
Application No. 11/487,753 : DECISION ON
Filed: July 17, 2006 : PETITION
Title: Multi-level Stack-a-Plate :
Arrangement

This is in response to the petition to revive under 37 CFR 1.137(b), filed August 13, 2009.

The petition under 37 CFR 1.137(b) is **GRANTED**.

The above application became abandoned for failure to timely file corrected drawings in response to the Notice of Allowability, mailed March 23, 2009. This Notice set a statutory period for reply of three months. No reply having been received, the application became abandoned on June 24, 2009. The Office mailed a Notice of Abandonment on July 16, 2009.

With the instant petition, applicant paid the petition fee, submitted the required reply in the form of drawings, and made the proper statement of unintentional delay.

The matter is being forwarded to the Office of Data Management for processing into a patent.

Telephone inquiries related to this decision should be directed to the undersigned at 571-272-3207.

Cliff Congo
Petitions Attorney
Office of Petitions

UNITED STATES PATENT AND TRADEMARK OFFICE

Commissioner for Patents
United States Patent and Trademark Office
P.O. Box 1450
Alexandria, VA 22313-1450
www.uspto.gov

DONALD E. SCHREIBER
PO BOX 2926
KINGS BEACH, CA 96143

COPY MAILED

MAR 2 8 2007

OFFICE OF PETITIONS

In re Application of :
PITTS, William M. :
Application No. 11/487,789 : DECISION ON PETITION
Filed: July 17, 2006 : TO WITHDRAW
Attorney Docket No. **2240** : FROM RECORD
:

This is a decision on the Request to Withdraw as attorney or agent of record under 37 C.F.R. § 1.36(b), filed October 02, 2006.

The request is **NOT APPROVED**.

A grantable request to withdraw as attorney/agent of record must be signed by every attorney/agent seeking to withdraw or contain a clear indication that one attorney is signing on behalf of another/others. A request to withdraw will not be approved unless at least 30 (thirty) days would remain between the date of approval and the later of the expiration date of a time to file a response or the expiration date of the maximum time period which can be extended under 37 C.F.R. § 1.136(a).

The request cannot be approved because no reasons for withdrawal have been provided. The Office cannot, at this time, determine whether practitioner's request is one of the mandatory or permissive reasons enumerated in 37 CFR 10.40. Any subsequent requests must be include reasons for withdrawal. Please note that there is a space provided for on PTO/SB/83 (Request to Withdraw as Attorney or Agent) to supply practitioner's reasons.

All future communications from the Office will continue to be directed to the above-listed address until otherwise notified by applicant.

Telephone inquiries concerning this decision should be directed to Michelle R. Eason at 571-272- 4231.

Terri Williams
Petitions Examiner
Office of Petitions

cc: **WILLIAM M. PITTS**
780 MORA DRIVE
LOS ALTOS, CA 94024

UNITED STATES PATENT AND TRADEMARK OFFICE

Commissioner for Patents
United States Patent and Trademark Office
P.O. Box 1450
Alexandria, VA 22313-1450
www.uspto.gov

DONALD E. SCHREIBER
POST OFFICE BOX 2926
KINGS BEACH, CA 96143-2926

COPY MAILED

OCT 30 2007

OFFICE OF PETITIONS

In re Application of

PITTS, William M.
Application No. 11/487,789
Filed: July 17, 2006
Attorney Docket No. **2240**

DECISION ON PETITION
TO WITHDRAW
FROM RECORD

This is a decision on the Request to Withdraw as attorney or agent of record under 37 C.F.R. § 1.36(b), filed September 05, 2007.

The request is **NOT APPROVED**.

A grantable request to withdraw as attorney/agent of record must be signed by every attorney/agent seeking to withdraw or contain a clear indication that one attorney is signing on behalf of another/others. A request to withdraw will not be approved unless at least 30 (thirty) days would remain between the date of approval and the later of the expiration date of a time to file a response or the expiration date of the maximum time period which can be extended under 37 C.F.R. § 1.136(a).

The Office cannot approve the request at this time since the reasons provided do not meet any of the conditions under the mandatory or permissive categories enumerated in 37 CFR 10.40. Section 10.40 of Title 37 of the Code of Federal Regulation states, "[a] practitioner shall not withdraw from employment in a proceeding before the Office without permission from the Office[.]" More specifically, 37 CFR 10.40 states, "[i]f paragraph (b) of this section is not applicable, a practitioner may not request permission to withdraw in matter pending before the Office unless such request or such withdrawal is" for one the permissive reasons listed in 37 CFR 10.40(c). The reasons set forth in the request, (petitioner's client insisted that the practitioner pursue a course of conduct that would violate 37 CFR 10.61), does not meet any the conditions set forth in 37 CFR 10.40.

All future communications from the Office will continue to be directed to the above-listed address until otherwise notified by applicant.

Telephone inquiries concerning this decision should be directed to the undersigned at 571-272- 4231.

Michelle R. Eason
Petitions Examiner
Office of Petitions

cc: **WILLIAMS M. PITTS**
780 MORA DRIVE
LOS ALTOS, CA 94024

UNITED STATES PATENT AND TRADEMARK OFFICE

Commissioner for Patents
United States Patent and Trademark Office
P.O. Box 1450
Alexandria, VA 22313-1450
www.uspto.gov

Paper No.

CNH AMERICA LLC
INTELLECTUAL PROPERTY LAW DEPARTMENT
PO BOX 1895, M.S. 641
NEW HOLLAND PA 17557

COPY MAILED

DEC 10 2008

OFFICE OF PETITIONS

In re Application of	:	DECISION ON PETITION
Strosser et al.	:	and
Application No. 11/487,816	:	**NOTICE OF NONACCEPTANCE OF**
Filed: July 17, 2006	:	**CHANGE OF CORRESPONDENCE**
Atty Docket No. 18164	:	**ADDRESS**

This is a decision on the PETITION TO REVIVE PATENT APPLICATION - FAILURE TO PAY ISSUE FEE UNINTENTIONAL (37 C.F.R. §§1.137(b) and 1.316) filed July 21, 2008.

The petition is **GRANTED**.

The above-identified application became abandoned for failure to pay the Issue Fee and Publication Fee within three months of the mailing date, March 17, 2008, of the Notice of Allowance and Fee(s) Due. This Office action set a three-month nonextendable statutory period for reply. No reply filed, the above-identified application became abandoned effective June 18, 2008. A courtesy Notice of Abandonment was mailed on July 16, 2008.

In response, the instant petition was promptly filed. The petition included the required reply[1] in the form of payment of the Issue Fee and Publication Fee; payment of the petition fee set forth in 37 CFR § 1.17(m); and the required statement of unintentional delay. No terminal disclaimer is required.

It is concluded that all requirements of 37 CFR 1.137(b) have been met.

[1] There was no distinct but concurrent requirement for corrected drawings.

Accompanying the petition was a change of correspondence address signed by Patrick Sheldrake as attorney of record. However, no attorneys are of record in this application. A review of the application as filed reveals that the executed declaration gave a power of attorney to customer number 22813. This appears to be in error, no attorneys are associated with such a customer number and the correspondence address currently associated with this application is 28813. Before the address of this application can be changed to that associated with customer No. 23406 a change of correspondence address must be filed by a proper party. See 37 CFR 1.33(b).

It is noted that the address associated with 23406 appears to be the same address associated with 28813, the address of record. However, unless a proper change of address is filed, any changes to 23406 will not be entered in this application.

The Office of Data Management (formerly known as the Office of Patent Publication) has been advised of this decision. The application is, thereby, forwarded for processing into a patent.

Telephone inquiries related to this decision should be directed to the undersigned at (571) 272-3219.

Nancy Johnson
Senior Petitions Attorney
Office of Petitions

UNITED STATES PATENT AND TRADEMARK OFFICE

UNITED STATES DEPARTMENT OF COMMERCE
United States Patent and Trademark Office
Address: COMMISSIONER FOR PATENTS
P.O. Box 1450
Alexandria, Virginia 22313-1450
www.uspto.gov

F. CHAU & ASSOCIATES, LLC
130 WOODBURY ROAD
WOODBURY, NY 11797

Mail Date: 04/20/2010

Applicant	: Young-Wook Lee	: DECISION ON REQUEST FOR
Patent Number	: 7599015	: RECALCULATION of PATENT
Issue Date	: 10/06/2009	: TERM ADJUSTMENT IN VIEW
Appliction No	: 11/487,837	: OF WYETH AND NOTICE OF INTENT TO
Filed	: 07/17/2006	: ISSUE CERTIFICATE OF CORRECTION
		:

The Request for Recalculation is **GRANTED** to the extent indicated.

The patent term adjustment has been determined to be **557** days. The USPTO will *sua sponte* issue a certificate of correction reflecting the amount of PTA days determined by the recalculation.

Prior to the issuance of the certificate of correction, the USPTO will afford patentee an opportunity to be heard and request reconsideration. Accordingly, patentee has **one month or thirty (30) days**, whichever is longer, to file a request for reconsideration of this patent term adjustment calculation. See 35 U.S.C. 154(b)(3)(B)(ii) and 37 CFR 1.322(a)(4). No extensions of time will be granted under 37 CFR 1.136.

Patentee should use document code PET.OP if electronically filing a request for reconsideration of this patent term adjustment calculation. The patentee must also include the information required by 37 CFR 1.705(b)(2) and the fee required by 37 CFR 1.18(e). If patentee does not file a timely request for reconsideration of this patent term adjustment calculation including the information required by 37 CFR 1.705(b)(2) and the fee required by 37 CFR 1.18(e), the USPTO will issue a certificate of correction reflecting the PTA determination noted above.

Patentee should be aware that in order to preserve the right to review in the United States District Court for the District of Columbia of the USPTO patent term adjustment determination, patentee must ensure that he or she also take the steps required under 35 U.S.C. 154(b)(4)(A) in a timely manner. Nothing in the request for recalculation should be construed as providing an alternative time frame for commencing a civil action under 35 U.S.C. 154(b)(4)(A).

Any questions concerning this decision should be directed to the Office of Patent Legal Administration at 571-272-7702.

UNITED STATES PATENT AND TRADEMARK OFFICE

UNITED STATES DEPARTMENT OF COMMERCE
United States Patent and Trademark Office
Address: COMMISSIONER FOR PATENTS
P.O. Box 1450
Alexandria, Virginia 22313-1450
www.uspto.gov

APPLICATION NO.	FILING DATE	FIRST NAMED INVENTOR	ATTORNEY DOCKET NO.	CONFIRMATION NO.
11/487,846	07/17/2006	Sung-Wook Bang	5000-1-897	6695

7590 06/29/2009

CHA & REITER, LLC
210 ROUTE 4 EAST STE 103
PARAMUS, NJ 07652

EXAMINER	
DEHGHAN, QUEENIE S	

ART UNIT	PAPER NUMBER
1791	

MAIL DATE	DELIVERY MODE
06/29/2009	PAPER

DECISION GRANTING PETITION UNDER 37 CFR 1.138(d)

The declaration of express abandonment is recognized

This is in response to the petition under 37 CFR 1.138(d), requesting for a refund of any previously paid search fee and excess claims fee in the above-identified application.

The petition is granted.

The express abandonment is recognized. Any previously paid search fee and excess claims fee are hereby refunded.

Telephone inquiries should be directed to the Office of Data Management at (571) 272-4200.

Betty Powell

Patent Publication Branch
Office of Data Management

Repin, Ref: 06/30/2009 BPOWELL 001523520
DAN:502470 Name/Number:11487846
FC: 9204 $500.00 CR

Payment date: 06/30/2009 BPOWELL
[illegible] 11487846
-500.00 UP

Repln. Ref: 06/30/2009 BPOWELL 0015235200
DA#:502470 Name/Number:11487846
FC: 9204 $500.00 CR

UNITED STATES PATENT AND TRADEMARK OFFICE

COMMISSIONER FOR PATENTS
UNITED STATES PATENT AND TRADEMARK OFFICE
P.O. BOX 1450
ALEXANDRIA, VA 22313-1450

NIXON PEABODY, LLP- PATENT GROUP
CLINTON SQUARE
P.O. BOX 31051
ROCHESTER, N. Y. 14603-1051

COPY MAILED

MAY 21 2008

OFFICE OF PETITIONS

Applicant: Molino, et al.
Appl. No.: 11/487,884
Filing Date: July 17, 2006
Title: ARYL AND HETEROARYL-SUBSTITUTED TETRAHYDROBENZAZEPINE AND USE THEREOF TO BLOCK REUPTAKE OF NOREPINEPHRINE, DOPAMINE AND SEROTONIN
Attorney Docket No.: 2809/1671
Pub. No.: US 2007/0021408 A1
Pub. Date: January 25, 2007

This is a decision on the request for a corrected patent application publication under 37 CFR 1.221(b), received on March 20, 2007, for the above-identified application. Applicant requests that the application be republished because the patent application publication contains material errors in several paragraphs in the specification, including subscripts in paragraph [0661], superscripts in paragraph [0978] and claim 6, in paragraph [0978] wherein "8-1" should be "8-I" and claim 7 wherein "R^{14}" was misprinted as "14" .

This is a decision on the request for corrected of patent application publication under 37 CFR 1.221(b), received on April 2, 2007, for the above-identified application.

The request is granted.

The corrected patent application publication will be published in due course, unless the patent issues before the application is republished.

Inquiries relating to this matter may be directed to Mark O. Polutta at (571) 272-7709.

Mark Polutta
Senior Legal Advisor
Office of Patent Legal Administration
Office of the Deputy Commissioner
for Patent Examination Policy

UNITED STATES PATENT AND TRADEMARK OFFICE

UNITED STATES DEPARTMENT OF COMMERCE
United States Patent and Trademark Office
Address: COMMISSIONER FOR PATENTS
P.O. Box 1450
Alexandria, Virginia 22313-1450
www.uspto.gov

DANN, DORFMAN, HERRELL & SKILLMAN
1601 MARKET STREET
SUITE 2400
PHILADELPHIA, PA 19103-2307

Mail Date: 05/07/2010

Applicant	: Kevin Kwong-Tai Chung	: DECISION ON REQUEST FOR
Patent Number	: 7614553	: RECALCULATION of PATENT
Issue Date	: 11/10/2009	: TERM ADJUSTMENT IN VIEW
Application No	: 11/487,886	: OF WYETH AND NOTICE OF INTENT TO
Filed	: 07/17/2006	: ISSUE CERTIFICATE OF CORRECTION
		:

The Request for Recalculation is **GRANTED** to the extent indicated.

The patent term adjustment has been determined to be **0** days. The USPTO will *sua sponte* issue a certificate of correction reflecting the amount of PTA days determined by the recalculation.

Prior to the issuance of the certificate of correction, the USPTO will afford patentee an opportunity to be heard and request reconsideration. Accordingly, patentee has **one month or thirty (30) days**, whichever is longer, to file a request for reconsideration of this patent term adjustment calculation. See 35 U.S.C. 154(b)(3)(B)(ii) and 37 CFR 1.322(a)(4). No extensions of time will be granted under 37 CFR 1.136.

Patentee should use document code PET.OP if electronically filing a request for reconsideration of this patent term adjustment calculation. The patentee must also include the information required by 37 CFR 1.705(b)(2) and the fee required by 37 CFR 1.18(e). If patentee does not file a timely request for reconsideration of this patent term adjustment calculation including the information required by 37 CFR 1.705(b)(2) and the fee required by 37 CFR 1.18(e), the USPTO will issue a certificate of correction reflecting the PTA determination noted above.

Patentee should be aware that in order to preserve the right to review in the United States District Court for the District of Columbia of the USPTO patent term adjustment determination, patentee must ensure that he or she also take the steps required under 35 U.S.C. 154(b)(4)(A) in a timely manner. Nothing in the request for recalculation should be construed as providing an alternative time frame for commencing a civil action under 35 U.S.C. 154(b)(4)(A).

Any questions concerning this decision should be directed to the Office of Patent Legal Administration at 571-272-7702.

UNITED STATES PATENT AND TRADEMARK OFFICE

SEP 18 2007

Commissioner for Patents
United States Patent and Trademark Office
P.O. Box 1450
Alexandria, VA 22313-1450

J.WENDY DAVIS, Ph.D
HOWREY LLP
1111 LOUISIANA, 25TH FLOOR
HOUSTON, TX 77002

In re Application of	:	
Baum et al	:	Decision on Petition
Serial No.: 11/487,921	:	
Filed : 17 July 2006	:	
Attorney Docket No.: 11792.0201.DIVUS03	:	

This letter is in response to the petition filed 10 September 2007 under 37 CFR 1.144 requesting reconsideration of the restriction requirement.

BACKGROUND

A review of the file record shows that claims 53-88 were subject to a five-way restriction requirement on 9 May 2006.

On 12 June 2007, applicants responded to the non-final action including an amendment that cancelled claims directed to Group I and II, claims 53-61. The amendment left claims 62-88 pending. Applicants elected Group III, claims 62-78, with traverse.

On 9 July 2007, the examiner issued a final Office action under *Ex parte Quayle*. Claims 62-78 were indicated as in condition for allowance except for a few formal matters. Claims 79-88 were objected to as being directed to a non-elected invention.

This petition was filed on 10 September 2007.

DISCUSSION

This petition and the file history have been considered carefully.

Upon review of the file, it is noted that the restriction requirement between Group III (subcombination) and Group IV (combination) was not warranted. While the examiner did provide additional utility for the subcombination, the examiner did not sufficiently establish that

the combination, as claimed, did not require all the particulars of the subcombination for patentability. As such, the claims directed to the transgenic plant of Group IV should have been examined with the elected invention of Group III.

The reason to establish distinction between Group III and Group V was also incorrect for failing to identify the relationship between Group V as a process of using the product of Group III. Distinction between Group III and Group V could have been correctly established by providing an additional use for the nucleic acid of Group III.

Moreover, even of the restriction requirement was correct, once the elected invention is in condition for allowance, the examiner should consider the withdrawn claims in terms of rejoinder. MPEP 821.04(a) provides guidance of rejoinder of product claims to an allowable product invention. MPEP 821.04(b) provides guidance of rejoinder of process claims to an allowable product invention.

The petition is correct in that rejoinder of the claims 79-87 directed to the transgenic plant and claim 88, directed to a method of using the product of allowable claim 62 is appropriate in this application because all the rejoined claims depend from or require all the limitations of the allowable elected invention.

DECISION

The request for withdrawal of finality of the Office action and issuance of a new Office action is **GRANTED**. The request for rejoinder of Group III, IV and V is **GRANTED**.

The restriction requirement between Group III, claims 62-78, directed to nucleic acid, vector and host cells, Group IV, claims 79-87 directed to a transgenic plant comprising the nucleic acid and Group V, claim 88 directed to a method of using the nucleic acid to make a transgenic plant is withdrawn.

The application will be forwarded to the examiner to prepare an Office action consistent with this decision.

Should there be any questions regarding this decision, please contact Quality Assurance Specialist/Program Manager Julie Burke, by mail addressed to Director, Technology Center 1600, PO BOX 1450, ALEXANDRIA, VA 22313-1450, or by telephone at (571) 272-1600 or by Official Fax at (571) 273-8300.

Bruce Kisliuk
Director, Technology Center 1600

UNITED STATES PATENT AND TRADEMARK OFFICE

Commissioner for Patents
United States Patent and Trademark Office
P.O. Box 1450
Alexandria, VA 22313-1450
www.uspto.gov

PATENT DEPT
INTUITIVE SURGICAL, INC
1266 KIFER RD
BUILDING 101
SUNNYVALE CA 94086

COPY MAILED

JUN 13 2007

OFFICE OF PETITIONS

In re Application of :
Wang et al. : DECISION ON PETITION
Application No. 11/487,943 :
Filed: July 17, 2006 :
Atty Docket No. 022001-844 :

This is a decision on the Petition under 37 CFR 1.182, filed September 15, 2006, requesting that the above-referenced application be accorded a filing date of July 17, 2006, with figures 27-39 considered part of the original application disclosure.

Application papers in the above-identified application were deposited on July 17, 2006. However, on August 7, 2006, the Office of Initial Patent Examination mailed a NOTICE TO FILE MISSING PARTS OF NONPROVISIONAL APPLICATION notifying the applicant that the application papers had been accorded a filing date; however, figures 27-39 described in the specification appeared to have been omitted.

The petition is dismissed.

In response, applicant filed the instant petition, asserting that the figures were omitted from the original application filing on July 17, 2006. Applicant cites 1.57, arguing that the omitted figures are present in Application No. 10/737,195 which this application as filed claims the priority benefit of.

The mailing of a "Notice of Omitted Items" permits the applicant to either: (1) promptly establish prior receipt in the PTO of the drawing(s) at issue (generally by way of a date-stamped postcard receipt (MPEP 503)), or (2) promptly submit the omitted drawing(s) in a nonprovisional application and accept the date of such submission as the application filing date. An applicant asserting that the missing drawings were in fact deposited in the PTO with the application papers must file a petition (and the appropriate petition fee) with evidence of such deposit. An applicant desiring to submit the omitted drawings in a nonprovisional application and accept the date of such submission as the application filing date must file any omitted drawing(s) with an oath or declaration in compliance with 37 CFR 1.63 and 1.64 referring to such drawing(s) and a petition under 37 CFR 1.182 (with the petition fee under 37 CFR 1.17(h)) requesting the later filing date within two months of the date of the "Notice of Omitted Items" (37 CFR 1.181(f)).

MPEP 201.06(c)(IV) states that:

> An applicant may incorporate by reference the prior application by including, in the application-as-filed, a statement that such specifically enumerated prior application or applications are "hereby incorporated herein by reference." The statement may appear in the specification or in the application transmittal letter. The inclusion of this incorporation by reference of the prior application(s) will permit an applicant to amend the continuing application to include any subject matter in such prior application(s), without the need for a petition. (emphasis supplied)
>
> For applications filed on or after September 21, 2004, a claim under 35 U.S.C. 120 and 37 CFR 1.78 for benefit of a prior-filed nonprovisional application or international application designating the U.S. that was present on the filing date of the continuation or divisional application is considered an incorporation by reference of the prior-filed application as to inadvertently omitted material, subject to the conditions and requirements of 37 CFR 1.57(a).

The omitted figures filed as a amendment under 37 CFR 1.57(a) on September 15, 2006 will be reviewed by the examiner for new matter.

This application is being returned to the Office of Initial Patent Examination (OIPE) for completeness of pre-examination processing with a filing date of July 17, 2006, including an indication in Office records that figures 1-26 were present on filing.

Telephone inquiries concerning this matter may be directed to Charlema R. Grant at (571) 272-3215.

Charles A. Pearson
Director
Office of Petitions

UNITED STATES PATENT AND TRADEMARK OFFICE

UNITED STATES DEPARTMENT OF COMMERCE
United States Patent and Trademark Office
Address: COMMISSIONER FOR PATENTS
P.O. Box 1450
Alexandria, Virginia 22313-1450
www.uspto.gov

FAEGRE & BENSON LLP
PATENT DOCKETING - INTELLECTUAL PROPERTY
2200 WELLS FARGO CENTER
90 SOUTH SEVENTH STREET
MINNEAPOLIS, MN 55402-3901

Mail Date: 04/20/2010

Applicant	: Aaron J. Hjelle	: DECISION ON REQUEST FOR
Patent Number	: 7651462	: RECALCULATION of PATENT
Issue Date	: 01/26/2010	: TERM ADJUSTMENT IN VIEW
Appliction No	: 11/487,953	: OF WYETH AND NOTICE OF INTENT TO
Filed	: 07/17/2006	: ISSUE CERTIFICATE OF CORRECTION
		:

The Request for Recalculation is **GRANTED** to the extent indicated.

The patent term adjustment has been determined to be **355** days. The USPTO will *sua sponte* issue a certificate of correction reflecting the amount of PTA days determined by the recalculation.

Prior to the issuance of the certificate of correction, the USPTO will afford patentee an opportunity to be heard and request reconsideration. Accordingly, patentee has **one month or thirty (30) days**, whichever is longer, to file a request for reconsideration of this patent term adjustment calculation. See 35 U.S.C. 154(b)(3)(B)(ii) and 37 CFR 1.322(a)(4). No extensions of time will be granted under 37 CFR 1.136.

Patentee should use document code PET.OP if electronically filing a request for reconsideration of this patent term adjustment calculation. The patentee must also include the information required by 37 CFR 1.705(b)(2) and the fee required by 37 CFR 1.18(e). If patentee does not file a timely request for reconsideration of this patent term adjustment calculation including the information required by 37 CFR 1.705(b)(2) and the fee required by 37 CFR 1.18(e), the USPTO will issue a certificate of correction reflecting the PTA determination noted above.

Patentee should be aware that in order to preserve the right to review in the United States District Court for the District of Columbia of the USPTO patent term adjustment determination, patentee must ensure that he or she also take the steps required under 35 U.S.C. 154(b)(4)(A) in a timely manner. Nothing in the request for recalculation should be construed as providing an alternative time frame for commencing a civil action under 35 U.S.C. 154(b)(4)(A).

Any questions concerning this decision should be directed to the Office of Patent Legal Administration at 571-272-7702.

UNITED STATES PATENT AND TRADEMARK OFFICE

UNITED STATES DEPARTMENT OF COMMERCE
United States Patent and Trademark Office
Address: COMMISSIONER FOR PATENTS
P.O. Box 1450
Alexandria, Virginia 22313-1450
www.uspto.gov

FAEGRE & BENSON LLP
PATENT DOCKETING - INTELLECTUAL PROPERTY
2200 WELLS FARGO CENTER
90 SOUTH SEVENTH STREET
MINNEAPOLIS, MN 55402-3901

Mail Date: 05/17/2010

Applicant : Aaron J. Hjelle
Patent Number : 7651462
Issue Date : 01/26/2010
Application No: 11/487,953
Filed : 07/17/2006

: NOTICE CONCERNING IMPROPER
: CALCULATION OF PATENT TERM
: ADJUSTMENT BASED UPON USPTO
: IMPROPERLY MEASURING REDUCTION
: PERIOD UNDER 37 CFR 1.704(c)(10).

The United States Patent and Trademark Office (USPTO) discovered that in processing the recent recalculation decisions mailed in response to patentee's filed Request for Recalculation of Patent Term Adjustment in view of Wyeth, the USPTO improperly measured the reduction period for reductions under 37 CFR 1.704(c)(10). Pursuant to 37 CFR 1.704(c)(10), patentee's reduction begins on the date of filing the amendment under 37 CFR 1.312 ("1.312 amendment") or other related paper and ends on the date that the Office mails a response to the filing of the 1.312 amendment or other paper. It has been discovered that during the recalculation, the calculation failed to the limit the reduction to the mail date of the response to the 1.312 amendment or other paper. Accordingly, patentee's reductions were greater than warranted.

This notice **VACATES** the previous GRANTED request for recalculation and provides patentee with a revised GRANTED recalculation.

The patent term adjustment has been determined to be **460** days. The USPTO will *sua sponte* issue a certificate of correction reflecting the amount of patent term adjustment (PTA) days determined by the recalculation.

Prior to the issuance of the certificate of correction, the USPTO will afford patentee an opportunity to be heard and request reconsideration. Accordingly, patentee has **one month or thirty (30) days** from the mail date of this notice, whichever is longer, to file a request for reconsideration of this PTA calculation. See 35 U.S.C. § 154(b)(3)(B)(ii) and 37 CFR 1.322(a)(4).

Patentee should use document code PET.OP if electronically filing a request for reconsideration of this PTA calculation. The patentee must also include the information required by 37 CFR 1.705(b)(2), and the fee required by 37 CFR 1.18(e). If patentee does not file a timely request for reconsideration of this PTA calculation, including the information required by 37 CFR 1.705(b)(2) and the fee required by 37 CFR 1.18(e), the USPTO will issue a certificate of correction reflecting the PTA determination noted above.

Patentee should be aware that in order to preserve the right of review of the USPTO's PTA determination in the United States District Court for the District of Columbia, patentee must ensure that the steps required under 35 U.S.C. § 154 (b)(4) are taken in a timely manner. Nothing in the request for recalculation should be construed as providing an alternative time frame for commencing a civil action under 35 U.S.C. § 154(b)(4).

UNITED STATES PATENT AND TRADEMARK OFFICE

Commissioner for Patents
United States Patent and Trademark Office
P.O. Box 1450
Alexandria, VA 22313-1450
www.uspto.gov

HOWREY LLP - DC
C/O IP DOCKETING DEPARTMENT
2941 FAIRVIEW PARK DR, SUITE 200
FALLS CHURCH, VA 22042-2924

COPY MAILED

DEC 0 2 2008

OFFICE OF PETITIONS

In re Application of :
Mark Wayne Adams, et. al. :
Application No. 11/487,975 : ON PETITION
Filed: July 18, 2006 :
Attorney Docket No. 02719.0093.NPUS00 :

This is a decision on the petition under 37 CFR 1.137(b), on October 15, 2008, to revive the above-identified application.

The instant petition is not signed by an attorney of record. However, in accordance with 37 CFR 1.34(a), the signature of Nikitas E. Nicolakis appearing on the petition shall constitute a representation to the United States Patent and Trademark Office that he/she is authorized to represent the particular party on whose behalf he/she acts.

The application became abandoned for failure to timely respond to the Restriction/Election Requirement mailed July 12, 2007. A Notice of Abandonment was mailed on February 20, 2008.

The petition satisfies the requirements of 37 CFR 1.137(b) in that petitioner has supplied (1) an election; (2) the petition fee of $1,620; and (3) a proper statement of unintentional delay. Therefore, the petition is **GRANTED**.

The correspondence titled Change of Attorney Docket Number and Correspondence Address filed on October 15, 2008 has not been accepted. If Nikitas E. Nicolakis desires to receive future correspondence regarding this application, the appropriate power of attorney or authorization of agent must be submitted. A courtesy copy of this decision is being mailed to petitioner. Nevertheless, all future correspondence regarding this application file will be directed solely to the address of record until otherwise instructed.

This application file is being referred to Technology Center Art Unit 3711, for examination in the normal course of business on the response received October 15, 2008.

Telephone inquiries concerning this decision should be directed to the undersigned at (571) 272-3226.

Andrea Smith
Petitions Examiner
Office of Petitions

cc: Nikitas E. Nicolakis
Dreier, LLP
499 Park Avenue
New York, NY 10022

UNITED STATES PATENT AND TRADEMARK OFFICE

COMMISSIONER FOR PATENTS
UNITED STATES PATENT AND TRADEMARK OFFICE
P.O. BOX 1450
ALEXANDRIA, VA 22313-1450
www.uspto.gov

SUGHRUE MION, PLLC
2100 PENNSYLVANIA AVENUE, N.W.
SUITE 800
WASHINGTON DC 20037

MAILED

MAY 20 2009

OFFICE OF PETITIONS

Applicant: Egashira, et al.
Appl. No.: 11/488,042
Filing Date: July 18, 2006
Title: GOLF BALL MATERIAL, GOLF BALL AND METHOD FOR PREPARING GOLF BALL MATERIAL
Attorney Docket No.: Q96081
Pub. No.: US 2008/0021161 A1
Pub. Date: January 24, 2008

This is a decision on the request for a corrected patent application publication under 37 CFR 1.221(b), received on November 20, 2008 for the above-identified application.

The request is DISMISSED.

Applicant requests that the application be republished because the patent application publication contains a material error in wherein the assignee data is incorrect.

37 CFR 1.221 (b) is applicable "only when the Office makes a material mistake which is apparent from Office records.... Any request for a corrected publication or revised patent application publication other than provided as provided in paragraph (a) of this section must be filed within **two months** from the date of the patent application publication. **This period is not extendable**." A material mistake must affect the public's ability to appreciate the technical disclosure of the patent application publication, to determine the scope of the patent application publication, or to determine the scope of the provisional rights that an applicant may seek to enforce upon issuance of a patent. [1]

The request made by applicant on November 24, 2008 is not timely filed.

The error in the assignee's name on the front page of the publication is not a material mistake as required by 37 CFR 1.221(b). The application was correctly published with the assignment information provided on the transmittal letter and/or application data sheet received on July 18, 2006.[2] The error in the assignee's name on the front page of the publication is because the transmittal letter listed the assignee as "Bridgestone Corporation.

---

[1] Changes to Implement Eighteen-Month Publication of Patent Applications, 65 FR 57023, 57038 (Sept. 20, 2000), 1239, Off. Gaz. Pat. Office Notices 63, 75 (Oct. 10, 2000) (final rule).

[2] See Comment 59, Changes to Implement Eighteen-Month Publication of Patent Applications, 65 FR 57023, 57047 (Sept. 20, 2000), 1239 Off. Gaz. Pat. Office Notices 63, 84 (Oct. 10, 2000) (final rule).

Furthermore, the failure to include the correct assignee on the front page of the published patent application would not be a material mistake because it does not affect the public's ability to appreciate the technical disclosure of the patent application publication, to determine the scope of the patent application publication or to determine the scope of the provisional rights that an applicant may seek to enforce upon issuance of a patent. See MPEP 1130.

Applicant is reminded of his duty to conduct a reasonable inquiry before filing a paper before the Office. See MPEP 410.

Applicants' request for a corrected patent application publication on November 20, 2008, may constitute a "failure to engage in reasonable efforts to conclude processing or examination of the application." See 1.704(c). This determination will be made on or after a mailing of a Notice of Allowance.

Applicants are advised that a "request for republication of an application previously published" may be filed under 37 CFR 1.221(a). Such a request for republication "must include a copy of the application in compliance with the Office electronic filing system requirements and be accompanied by the publication fee set forth in § 1.18(d) and the processing fee set forth in § 1.17(i)." If the request for republication does not comply with the electronic filing system requirements, the republication will not take place and the publication fee set forth in § 1.18(d) will be refunded. The processing fee will be retained.

A guide for filing a request for a Pre-Grant Publication, such as a request for republication, may be found on the link below:

http://www.uspto.gov/ebc/portal/tutorials.htm

Any request for republication under 37 CFR 1.221(a) must be submitted via the EFS system as a "Pre-Grant Publication" and any questions or request for reconsideration of the decision should be addressed as follows:

By mail to: Mail Stop PGPUB
Commissioner for Patents
P.O. Box 1450
Alexandria, Va. 22313-1450

Inquiries relating to this matter may be directed to Mark Polutta at (571) 272-7709.

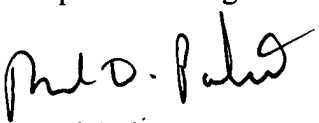

Mark Polutta
Senior Legal Advisor
Office of Patent Legal Administration
Office of the Deputy Commissioner
for Patent Examination Policy

UNITED STATES PATENT AND TRADEMARK OFFICE

UNITED STATES DEPARTMENT OF COMMERCE
United States Patent and Trademark Office
Address: COMMISSIONER FOR PATENTS
P.O. Box 1450
Alexandria, Virginia 22313-1450
www.uspto.gov

STEPTOE & JOHNSON LLP
1330 CONNECTICUT AVE., NW
WASHINGTON, DC 20036

Mail Date: 04/21/2010

Applicant	: Toshiyuki Fukuda	: DECISION ON REQUEST FOR
Patent Number	: 7595540	: RECALCULATION of PATENT
Issue Date	: 09/29/2009	: TERM ADJUSTMENT IN VIEW
Appliction No	: 11/488,062	: OF WYETH AND NOTICE OF INTENT TO
Filed	: 07/18/2006	: ISSUE CERTIFICATE OF CORRECTION
		:

The Request for Recalculation is **GRANTED** to the extent indicated.

The patent term adjustment has been determined to be **569** days. The USPTO will *sua sponte* issue a certificate of correction reflecting the amount of PTA days determined by the recalculation.

Prior to the issuance of the certificate of correction, the USPTO will afford patentee an opportunity to be heard and request reconsideration. Accordingly, patentee has **one month or thirty (30) days**, whichever is longer, to file a request for reconsideration of this patent term adjustment calculation. See 35 U.S.C. 154(b)(3)(B)(ii) and 37 CFR 1.322(a)(4). No extensions of time will be granted under 37 CFR 1.136.

Patentee should use document code PET.OP if electronically filing a request for reconsideration of this patent term adjustment calculation. The patentee must also include the information required by 37 CFR 1.705(b)(2) and the fee required by 37 CFR 1.18(e). If patentee does not file a timely request for reconsideration of this patent term adjustment calculation including the information required by 37 CFR 1.705(b)(2) and the fee required by 37 CFR 1.18(e), the USPTO will issue a certificate of correction reflecting the PTA determination noted above.

Patentee should be aware that in order to preserve the right to review in the United States District Court for the District of Columbia of the USPTO patent term adjustment determination, patentee must ensure that he or she also take the steps required under 35 U.S.C. 154(b)(4)(A) in a timely manner. Nothing in the request for recalculation should be construed as providing an alternative time frame for commencing a civil action under 35 U.S.C. 154(b)(4)(A).

Any questions concerning this decision should be directed to the Office of Patent Legal Administration at 571-272-7702.

UNITED STATES PATENT AND TRADEMARK OFFICE

UNITED STATES DEPARTMENT OF COMMERCE
United States Patent and Trademark Office
Address: COMMISSIONER FOR PATENTS
P.O. Box 1450
Alexandria, Virginia 22313-1450
www.uspto.gov

STITES & HARBISON PLLC
1199 NORTH FAIRFAX STREET
SUITE 900
ALEXANDRIA, VA 22314

Mail Date: 04/21/2010

Applicant	: Marie-Emmanuelle Le Guern	: DECISION ON REQUEST FOR
Patent Number	: 7569565	: RECALCULATION of PATENT
Issue Date	: 08/04/2009	: TERM ADJUSTMENT IN VIEW
Appliction No	: 11/488,068	: OF WYETH AND NOTICE OF INTENT TO
Filed	: 07/18/2006	: ISSUE CERTIFICATE OF CORRECTION
		:

The Request for Recalculation is **GRANTED** to the extent indicated.

The patent term adjustment has been determined to be **145** days. The USPTO will *sua sponte* issue a certificate of correction reflecting the amount of PTA days determined by the recalculation.

Prior to the issuance of the certificate of correction, the USPTO will afford patentee an opportunity to be heard and request reconsideration. Accordingly, patentee has **one month or thirty (30) days**, whichever is longer, to file a request for reconsideration of this patent term adjustment calculation. See 35 U.S.C. 154(b)(3)(B)(ii) and 37 CFR 1.322(a)(4). No extensions of time will be granted under 37 CFR 1.136.

Patentee should use document code PET.OP if electronically filing a request for reconsideration of this patent term adjustment calculation. The patentee must also include the information required by 37 CFR 1.705(b)(2) and the fee required by 37 CFR 1.18(e). If patentee does not file a timely request for reconsideration of this patent term adjustment calculation including the information required by 37 CFR 1.705(b)(2) and the fee required by 37 CFR 1.18(e), the USPTO will issue a certificate of correction reflecting the PTA determination noted above.

Patentee should be aware that in order to preserve the right to review in the United States District Court for the District of Columbia of the USPTO patent term adjustment determination, patentee must ensure that he or she also take the steps required under 35 U.S.C. 154(b)(4)(A) in a timely manner. Nothing in the request for recalculation should be construed as providing an alternative time frame for commencing a civil action under 35 U.S.C. 154(b)(4)(A).

Any questions concerning this decision should be directed to the Office of Patent Legal Administration at 571-272-7702.

UNITED STATES PATENT AND TRADEMARK OFFICE

UNITED STATES DEPARTMENT OF COMMERCE
United States Patent and Trademark Office
Address: COMMISSIONER FOR PATENTS
P.O. Box 1450
Alexandria, Virginia 22313-1450
www.uspto.gov

DICKSTEIN SHAPIRO LLP
1825 EYE STREET, NW
WASHINGTON, DC 20006

Mail Date: 04/27/2010

Applicant	: Xiangli Li	: DECISION ON REQUEST FOR
Patent Number	: 7619671	: RECALCULATION of PATENT
Issue Date	: 11/17/2009	: TERM ADJUSTMENT IN VIEW
Application No	: 11/488,110	: OF WYETH AND NOTICE OF INTENT TO
Filed	: 07/18/2006	: ISSUE CERTIFICATE OF CORRECTION
		:

The Request for Recalculation is **GRANTED** to the extent indicated.

The patent term adjustment has been determined to be **608** days. The USPTO will *sua sponte* issue a certificate of correction reflecting the amount of PTA days determined by the recalculation.

Prior to the issuance of the certificate of correction, the USPTO will afford patentee an opportunity to be heard and request reconsideration. Accordingly, patentee has **one month or thirty (30) days**, whichever is longer, to file a request for reconsideration of this patent term adjustment calculation. See 35 U.S.C. 154(b)(3)(B)(ii) and 37 CFR 1.322(a)(4). No extensions of time will be granted under 37 CFR 1.136.

Patentee should use document code PET.OP if electronically filing a request for reconsideration of this patent term adjustment calculation. The patentee must also include the information required by 37 CFR 1.705(b)(2) and the fee required by 37 CFR 1.18(e). If patentee does not file a timely request for reconsideration of this patent term adjustment calculation including the information required by 37 CFR 1.705(b)(2) and the fee required by 37 CFR 1.18(e), the USPTO will issue a certificate of correction reflecting the PTA determination noted above.

Patentee should be aware that in order to preserve the right to review in the United States District Court for the District of Columbia of the USPTO patent term adjustment determination, patentee must ensure that he or she also take the steps required under 35 U.S.C. 154(b)(4)(A) in a timely manner. Nothing in the request for recalculation should be construed as providing an alternative time frame for commencing a civil action under 35 U.S.C. 154(b)(4)(A).

Any questions concerning this decision should be directed to the Office of Patent Legal Administration at 571-272-7702.

UNITED STATES PATENT AND TRADEMARK OFFICE

COMMISSIONER FOR PATENTS
UNITED STATES PATENT AND TRADEMARK OFFICE
P.O. BOX 1450
ALEXANDRIA, VA 22313-1450
www.uspto.gov

OBLON, SPIVAK, MCCLELLAND, MAIER & NEUSTADT, P.C.
1940 DUKE STREET
ALEXANDRIA VA 22314

COPY MAILED
MAR 20 2007
OFFICE OF PETITIONS

In re Application of :
Arimoto, et al. :
Application No.: 11/488,122 : DECISION
Filed: July 18, 2006 :
Docket No.: 293304US0X CIP :
For: GAS-BARRIER RESIN :
COMPOSITION :

This decision is in response to the petition under 37 CFR 1.47, filed January 8, 2006.

The petition is hereby **DISMISSED**.

Petitioners allege that the instant application is a continuation in part of 11/184,504 and that said application was accorded Rule 47 status.

In accordance with 37 CFR 1.63(d)(3), where the executed oath or declaration of which a copy is submitted for a continuation or divisional application was originally filed in a prior application accorded status under § 1.47, the copy of the executed oath or declaration for such prior application must be accompanied by: (i) A copy of the decision granting a petition to accord § 1.47 status to the prior application, unless all inventors or legal representatives have filed an oath or declaration to join in an application accorded status under § 1.47 of which the continuation or divisional application claims a benefit under 35 U.S.C. 120, 121, or 365(c); and (ii) If one or more inventor(s) or legal representative(s) who refused to join in the prior application or could not be found or reached has subsequently joined in the prior application or another application of which the continuation or divisional application claims a benefit under 35 U.S.C. 120, 121, or 365(c), a copy of the subsequently executed oath(s) or declaration(s) filed by the inventor or legal representative to join in the application.

The instant petition fails to comply with the requirements of 37 CFR 1.63(d)(3)(i).

Petitioners are given TWO MONTHS from the mailing date of this decision to reply, correcting the below-noted deficiencies. Any reply should be entitled "Request for Reconsideration of Petition Under 37 CFR 1.47(a)," and should only address the deficiencies noted herein. The reply under 37 CFR 1.47(a) may include an oath or declaration executed by the non-signing inventors. Any extensions of time will be governed by 37 CFR 1.136(a).

Further correspondence with respect to this matter should be addressed as follows:

By mail:	Mail Stop Petition Commissioner for Patents P.O. Box 1450 Alexandria, VA 22313-1450
By facsimile:	(571) 273-8300
By hand:	U.S. U.S. Patent and Trademark Office Customer Service Window Mail Stop Petition Randolph Building 401 Delaney Street Alexandria, VA 22314

Telephone inquiries regarding this matter should be directed to the undersigned at (571) 272-3205.

Alesia M. Brown
Petitions Attorney
Office of Petitions

UNITED STATES PATENT AND TRADEMARK OFFICE

COMMISSIONER FOR PATENTS
UNITED STATES PATENT AND TRADEMARK OFFICE
P.O. BOX 1450
ALEXANDRIA, VA 22313-1450
www.uspto.gov

OBLON, SPIVAK, MCCLELLAND, MAIER & NEUSTADT, P.C.
1940 DUKE STREET
ALEXANDRIA VA 22314

COPY MAILED

JUN 21 2007

OFFICE OF PETITIONS

In re Application of :
Arimoto, et al. :
Application No.: 11/488,122 : DECISION
Filed: July 18, 2006 :
Docket No.: 293304US0X CIP :
For: GAS-BARRIER RESIN :
COMPOSITION :

This decision is in response to the renewed petition under 37 CFR 1.47, filed April 10, 2007.

The petition is hereby **GRANTED**.

A review of the official application file reveals that the instant application is a continuation in part of 11/184,504 and that said application was accorded Rule 47 status.

In accordance with 37 CFR 1.63(d)(3), where the executed oath or declaration of which a copy is submitted for a continuation or divisional application was originally filed in a prior application accorded status under § 1.47, the copy of the executed oath or declaration for such prior application must be accompanied by: (i) A copy of the decision granting a petition to accord § 1.47 status to the prior application, unless all inventors or legal representatives have filed an oath or declaration to join in an application accorded status under § 1.47 of which the continuation or divisional application claims a benefit under 35 U.S.C. 120, 121, or 365(c); and (ii) If one or more inventor(s) or legal representative(s) who refused to join in the prior application or could not be found or reached has subsequently joined in the prior application or another application of which the continuation or divisional application claims a benefit under 35 U.S.C. 120, 121, or 365(c), a copy of the subsequently executed oath(s) or declaration(s) filed by the inventor or legal representative to join in the application.

A copy of the declaration and decision according Rule 47 status in application No. 11/184,504 have been placed in the official application file of the instant application.

As Rule 1.47(a) status was granted in the prior application, this application is hereby accorded Rule 1.47(a) status.

As provided in Rule 1.47(c), since notice was provided after the grant of Rule 1.47(a) status in the prior application, the Office is dispensing with the notice provision in this continuation application.

This application is being returned to the Office of Initial Patent Examination for further processing.

Telephone inquiries regarding this matter should be directed to the undersigned at (571) 272-3205.

Alesia M. Brown
Petitions Attorney
Office of Petitions

UNITED STATES PATENT AND TRADEMARK OFFICE

Commissioner for Patents
United States Patent and Trademark Office
P.O. Box 1450
Alexandria, VA 22313-1450
www.uspto.gov

NEIFELD IP LAW, PC
4813-B EISENHOWER AVENUE
ALEXANDRIA VA 22304

MAILED

MAR 2 9 2010

OFFICE OF PETITIONS

In re Application :
Baxter Byerly et al. :
Application No. 11/488,126 : DECISION ON APPLICATION
Filed: July 18, 2006 : FOR PATENT TERM ADJUSTMENT
Attorney Docket No. **PIP 175MOUNU-US** :

This is in response to the 37 CFR 1.705 APPLICATION FOR PATENT TERM ADJUSTMENT filed January 15, 2010. Applicant requests that the determination of patent term adjustment be corrected from 231 days to 381 days. Applicant requests this correction in part on the basis that the Office will take in excess of three years to issue this patent and in light of the recent court decision in Wyeth v. Dudas, No. 07-1492 (D.D.C. September 30, 2008).

As the instant application for patent term adjustment requests reconsideration of the patent term adjustment as it relates to the Office's failure to issue the patent within three years of the filing date, the application for patent term adjustment under 37 CFR 1.705(b) is **DISMISSED as PREMATURE**.

Knowledge of the actual date the patent issues is required to calculate the amount, if any, of additional patent term patentees are entitled to for Office failure to issue the patent within three years. See 37 CFR 1.702(b). (This is true even where a request for continued examination (RCE) was filed). The computer will not undertake the § 1.702(b) calculation until the actual date of issuance of the patent has been determined. Likewise, the computer will not calculate any further Office delay under 37 CFR 1.702(a)(4) or applicant delay under 37 CFR 1.704(c)(10) until the actual date of issuance of the patent has been determined. As such, the Office cannot make a determination on the patent term adjustment relating to those provisions until the patent has issued.

Requesting reconsideration of the patent term adjustment to be indicated on the patent under 37 CFR 1.705(b) based on the initial determination of patent term adjustment and a projected issuance date of the patent (or even the filing date of the request for

continued examination) is premature. Accordingly, it is appropriate to dismiss such a request as premature.

Rather than file an application for patent term adjustment under 37 CFR 1.705(b) contesting the 37 CFR 1.702(b) calculation at the time of the mailing of the notice of allowance, applicants are advised that they may wait until the time of the issuance of the patent and file a request for reconsideration of the patent term adjustment pursuant to 37 CFR 1.705(d). As the USPTO does not calculate the amount of time earned pursuant to 37 CFR 1.702(b) until the time of the issuance of the patent, the Office will consider any request for reconsideration of the patent term adjustment due to an error in the calculation of 37 CFR 1.702(b) to be timely if the request for reconsideration is filed within two months of the issuance of the patent. However, as to all other bases for contesting the initial determination of patent term adjustment received with the notice of allowance, applicants must timely file an application for patent term adjustment prior to the payment of the issue fee.[1]

The Office acknowledges submission of the $200.00 fee set forth in 37 CFR 1.18(e) for consideration of the application for patent term adjustment under 37 CFR 1.705(b).

Any request for reconsideration of the patent term adjustment indicated on the patent must be timely filed within two months after issuance pursuant to 37 CFR 1.705(d) and must include payment of the required fee under 37 CFR 1.18(e).

The Office of Data Management has been advised of this decision. This application is being referred to the Office of Data Management for issuance of the patent.

Telephone inquiries specific to this decision should be directed to Senior Petitions Attorney Patricia Faison-Ball at (571) 272-3212.

/Kery A. Fries/

Kery A. Fries
Senior Legal Advisor
Office of Patent Legal Administration
Office of Deputy Commissioner
for Examination Policy

[1] For example, if applicants dispute both the calculation of patent term adjustment under 37 CFR 1.702(a)(1) for Office failure to mail a first Office action or notice of allowance not later than fourteen months after the date on which the application was filed, and under 37 CFR 1.702(b) for Office failure to issue a patent within three years of the actual filing date of the application, then applicants must still timely file an application for patent term adjustment prior to the payment of the issue fee to contest the calculation of Office delay in issuing a first Office action or notice of allowance. See 37 CFR 1.705(b) and 35 U.S.C. 154(b)(3)(B). A dispute as to the calculation of the § 1.702(a)(1) period raised on request for reconsideration of patent term adjustment under 37 CFR 1.705(d) will be dismissed as untimely filed.

UNITED STATES PATENT AND TRADEMARK OFFICE

UNITED STATES DEPARTMENT OF COMMERCE
United States Patent and Trademark Office
Address: COMMISSIONER FOR PATENTS
P.O. Box 1450
Alexandria, Virginia 22313-1450
www.uspto.gov

NEIFELD IP LAW, PC
4813-B EISENHOWER AVENUE
ALEXANDRIA, VA 22304

Mail Date: 06/02/2010

Applicant	: Baxter Byerly	: DECISION ON REQUEST FOR
Patent Number	: 7708360	: RECALCULATION of PATENT
Issue Date	: 05/04/2010	: TERM ADJUSTMENT IN VIEW
Application No	: 11/488,126	: OF WYETH
Filed	: 07/18/2006	:
		:

The Patentee's Request for Recalculation is **DISMISSED.**

This Request is deemed ineligible for consideration for one or more of the following reasons:

(A). The patent for which PTA recalculation is requested is either a design or reissue application or is a reexamination proceeding;

(B). The patent for which PTA recalculation is requested resulted from a utility or plant application filed under 35 USC 111(a) before May 29, 2000 and no CPA filed in the application on/after May 29, 2000;

(C). The patent for which PTA recalculation is requested resulted from an international application in which the international filing date was before May 29, 2000 and no CPA filed in the application on/after May 29, 2000;

(D). The patent for which PTA recalculation is requested issued on/after March 2, 2010;

(E). The Request for Recalculation was filed more than 180 days after the grant date of the patent and the request was not filed within two months of a dismissal of a request for reconsideration of the of the patent term under 37 CFR 1.705(d);

(F). The Request for Recalculation is not solely limited to USPTO pre-Wyeth interpretation of 35 U.S.C. 154(b)(2)(A);

or

(G). A civil action was filed pursuant to 35 U.S.C. 154(b)(4)(A)concerning the same patent at issue in this request.

Patentee may file a reply to this decision dismissing the Request for Recalculation. Patentee must file such reply within one month or thirty days, whichever is longer, of the mail date of the decision dismissing the Request for Recalculation. No fee is required if patentee is asserting in the reply that the dismissal for ineligibility is improper.

Patentee should use document code PET.OP if electronically filing a reply to this dismissal. If the USPTO finds that the request was improperly deemed ineligible, the USPTO will mail applicant a recalculation determination.

Patentee should be aware that in order to preserve the right to review in the United States District Court for the District of Columbia of the USPTO patent term adjustment determination, patentee must ensure that he or she also take the steps required under 35 U.S.C. 154(b)(4)(A). Nothing in the request for recalculation should be construed as providing an alternative time frame for commencing a civil action under 35 U.S.C. 154 (b)(4)(A).

Any questions concerning this decision should be directed to the Office of Patent Legal Administration at 571-272-7702.

UNITED STATES PATENT AND TRADEMARK OFFICE

Commissioner for Patents
United States Patent and Trademark Office
P.O. Box 1450
Alexandria, VA 22313-1450
www.uspto.gov

POSZ LAW GROUP, PLC
12040 SOUTH LAKES DRIVE
SUITE 101
RESTON VA 20191

COPY MAILED

AUG 0 4 2008

In re Application of	:	
Takahiko Yoshida et al	:	
Application No. 11/488,140	:	DECISION GRANTING PETITION
Filed: July 18, 2006	:	UNDER 37 CFR 1.313(c)(2)
Attorney Docket No. 01-1223	:	

This is a decision on the petition under 37 CFR 1.313(c)(2), filed August 4, 2008, to withdraw the above-identified application from issue after payment of the issue fee.

The petition is **GRANTED**.

The above-identified application is withdrawn from issue for consideration of a submission under 37 CFR 1.114 (request for continued examination). *See* 37 CFR 1.313(c)(2).

Petitioner is advised that the issue fee paid on August 4, 2008 cannot be refunded. If, however, this application is again allowed, petitioner may request that it be applied towards the issue fee required by the new Notice of Allowance.[1]

Telephone inquiries should be directed to the undersigned at (571) 272-3208.

This application is being referred to Technology Center AU 2856 for processing of the request for continued examination under 37 CFR 1.114 and for consideration of the concurrently filed IDS.

Karen Creasy
Petitions Examiner
Office of Petitions

[1] *The request to apply the issue fee to the new Notice may be satisfied by completing and returning the new Part B – Fee(s) Transmittal Form (along with any balance due at the time of submission). Petitioner is advised that the Issue Fee Transmittal Form must be completed and timely submitted to avoid abandonment of the application.*

UNITED STATES PATENT AND TRADEMARK OFFICE

Commissioner for Patents
United States Patent and Trademark Office
P.O. Box 1450
Alexandria, VA 22313-1450
www.uspto.gov

PEARL COHEN ZEDEK LATZER, LLP
1500 BROADWAY
12TH FLOOR
NEW YORK, NY 10036

MAILED

JUL 28 2010

OFFICE OF PETITIONS

In re Application of.	:	
Ben-David et al.	:	
Application No. 11/488,141	:	ON PETITION
Filed: July 18, 2006	:	
Attorney Docket No. P-4177-US1	:	

This is a notice regarding your request for acceptance of a fee deficiency submission under 37 CFR 1.28.

The Office no longer investigates or rejects original or reissue patent under 37 CFR 1.56. **1098 Off. Gaz. Pat. Office 502 (January 3, 1989)**. Therefore, nothing in this Notice is intended to imply that an investigation was done.

Your fee deficiency submission under 37 CFR 1.28 is hereby **ACCEPTED**.

This patent is no longer entitled to small entity status. Accordingly, all future fees paid in this patent must be paid at the large entity rate.

Inquiries related to this communication should be directed to the undersigned at (571) 272-6059.

A. Kelley

Alicia Kelley
Petitions Examiner
Office of Petitions

UNITED STATES PATENT AND TRADEMARK OFFICE

UNITED STATES DEPARTMENT OF COMMERCE
United States Patent and Trademark Office
Address: COMMISSIONER FOR PATENTS
P.O. Box 1450
Alexandria, Virginia 22313-1450
www.uspto.gov

MH2 TECHNOLOGY LAW GROUP, LLP
1951 KIDWELL DRIVE
SUITE 550
TYSONS CORNER, VA 22182

Mail Date: 04/20/2010

Applicant	: Dimitrios Anagnostou	: DECISION ON REQUEST FOR
Patent Number	: 7589674	: RECALCULATION of PATENT
Issue Date	: 09/15/2009	: TERM ADJUSTMENT IN VIEW
Appliction No	: 11/488,142	: OF WYETH AND NOTICE OF INTENT TO
Filed	: 07/18/2006	: ISSUE CERTIFICATE OF CORRECTION
		:

The Request for Recalculation is **GRANTED** to the extent indicated.

The patent term adjustment has been determined to be **520** days. The USPTO will *sua sponte* issue a certificate of correction reflecting the amount of PTA days determined by the recalculation.

Prior to the issuance of the certificate of correction, the USPTO will afford patentee an opportunity to be heard and request reconsideration. Accordingly, patentee has **one month or thirty (30) days**, whichever is longer, to file a request for reconsideration of this patent term adjustment calculation. See 35 U.S.C. 154(b)(3)(B)(ii) and 37 CFR 1.322(a)(4). No extensions of time will be granted under 37 CFR 1.136.

Patentee should use document code PET.OP if electronically filing a request for reconsideration of this patent term adjustment calculation. The patentee must also include the information required by 37 CFR 1.705(b)(2) and the fee required by 37 CFR 1.18(e). If patentee does not file a timely request for reconsideration of this patent term adjustment calculation including the information required by 37 CFR 1.705(b)(2) and the fee required by 37 CFR 1.18(e), the USPTO will issue a certificate of correction reflecting the PTA determination noted above.

Patentee should be aware that in order to preserve the right to review in the United States District Court for the District of Columbia of the USPTO patent term adjustment determination, patentee must ensure that he or she also take the steps required under 35 U.S.C. 154(b)(4)(A) in a timely manner. Nothing in the request for recalculation should be construed as providing an alternative time frame for commencing a civil action under 35 U.S.C. 154(b)(4)(A).

Any questions concerning this decision should be directed to the Office of Patent Legal Administration at 571-272-7702.

UNITED STATES PATENT AND TRADEMARK OFFICE

Commissioner for Patents
United States Patent and Trademark Office
P.O. Box 1450
Alexandria, VA 22313-1450
www.uspto.gov

MAILED Paper No.

APR 27 2010

OFFICE OF PETITIONS

MH2 TECHNOLOGY LAW GROUP, LLP
1951 KIDWELL DRIVE
SUITE 550
TYSONS CORNER VA 22182

In re Application of	:	
Anagnostou et al.	:	
Application No. 11/488,142	:	
In re Patent No. 7,589,674	:	DECISION ON PETITION
Filing Date: July 18, 2006	:	PURSUANT TO 37 C.F.R.
Issue Date: September 15, 2009	:	§ 3.81(B)
Attorney Docket Number:	:	
0023.0030	:	
Title: RECONFIGURABLE	:	
MULTIFREQUENCY ANTENNA WITH RF-	:	
MEMS SWITCHES	:	

This is a decision on the "REQEUST TO CORRECT ASSIGNEE AND REQUEST FOR CERTIFICATE OF CORRECTION," filed September 29, 2009, to correct the Assignee's information on the Issue Fee Transmittal Form PTOL-85(b). This submission is being treated as a petition pursuant to 37 C.F.R. § 3.81(b). Petitioner has also requested that the addresses of two joint inventors be corrected.

The petition is **GRANTED to the extent indicated herein.**

With this petition, Petitioner requests that a Certificate of Correction be issued to correct the assignee information that appears on the face of the patent. On September 29, 2009, Petitioner submitted a "Certificate of Correction" for this purpose, which requests the addition of assignee "Georgia Tech Research Corporation."

37 C.F.R. §3.81(b), effective June 25, 2004, reads:

> (b) After payment of the issue fee: Any request for issuance of an application in the name of the assignee submitted after the date of payment of the issue fee, and any request for a patent to be

> corrected to state the name of the assignee, must state that the assignment was submitted for recordation as set forth in 3.11 before issuance of the patent, and must include a request for a certificate of correction under 1.323 of this chapter (accompanied by the fee set forth in 1.20(a)) and the processing fee set forth in 1.17(i) of this chapter.

Petitioner has set forth that the assignment was submitted for recordation as set forth in 37 C.F.R. § 3.11 before issuance of the patent, and Office records confirm that an assignment was received in the Office on August 20, 2009, listing Georgia Tech Research Corporation as an assignee.

Both the $130 processing fee and the $100 certificate of correction fee will be charged to Deposit Account number 50-2961 in due course, as authorized on the second page of this petition.

It is noted that Petitioner has also requested the correction of the address of two joint inventors. At the present time, the Office has made no determination as to either of these two requests. The mailing of this decision should not be construed as an indication that either of these requested corrections has been approved.

The Certificates of Correction Branch will be notified of this decision. The Certificates of Correction Branch will:

- review Petitioner's request pertaining to the correction of the addresses of two joint inventors, and;
- issue a Certificate of Correction in due course. The requested addition of Georgia Tech Research Corporation as an assignee will appear thereon.

Telephone inquiries regarding *this decision* should be directed to the undersigned at (571) 272-3225. Any questions concerning the issuance of a certificate of correction should be directed to the Certificates of Correction Branch at (703) 305-8309.

/Paul Shanoski/
Paul Shanoski
Senior Attorney
Office of Petitions

UNITED STATES PATENT AND TRADEMARK OFFICE

UNITED STATES DEPARTMENT OF COMMERCE
United States Patent and Trademark Office
Address: COMMISSIONER FOR PATENTS
P.O. Box 1450
Alexandria, Virginia 22313-1450
www.uspto.gov

NIXON PEABODY, LLP
401 9TH STREET, NW
SUITE 900
WASHINGTON, DC 20004-2128

Mail Date: 06/01/2010

Applicant	: Gen Fujii	: DECISION ON REQUEST FOR
Patent Number	: 7655566	: RECALCULATION of PATENT
Issue Date	: 02/02/2010	: TERM ADJUSTMENT IN VIEW
Application No	: 11/488,143	: OF WYETH AND NOTICE OF INTENT TO
Filed	: 07/18/2006	: ISSUE CERTIFICATE OF CORRECTION
		:

The Request for Recalculation is **GRANTED** to the extent indicated.

The patent term adjustment has been determined to be **734** days. The USPTO will *sua sponte* issue a certificate of correction reflecting the amount of PTA days determined by the recalculation.

Prior to the issuance of the certificate of correction, the USPTO will afford patentee an opportunity to be heard and request reconsideration. Accordingly, patentee has **one month or thirty (30) days**, whichever is longer, to file a request for reconsideration of this patent term adjustment calculation. See 35 U.S.C. 154(b)(3)(B)(ii) and 37 CFR 1.322(a)(4). No extensions of time will be granted under 37 CFR 1.136.

Patentee should use document code PET.OP if electronically filing a request for reconsideration of this patent term adjustment calculation. The patentee must also include the information required by 37 CFR 1.705(b)(2) and the fee required by 37 CFR 1.18(e). If patentee does not file a timely request for reconsideration of this patent term adjustment calculation including the information required by 37 CFR 1.705(b)(2) and the fee required by 37 CFR 1.18(e), the USPTO will issue a certificate of correction reflecting the PTA determination noted above.

Patentee should be aware that in order to preserve the right to review in the United States District Court for the District of Columbia of the USPTO patent term adjustment determination, patentee must ensure that he or she also take the steps required under 35 U.S.C. 154(b)(4)(A) in a timely manner. Nothing in the request for recalculation should be construed as providing an alternative time frame for commencing a civil action under 35 U.S.C. 154(b)(4)(A).

Any questions concerning this decision should be directed to the Office of Patent Legal Administration at 571-272-7702.

UNITED STATES PATENT AND TRADEMARK OFFICE

Commissioner for Patents
United States Patent and Trademark Office
P.O. Box 1450
Alexandria, VA 22313-1450
www.uspto.gov

WENDEROTH, LIND & PONACK, L.L.P.
2033 K STREET N. W.
SUITE 800
WASHINGTON DC 20006-1021

COPY MAILED

AUG 2 9 2008

OFFICE OF PETITIONS

In re Application of	:	
Kinouchi et al.	:	
Application No. 11/488,151	:	DECISION ON PETITION
Filed: July 18, 2006	:	
Attorney Docket No. 2006_1152A	:	

This is a decision on the petition, filed July 17, 2008, which is being treated as a petition under 37 CFR 1.181 (no fee), requesting withdrawal of the holding of abandonment in the above-identified application.

The petition is **GRANTED**.

This application was held abandoned for failure to timely respond to the Office action of December 28, 2007, which set a three (3) month shortened statutory period for reply. A reply was due on or before March 28, 2008.

Petitioner states that a reply was in fact timely filed. To support this assertion, petitioner has submitted a copy of a return postcard which acknowledges receipt by the U.S. Patent and Trademark Office (USPTO) on June 30, 2008 of, *inter alia,* an amendment, three month request for extension of time and check. A copy of the previously submitted reply accompanies the petition.

A review of the record shows that the reply received on June 30, 2008 is deemed timely as June 30, 2008 was the next business day after the due date of June 28, 2008. The original reply submitted on June 30, 2008 has been located.

In view of the above, the holding of abandonment is hereby withdrawn and the application restored to pending status.

This application is being referred to Technology Center AU 3616 for appropriate action in the normal course of business on the reply received on June 30, 2008.

Telephone inquiries concerning this matter should be directed to the undersigned at (571) 272-3215.

Charlema Grant

Charlema Grant
Petitions Attorney
Office of Petitions

UNITED STATES PATENT AND TRADEMARK OFFICE

Commissioner for Patents
United States Patent and Trademark Office
P.O. Box 1450
Alexandria, VA 22313-1450
www.uspto.gov

WENDEROTH LIND & PONACK, LLP
1030 15TH STREET, NW
SUITE 400 EAST
WASHINGTON, DC 20005-1503

MAILED

APR 27 2009

OFFICE OF PETITIONS

In re Application of :
Sosuke Kinouchi et al :
Application No. 11/488,151 : ON PETITION
Filed: July 18, 2006 :
Attorney Docket No. 2006_1152A :

This is a decision on the petition, filed April 1, 2009, which is being treated as a request under 37 CFR 3.81(b)[1] to correct the assignee's name on the Fee(s) Transmittal form PTOL-85(b) so that the Letters Patent will issue to the assignee.

The request is **DISMISSED**.

Petitioner states that the correct assignee's name is Kawasaki Jukogyo Kabushiki Kaisha and that an incorrect assignee's name was included on the Part B - Fee(s) Transmittal form at the time of payment of the issue fee. Accordingly, petitioner requests that the patent issue to Kawasaki Jukogyo Kabushiki Kaisha.

37 CFR 3.81(b), effective June 25, 2004, reads:

> *After payment of the issue fee:* Any request for issuance of an application in the name of the assignee submitted after the date of payment of the issue fee, and any request for a patent to be corrected to state the name of the assignee, must state that the assignment was submitted for recordation as set forth in § 3.11 before issuance of the patent, and must include a request for a certificate of correction under § 1.323 of this chapter (accompanied by the fee set forth in § 1.20(a)) and the processing fee set forth in § 1.17(i) of this chapter.

The request under 37 CFR 3.81(b) was not accompanied by a request for a certificate of correction (and fee) as required by 3.81(b). *See also* MPEP 1481.01. As petitioner has failed to comply with the provisions of 37 CFR 3.81(b), the request cannot be granted at this time.

[1] *See* MPEP 1309, subsection II and Official Gazette of June 22, 2004

A review of Office database assignment records reflects that an assignment to Kawasaki Jukogyo Kabushiki Kaisha. Therefore, upon submission of the required certificate of correction and fee, it would be appropriate for the Office to issue a certificate of correction to correct the front page of the Letters Patent to reflect that Kawasaki Jukogyo Kabushiki Kaisha was the assignee of record at the time of issuance of the application into a patent. *Note also* 35 U.S.C. § 152.

In view of the above and **after issuance of this application into a patent, the Certificates of Correction Branch is instructed to issue a certificate of correction upon submission by petitioner of a request for a certificate of correction (and fee) which sets forth Kawasaki Jukogyo Kabushiki Kaisha, as the assignee**. *No certificate of correction will be issued which sets forth an assignee other than the assignee set forth in this request. A copy of this decision* ***must*** *accompany the request for a Certificate of Correction.*

No further renewed request under 37 CFR 3.81(b) is necessary for consideration by the Office of Petitions for issuance of a certificate of correction in the name of the assignee set forth in this request, since this decision operates as an instruction to the Certificates of Correction Branch to issue the requested certificate of correction.

Alternatively, if petitioner desires to have the correct assignee data appear on the front page of the Letters Patent, petitioner may wish to consider filing a petition to withdraw the subject application from issue under 37 CFR 1.313(c)(2). The petition to withdraw from issue under 37 CFR 1.313(c)(2) must be accompanied by a request for continued examination (RCE) and submission (which may be a request under 37 CFR 3.81(b)).

Inquiries concerning this decision should be directed to Irvin Dingle at (571) 272-3210. Any questions concerning issuance of a certificate of correction should be directed to the Certificates of Correction Branch at (571) 272-4200.

Irvin Dingle
Petition Examiner
Office of Petitions

UNITED STATES PATENT AND TRADEMARK OFFICE

UNITED STATES DEPARTMENT OF COMMERCE
United States Patent and Trademark Office
Address: COMMISSIONER FOR PATENTS
P.O. Box 1450
Alexandria, Virginia 22313-1450
www.uspto.gov

Dickinson Wright PLLC
James E. Ledbetter, Esq.
International Square
1875 Eye Street, N.W., Suite 1200
Washington, DC 20006

Mail Date: 05/17/2010

Applicant	: Yoshihiko Sumimoto	: DECISION ON REQUEST FOR
Patent Number	: 7634744	: RECALCULATION of PATENT
Issue Date	: 12/15/2009	: TERM ADJUSTMENT IN VIEW
Application No	: 11/488,196	: OF WYETH AND NOTICE OF INTENT TO
Filed	: 07/18/2006	: ISSUE CERTIFICATE OF CORRECTION
		:

The Request for Recalculation is **GRANTED** to the extent indicated.

The patent term adjustment has been determined to be **464** days. The USPTO will *sua sponte* issue a certificate of correction reflecting the amount of PTA days determined by the recalculation.

Prior to the issuance of the certificate of correction, the USPTO will afford patentee an opportunity to be heard and request reconsideration. Accordingly, patentee has **one month or thirty (30) days**, whichever is longer, to file a request for reconsideration of this patent term adjustment calculation. See 35 U.S.C. 154(b)(3)(B)(ii) and 37 CFR 1.322(a)(4). No extensions of time will be granted under 37 CFR 1.136.

Patentee should use document code PET.OP if electronically filing a request for reconsideration of this patent term adjustment calculation. The patentee must also include the information required by 37 CFR 1.705(b)(2) and the fee required by 37 CFR 1.18(e). If patentee does not file a timely request for reconsideration of this patent term adjustment calculation including the information required by 37 CFR 1.705(b)(2) and the fee required by 37 CFR 1.18(e), the USPTO will issue a certificate of correction reflecting the PTA determination noted above.

Patentee should be aware that in order to preserve the right to review in the United States District Court for the District of Columbia of the USPTO patent term adjustment determination, patentee must ensure that he or she also take the steps required under 35 U.S.C. 154(b)(4)(A) in a timely manner. Nothing in the request for recalculation should be construed as providing an alternative time frame for commencing a civil action under 35 U.S.C. 154(b)(4)(A).

Any questions concerning this decision should be directed to the Office of Patent Legal Administration at 571-272-7702.

UNITED STATES PATENT AND TRADEMARK OFFICE

UNITED STATES DEPARTMENT OF COMMERCE
United States Patent and Trademark Office
Address: COMMISSIONER FOR PATENTS
P.O. Box 1450
Alexandria, Virginia 22313-1450
www.uspto.gov

Treyz Law Group
870 Market Street, Suite 984
San Francisco, CA 94102

Mail Date: 05/17/2010

Applicant	: Ali Burney	: DECISION ON REQUEST FOR
Patent Number	: 7664978	: RECALCULATION of PATENT
Issue Date	: 02/16/2010	: TERM ADJUSTMENT IN VIEW
Application No	: 11/488,199	: OF WYETH AND NOTICE OF INTENT TO
Filed	: 07/17/2006	: ISSUE CERTIFICATE OF CORRECTION
		:

The Request for Recalculation is **GRANTED** to the extent indicated.

The patent term adjustment has been determined to be **783** days. The USPTO will *sua sponte* issue a certificate of correction reflecting the amount of PTA days determined by the recalculation.

Prior to the issuance of the certificate of correction, the USPTO will afford patentee an opportunity to be heard and request reconsideration. Accordingly, patentee has **one month or thirty (30) days**, whichever is longer, to file a request for reconsideration of this patent term adjustment calculation. See 35 U.S.C. 154(b)(3)(B)(ii) and 37 CFR 1.322(a)(4). No extensions of time will be granted under 37 CFR 1.136.

Patentee should use document code PET.OP if electronically filing a request for reconsideration of this patent term adjustment calculation. The patentee must also include the information required by 37 CFR 1.705(b)(2) and the fee required by 37 CFR 1.18(e). If patentee does not file a timely request for reconsideration of this patent term adjustment calculation including the information required by 37 CFR 1.705(b)(2) and the fee required by 37 CFR 1.18(e), the USPTO will issue a certificate of correction reflecting the PTA determination noted above.

Patentee should be aware that in order to preserve the right to review in the United States District Court for the District of Columbia of the USPTO patent term adjustment determination, patentee must ensure that he or she also take the steps required under 35 U.S.C. 154(b)(4)(A) in a timely manner. Nothing in the request for recalculation should be construed as providing an alternative time frame for commencing a civil action under 35 U.S.C. 154(b)(4)(A).

Any questions concerning this decision should be directed to the Office of Patent Legal Administration at 571-272-7702.

OIPE AUG 28 2006 PATENT & TRADEMARK OFFICE

S/N 11/488,206 **PATENT**

IN THE UNITED STATES PATENT AND TRADEMARK OFFICE

Applicant:	Michael J. Harrington et al.	Examiner: Unknown
Serial No.:	11/488,206	Group Art Unit: 1724
Filed:	July 18, 2006	Docket: 2411.001US1
Title:	SYSTEMS AND METHODS FOR EXTRACTING AND PURIFYING WATER FROM GROUNDWATER SOURCES	

PETITION TO MAKE SPECIAL UNDER 37 CFR § 1.102(c)

Commissioner for Patents
P.O. Box 1450
Alexandria, VA 22313-1450

Applicants hereby petition the Commissioner to advance the above-identified Application out of turn for accelerated examination under the provisions of 37 C.F.R. § 1.102(c)(2)(i).

The Application meets the requirements of M.P.E.P. § 708.02, section V. The Application is a new application, not yet having received any examination. Applicants believe that all of the claims are directed to a single invention; however, if the Office shall determine that they do not obviously encompass only a single invention, Applicants agree to make a telephone election without traverse. An enclosed Statement avers that a pre-examination search has been carried out, lists the field of the search, and discusses the relevant references, pointing out how the claimed subject matter is patentable over these references with the particularity required by 37 C.F.R. 1.111(b) and (c). The present petition is filed without any fee, as specified in 37 C.F.R. § 1.102(c)(2)(i).

Respectfully submitted,

MICHAEL J. HARRINGTON ET AL.

By their Representatives,

SCHWEGMAN, LUNDBERG, WOESSNER & KLUTH, P.A.
P.O. Box 2938
Minneapolis, MN 55402
612-373-6900

Date 8/23/06 By _____
Steven H Arterberry
Reg. No. 46,314

CERTIFICATE UNDER 37 CFR 1.8: The undersigned hereby certifies that this correspondence is being deposited with the United States Postal Service with sufficient postage as first class mail, in an envelope addressed to: Commissioner for Patents, P.O. Box 1450, Alexandria, VA 22313-1450 on this 23rd day of August 2006.

Dawn M. Pade
Name

_____
Signature

PETITION GRANTED

William Krynski
Special Program Examiner
Technology Center 1700

SEP 25 2006

UNITED STATES PATENT AND TRADEMARK OFFICE

Commissioner for Patents
United States Patent and Trademark Office
P.O. Box 1450
Alexandria, VA 22313-1450
www.uspto.gov

CARTER, DELUCA, FARRELL & SCHMIDT, LLP
445 BROAD HOLLOW ROAD
SUITE 420
MELVILLE NY 11747

MAILED

JUN 0 8 2009

OFFICE OF PETITIONS

In re Application of
Titi Trandafir et al.
Application No. 11/488,227
Filed: July 18, 2006
Attorney Docket No. 1429-40

DECISION ON PETITION
TO WITHDRAW
FROM RECORD

This is a decision on the Request to Withdraw as attorney or agent of record under 37 C.F.R. § 1.36(b), filed March 12, 2009 and supplemented April 9, 2009.

The request is **APPROVED**.

A grantable request to withdraw as attorney/agent of record must be signed by every attorney/agent seeking to withdraw or contain a clear indication that one attorney is signing on behalf of another/others.

The request was signed by David M. Carter on behalf of all attorneys of record who are associated with Customer No. 31544

All attorneys/agents listed in the Customer No. 31544 have been withdrawn.

Applicant is reminded that there is no attorney of record at this time.

All future correspondence will be directed to the Assignee Juvent, Inc. at the address indicated in the request.

Telephone inquiries concerning this decision should be directed to JoAnne Burke at (571)272-4584.

Ramesh Krishnamurthy
Petitions Examiner
Office of Petitions

cc: Juvent, Inc.
300 Atrium Drive, Suite 210
Somerset, NJ 08873

UNITED STATES PATENT AND TRADEMARK OFFICE

UNITED STATES DEPARTMENT OF COMMERCE
United States Patent and Trademark Office
Address: COMMISSIONER FOR PATENTS
P.O. Box 1450
Alexandria, Virginia 22313-1450
www.uspto.gov

APPLICATION NUMBER	FILING OR 371(C) DATE	FIRST NAMED APPLICANT	ATTY. DOCKET NO./TITLE
11/488,227	07/18/2006	Titi Trandafir	1429-40

CONFIRMATION NO. 7944

31554
CARTER, DELUCA, FARRELL & SCHMIDT, LLP
445 BROAD HOLLOW ROAD
SUITE 420
MELVILLE, NY 11747

POWER OF ATTORNEY NOTICE

OC000000036279606

Date Mailed: 06/03/2009

NOTICE REGARDING CHANGE OF POWER OF ATTORNEY

This is in response to the Power of Attorney filed 04/09/2009.

- The withdrawal as attorney in this application has been accepted. Future correspondence will be mailed to the new address of record. 37 CFR 1.33.

/jlburke/

Office of Data Management, Application Assistance Unit (571) 272-4000, or (571) 272-4200, or 1-888-786-0101

UNITED STATES PATENT AND TRADEMARK OFFICE

Commissioner for Patents
United States Patent and Trademark Office
P.O. Box 1450
Alexandria, VA 22313-1450
www.uspto.gov

SYNAPTICS C/O
WAGNER BLECHER LLP
123 WESTRIDGE DRIVE
WATSONVILLE CA 95076

COPY MAILED

SEP 29 2008

OFFICE OF PETITIONS

In re Application of :
Golovchenko et al. :
Application No. 11/488,248 : DECISION
Filed/Deposited: 17 July, 2006 :
Attorney Docket No. SYNA-20050630-A1 :

This is a decision on the petition filed on 31 July, 2008, considered as a petition under 37 C.F.R. §1.181 (no fee) requesting withdrawal of the holding of abandonment in the above-identified application.

The petition as considered under 37 C.F.R. §1.181 is **GRANTED**.

As to the Request to Withdraw
the Holding of Abandonment

A proper showing (for relief under 37 C.F.R. §1.181):

- (as to non-receipt) requires at the very minimum: a statement from practitioner stating that the Office action was not received by the practitioner; a statement from the practitioner attesting to the fact that a search of the file jacket and docket records for the application indicates that the Office action was not received with a copy of those docket records; and a brief statement of the calendaring process and a copy of the due-date (calendar) docket record(s) where the nonreceived Office action would have been scheduled for reply had it been received must be attached to and referenced in the practitioner's statement; alternatively,

- (for a showing of timely and proper reply) requires a statement from practitioner stating that the reply was timely submitted by the practitioner; and copies of all papers submitted as and/or in support of that reply, with/and a copy of the date-stamped receipt card, Office FAX receipt acknowledgement (not simply Petitioner's FAX transmittal), or EFS receipt acknowledgment from the Office, along with practitioner's attestation as to the correctness/completeness of his/her records.

The showing(s) must include that of the person(s) with first-hand knowledge and an acknowledgment by the Petitioner that he/she has reviewed that information in compliance with his/her duty of candor to the Office.

Petitioners' attentions always are drawn to the Commentary at MPEP §711.03(c).[1]

---

[1] The Commentary at MPEP §711.03(c) provides in pertinent part:

*****

I. PETITION TO WITHDRAW HOLDING OF ABANDONMENT

A petition to revive an abandoned application (discussed below) should not be confused with a petition from an examiner's holding of abandonment. Where an applicant contends that the application is not in fact abandoned (e.g., there is disagreement as to the sufficiency of the reply, or as to controlling dates), a petition under 37 C.F.R. 1.181(a) requesting withdrawal of the holding of abandonment is the appropriate course of action, and such petition does not require a fee. Where there is no dispute as to whether an application is abandoned (e.g., the applicant's contentions merely involve the cause of abandonment), a petition under 37 C.F.R. 1.137 (accompanied by the appropriate petition fee) is necessary to revive the abandoned application.

Two additional procedures are available for reviving an application that has become abandoned due to a failure to reply to an Office Action: (1) a petition under 37 C.F.R. 1.137(a) based on unavoidable delay; and (2) a petition under 37 C.F.R. 1.137(b) based on unintentional delay.

A. Petition To Withdraw Holding of Abandonment Based on Failure To Receive Office Action

In *Delgar v. Schulyer*, 172 USPQ 513 (D.D.C. 1971), the court decided that the Office should mail a new Notice of Allowance in view of the evidence presented in support of the contention that the applicant's representative did not receive the original Notice of Allowance. Under the reasoning of *Delgar*, an allegation that an Office action was never received may be considered in a petition to withdraw the holding of abandonment. If adequately supported, the Office may grant the petition to withdraw the holding of abandonment and remail the Office action. That is, the reasoning of *Delgar* is applicable regardless of whether an application is held abandoned for failure to timely pay the issue fee (35 U.S.C. 151) or for failure to prosecute (35 U.S.C. 133).

To minimize costs and burdens to practitioners and the Office, the Office has modified the showing required to establish nonreceipt of an Office action. The showing required to establish nonreceipt of an Office communication must include a statement from the practitioner **>describing the system used for recording an Office action received at the correspondence address of record with the USPTO. The statement should establish that the docketing system is sufficiently reliable. It is expected that the record would include, but not be limited to, the application number, attorney docket number, the mail date of the Office action and the due date for the response.

Practitioner must state that the Office action was not received at the correspondence address of record, and that a search of the practitioner's record(s), including any file jacket or the equivalent, and the application contents, indicates that the Office action was not received. A copy of the record(s) used by the practitioner where the non-received Office action would have been entered had it been received is required.

A copy of the practitioner's record(s) required to show non-receipt of the Office action should include the master docket for the firm. That is, if a three month period for reply was set in the nonreceived Office action, a copy of the master docket report showing all replies docketed for a date three months from the mail date of the nonreceived Office action must be submitted as documentary proof of nonreceipt of the Office action. If no such master docket exists, the practitioner should so state and provide other evidence such as, but not limited to, the following: the application file jacket; incoming mail log; calendar; reminder system; or the individual docket record for the application in question.<

The showing outlined above may not be sufficient if there are circumstances that point to a conclusion that the Office action may have been lost after receipt rather than a conclusion that the Office action was lost in the mail (e.g., if the practitioner has a history of not receiving Office actions).

Evidence of nonreceipt of an Office communication or action (e.g., Notice of Abandonment or an advisory action) other than that action to which reply was required to avoid abandonment would not warrant withdrawal of the holding of abandonment. Abandonment takes place by operation of law for failure to reply to an Office action or timely pay the issue fee, not by operation of the mailing of a Notice of Abandonment. See *Lorenz v. Finkl*, 333 F.2d 885, 889-90, 142 USPQ 26, 29-30 (CCPA 1964); *Krahn v. Commissioner*, 15 USPQ2d 1823, 1824 (E.D. Va 1990); *In re Application of Fischer*, 6 USPQ2d 1573, 1574 (Comm'r Pat. 1988).

B. Petition To Withdraw Holding of Abandonment Based on Evidence That a Reply Was Timely Mailed or Filed

37 C.F.R. 1.10(c) through 1.10(e) and 1.10(g) set forth procedures for petitioning the Director of the USPTO to accord a filing date to correspondence as of the date of deposit of the correspondence as "Express Mail." A petition to withdraw the holding of abandonment relying upon a timely reply placed in "Express Mail" must include an appropriate petition under 37 C.F.R. 1.10(c), (d), (e), or (g) (see MPEP § 513). When a paper is shown to have been mailed to the Office using the "Express Mail" procedures, the paper must be entered in PALM with the "Express Mail" date.

Petitioner seeks to provide the documentation in compliance with the Commentary at MPEP §711.03(c)(A) and/or (B) as it is set forth on the website (and included for reference herein).

BACKGROUND

The record reflects that:

Applicant, appeared to fail to reply timely and properly to Notice to File Corrected Application Papers (drawings) mailed on 7 August, 2006, with reply due absent extension of time on or before 7 October, 2006.

The application went abandoned by operation of law after midnight 7 October, 2006.

The Office mailed the Notice of Abandonment 28 May, 2008.

On 31 July, 2008, (over a certificate of mail) Petitioner filed the instant petition with, *inter alia*, Petitioner's averment of timely reply with copies of the reply in the form of replacement drawings with copy of Petitioner's date-stamped ("SEP 11 2006") receipt card.

Petitioner appears to comply with the guidance in the Commentary at MPEP §711.03(c), which sets forth the showing requirements herein.

Out of an abundance of caution, Petitioners always are reminded that the filing of a petition under 37 C.F.R. §1.181 does not toll any periods that may be running any action by the Office

---

Similarly, applicants may establish that a reply was filed with a postcard receipt that properly identifies the reply and provides *prima facie* evidence that the reply was timely filed. See MPEP § 503. For example, if the application has been held abandoned for failure to file a reply to a first Office action, and applicant has a postcard receipt showing that an amendment was timely filed in response to the Office action, then the holding of abandonment should be withdrawn upon the filing of a petition to withdraw the holding of abandonment. When the reply is shown to have been timely filed based on a postcard receipt, the reply must be entered into PALM using the date of receipt of the reply as shown on the post card receipt.

Where a certificate of mailing under 37 C.F.R. 1.8, but not a postcard receipt, is relied upon in a petition to withdraw the holding of abandonment, see 37 C.F.R. 1.8(b) and MPEP § 512. As stated in 37 C.F.R. 1.8(b)(3) the statement that attests to the previous timely mailing or transmission of the correspondence must be on a personal knowledge basis, or to the satisfaction of the Director of the USPTO. If the statement attesting to the previous timely mailing is not made by the person who signed the Certificate of Mailing (i.e., there is no personal knowledge basis), then the statement attesting to the previous timely mailing should include evidence that supports the conclusion that the correspondence was actually mailed (e.g., copies of a mailing log establishing that correspondence was mailed for that application). When the correspondence is shown to have been timely filed based on a certificate of mailing, the correspondence is entered into PALM with the actual date of receipt (i.e., the date that the duplicate copy of the papers was filed with the statement under 37 C.F.R. 1.8).

37 C.F.R. 1.8(b) also permits applicant to notify the Office of a previous mailing or transmission of correspondence and submit a statement under 37 C.F.R. 1.8(b)(3) accompanied by a duplicate copy of the correspondence when a reasonable amount of time (e.g., more than one month) has elapsed from the time of mailing or transmitting of the correspondence. Applicant does not have to wait until the application becomes abandoned before notifying the Office of the previous mailing or transmission of the correspondence. Applicant should check the private Patent Application Information Retrieval (PAIR) system for the status of the correspondence before notifying the Office. See MPEP §512.

C. Treatment of Untimely Petition To Withdraw Holding of Abandonment

37 C.F.R. 1.181(f) provides that, *inter alia*, except as otherwise provided, any petition not filed within 2 months from the action complained of may be dismissed as untimely. Therefore, any petition (under 37 C.F.R. 1.181) to withdraw the holding of abandonment not filed within 2 months of the mail date of a notice of abandonment (the action complained of) may be dismissed as untimely. 37 C.F.R. 1.181(f).
Rather than dismiss an untimely petition to withdraw the holding of abandonment under 37 C.F.R. 1.181(f), the Office may require a terminal disclaimer as a condition of granting an untimely petition to withdraw the holding of abandonment.

*****

and a petition seeking relief under the regulation must be filed within two (2) months of the act complained of (see: 37 C.F.R. §1.181(f)), and that those registered to practice and all others who make representations before the Office are reminded to inquire into the underlying facts of representations made to the Office and support averments with the appropriate documentation–since all owe to the Office the continuing duty to disclose.[2]

The availability of applications and application papers online to applicants/practitioners who diligently associate their Customer Number with the respective application(s) now provides an applicant/practitioner on-demand information as to events/transactions in an application.

Allegations as to the Request to
Withdraw the Holding of Abandonment

The courts have determined the construct for properly supporting a petition seeking withdrawal of a holding of abandonment.[3] (See, also, the commentary at MPEP §711.03(c)(I)(A) and (B).)

And the regulation requires that relief be sought within two (2) months of the act complained of.

Petitioner appears to have satisfied the showing requirements as discussed hereinabove.

CONCLUSION

The petition under 37 C.F.R. §1.181 is **granted**, and the 28 May, 2008, Notice of Abandonment is **vacated**.

The instant application is released to the Office of Patent Application Processing (OPAP) for further processing in due course.

Petitioner may find it beneficial to view Private PAIR within a fortnight of the instant decision to ensure that the revival has been acknowledged by the OPAP in response to this decision—and it is noted that all inquiries with regard to that change in status should be directed to the OPAP where that change of status must be effected.

---

[2] See supplement of 17 June, 1999. The Patent and Trademark Office is relying on Petitioner's duty of candor and good faith and accepting a statement made by Petitioner. See Changes to Patent Practice and Procedure, 62 Fed. Reg. at 53160 and 53178, 1203 Off. Gaz. Pat. Office at 88 and 103 (responses to comments 64 and 109)(applicant obligated under 37 C.F.R. §10.18 to inquire into the underlying facts and circumstances when providing statements to the Patent and Trademark Office).

[3] See: Delgar v. Schulyer, 172 USPQ 513 (D.D.C. 1971).

While telephone inquiries regarding this decision may be directed to the undersigned at (571) 272-3214, it is noted that all practice before the Office is in writing (see: 37 C.F.R. §1.2[4]) and the proper authority for action on any matter in this regard are the statutes (35 U.S.C.), regulations (37 C.F.R.) and the commentary on policy (MPEP). Therefore, no telephone discussion may be controlling or considered authority for Petitioner's action(s).

/ John J. Gillon, Jr./
John J. Gillon, Jr.
Senior Attorney
Office of Petitions

[4] The regulations at 37 C.F.R. §1.2 provide:

§1.2 Business to be transacted in writing.

All business with the Patent and Trademark Office should be transacted in writing. The personal attendance of applicants or their attorneys or agents at the Patent and Trademark Office is unnecessary. The action of the Patent and Trademark Office will be based exclusively on the written record in the Office. No attention will be paid to any alleged oral promise, stipulation, or understanding in relation to which there is disagreement or doubt.

UNITED STATES PATENT AND TRADEMARK OFFICE

Commissioner for Patents
United States Patent and Trademark Office
P.O. Box 1450
Alexandria, VA 22313-1450
www.uspto.gov

JENNIFER J. RIEL
9711 S. Eastern Ave Ste H-5 #65
Las Vegas NV 89183

RECEIVED

DEC 22 2008

OFFICE OF PETITIONS

In re Application of :

KLING, Werner Alecsander et al. :
Application No. 11/488,250 : DECISION ON PETITION
Filed: July 17, 2006 : TO WITHDRAW
Attorney Docket No. **5ELE-01P1** : FROM RECORD

This is a decision on the Request to Withdraw as attorney or agent of record under 37 C.F.R. § 1.36(b), filed October 22, 2008.

The request is **APPROVED**.

A grantable request to withdraw as attorney/agent of record must be signed by every attorney/agent seeking to withdraw or contain a clear indication that one attorney is signing on behalf of another/others. The Office requires the practitioner(s) requesting withdrawal to certify that he, she, or they have: (1) given reasonable notice to the client, prior to the expiration of the response period, that the practitioner(s) intends to withdraw from employment; (2) delivered to the client or a duly authorized representative of the client all papers and property (including funds) to which the client is entitled; and (3) notified the client of any responses that may be due and the time frame within which the client must respond, pursuant 37 CFR 10.40(c).

The request was signed by Jennifer J. Fiel on behalf of all attorneys of record who are associated with customer No. 69001. All attorneys/agents associated have been withdrawn. Applicant is reminded that there is no attorney of record at this time.

All future correspondence will be directed to the first named inventor Werner Alecsander Kling at the address indicated below.

There is an outstanding Office action mailed October 24, 2008 that requires a reply from the applicant.

Telephone inquiries concerning this decision should be directed to Michelle R. Eason at 571-272-4231.

Michelle R. Eason
Paralegal Specialist
Office of Petitions

cc: **WERNER ALECSANDER KLING**
MUNKERUDVOLLEN 7 A
OSLO, 1165
NORWAY

UNITED STATES PATENT AND TRADEMARK OFFICE

UNITED STATES DEPARTMENT OF COMMERCE
United States Patent and Trademark Office
Address: COMMISSIONER FOR PATENTS
P.O. Box 1450
Alexandria, Virginia 22313-1450
www.uspto.gov

BRUCE L. ADAMS, ESQ.
SUITE 1231
17 BATTERY PLACE
NEW YORK, NY 10004

Mail Date: 05/04/2010

Applicant	: Osamu Koseki	: DECISION ON REQUEST FOR
Patent Number	: 7645030	: RECALCULATION of PATENT
Issue Date	: 01/12/2010	: TERM ADJUSTMENT IN VIEW
Application No	: 11/488,255	: OF WYETH AND NOTICE OF INTENT TO
Filed	: 07/18/2006	: ISSUE CERTIFICATE OF CORRECTION
		:

The Request for Recalculation is **GRANTED** to the extent indicated.

The patent term adjustment has been determined to be **653** days. The USPTO will *sua sponte* issue a certificate of correction reflecting the amount of PTA days determined by the recalculation.

Prior to the issuance of the certificate of correction, the USPTO will afford patentee an opportunity to be heard and request reconsideration. Accordingly, patentee has **one month or thirty (30) days**, whichever is longer, to file a request for reconsideration of this patent term adjustment calculation. See 35 U.S.C. 154(b)(3)(B)(ii) and 37 CFR 1.322(a)(4). No extensions of time will be granted under 37 CFR 1.136.

Patentee should use document code PET.OP if electronically filing a request for reconsideration of this patent term adjustment calculation. The patentee must also include the information required by 37 CFR 1.705(b)(2) and the fee required by 37 CFR 1.18(e). If patentee does not file a timely request for reconsideration of this patent term adjustment calculation including the information required by 37 CFR 1.705(b)(2) and the fee required by 37 CFR 1.18(e), the USPTO will issue a certificate of correction reflecting the PTA determination noted above.

Patentee should be aware that in order to preserve the right to review in the United States District Court for the District of Columbia of the USPTO patent term adjustment determination, patentee must ensure that he or she also take the steps required under 35 U.S.C. 154(b)(4)(A) in a timely manner. Nothing in the request for recalculation should be construed as providing an alternative time frame for commencing a civil action under 35 U.S.C. 154(b)(4)(A).

Any questions concerning this decision should be directed to the Office of Patent Legal Administration at 571-272-7702.

UNITED STATES PATENT AND TRADEMARK OFFICE

Commissioner for Patents
United States Patent and Trademark Office
P.O. Box 1450
Alexandria, VA 22313-1450
www.uspto.gov

Paper No.

THE PROCTER & GAMBLE COMPANY
INTELLECTUAL PROPERTY DIVISION - WEST BLDG.
WINTON HILL BUSINESS CENTER - BOX 412
6250 CENTER HILL AVENUE
CINCINNATI OH 45224

COPY MAILED

AUG 21 2007

OFFICE OF PETITIONS

In re Application of :
Michael Niebauer : DECISION ON PETITION
Application No. 11/488,257 :
Filed: July 18, 2006 :
Attorney Docket No. 10499 :

This is a decision on the PETITION FOR REVIVAL OF AN APPLICATION FOR PATENT ABANDONED UNAVOIDABLY UNDER 37 CFR §1.137(a), filed July 6, 2007, in the above-identified application.

The petition is **GRANTED**.

The above-identified application became abandoned for failure to reply to the Notice to File Missing Parts of Application mailed August 8, 2006. The Notice set a period for reply of two (2) months from the mail date of the Notice. No extensions of time under the provisions of 37 CFR 1.136(a) were obtained. No reply having been received, the above-identified application became abandoned on October 9, 2006. A courtesy Notice of Abandonment was mailed on April 17, 2007.

Petitioner maintains that the entire delay in filing the required reply from the due date of the reply until the filing of a grantable petition was unavoidable. Petitioner asserts the abandonment was unavoidable because there was an error in the mailing of the Office action mailed August 8, 2006.

35 U.S.C. 133 provides that the Director may revive an application if the delay in replying to the outstanding Office action is shown to the satisfaction of the Director to have been unavoidable. A grantable petition to revive an unavoidably abandoned application under 37 CFR 1.137(a) must be accompanied by: (1) the reply required to the outstanding Office action or notice, unless previously filed; (2) the petition fee set forth in 37 CFR 1.17(l); (3) a showing to the satisfaction of the Director that the entire delay in filing the required reply from the due date for the reply until the filing of a grantable petition pursuant to this paragraph was unavoidable; and (4) any terminal disclaimer (and fee as set forth in §1.20(d)) required pursuant to §1.137(d).

The petition includes the required reply in the form of the response to the Notice to File Missing Parts of Application. No terminal disclaimer pursuant to §1.137(d) for revival is required. The facts and circumstances of the abandonment as set forth on petition have been considered, and it is concluded that petitioner has met his burden of establishing that the entire delay from the due date for the reply until the filing of a grantable petition was unavoidable. The record supports a conclusion that the Office erred in entering the correspondence address of record, and consequently, mailed the Notice to the incorrect address.

The correspondence address of record has been corrected.

The application file is being forwarded to the Office of Initial Patent Examination for completion of pre-examination processing, including processing of the responses submitted on petition filed July 7, 2007.

Telephone inquiries related to this decision may be directed to the undersigned at (571) 272-3219.

Nancy Johnson
Senior Petitions Attorney
Office of Petitions

UNITED STATES PATENT AND TRADEMARK OFFICE

Commissioner for Patents
United States Patent and Trademark Office
P.O. Box 1450
Alexandria, VA 22313-1450
www.uspto.gov

The John Hopkins University Applied Physics Laboratory/Office of Patent Counsel
11100 Johns Hopkins Road
Mail Stop 7-156
Laurel, MD 20723-6099

MAILED

MAR 30 2009

OFFICE OF PETITIONS

In re Application of :
H. Bruce Land, III et al. :
Application No. 11/488,264 : DECISION ON PETITION
Filed: July 18, 2006 :
Attorney Docket No. 2070-SPL :

This is a decision on the petition under 37 CFR 1.137(b), filed March 4, 2009, to revive the above-identified application.

The petition is **DISMISSED**.

Any request for reconsideration of this decision must be submitted within TWO (2) MONTHS from the mail date of this decision. Extensions of time under 37 CFR 1.136(a) are permitted. The reconsideration request should include a cover letter entitled "Renewed Petition under 37 CFR 1.137(b)." This is **not** a final agency action within the meaning of 5 U.S.C. § 704.

This application became abandoned for failure to timely pay the issue and publication fees on or before March 2, 2009, as required by the Notice of Allowance and Fee(s) Due, mailed December 1, 2008. Accordingly, the date of abandonment of this application is March 3, 2009.

A grantable petition under 37 CFR 1.137(b) must be accompanied by: (1) the required reply, unless previously filed; (2) the petition fee as set forth in 37 CFR 1.17(m); (3) a statement that the entire delay in filing the required reply from the due date for the reply until the filing of a grantable petition pursuant to 37 CFR 1.137(b) was unintentional; and (4) any terminal disclaimer (and fee as set forth in 37 CFR 1.20(d)) required by 37 CFR 1.137(d). Where there is a question as to whether either the abandonment or the delay in filing a petition under 37 CFR 1.137 was unintentional, the Director may require additional information. See MPEP 711.03(c)(II)(C) and (D). The instant petition lacks item 3.

Further correspondence with respect to this matter should be addressed as follows:

By Mail: Mail Stop PETITION
Commissioner for Patents
P. O. Box 1450
Alexandria, VA 22313-1450

By hand: U. S. Patent and Trademark Office
Customer Service Window, Mail Stop Petitions
Randolph Building
401 Dulany Street
Alexandria, VA 22314

The centralized facsimile number is **(571) 273-8300.**

Telephone inquiries concerning this decision should be directed to Kimberly Inabinet at (571) 272-4618.

Carl Friedman
Petitions Examiner
Office of Petitions

UNITED STATES PATENT AND TRADEMARK OFFICE

Commissioner for Patents
United States Patent and Trademark Office
P.O. Box 1450
Alexandria, VA 22313-1450
www.uspto.gov

The John Hopkins University Applied Physics Laboratory/Office of Patent Counsel
11100 Johns Hopkins Road
Mail Stop 7-156
Laurel, MD 20723-6099

COPY MAILED

APR 24 2009

OFFICE OF PETITIONS

In re Application of :
H. Bruce Land, III et al. :
Application No. 11/488,264 : DECISION ON PETITION
Filed: July 18, 2006 :
Attorney Docket No. 2070-SPL :

This is a decision on the renewed petition under 37 CFR 1.137(b), filed April 7, 2009, to revive the above-identified application.

The petition is **GRANTED**.

This application became abandoned for failure to timely pay the issue and publication fees on or before March 2, 2009, as required by the Notice of Allowance and Fee(s) Due, mailed December 1, 2008. Accordingly, the date of abandonment of this application is March 3, 2009. A Notice of Abandonment was mailed on March 25, 2009.

The petition satisfies the requirements of 37 CFR 1.137(b) in that petitioner has supplied (1) the reply in the form of payment of the issue fee of $755 and the publication fee of $300, (2) the petition fee of $810, and (3) a proper statement of unintentional delay. Accordingly, the issue and publication fees are accepted as being unintentionally delayed.

The petition decision mailed March 30, 2009 dismissed the petition filed March 4, 2009 for failure to provide a proper statement of unintentional delay. The renewed petition includes a proper statement.

Telephone inquiries concerning this decision should be directed to Kimberly Inabinet at (571) 272-4618.

This application is being referred to the Office of Data Management for further processing into a patent.

Carl Friedman
Petitions Examiner
Office of Petitions

UNITED STATES PATENT AND TRADEMARK OFFICE

Commissioner for Patents
United States Patent and Trademark Office
P.O. Box 1450
Alexandria, VA 22313-1450
www.uspto.gov

THE JOHNS HOPKINS UNIVERSITY
APPLIED PHYSICS LABORA
OFFICE OF PATENT COUNSEL
11100 JOHNS HOPKINS ROAD
MAIL STOP 7-156
LAUREL MD 20723-6099

COPY MAILED

NOV 0 6 2009

OFFICE OF PETITIONS

In re Application of
H. Bruce Land, III et al.
Application No. 11/488,264
Filed: July 18, 2006
Attorney Docket No. 2070-SPL

NOTICE UNDER 37 CFR. 1.28(c)

This is a notice regarding your request for acceptance of a fee deficiency submission under 37 CFR 1.28. On September 01, 1998, the court of Appeals for the Federal Circuit held that 37 CFR 1.28(c) is the sole provision governing the time for correction of the erroneous payment of the issue fee as a small entity. **See DH Technology v. Synergystex International, Inc. 154 F.3d 1333, 47 USPQ2d 1865 (Fed. Cir. Sept. 1, 1998).**

The Office no longer investigates or rejects original or reissue applications under 37 CFR 1.56. **1098 Off. Gaz. Pat. Office 502 (January 3, 1989).** Therefore, nothing in this Notice is intended to imply that an investigation was done.

Your fee deficiency submission under 37 CFR 1.28 is hereby **ACCEPTED.**

This application is no longer entitled to small entity status. Accordingly, all future fees paid in this application must be paid at the large entity rate.

Inquiries related to this communication should be directed to the Michelle R. Eason at (571) 272-4231.

Thurman Page
Petitions Examiner
Office of Petitions

UNITED STATES PATENT AND TRADEMARK OFFICE

Commissioner for Patents
United States Patent and Trademark Office
P.O. Box 1450
Alexandria, VA 22313-1450
www.uspto.gov

HAMILTON, BROOK, SMITH & REYNOLDS, P.C.
530 VIRGINIA ROAD
P.O. BOX 9133
CONCORD, MA 01742-9133

COPY MAILED

SEP 30 2008

OFFICE OF PETITIONS

In re Application of :
John W. LERCH et al. :
Application No. 11/488,278 : DECISION ON PETITION
Filed: July 18, 2006 :
Attorney Docket No. 3703.1057-001 :

This is a decision on the petition under the unintentional provisions of 37 CFR 1.137(b), filed March 7, 2008 to revive the above-identified application.

The petition is **GRANTED**.

The application became abandoned for failure to reply in a timely manner to the non-final Office action mailed January 29, 2007, which set a shortened statutory period for reply of three (3) months. No extensions of time under the provisions of 37 CFR 1.136(a) were obtained. Accordingly, the application became abandoned on April 30, 2007.

The renewed petition satisfies the requirements of 37 CFR 1.137(b) in that petitioner has supplied (1) the reply in the form of an amendment, (2) the petition fee of $1540, and (3) a proper statement of unintentional delay.

The Statutory Terminal Disclaimer filed March 7, 2008 is unnecessary. The fee of $130 will be credited to petitioner's deposit account.

The Power of Attorney and Change of Correspondence Address filed March 7, 2008 has been accepted.

It is not apparent whether the person signing the statement of unintentional delay was in a position to have firsthand or direct knowledge of the facts and circumstances of the delay at issue. Nevertheless, such statement is being treated as having been made as the result of a reasonable inquiry into the facts and circumstances of such delay. See 37 CFR 10.18(b) and Changes to Patent Practice and Procedure; Final Rule Notice, 62 Fed. Reg. 53131, 53178 (October 10, 1997), 1203 Off. Gaz. Pat. Office 63, 103 (October 21, 1997). In the event that such an inquiry has not been made, petitioner must make such an inquiry. If such inquiry results in the discovery that it is not correct that the entire delay in filing the required reply from the due

date for the reply until the filing of a grantable petition pursuant to 37 CFR 1.137(b) was unintentional, petitioner must notify the Office.

Telephone inquiries concerning this decision should be directed to Karin Reichle at (571) 272-6051.

This application is being referred to Technology Center AU 3729 for appropriate action by the Examiner in the normal course of business on the reply received March 7, 2008.

David Bucci
Petitions Examiner
Office of Petitions

UNITED STATES PATENT AND TRADEMARK OFFICE

Commissioner for Patents
United States Patent and Trademark Office
P.O. Box 1450
Alexandria, VA 22313-1450
www.uspto.gov

LAW OFFICES OF
DONALD N. MACINTOSH
180 MONTGOMERY, STE 600
SAN FRANCISCO, CA 94104

COPY MAILED

AUG 0 8 2007

OFFICE OF PETITIONS

In re Application of
Adam Gary Dargusch et al.
Application No. 11/488,282
Filed: July 17, 2006
Attorney Docket No: **A-76628/DNM**

ON PETITION

This is a decision on the petition under 37 CFR 1.137(b),[1] filed May 4, 2007, to revive the above-identified application.

The petition is **GRANTED**.

This application became abandoned October 11, 2006, for failure to timely reply to the Notice to File Corrected Application Papers mailed on August 7, 2006, which set a two (2) month shortened period for reply. No extensions of the time for reply in accordance with 37 CFR 1.136(a) were obtained prior to the abandonment. Accordingly, a Notice of Abandonment was mailed April 17, 2007.

Receipt of the replacement drawings in compliance with 37 CFR 1.84 and 37 CFR 1.121 is acknowledged.

The application is being forwarded to the Office of Initial Patent Examination for further processing.

---

[1] Effective December 1, 1997, the provisions of 37 CFR 1.137(b) now provide that where the delay in reply was unintentional, a petition may be filed to revive an abandoned application or a lapsed patent pursuant to 37 CFR 1.137(b). A grantable petition filed under the provisions of 37 CFR 1.137(b) must be accompanied by:

(1) the required reply, unless previously filed. In a nonprovisional application abandoned for failure to prosecute, the required reply may be met by the filing of a continuing application. In a nonprovisional application filed on or after June 8, 1995, and abandoned for failure to prosecute, the required reply may also be met by the filing of a request for continued examination in compliance with § 1.114. In an application or patent, abandoned or lapsed for failure to pay the issue fee or any portion thereof, the required reply must be the payment of the issue fee or any outstanding balance thereof. In an application abandoned for failure to pay the publication fee, the required reply must include payment of the publication fee.

(2) the petition fee as set forth in 37 CFR 1.17(m);

(3) a statement that the entire delay in filing the required reply from the due date for the reply until the filing of a grantable petition pursuant to 37 CFR 1.137(b) was unintentional. The Commissioner may required additional information where there is a question whether the delay was unintentional; and

(4) any terminal disclaimer (and fee as set forth in 37 CFR 1.20(d)) required pursuant to 37 CFR 1.137(c)).

Telephone inquiries concerning this matter should be directed to the undersigned Petitions Attorney at (571) 272-3212.

Patricia Faison-Ball
Senior Petitions Attorney
Office of Petitions

UNITED STATES PATENT AND TRADEMARK OFFICE

UNITED STATES DEPARTMENT OF COMMERCE
United States Patent and Trademark Office
Address: COMMISSIONER FOR PATENTS
P.O. Box 1450
Alexandria, Virginia 22313-1450
www.uspto.gov

Winston & Strawn LLP
Patent Department
1700 K Street, N.W.
Washington, DC 20006

Mail Date: 04/21/2010

Applicant	: Christopher M. Paterson	: DECISION ON REQUEST FOR
Patent Number	: 7597749	: RECALCULATION of PATENT
Issue Date	: 10/06/2009	: TERM ADJUSTMENT IN VIEW
Appliction No	: 11/488,301	: OF WYETH AND NOTICE OF INTENT TO
Filed	: 07/18/2006	: ISSUE CERTIFICATE OF CORRECTION
		:

The Request for Recalculation is **GRANTED** to the extent indicated.

The patent term adjustment has been determined to be **447** days. The USPTO will *sua sponte* issue a certificate of correction reflecting the amount of PTA days determined by the recalculation.

Prior to the issuance of the certificate of correction, the USPTO will afford patentee an opportunity to be heard and request reconsideration. Accordingly, patentee has **one month or thirty (30) days**, whichever is longer, to file a request for reconsideration of this patent term adjustment calculation. See 35 U.S.C. 154(b)(3)(B)(ii) and 37 CFR 1.322(a)(4). No extensions of time will be granted under 37 CFR 1.136.

Patentee should use document code PET.OP if electronically filing a request for reconsideration of this patent term adjustment calculation. The patentee must also include the information required by 37 CFR 1.705(b)(2) and the fee required by 37 CFR 1.18(e). If patentee does not file a timely request for reconsideration of this patent term adjustment calculation including the information required by 37 CFR 1.705(b)(2) and the fee required by 37 CFR 1.18(e), the USPTO will issue a certificate of correction reflecting the PTA determination noted above.

Patentee should be aware that in order to preserve the right to review in the United States District Court for the District of Columbia of the USPTO patent term adjustment determination, patentee must ensure that he or she also take the steps required under 35 U.S.C. 154(b)(4)(A) in a timely manner. Nothing in the request for recalculation should be construed as providing an alternative time frame for commencing a civil action under 35 U.S.C. 154(b)(4)(A).

Any questions concerning this decision should be directed to the Office of Patent Legal Administration at 571-272-7702.

UNITED STATES PATENT AND TRADEMARK OFFICE

UNITED STATES DEPARTMENT OF COMMERCE
United States Patent and Trademark Office
Address: COMMISSIONER FOR PATENTS
P.O. Box 1450
Alexandria, Virginia 22313-1450
www.uspto.gov

APPL NO.	FILING OR 371 (c) DATE	ART UNIT	FIL FEE REC'D	ATTY.DOCKET NO	DRAWINGS	TOT CLMS	IND CLMS
11/488,306	07/17/2006	2115	1000	MSFT127435	5	20	3

CONFIRMATION NO. 8016

CORRECTED FILING RECEIPT

OC000000020662841

38991
CHRISTENSEN, O'CONNOR, JOHNSON, KINDNESS, PLLC
1420 FIFTH AVENUE
SUITE 2800
SEATTLE, WA 98101-2347

Date Mailed: 10/02/2006

Receipt is acknowledged of this regular Patent Application. It will be considered in its order and you will be notified as to the results of the examination. Be sure to provide the U.S. APPLICATION NUMBER, FILING DATE, NAME OF APPLICANT, and TITLE OF INVENTION when inquiring about this application. Fees transmitted by check or draft are subject to collection. Please verify the accuracy of the data presented on this receipt. **If an error is noted on this Filing Receipt, please mail to the Commissioner for Patents P.O. Box 1450 Alexandria Va 22313-1450. Please provide a copy of this Filing Receipt with the changes noted thereon. If you received a "Notice to File Missing Parts" for this application, please submit any corrections to this Filing Receipt with your reply to the Notice. When the USPTO processes the reply to the Notice, the USPTO will generate another Filing Receipt incorporating the requested corrections (if appropriate).**

Applicant(s)

Kenneth W. Stufflebeam, Redmond, WA;

Assignment For Published Patent Application

Microsoft Corporation, Redmond, WA

Power of Attorney: The patent practitioners associated with Customer Number **38991**.

Domestic Priority data as claimed by applicant

Foreign Applications

If Required, Foreign Filing License Granted: 08/10/2006

The country code and number of your priority application, to be used for filing abroad under the Paris Convention, is US11/488,306

Projected Publication Date: 01/17/2008

Non-Publication Request: No

Early Publication Request: No

Title

Granular reduction in power consumption

Preliminary Class

713

PROTECTING YOUR INVENTION OUTSIDE THE UNITED STATES

Since the rights granted by a U.S. patent extend only throughout the territory of the United States and have no effect in a foreign country, an inventor who wishes patent protection in another country must apply for a patent in a specific country or in regional patent offices. Applicants may wish to consider the filing of an international application under the Patent Cooperation Treaty (PCT). An international (PCT) application generally has the same effect as a regular national patent application in each PCT-member country. The PCT process **simplifies** the filing of patent applications on the same invention in member countries, but **does not result** in a grant of "an international patent" and does not eliminate the need of applicants to file additional documents and fees in countries where patent protection is desired.

Almost every country has its own patent law, and a person desiring a patent in a particular country must make an application for patent in that country in accordance with its particular laws. Since the laws of many countries differ in various respects from the patent law of the United States, applicants are advised to seek guidance from specific foreign countries to ensure that patent rights are not lost prematurely.

Applicants also are advised that in the case of inventions made in the United States, the Director of the USPTO must issue a license before applicants can apply for a patent in a foreign country. The filing of a U.S. patent application serves as a request for a foreign filing license. The application's filing receipt contains further information and guidance as to the status of applicant's license for foreign filing.

Applicants may wish to consult the USPTO booklet, "General Information Concerning Patents" (specifically, the section entitled "Treaties and Foreign Patents") for more information on timeframes and deadlines for filing foreign patent applications. The guide is available either by contacting the USPTO Contact Center at 800-786-9199, or it can be viewed on the USPTO website at http://www.uspto.gov/web/offices/pac/doc/general/index.html.

For information on preventing theft of your intellectual property (patents, trademarks and copyrights), you may wish to consult the U.S. Government website, http://www.stopfakes.gov. Part of a Department of Commerce initiative, this website includes self-help "toolkits" giving innovators guidance on how to protect intellectual property in specific countries such as China, Korea and Mexico. For questions regarding patent enforcement issues, applicants may call the U.S. Government hotline at 1-866-999-HALT (1-866-999-4158).

LICENSE FOR FOREIGN FILING UNDER
Title 35, United States Code, Section 184
Title 37, Code of Federal Regulations, 5.11 & 5.15

GRANTED

The applicant has been granted a license under 35 U.S.C. 184, if the phrase "IF REQUIRED, FOREIGN FILING LICENSE GRANTED" followed by a date appears on this form. Such licenses are issued in all applications where the conditions for issuance of a license have been met, regardless of whether or not a license may be required as set forth in 37 CFR 5.15. The scope and limitations of this license are set forth in 37 CFR 5.15(a) unless an earlier license has been issued under 37 CFR 5.15(b). The license is subject to revocation upon written notification. The date indicated is the effective date of the license, unless an earlier license of similar scope has been granted under 37 CFR 5.13 or 5.14.

This license is to be retained by the licensee and may be used at any time on or after the effective date thereof unless it is revoked. This license is automatically transferred to any related applications(s) filed under 37 CFR

1.53(d). This license is not retroactive.

The grant of a license does not in any way lessen the responsibility of a licensee for the security of the subject matter as imposed by any Government contract or the provisions of existing laws relating to espionage and the national security or the export of technical data. Licensees should apprise themselves of current regulations especially with respect to certain countries, of other agencies, particularly the Office of Defense Trade Controls, Department of State (with respect to Arms, Munitions and Implements of War (22 CFR 121-128)); the Bureau of Industry and Security, Department of Commerce (15 CFR parts 730-774); the Office of Foreign Assets Control, Department of Treasury (31 CFR Parts 500+) and the Department of Energy.

NOT GRANTED

No license under 35 U.S.C. 184 has been granted at this time, if the phrase "IF REQUIRED, FOREIGN FILING LICENSE GRANTED" DOES NOT appear on this form. Applicant may still petition for a license under 37 CFR 5.12, if a license is desired before the expiration of 6 months from the filing date of the application. If 6 months has lapsed from the filing date of this application and the licensee has not received any indication of a secrecy order under 35 U.S.C. 181, the licensee may foreign file the application pursuant to 37 CFR 5.15(b).

UNITED STATES PATENT AND TRADEMARK OFFICE

Commissioner for Patents
United States Patent and Trademark Office
P.O. Box 1450
Alexandria, VA 22313-1450
www.uspto.gov

THOMAS F. LENIHAN
TEKTRONIX, INC.
14150 S. W. KARL BRAUN DRIVE
P.O. BOX 500 (50-LAW)
BEAVERTON OR 97077-0001

MAILED

JUN 18 2010

OFFICE OF PETITIONS

In re Application of :
Dobyns et al. :
Application No. 11/488,310 : DECISION ON PETITION
Filed: July 17, 2006 :
Attorney Docket No. 7332-US :

This is a decision on the petition under the unintentional provisions of 37 CFR 1.137(b), filed May 28, 2010, to revive the above-identified application.

The petition is **GRANTED**.

This above-identified application became abandoned for failure to timely file a reply to a non-final Office action mailed October 13, 2009. The Office Action set a three (3) month shortened statutory period for reply. No extensions of time were obtained under the provisions of 37 CFR 1.136(a). Accordingly, this application became abandoned on January 14, 2010. This decision precedes the mailing of a Notice of Abandonment.

The petition satisfies the requirements of 37 CFR 1.137(b) in that petitioner has supplied (1) the reply in the form of an amendment (2) the petition fee of $1620.00, and (3) an adequate statement of unintentional delay.

37 CFR 1.137(b)(3) requires a statement that "the entire delay in filing the required reply from the due date for the reply until the filing of a grantable petition pursuant to 37 CFR 1.137(b) was unintentional." Since the statement appearing in the petition varies from the language required by 37 CFR 1.137(b)(3), the statement is being construed as the required statement. Petitioner must notify the Office if this is **not** a correct reading of the statement appearing in the petition.

Telephone inquiries concerning this decision should be directed to the undersigned at (571) 272-3215.

This application is being referred to Technology Center AU 2628 for appropriate action by the Examiner in the normal course of business on the reply received

Charlema Grant
Petitions Attorney
Office of Petitions

UNITED STATES PATENT AND TRADEMARK OFFICE

UNITED STATES DEPARTMENT OF COMMERCE
United States Patent and Trademark Office
Address: COMMISSIONER FOR PATENTS
P.O. Box 1450
Alexandria, Virginia 22313-1450
www.uspto.gov

BRIAN J. REES
GENTEX CORPORATION
600 NORTH CENTENNIAL STREET
ZEELAND, MI 49464

Mail Date: 04/21/2010

Applicant	: Brian J. Kadwell	: DECISION ON REQUEST FOR
Patent Number	: 7616126	: RECALCULATION of PATENT
Issue Date	: 11/10/2009	: TERM ADJUSTMENT IN VIEW
Appliction No	: 11/488,315	: OF WYETH AND NOTICE OF INTENT TO
Filed	: 07/18/2006	: ISSUE CERTIFICATE OF CORRECTION
		:

The Request for Recalculation is **GRANTED** to the extent indicated.

The patent term adjustment has been determined to be **320** days. The USPTO will *sua sponte* issue a certificate of correction reflecting the amount of PTA days determined by the recalculation.

Prior to the issuance of the certificate of correction, the USPTO will afford patentee an opportunity to be heard and request reconsideration. Accordingly, patentee has **one month or thirty (30) days**, whichever is longer, to file a request for reconsideration of this patent term adjustment calculation. See 35 U.S.C. 154(b)(3)(B)(ii) and 37 CFR 1.322(a)(4). No extensions of time will be granted under 37 CFR 1.136.

Patentee should use document code PET.OP if electronically filing a request for reconsideration of this patent term adjustment calculation. The patentee must also include the information required by 37 CFR 1.705(b)(2) and the fee required by 37 CFR 1.18(e). If patentee does not file a timely request for reconsideration of this patent term adjustment calculation including the information required by 37 CFR 1.705(b)(2) and the fee required by 37 CFR 1.18(e), the USPTO will issue a certificate of correction reflecting the PTA determination noted above.

Patentee should be aware that in order to preserve the right to review in the United States District Court for the District of Columbia of the USPTO patent term adjustment determination, patentee must ensure that he or she also take the steps required under 35 U.S.C. 154(b)(4)(A) in a timely manner. Nothing in the request for recalculation should be construed as providing an alternative time frame for commencing a civil action under 35 U.S.C. 154(b)(4)(A).

Any questions concerning this decision should be directed to the Office of Patent Legal Administration at 571-272-7702.

UNITED STATES PATENT AND TRADEMARK OFFICE

Commissioner for Patents
United States Patent and Trademark Office
P.O. Box 1450
Alexandria, VA 22313-1450
www.uspto.gov

JJGJR.: 12-07

Paper No: __

HENRY T. BRENDZEL
P.O. BOX 574
SPRINGFIELD NJ 07081

COPY MAILED

DEC 28 2007

OFFICE OF PETITIONS

In re Application of
Al-Dhahir, et al. :
Application No. 11/488,342 : DECISION ON PETITION
Filed: 18 July, 2006 :
Attorney Docket No. Al-Dhahir 2001-0200Acont. :

This is a decision on the petition filed on 8 September, 2006, and considered under 37 C.F.R. §1.53.

The Office regrets the delay in addressing the matter—the petition was presented to the attorneys in the Office of Petitions only at this writing.

For the reasons set forth below, the petition under 37 C.F.R. §1.53 is **DISMISSED** without prejudice.

BACKGROUND

The instant application was deposited on 18 July, 2006

On 8 August, 2006, the Office of Initial Patent Examination (OIPE) mailed a Notice to File Corrected Application Papers and included therein Notice of Omitted Items—to wit: "page 8 of the specification"—thus, the application had been accorded a filing date without those pages.

OIPE indicated that Petitioner might:

- contend via petition that page 8 of the specification had been submitted on deposit and so evidence that condition with the proper supporting documentation (i.e., a date stamped receipt card (see: MPEP §503)) along with a copy of the specification; or

- submit page 8 of the specification and accept the date of submission as the filing date.

OIPE set a two- (2-) month period for reply.

On 8 September, 2006, Petitioner submitted the instant petition, including therewith, *inter alia*, what is averred to be a true copy of page 8 of the specification, however, Petitioner contemporaneously avers that the application was complete upon deposit on 18 July, 2006, but provides no evidence of that condition (i.e., a receipt card, as discussed above), and makes no explicit statement of either acceptance of:

- the application as deposited without page 8 of the specification; or

- the later filing date of the submission of page 8 of the specification.

In the absence of a date-stamped receipt card, Petitioner must chose one alternative or the other.

ANALYSIS

A search of the official file reveals that:

- on 18 July, 2006, Petitioner deposited the instant application;

- the Office record reflects that page 8 of the specification was missing upon deposit;

- there is no the date-stamped receipt card submitted Petitioner.

Because Petitioner provides no statement as to his intent to accept or to reject a later filing date for the entire application, it is not possible to act on the instant petition.

Petitioner may accept the application as deposited or request a the later filing date (that of the submission of the pages in question), however, Petitioner must be explicit in this matter and Petitioner is given two (2) months from the mail date of this decision within which to reply to this decision.

Accordingly, the instant petition is dismissed pending Petitioner's submission of his express intent in this matter.

The Notice mailed on 8 August, 2006, was properly sent and will not be disturbed.

CONCLUSION

The petition is **dismissed**; the petition fee will not be refunded because there is no indication as of this writing of error on the part of the Office, and **Petitioner is given two (2) months from the mail date of this decision within which to reply to this decision, moreover, Petitioner must be explicit in this matter**.

Further correspondence with respect to this matter should be addressed as follows:

By mail: Commissioner for Patents
P.O. Box 1450
Alexandria, VA 22313-1450

By FAX: IFW Formal Filings
(571) 273-8300
ATTN.: Office of Petitions

By hand: Mail Stop: Petition
Customer Service Window
Randolph Building
401 Dulany Street
Alexandria, VA 22314

While telephone inquiries regarding this decision may be directed to the undersigned at (571) 272-3214, it is noted that all practice before the Office is in writing (see: 37 C.F.R. §1.2[1]) and the proper authority for action on any matter in this regard are the statutes (35 U.S.C.), regulations (37 C.F.R.) and the commentary on policy (MPEP). Therefore, no telephone discussion may be controlling or considered authority for Petitioner's/Caller's action(s).

John J. Gillon, Jr.
Senior Attorney
Office of Petitions

[1] The regulations at 37 C.F.R. §1.2 provide:

§1.2 Business to be transacted in writing.

All business with the Patent and Trademark Office should be transacted in writing. The personal attendance of applicants or their attorneys or agents at the Patent and Trademark Office is unnecessary. The action of the Patent and Trademark Office will be based exclusively on the written record in the Office. No attention will be paid to any alleged oral promise, stipulation, or understanding in relation to which there is disagreement or doubt.

UNITED STATES PATENT AND TRADEMARK OFFICE

Commissioner for Patents
United States Patent and Trademark Office
P.O. Box 1450
Alexandria, VA 22313-1450
www.uspto.gov

HENRY T. BRENDZEL
P.O. BOX 574
SPRINGFIELD NJ 07081

COPY MAILED

SEP 25 2008

OFFICE OF PETITIONS

In re Application of :
Al-Dhahir, et al. :
Application No. 11/488,342 : DECISION
Filed/Deposited: 18 July, 2006 :
Attorney Docket No. Al-Dhahir 2001-0200Acont :

This is a decision on the petition filed on 19 February, 2008, seeking a filing date of 18 July, 2006, for page 8 of the specification (description, claims, abstract) , and properly considered under 37 C.F.R. §1.53.

The Office regrets the delay in addressing the matter—the petition was presented to the attorneys in the Office of Petitions only at this writing.

For the reasons set forth below, the petition under 37 C.F.R. §1.53 is **GRANTED**.

BACKGROUND

The instant application was deposited on 18 July, 2006

On 8 August, 2006, the Office of Patent Application Processing (OPAP) (formerly the Office of Initial Patent Examination (OIPE) mailed a Notice to File Corrected Application Papers and included therein Notice of Omitted Items—to wit: "page 8 of the specification"—thus, the application had been accorded a filing date without those pages.

OPAP indicated that Petitioner might:

- contend via petition that the pages were present upon deposit, and so evidence that condition with the proper supporting documentation (i.e., a date stamped receipt card (see: MPEP §503)) along with a copy of the pages; or

- submit the pages and accept the date of that submission as the filing date; or

- accept the application as deposited.

OPAP set a two- (2-) month period for reply.

On 8 September, 2006, Petitioner submitted the original petition, including therewith, *inter alia*, what was averred to be a true copy of the specification, including a true copy thereof page 8 of the specification. However, while Petitioner contemporaneously averred that the application was complete upon deposit on 18 July, 2006, he provided no evidence of that condition (i.e., a receipt card, as discussed above), and makes no explicit statement of either acceptance of: the application as deposited without page 8 of the specification; or the later filing date of the submission of page 8 of the specification. In the absence of a date-stamped receipt card, Petitioner was compelled to chose one alternative or the other—and so the petition was dismissed on 28 December, 2007.

On 19 February, 2008, Petitioner filed the instant petition, including therewith, *inter alia*, what is averred to be a true copy of Petitioner's date-stamped ("071806") receipt card. (While Petitioner suggests that his earlier petition "fell through the cracks in the USPTO," Petitioner failed to file a copy of the date-stamped receipt card with his original petition as instructed by the 8 August, 2006, Notice ("... with evidence of such deposit ...") and submitted no status inquiry between the filing of the petition and the mailing of the decision.)

ANALYSIS

A search of the official file reveals that:

- on 18 July, 2006, Petitioner deposited the instant application;

- the Office record appears, as discussed hereinabove, to have reflected that the page 8 of the specification (description, claims, abstract) was missing upon deposit;

- the date-stamped receipt card evidences—in pertinent part—the following:

***

Specification: 20 pages (Emphasis supplied)

***

Because Petitioner's receipt card adequately itemized the contents of the application as to the elements deposited, it is concluded that the application, including 20 pages of specification with page 8 thereof (description, claims and abstract), with no duplicates, and 4 sheets of drawings, was deposited with the Office on 18 July, 2006, and page 8 of the specification (description, claims, abstract) subsequently was misplaced in the Office.

Accordingly, the application, including 20 pages of specification, including page 8 of the specification (description, claims and abstract) and 4 sheets of drawings, is entitled to a filing date of 18 July, 2006.

The Notice mailed 8 August, 2006, was sent in error to the extent that it reflected the omission of page 8 of the specification (description, claims, abstract), and is hereby **vacated** to the extent that it stated that the application was filed without page 8 of the specification (description, claims, abstract).

CONCLUSION

The petition is **granted**; the petition fee waived and is being refunded *via* Treasury check—should Petitioner later find that a fee was not refunded, Petitioner should send a refund request to Office of Finance with a copy of this decision.

This application is released to OPAP for further processing with a filing date of 18 July, 2006, for the entire application including 20 pages of specification (description, claims and abstract) and 4 sheet s of drawings, with pages 1 - 20 of the specification (description, claims, abstract), and 4 sheets of drawings described in the specification, using:

- **pages 1 – 7 and 9 – 20 of the specification (description, claims abstract) and 4 sheets of drawings as described in the specification deposited on 18 July, 2006; and**

- **page 8 of the specification (description, claims, abstract) deposited on 8 September, 2006; and further,**

with direction to OPAP to correct Office records and provide to Petitioner a corrected filing receipt setting forth a filing date of 18 July, 2006, and reflecting therein that 20 pages of specification (description and claims) and 4 sheets of drawings were present on filing.

While telephone inquiries regarding this decision may be directed to the undersigned at (571) 272-3214, it is noted that all practice before the Office is in writing (see: 37 C.F.R. §1.2[1]) and the proper authority for action on any matter in this regard are the statutes (35 U.S.C.), regulations (37 C.F.R.) and the commentary on policy (MPEP). Therefore, no telephone discussion may be controlling or considered authority for Petitioner's/Caller's action(s).

/ John J. Gillon, Jr.
John J. Gillon, Jr.
Senior Attorney
Office of Petitions

[1] The regulations at 37 C.F.R. §1.2 provide:

§1.2 Business to be transacted in writing.

All business with the Patent and Trademark Office should be transacted in writing. The personal attendance of applicants or their attorneys or agents at the Patent and Trademark Office is unnecessary. The action of the Patent and Trademark Office will be based exclusively on the written record in the Office. No attention will be paid to any alleged oral promise, stipulation, or understanding in relation to which there is disagreement or doubt.

UNITED STATES PATENT AND TRADEMARK OFFICE

UNITED STATES DEPARTMENT OF COMMERCE
United States Patent and Trademark Office
Address: COMMISSIONER FOR PATENTS
P.O. Box 1450
Alexandria, Virginia 22313-1450
www.uspto.gov

Daniels Patent Law PLLC
43 Centre Street
Concord, NH 03301

Mail Date: 04/21/2010

Applicant	: Walter Richard Gaillen	: DECISION ON REQUEST FOR
Patent Number	: 7614526	: RECALCULATION of PATENT
Issue Date	: 11/10/2009	: TERM ADJUSTMENT IN VIEW
Appliction No	: 11/488,349	: OF WYETH AND NOTICE OF INTENT TO
Filed	: 07/18/2006	: ISSUE CERTIFICATE OF CORRECTION
		:

The Request for Recalculation is **GRANTED** to the extent indicated.

The patent term adjustment has been determined to be **648** days. The USPTO will *sua sponte* issue a certificate of correction reflecting the amount of PTA days determined by the recalculation.

Prior to the issuance of the certificate of correction, the USPTO will afford patentee an opportunity to be heard and request reconsideration. Accordingly, patentee has **one month or thirty (30) days**, whichever is longer, to file a request for reconsideration of this patent term adjustment calculation. See 35 U.S.C. 154(b)(3)(B)(ii) and 37 CFR 1.322(a)(4). No extensions of time will be granted under 37 CFR 1.136.

Patentee should use document code PET.OP if electronically filing a request for reconsideration of this patent term adjustment calculation. The patentee must also include the information required by 37 CFR 1.705(b)(2) and the fee required by 37 CFR 1.18(e). If patentee does not file a timely request for reconsideration of this patent term adjustment calculation including the information required by 37 CFR 1.705(b)(2) and the fee required by 37 CFR 1.18(e), the USPTO will issue a certificate of correction reflecting the PTA determination noted above.

Patentee should be aware that in order to preserve the right to review in the United States District Court for the District of Columbia of the USPTO patent term adjustment determination, patentee must ensure that he or she also take the steps required under 35 U.S.C. 154(b)(4)(A) in a timely manner. Nothing in the request for recalculation should be construed as providing an alternative time frame for commencing a civil action under 35 U.S.C. 154(b)(4)(A).

Any questions concerning this decision should be directed to the Office of Patent Legal Administration at 571-272-7702.

UNITED STATES PATENT AND TRADEMARK OFFICE

Commissioner for Patents
United States Patent and Trademark Office
P.O. Box 1450
Alexandria, VA 22313-1450
www.uspto.gov

BANNER & WITCOFF, LTD.
TEN SOUTH WACKER DRIVE, SUITE 3000
CHICAGO, IL 60606

COPY MAILED

DEC 2 0 2007

OFFICE OF PETITIONS

In re Application of :
Sharon Rossmark et al :
Application No. 11/488,356 : DECISION ON PETITION
Filed: July 18, 2006 : UNDER 37 CFR 1.137(b)
Attorney Docket No. 006591.00034 :

This is a decision on the petition, filed August 29, 2007 and supplemented on December 14, 2007, which is being treated as a petition under 37 CFR 1.137(b) to revive the instant nonprovisional application for failure to timely notify the U.S. Patent and Trademark (USPTO) of the filing of an application in a foreign country, or under a multinational treaty that requires publication of applications eighteen months after filing. *See* 37 CFR 1.137(f).

The petition is **GRANTED**.

Petitioner states that the instant nonprovisional application is the subject of an application filed in an eighteen-month publication country on September 27, 2006. However, the USPTO was unintentionally not notified of this filing within 45 days subsequent to the filing of the subject application in an eighteen-month publication country.

In view of the above, this application became abandoned pursuant to 35 U.S.C. § 122(b)(2)(B)(iii) and 37 CFR 1.213(c) for failure to timely notify the Office of the filing of an application in a foreign country or under a multilateral international agreement that requires publication of applications 18 months after filing.

A petition to revive an application abandoned pursuant to 35 U.S.C. 122(b)(2)(B)(iii) for failure to notify the USPTO of a foreign filing must be accompanied by:

(1) the required reply which is met by the notification of such filing in a foreign country or under a multinational treaty;
(2) the petition fee as set forth in 37 CFR 1.17(m); and
(3) a statement that the entire delay in filing the required reply from the due date of the reply until the filing of a grantable petition was unintentional.

The instant petition has been found to be in compliance with 37 CFR 1.137(b). Accordingly, the failure to timely notify the USPTO of a foreign or international filing within 45 days after the date of filing of such foreign or international application as provided by 35 U.S.C. § 122(b)(2)(B)(iii) and 37 CFR 1.213(c) is accepted as having been unintentionally delayed.

The previous Request and Certification under 35 U.S.C. § 122(b)(2)(B)(i) has been rescinded. A Notice Regarding Rescission of Nonpublication Request which sets forth the projected publication date of March 27, 2008 accompanies this decision on petition.

Telephone inquiries concerning this decision should be directed to Irvin Dingle at (571) 272-3210.

This application is being referred to Technology Center Art Unit 3627 for examination in due course.

Irvin Dingle
Petition Examiner
Office of Petitions

ATTACHMENT: Notice Regarding Rescission of Nonpublication Request

UNITED STATES PATENT AND TRADEMARK OFFICE

UNITED STATES DEPARTMENT OF COMMERCE
United States Patent and Trademark Office
Address: COMMISSIONER FOR PATENTS
P.O. Box 1450
Alexandria, Virginia 22313-1450
www.uspto.gov

APPLICATION NUMBER	FILING OR 371(C) DATE	FIRST NAMED APPLICANT	ATTY. DOCKET NO./TITLE
11/488,356	07/18/2006	Sharon Rossmark	006591.00034

CONFIRMATION NO. 8905

22908
BANNER & WITCOFF, LTD.
TEN SOUTH WACKER DRIVE
SUITE 3000
CHICAGO, IL 60606

NONPUBLICATION RESCISSION LETTER

OC000000027362651

Date Mailed: 12/19/2007

Communication Regarding Rescission Of Nonpublication Request and/or Notice of Foreign Filing

Applicant's rescission of the previously-filed nonpublication request and/or notice of foreign filing is acknowledged. The paper has been reflected in the Patent and Trademark Office's (USPTO's) computer records so that the earliest possible projected publication date can be assigned.

The projected publication date is 03/27/2008.

If applicant rescinded the nonpublication request before or on the date of "foreign filing,"[1] then no notice of foreign filing is required.

If applicant foreign filed the application after filing the above application and before filing the rescission, and the rescission did not also include a notice of foreign filing, then a notice of foreign filing (not merely a rescission) is required to be filed within 45 days of the date of foreign filing. See 35 U.S.C. § 122(b)(2)(B)(iii), and Clarification of the United States Patent and Trademark Office's Interpretation of the Provisions of 35 U.S.C. § 122(b)(2)(B)(ii)-(iv), 1272 Off. Gaz. Pat. Office 22 (July 1, 2003).

If a notice of foreign filing is required and is not filed within 45 days of the date of foreign filing, then the application becomes abandoned pursuant to 35 U.S.C. § 122(b)(2)(B)(iii). In this situation, applicant should either file a petition to revive or notify the Office that the application is abandoned. See 37 CFR 1.137(f). Any such petition to revive will be forwarded to the Office of Petitions for a decision. Note that the filing of the petition will not operate to stay any period of reply that may be running against the application.

Questions regarding petitions to revive should be directed to the Office of Petitions at (571) 272-3282. Questions regarding publications of patent applications should be directed to the patent application publication hotline at (703) 605-4283 or by e-mail pgpub@uspto.gov.

[1] Note, for purpose of this notice, that "foreign filing" means "filing an application directed to the same invention in another country, or under a multilateral international agreement, that requires publication of applications 18 months after filing".

UNITED STATES PATENT AND TRADEMARK OFFICE

UNITED STATES DEPARTMENT OF COMMERCE
United States Patent and Trademark Office
Address: COMMISSIONER FOR PATENTS
P.O. Box 1450
Alexandria, Virginia 22313-1450
www.uspto.gov

CHRISTOPHER & WEISBERG, P.A.
200 EAST LAS OLAS BOULEVARD
SUITE 2040
FORT LAUDERDALE, FL 33301

Mail Date: 05/04/2010

Applicant	: Hang Zhang	: DECISION ON REQUEST FOR
Patent Number	: 7623487	: RECALCULATION of PATENT
Issue Date	: 11/24/2009	: TERM ADJUSTMENT IN VIEW
Application No	: 11/488,366	: OF WYETH AND NOTICE OF INTENT TO
Filed	: 07/17/2006	: ISSUE CERTIFICATE OF CORRECTION
		:

The Request for Recalculation is **GRANTED** to the extent indicated.

The patent term adjustment has been determined to be **698** days. The USPTO will *sua sponte* issue a certificate of correction reflecting the amount of PTA days determined by the recalculation.

Prior to the issuance of the certificate of correction, the USPTO will afford patentee an opportunity to be heard and request reconsideration. Accordingly, patentee has **one month or thirty (30) days**, whichever is longer, to file a request for reconsideration of this patent term adjustment calculation. See 35 U.S.C. 154(b)(3)(B)(ii) and 37 CFR 1.322(a)(4). No extensions of time will be granted under 37 CFR 1.136.

Patentee should use document code PET.OP if electronically filing a request for reconsideration of this patent term adjustment calculation. The patentee must also include the information required by 37 CFR 1.705(b)(2) and the fee required by 37 CFR 1.18(e). If patentee does not file a timely request for reconsideration of this patent term adjustment calculation including the information required by 37 CFR 1.705(b)(2) and the fee required by 37 CFR 1.18(e), the USPTO will issue a certificate of correction reflecting the PTA determination noted above.

Patentee should be aware that in order to preserve the right to review in the United States District Court for the District of Columbia of the USPTO patent term adjustment determination, patentee must ensure that he or she also take the steps required under 35 U.S.C. 154(b)(4)(A) in a timely manner. Nothing in the request for recalculation should be construed as providing an alternative time frame for commencing a civil action under 35 U.S.C. 154(b)(4)(A).

Any questions concerning this decision should be directed to the Office of Patent Legal Administration at 571-272-7702.

UNITED STATES PATENT AND TRADEMARK OFFICE

COMMISSIONER FOR PATENTS
UNITED STATES PATENT AND TRADEMARK OFFICE
P.O. BOX 1450
ALEXANDRIA, VA 22313-1450
www.uspto.gov

ABELMAN, FRAYNE & SCHWAB
666 THIRD AVENUE, 10TH FLOOR
NEW YORK NY 10017

COPY MAILED

JAN 16 2007

OFFICE OF PETITIONS

In re Application of :
Sadow :
Application No. 11/488,372 : ON PETITION
Filed: July 17, 2006 :
Attorney Docket No. 207,021 :
For: ADAPTER SYSTEM FOR BATTER-POWERED TOOLS

This is a decision on the petition under 37 CFR 1.10(c), filed November 7, 2006.

The petition under 37 CFR 1.10(c) is **dismissed**.

Petitioner contends that the above-identified application was deposited in the United States Postal Service (USPS) Express Mail service on October 13, 2006 and accordingly requests an October 13, 2006 filing date for the application. Applicant has submitted a copy of Express Mail Receipt No. ER059677114US that shows a USPS postal stamp of "OCT 13 2006" affixed thereto.

The petition is dismissed because petitioner has not provided evidence that Express Mail Receipt No. ER059677114US was listed on the **application** allegedly deposited in Express Mail service on October 13, 2006. The original Utility Patent Application Transmittal lists Express Mail Receipt No. ER059675847US.

Petitioner must provide persuasive evidence that links the application with Express Mail label no. ER059677114US in order to obtain a filing date of October 13, 2006 for the application.

After the mailing of this decision, the application will be forwarded to Technology Center A.U. 2838 for examination in due course. The filing date of July 17, 2006 stands.

Please file any reconsideration petition within two months of the mail date of this decision. No additional fee is required.

Further correspondence with respect to this matter should be addressed as follows:

By mail:
Mail Stop PETITION
Commissioner for Patents
Post Office Box 1450
Alexandria, VA 22313-1450

By hand:
U.S. Patent and Trademark Office
Customer Service Window, Mail Stop Petition
Randolph Building
401 Dulany Street
Alexandria, VA 22314

By FAX: (571) 273-8300 - ATTN: Office of Petitions

Telephone inquiries concerning this matter should be directed to the undersigned at (571) 272-3230.

Shirene Willis Brantley

Shirene Willis Brantley
Senior Petitions Attorney
Office of Petitions

UNITED STATES PATENT AND TRADEMARK OFFICE

Commissioner for Patents
United States Patent and Trademark Office
P.O. Box 1450
Alexandria, VA 22313-1450
www.uspto.gov

ABELMAN, FRAYNE & SCHWAB
666 THIRD AVENUE, 10TH FLOOR
NEW YORK NY 10017

COPY MAILED

APR 27 2007

OFFICE OF PETITIONS

In re Application of :
Sadow :
Application No. 11/488,372 : DECISION GRANTING
Filed: July 17, 2006 : PETITION
Attorney Docket No. 207.021 :

This is a decision on the petition captioned under 37 CFR 1.10(c), requesting that an IDS be considered as filed in the Office on October 13, 2006. The petition will be treated as a petition under 37 CFR 1.181 for clarification of the record.

Petitioner requests the IDS be considered as filed on October 13, 2006 on the basis that the IDS was purportedly deposited with Express Mail Service on October 13, 2006 pursuant to 37 CFR 1.10. While the copy of the Express Mail label receipt No. ER059677114US bears a blank "date-in" field, it also includes a USPS receipt date stamp of October 13, 2006. Petitioner is alleging that the correct date of mailing pursuant to 37 CFR 1.10 is October 13, 2006. The same Express Mail label number also appears on the original IDS in the file.

The evidence presented is convincing that the Express Mail package was entrusted to the USPS on October 13, 2006, as shown by the USPS stamped receipt date. Accordingly, the IDS is entitled to a mail room receipt date of October 13, 2006.

In view of the above, the petition is **GRANTED**.

After the mailing of this decision, the application file will be forwarded to Technology Center G.A.U. 2838 for correction of Office records to show that the IDS's mail room receipt date is October 13, 2006 and for examination in due course.

Telephone inquiries relating to this decision should be directed to the undersigned at (571) 272-3230.

Shirene Willis Brantley
Senior Petitions Attorney
Office of Petitions

UNITED STATES PATENT AND TRADEMARK OFFICE

UNITED STATES DEPARTMENT OF COMMERCE
United States Patent and Trademark Office
Address: COMMISSIONER FOR PATENTS
P.O. Box 1450
Alexandria, Virginia 22313-1450
www.uspto.gov

ABELMAN, FRAYNE & SCHWAB
666 THIRD AVENUE, 10TH FLOOR
NEW YORK, NY 10017

Mail Date: 04/21/2010

Applicant	: Bernard Sadow	: DECISION ON REQUEST FOR
Patent Number	: 7629766	: RECALCULATION of PATENT
Issue Date	: 12/08/2009	: TERM ADJUSTMENT IN VIEW
Appliction No	: 11/488,372	: OF WYETH AND NOTICE OF INTENT TO
Filed	: 07/17/2006	: ISSUE CERTIFICATE OF CORRECTION
		:

The Request for Recalculation is **GRANTED** to the extent indicated.

The patent term adjustment has been determined to be **505** days. The USPTO will *sua sponte* issue a certificate of correction reflecting the amount of PTA days determined by the recalculation.

Prior to the issuance of the certificate of correction, the USPTO will afford patentee an opportunity to be heard and request reconsideration. Accordingly, patentee has **one month or thirty (30) days**, whichever is longer, to file a request for reconsideration of this patent term adjustment calculation. See 35 U.S.C. 154(b)(3)(B)(ii) and 37 CFR 1.322(a)(4). No extensions of time will be granted under 37 CFR 1.136.

Patentee should use document code PET.OP if electronically filing a request for reconsideration of this patent term adjustment calculation. The patentee must also include the information required by 37 CFR 1.705(b)(2) and the fee required by 37 CFR 1.18(e). If patentee does not file a timely request for reconsideration of this patent term adjustment calculation including the information required by 37 CFR 1.705(b)(2) and the fee required by 37 CFR 1.18(e), the USPTO will issue a certificate of correction reflecting the PTA determination noted above.

Patentee should be aware that in order to preserve the right to review in the United States District Court for the District of Columbia of the USPTO patent term adjustment determination, patentee must ensure that he or she also take the steps required under 35 U.S.C. 154(b)(4)(A) in a timely manner. Nothing in the request for recalculation should be construed as providing an alternative time frame for commencing a civil action under 35 U.S.C. 154(b)(4)(A).

Any questions concerning this decision should be directed to the Office of Patent Legal Administration at 571-272-7702.

UNITED STATES PATENT AND TRADEMARK OFFICE

UNITED STATES DEPARTMENT OF COMMERCE
United States Patent and Trademark Office
Address: COMMISSIONER FOR PATENTS
P.O. Box 1450
Alexandria, Virginia 22313-1450
www.uspto.gov

WELLS ST. JOHN P.S.
601 W. FIRST AVENUE, SUITE 1300
SPOKANE, WA 99201

Mail Date: 04/21/2010

Applicant	: Fernando Gonzalez	: DECISION ON REQUEST FOR
Patent Number	: 7602001	: RECALCULATION of PATENT
Issue Date	: 10/13/2009	: TERM ADJUSTMENT IN VIEW
Appliction No	: 11/488,384	: OF WYETH AND NOTICE OF INTENT TO
Filed	: 07/17/2006	: ISSUE CERTIFICATE OF CORRECTION
		:

The Request for Recalculation is **GRANTED** to the extent indicated.

The patent term adjustment has been determined to be **37** days. The USPTO will *sua sponte* issue a certificate of correction reflecting the amount of PTA days determined by the recalculation.

Prior to the issuance of the certificate of correction, the USPTO will afford patentee an opportunity to be heard and request reconsideration. Accordingly, patentee has **one month or thirty (30) days**, whichever is longer, to file a request for reconsideration of this patent term adjustment calculation. See 35 U.S.C. 154(b)(3)(B)(ii) and 37 CFR 1.322(a)(4). No extensions of time will be granted under 37 CFR 1.136.

Patentee should use document code PET.OP if electronically filing a request for reconsideration of this patent term adjustment calculation. The patentee must also include the information required by 37 CFR 1.705(b)(2) and the fee required by 37 CFR 1.18(e). If patentee does not file a timely request for reconsideration of this patent term adjustment calculation including the information required by 37 CFR 1.705(b)(2) and the fee required by 37 CFR 1.18(e), the USPTO will issue a certificate of correction reflecting the PTA determination noted above.

Patentee should be aware that in order to preserve the right to review in the United States District Court for the District of Columbia of the USPTO patent term adjustment determination, patentee must ensure that he or she also take the steps required under 35 U.S.C. 154(b)(4)(A) in a timely manner. Nothing in the request for recalculation should be construed as providing an alternative time frame for commencing a civil action under 35 U.S.C. 154(b)(4)(A).

Any questions concerning this decision should be directed to the Office of Patent Legal Administration at 571-272-7702.

UNITED STATES PATENT AND TRADEMARK OFFICE

Commissioner for Patents
United States Patent and Trademark Office
P.O. Box 1450
Alexandria, VA 22313-1450
www.uspto.gov

KNOBBE MARTENS OLSON & BEAR LLP
2040 MAIN STREET
FOURTEENTH FLOOR
IRVINE CA 92614

MAILED

JAN 22 2010

OFFICE OF PETITIONS

In re Application of :
Than Nguyen :
Application No. 11/488,395 :
Filed: July 18, 2006 :
Attorney Docket No. CVALVE.027A :

DECISION ON PETITION
TO WITHDRAW
FROM RECORD

This is a decision on the request to withdraw as attorney of record under 37 C.F.R. § 1.36, filed December 15, 2009.

The request is **NOT APPROVED**.

The Office will only accept correspondence address changes to the most current address information provided for the assignee of the entire interest *who properly became of record under 37 CFR 3.71,* or, if no assignee of the entire interest has properly been made of record, the most current address information provided for the first named inventor. 37 CFR 3.71(c) states:

> *An assignee becomes of record either in a national patent application or a reexamination proceeding by filing a statement in compliance with § 3.73(b) that is signed by a party who is authorized to act on behalf of the assignee.*

According to a review of current USPTO records petitioner has not requested the address be changed to a properly recorded assignee or the first listed inventor. Customer Number 77218 is neither the first named inventor nor the assignee who properly became of record under 37 CFR 3.71 As such, all future communications from the Office will continue to be directed to the above-listed address until otherwise notified by applicant.

Currently, there is no outstanding Office action that requires a reply.

Telephone inquires concerning this decision should be directed to the undersigned at (571) 272-7751. All other inquires concerning either the examination or status of the application should be directed to the Technology Center.

Joan Olszewski
Petitions Examiner
Office of Petitions

UNITED STATES PATENT AND TRADEMARK OFFICE

COMMISSIONER FOR PATENTS
UNITED STATES PATENT AND TRADEMARK OFFICE
P.O. BOX 1450
ALEXANDRIA, VA 22313-1450
WWW.USPTO.GOV

Paper No. None

BACHMAN & LAPOINTE, P.C.
900 CHAPEL STREET
SUITE 1201
NEW HAVEN CT 06510

COPY MAILED
SEP 29 2006
OFFICE OF PETITIONS

In re Application of :
Johann Scholler et al. :
Application No. 11/488,410 :
Filing Date: July 17, 2006 : DECISION ON PETITION
Attorney Docket Number: 06-383 : UNDER 37 C.F.R. §1.10(C)
Title of Invention: ELECTRICAL :
PLUG-IN CONNECTION :

This is a decision on the petition filed August 4, 2006 pursuant to 37 C.F.R. §1.10(c), requesting that the present application be accorded a filing date of July 17, 2006.

The present application was deposited on July 17, 2006 with the United States Postal Service (USPS), utilizing the "Express Mail Post Office to Addressee" service of the same. Shortly thereafter, Petitioner received a copy of his postcard receipt, which contained a date stamp of July 18, 2006.

The Office regrets this error.

The application has been accorded a filing date of July 17, 2006. Enclosed with this decision is a copy of the filing receipt which was originally mailed to Applicant on August 23, 2006, indicating that this application has been accorded a filing date of July 17, 2006. It is noted that the filing receipt was mailed subsequent to the filing of this petition, and as such, Petitioner was not in possession of the filing receipt at the time of the filing of this petition.

As such, the petition is **DISMISSED AS MOOT.**

Telephone inquiries regarding *this decision* should be directed to the undersigned at (571) 272-3225[1]. All other inquiries concerning examination procedures or status of the application should be directed to the Technology Center.

Paul Shanoski
Senior Attorney
Office of Petitions
United States Patent and Trademark Office

Encl. Copy of the filing receipt, originally mailed on August 23, 2006.

1 Petitioner will note that all practice before the Office should be in writing, and the action of the Office will be based exclusively on the written record in the Office. See 37 C.F.R. §1.2. As such, Petitioner is reminded that no telephone discussion may be controlling or considered authority for Petitioner's further action(s).

UNITED STATES PATENT AND TRADEMARK OFFICE

UNITED STATES DEPARTMENT OF COMMERCE
United States Patent and Trademark Office
Address: COMMISSIONER FOR PATENTS
P.O. Box 1450
Alexandria, Virginia 22313-1450
www.uspto.gov

APPL NO.	FILING OR 371 (c) DATE	ART UNIT	FIL FEE REC'D	ATTY.DOCKET NO	DRAWINGS	TOT CLMS	IND CLMS
11/488,410	07/17/2006	2833	1000	06-383	3	9	1

CONFIRMATION NO. 8001

34704
BACHMAN & LAPOINTE, P.C.
900 CHAPEL STREET
SUITE 1201
NEW HAVEN, CT 06510

Courtesy Copy

FILING RECEIPT

OC000000020146183

Date Mailed: 08/23/2006

Receipt is acknowledged of this regular Patent Application. It will be considered in its order and you will be notified as to the results of the examination. Be sure to provide the U.S. APPLICATION NUMBER, FILING DATE, NAME OF APPLICANT, and TITLE OF INVENTION when inquiring about this application. Fees transmitted by check or draft are subject to collection. Please verify the accuracy of the data presented on this receipt. **If an error is noted on this Filing Receipt, please mail to the Commissioner for Patents P.O. Box 1450 Alexandria Va 22313-1450. Please provide a copy of this Filing Receipt with the changes noted thereon. If you received a "Notice to File Missing Parts" for this application, please submit any corrections to this Filing Receipt with your reply to the Notice. When the USPTO processes the reply to the Notice, the USPTO will generate another Filing Receipt incorporating the requested corrections (if appropriate).**

Applicant(s)

Johann Scholler, Deggendorf, GERMANY;
Sonja Fredl, Deggendorf, GERMANY;

Power of Attorney: None

Domestic Priority data as claimed by applicant

Foreign Applications

EUROPEAN PATENT OFFICE (EPO) 05 015 503.5 07/16/2005
If Required, Foreign Filing License Granted: 08/22/2006

The country code and number of your priority application, to be used for filing abroad under the Paris Convention, is US11/488,410

Projected Publication Date: To Be Determined - pending completion of Missing Parts

Non-Publication Request: No

Early Publication Request: No

Title

Electrical plug-in connection

Preliminary Class

439

PROTECTING YOUR INVENTION OUTSIDE THE UNITED STATES

Since the rights granted by a U.S. patent extend only throughout the territory of the United States and have no effect in a foreign country, an inventor who wishes patent protection in another country must apply for a patent in a specific country or in regional patent offices. Applicants may wish to consider the filing of an international application under the Patent Cooperation Treaty (PCT). An international (PCT) application generally has the same effect as a regular national patent application in each PCT-member country. The PCT process **simplifies** the filing of patent applications on the same invention in member countries, but **does not result** in a grant of "an international patent" and does not eliminate the need of applicants to file additional documents and fees in countries where patent protection is desired.

Almost every country has its own patent law, and a person desiring a patent in a particular country must make an application for patent in that country in accordance with its particular laws. Since the laws of many countries differ in various respects from the patent law of the United States, applicants are advised to seek guidance from specific foreign countries to ensure that patent rights are not lost prematurely.

Applicants also are advised that in the case of inventions made in the United States, the Director of the USPTO must issue a license before applicants can apply for a patent in a foreign country. The filing of a U.S. patent application serves as a request for a foreign filing license. The application's filing receipt contains further information and guidance as to the status of applicant's license for foreign filing.

Applicants may wish to consult the USPTO booklet, "General Information Concerning Patents" (specifically, the section entitled "Treaties and Foreign Patents") for more information on timeframes and deadlines for filing foreign patent applications. The guide is available either by contacting the USPTO Contact Center at 800-786-9199, or it can be viewed on the USPTO website at http://www.uspto.gov/web/offices/pac/doc/general/index.html.

For information on preventing theft of your intellectual property (patents, trademarks and copyrights), you may wish to consult the U.S. Government website, http://www.stopfakes.gov. Part of a Department of Commerce initiative, this website includes self-help "toolkits" giving innovators guidance on how to protect intellectual property in specific countries such as China, Korea and Mexico. For questions regarding patent enforcement issues, applicants may call the U.S. Government hotline at 1-866-999-HALT (1-866-999-4158).

LICENSE FOR FOREIGN FILING UNDER
Title 35, United States Code, Section 184
Title 37, Code of Federal Regulations, 5.11 & 5.15

GRANTED

The applicant has been granted a license under 35 U.S.C. 184, if the phrase "IF REQUIRED, FOREIGN FILING LICENSE GRANTED" followed by a date appears on this form. Such licenses are issued in all applications where the conditions for issuance of a license have been met, regardless of whether or not a license may be required as set forth in 37 CFR 5.15. The scope and limitations of this license are set forth in 37 CFR 5.15(a) unless an earlier license has been issued under 37 CFR 5.15(b). The license is subject to revocation upon written notification. The date indicated is the effective date of the license, unless an earlier license of similar scope has been granted under 37 CFR 5.13 or 5.14.

This license is to be retained by the licensee and may be used at any time on or after the effective date thereof

unless it is revoked. This license is automatically transferred to any related applications(s) filed under 37 CFR 1.53(d). This license is not retroactive.

The grant of a license does not in any way lessen the responsibility of a licensee for the security of the subject matter as imposed by any Government contract or the provisions of existing laws relating to espionage and the national security or the export of technical data. Licensees should apprise themselves of current regulations especially with respect to certain countries, of other agencies, particularly the Office of Defense Trade Controls, Department of State (with respect to Arms, Munitions and Implements of War (22 CFR 121-128)); the Bureau of Industry and Security, Department of Commerce (15 CFR parts 730-774); the Office of Foreign Assets Control, Department of Treasury (31 CFR Parts 500+) and the Department of Energy.

NOT GRANTED

No license under 35 U.S.C. 184 has been granted at this time, if the phrase "IF REQUIRED, FOREIGN FILING LICENSE GRANTED" DOES NOT appear on this form. Applicant may still petition for a license under 37 CFR 5.12, if a license is desired before the expiration of 6 months from the filing date of the application. If 6 months has lapsed from the filing date of this application and the licensee has not received any indication of a secrecy order under 35 U.S.C. 181, the licensee may foreign file the application pursuant to 37 CFR 5.15(b).

UNITED STATES PATENT AND TRADEMARK OFFICE

Commissioner for Patents
United States Patent and Trademark Office
P.O. Box 1450
Alexandria, VA 22313-1450
www.uspto.gov

DICKE, BILLIG & CZAJA
FIFTH STREET TOWERS
100 SOUTH FIFTH STREET, SUITE 2250
MINNEAPOLIS MN 55402

MAILED

JUN 16 2010

OFFICE OF PETITIONS

In re Application of :
Happ et al. :
Application No.: 11/488422 : ON PETITION
Filing or 371(c) Date: 07/18/2006 :
Attorney Docket Number: :
Q601.182.101/2006P50498US :

This is a decision on the Petition for Revival of an Application for Patent Abandoned Unintentionally Under 37 C.F.R. § 1.137(b), filed March 11, 2010.

This Petition is hereby **granted**.

The above-identified application became abandoned for failure to timely reply to the non-final Office action, mailed October 6, 2009. The Office action set a three (3) period for reply. Extensions of time under 37 CFR 1.136(a) were available. No reply having been received, the application became abandoned on January 7, 2010. A Notice of Abandonment was mailed April 15, 2010.

Applicant files the present petition and includes an Amendment in response to the Office action. The petition satisfies the conditions for revival pursuant to the provisions of 37 CFR 1.137(b) in that (1) the reply in the form of an Amendment is filed with the present petition; (2) the petition fee; and (3) the required statement of unintentional delay. Accordingly, the reply is accepted as having been unintentionally delayed.

This application is being referred to Technology Center Art Unit 2892 for processing of the Amendment filed with the petition in the normal course of business.

Telephone inquiries concerning this decision should be directed to the undersigned at (571) 272-3232.

/Derek L. Woods/

Derek L. Woods
Attorney
Office of Petitions

UNITED STATES PATENT AND TRADEMARK OFFICE

UNITED STATES DEPARTMENT OF COMMERCE
United States Patent and Trademark Office
Address: COMMISSIONER FOR PATENTS
P.O. Box 1450
Alexandria, Virginia 22313-1450
www.uspto.gov

Treyz Law Group
870 Market Street, Suite 984
San Francisco, CA 94102

Mail Date: 05/17/2010

Applicant	: Ali Burney	: DECISION ON REQUEST FOR
Patent Number	: 7644296	: RECALCULATION of PATENT
Issue Date	: 01/05/2010	: TERM ADJUSTMENT IN VIEW
Application No	: 11/488,429	: OF WYETH AND NOTICE OF INTENT TO
Filed	: 07/17/2006	: ISSUE CERTIFICATE OF CORRECTION
		:

The Request for Recalculation is **GRANTED** to the extent indicated.

The patent term adjustment has been determined to be **533** days. The USPTO will *sua sponte* issue a certificate of correction reflecting the amount of PTA days determined by the recalculation.

Prior to the issuance of the certificate of correction, the USPTO will afford patentee an opportunity to be heard and request reconsideration. Accordingly, patentee has **one month or thirty (30) days**, whichever is longer, to file a request for reconsideration of this patent term adjustment calculation. See 35 U.S.C. 154(b)(3)(B)(ii) and 37 CFR 1.322(a)(4). No extensions of time will be granted under 37 CFR 1.136.

Patentee should use document code PET.OP if electronically filing a request for reconsideration of this patent term adjustment calculation. The patentee must also include the information required by 37 CFR 1.705(b)(2) and the fee required by 37 CFR 1.18(e). If patentee does not file a timely request for reconsideration of this patent term adjustment calculation including the information required by 37 CFR 1.705(b)(2) and the fee required by 37 CFR 1.18(e), the USPTO will issue a certificate of correction reflecting the PTA determination noted above.

Patentee should be aware that in order to preserve the right to review in the United States District Court for the District of Columbia of the USPTO patent term adjustment determination, patentee must ensure that he or she also take the steps required under 35 U.S.C. 154(b)(4)(A) in a timely manner. Nothing in the request for recalculation should be construed as providing an alternative time frame for commencing a civil action under 35 U.S.C. 154(b)(4)(A).

Any questions concerning this decision should be directed to the Office of Patent Legal Administration at 571-272-7702.

UNITED STATES PATENT AND TRADEMARK OFFICE

UNITED STATES DEPARTMENT OF COMMERCE
United States Patent and Trademark Office
Address: COMMISSIONER FOR PATENTS
P.O. Box 1450
Alexandria, Virginia 22313-1450
www.uspto.gov

KNOBBE MARTENS OLSON & BEAR LLP
2040 MAIN STREET
FOURTEENTH FLOOR
IRVINE, CA 92614

Mail Date: 04/20/2010

Applicant	: Sang-Hun Oh	: DECISION ON REQUEST FOR
Patent Number	: 7576482	: RECALCULATION of PATENT
Issue Date	: 08/18/2009	: TERM ADJUSTMENT IN VIEW
Appliction No	: 11/488,433	: OF WYETH AND NOTICE OF INTENT TO
Filed	: 07/17/2006	: ISSUE CERTIFICATE OF CORRECTION
		:

The Request for Recalculation is **GRANTED** to the extent indicated.

The patent term adjustment has been determined to be **56** days. The USPTO will *sua sponte* issue a certificate of correction reflecting the amount of PTA days determined by the recalculation.

Prior to the issuance of the certificate of correction, the USPTO will afford patentee an opportunity to be heard and request reconsideration. Accordingly, patentee has **one month or thirty (30) days**, whichever is longer, to file a request for reconsideration of this patent term adjustment calculation. See 35 U.S.C. 154(b)(3)(B)(ii) and 37 CFR 1.322(a)(4). No extensions of time will be granted under 37 CFR 1.136.

Patentee should use document code PET.OP if electronically filing a request for reconsideration of this patent term adjustment calculation. The patentee must also include the information required by 37 CFR 1.705(b)(2) and the fee required by 37 CFR 1.18(e). If patentee does not file a timely request for reconsideration of this patent term adjustment calculation including the information required by 37 CFR 1.705(b)(2) and the fee required by 37 CFR 1.18(e), the USPTO will issue a certificate of correction reflecting the PTA determination noted above.

Patentee should be aware that in order to preserve the right to review in the United States District Court for the District of Columbia of the USPTO patent term adjustment determination, patentee must ensure that he or she also take the steps required under 35 U.S.C. 154(b)(4)(A) in a timely manner. Nothing in the request for recalculation should be construed as providing an alternative time frame for commencing a civil action under 35 U.S.C. 154(b)(4)(A).

Any questions concerning this decision should be directed to the Office of Patent Legal Administration at 571-272-7702.

UNITED STATES PATENT AND TRADEMARK OFFICE

UNITED STATES DEPARTMENT OF COMMERCE
United States Patent and Trademark Office
Address: COMMISSIONER FOR PATENTS
P.O. Box 1450
Alexandria, Virginia 22313-1450
www.uspto.gov

Huawei Technologies Co., Ltd.
c/o LEASON ELLIS
81 Main Street, Suite 503
White Plains, NY 10601

Mail Date: 04/30/2010

Applicant	: Xiaoqin Duan	: DECISION ON REQUEST FOR
Patent Number	: 7623874	: RECALCULATION of PATENT
Issue Date	: 11/24/2009	: TERM ADJUSTMENT IN VIEW
Application No	: 11/488,444	: OF WYETH AND NOTICE OF INTENT TO
Filed	: 07/17/2006	: ISSUE CERTIFICATE OF CORRECTION
		:

The Request for Recalculation is **GRANTED** to the extent indicated.

The patent term adjustment has been determined to be **658** days. The USPTO will *sua sponte* issue a certificate of correction reflecting the amount of PTA days determined by the recalculation.

Prior to the issuance of the certificate of correction, the USPTO will afford patentee an opportunity to be heard and request reconsideration. Accordingly, patentee has **one month or thirty (30) days**, whichever is longer, to file a request for reconsideration of this patent term adjustment calculation. See 35 U.S.C. 154(b)(3)(B)(ii) and 37 CFR 1.322(a)(4). No extensions of time will be granted under 37 CFR 1.136.

Patentee should use document code PET.OP if electronically filing a request for reconsideration of this patent term adjustment calculation. The patentee must also include the information required by 37 CFR 1.705(b)(2) and the fee required by 37 CFR 1.18(e). If patentee does not file a timely request for reconsideration of this patent term adjustment calculation including the information required by 37 CFR 1.705(b)(2) and the fee required by 37 CFR 1.18(e), the USPTO will issue a certificate of correction reflecting the PTA determination noted above.

Patentee should be aware that in order to preserve the right to review in the United States District Court for the District of Columbia of the USPTO patent term adjustment determination, patentee must ensure that he or she also take the steps required under 35 U.S.C. 154(b)(4)(A) in a timely manner. Nothing in the request for recalculation should be construed as providing an alternative time frame for commencing a civil action under 35 U.S.C. 154(b)(4)(A).

Any questions concerning this decision should be directed to the Office of Patent Legal Administration at 571-272-7702.

UNITED STATES PATENT AND TRADEMARK OFFICE

UNITED STATES DEPARTMENT OF COMMERCE
United States Patent and Trademark Office
Address: COMMISSIONER FOR PATENTS
P.O. Box 1450
Alexandria, Virginia 22313-1450
www.uspto.gov

STMicroelectronics Inc.
c/o WOLF, GREENFIELD & SACKS, P.C.
600 Atlantic Avenue
BOSTON, MA 02210-2206

Mail Date: 04/20/2010

Applicant	: Filippo Marino	: DECISION ON REQUEST FOR
Patent Number	: 7656140	: RECALCULATION of PATENT
Issue Date	: 02/02/2010	: TERM ADJUSTMENT IN VIEW
Appliction No	: 11/488,452	: OF WYETH AND NOTICE OF INTENT TO
Filed	: 07/18/2006	: ISSUE CERTIFICATE OF CORRECTION
		:

The Request for Recalculation is **GRANTED** to the extent indicated.

The patent term adjustment has been determined to be **136** days. The USPTO will *sua sponte* issue a certificate of correction reflecting the amount of PTA days determined by the recalculation.

Prior to the issuance of the certificate of correction, the USPTO will afford patentee an opportunity to be heard and request reconsideration. Accordingly, patentee has **one month or thirty (30) days**, whichever is longer, to file a request for reconsideration of this patent term adjustment calculation. See 35 U.S.C. 154(b)(3)(B)(ii) and 37 CFR 1.322(a)(4). No extensions of time will be granted under 37 CFR 1.136.

Patentee should use document code PET.OP if electronically filing a request for reconsideration of this patent term adjustment calculation. The patentee must also include the information required by 37 CFR 1.705(b)(2) and the fee required by 37 CFR 1.18(e). If patentee does not file a timely request for reconsideration of this patent term adjustment calculation including the information required by 37 CFR 1.705(b)(2) and the fee required by 37 CFR 1.18(e), the USPTO will issue a certificate of correction reflecting the PTA determination noted above.

Patentee should be aware that in order to preserve the right to review in the United States District Court for the District of Columbia of the USPTO patent term adjustment determination, patentee must ensure that he or she also take the steps required under 35 U.S.C. 154(b)(4)(A) in a timely manner. Nothing in the request for recalculation should be construed as providing an alternative time frame for commencing a civil action under 35 U.S.C. 154(b)(4)(A).

Any questions concerning this decision should be directed to the Office of Patent Legal Administration at 571-272-7702.

UNITED STATES PATENT AND TRADEMARK OFFICE

Commissioner for Patents
United States Patent and Trademark Office
P.O. Box 1450
Alexandria, VA 22313-1450
www.uspto.gov

COPY MAILED

AUG 12 2009

OFFICE OF PETITIONS

FOLEY & LARDNER LLP
975 PAGE MILL ROAD
PALO ALTO CA 94304

In re Application of

ZHU, Bing-Yan et al.
Application No. 11/488,455
Filed: July 17, 2006
Attorney Docket No. **070545-1129**

DECISION ON PETITION
TO WITHDRAW
FROM RECORD

This is a decision on the Request to Withdraw as attorney or agent of record under 37 C.F.R. § 1.36(b), filed July 14, 2009.

The request is **APPROVED**.

A grantable request to withdraw as attorney/agent of record must be signed by every attorney/agent seeking to withdraw or contain a clear indication that one attorney is signing on behalf of another/others. The Office requires the practitioner(s) requesting withdrawal to certify that he, she, or they have: (1) given reasonable notice to the client, prior to the expiration of the response period, that the practitioner(s) intends to withdraw from employment; (2) delivered to the client or a duly authorized representative of the client all papers and property (including funds) to which the client is entitled; and (3) notified the client of any responses that may be due and the time frame within which the client must respond, pursuant 37 CFR 10.40(c).

The request was signed by Antoinette Konski on behalf of all attorneys of record who are associated with customer No. 38706. All attorneys/agents associated with the Customer Number 38706 have been withdrawn. Applicant is reminded that there is no attorney of record at this time.

All future correspondence will be directed to the first named inventor Bing Zhu at the address indicated below.

Telephone inquiries concerning this decision should be directed to Tredelle Jackson at 571-272-2783.

Tredelle D. Jackson
Paralegal Specialist
Office of Petitions

cc: **BIG-YAN ZHU**
135 LOIS LANE
PALO ALTO CA 94303

UNITED STATES PATENT AND TRADEMARK OFFICE

UNITED STATES DEPARTMENT OF COMMERCE
United States Patent and Trademark Office
Address: COMMISSIONER FOR PATENTS
P.O. Box 1450
Alexandria, Virginia 22313-1450
www.uspto.gov

CESARI AND MCKENNA, LLP
88 BLACK FALCON AVENUE
BOSTON, MA 02210

Mail Date: 05/06/2010

Applicant	: Roger Martin	: DECISION ON REQUEST FOR
Patent Number	: 7651153	: RECALCULATION of PATENT
Issue Date	: 01/26/2010	: TERM ADJUSTMENT IN VIEW
Application No	: 11/488,483	: OF WYETH AND NOTICE OF INTENT TO
Filed	: 07/18/2006	: ISSUE CERTIFICATE OF CORRECTION
		:

The Request for Recalculation is **GRANTED** to the extent indicated.

The patent term adjustment has been determined to be **514** days. The USPTO will *sua sponte* issue a certificate of correction reflecting the amount of PTA days determined by the recalculation.

Prior to the issuance of the certificate of correction, the USPTO will afford patentee an opportunity to be heard and request reconsideration. Accordingly, patentee has **one month or thirty (30) days**, whichever is longer, to file a request for reconsideration of this patent term adjustment calculation. See 35 U.S.C. 154(b)(3)(B)(ii) and 37 CFR 1.322(a)(4). No extensions of time will be granted under 37 CFR 1.136.

Patentee should use document code PET.OP if electronically filing a request for reconsideration of this patent term adjustment calculation. The patentee must also include the information required by 37 CFR 1.705(b)(2) and the fee required by 37 CFR 1.18(e). If patentee does not file a timely request for reconsideration of this patent term adjustment calculation including the information required by 37 CFR 1.705(b)(2) and the fee required by 37 CFR 1.18(e), the USPTO will issue a certificate of correction reflecting the PTA determination noted above.

Patentee should be aware that in order to preserve the right to review in the United States District Court for the District of Columbia of the USPTO patent term adjustment determination, patentee must ensure that he or she also take the steps required under 35 U.S.C. 154(b)(4)(A) in a timely manner. Nothing in the request for recalculation should be construed as providing an alternative time frame for commencing a civil action under 35 U.S.C. 154(b)(4)(A).

Any questions concerning this decision should be directed to the Office of Patent Legal Administration at 571-272-7702.

UNITED STATES PATENT AND TRADEMARK OFFICE

UNITED STATES DEPARTMENT OF COMMERCE
United States Patent and Trademark Office
Address: COMMISSIONER FOR PATENTS
P.O. Box 1450
Alexandria, Virginia 22313-1450
www.uspto.gov

WOOD, PHILLIPS, KATZ, CLARK & MORTIMER
500 W. MADISON STREET
SUITE 3800
CHICAGO, IL 60661

Mail Date: 04/21/2010

Applicant	: Craig J. Helton	: DECISION ON REQUEST FOR
Patent Number	: 7611173	: RECALCULATION of PATENT
Issue Date	: 11/03/2009	: TERM ADJUSTMENT IN VIEW
Appliction No	: 11/488,485	: OF WYETH AND NOTICE OF INTENT TO
Filed	: 07/18/2006	: ISSUE CERTIFICATE OF CORRECTION
		:

The Request for Recalculation is **GRANTED** to the extent indicated.

The patent term adjustment has been determined to be **326** days. The USPTO will *sua sponte* issue a certificate of correction reflecting the amount of PTA days determined by the recalculation.

Prior to the issuance of the certificate of correction, the USPTO will afford patentee an opportunity to be heard and request reconsideration. Accordingly, patentee has **one month or thirty (30) days**, whichever is longer, to file a request for reconsideration of this patent term adjustment calculation. See 35 U.S.C. 154(b)(3)(B)(ii) and 37 CFR 1.322(a)(4). No extensions of time will be granted under 37 CFR 1.136.

Patentee should use document code PET.OP if electronically filing a request for reconsideration of this patent term adjustment calculation. The patentee must also include the information required by 37 CFR 1.705(b)(2) and the fee required by 37 CFR 1.18(e). If patentee does not file a timely request for reconsideration of this patent term adjustment calculation including the information required by 37 CFR 1.705(b)(2) and the fee required by 37 CFR 1.18(e), the USPTO will issue a certificate of correction reflecting the PTA determination noted above.

Patentee should be aware that in order to preserve the right to review in the United States District Court for the District of Columbia of the USPTO patent term adjustment determination, patentee must ensure that he or she also take the steps required under 35 U.S.C. 154(b)(4)(A) in a timely manner. Nothing in the request for recalculation should be construed as providing an alternative time frame for commencing a civil action under 35 U.S.C. 154(b)(4)(A).

Any questions concerning this decision should be directed to the Office of Patent Legal Administration at 571-272-7702.

UNITED STATES PATENT AND TRADEMARK OFFICE

UNITED STATES DEPARTMENT OF COMMERCE
United States Patent and Trademark Office
Address: COMMISSIONER FOR PATENTS
P.O. Box 1450
Alexandria, Virginia 22313-1450
www.uspto.gov

WOOD, PHILLIPS, KATZ, CLARK & MORTIMER
500 W. MADISON STREET
SUITE 3800
CHICAGO, IL 60661

Mail Date: 05/18/2010

Applicant : Craig J. Helton
Patent Number : 7611173
Issue Date : 11/03/2009
Application No: 11/488,485
Filed : 07/18/2006

: NOTICE CONCERNING IMPROPER
: CALCULATION OF PATENT TERM
: ADJUSTMENT BASED UPON USPTO
: IMPROPERLY MEASURING REDUCTION
: PERIOD UNDER 37 CFR 1.704(c)(10).

The United States Patent and Trademark Office (USPTO) discovered that in processing the recent recalculation decisions mailed in response to patentee's filed Request for Recalculation of Patent Term Adjustment in view of Wyeth, the USPTO improperly measured the reduction period for reductions under 37 CFR 1.704(c)(10). Pursuant to 37 CFR 1.704(c)(10), patentee's reduction begins on the date of filing the amendment under 37 CFR 1.312 ("1.312 amendment") or other related paper and ends on the date that the Office mails a response to the filing of the 1.312 amendment or other paper. It has been discovered that during the recalculation, the calculation failed to the limit the reduction to the mail date of the response to the 1.312 amendment or other paper. Accordingly, patentee's reductions were greater than warranted.

This notice **VACATES** the previous GRANTED request for recalculation and provides patentee with a revised GRANTED recalculation.

The patent term adjustment has been determined to be **431** days. The USPTO will *sua sponte* issue a certificate of correction reflecting the amount of patent term adjustment (PTA) days determined by the recalculation.

Prior to the issuance of the certificate of correction, the USPTO will afford patentee an opportunity to be heard and request reconsideration. Accordingly, patentee has **one month or thirty (30) days** from the mail date of this notice, whichever is longer, to file a request for reconsideration of this PTA calculation. See 35 U.S.C. § 154(b)(3)(B)(ii) and 37 CFR 1.322(a)(4).

Patentee should use document code PET.OP if electronically filing a request for reconsideration of this PTA calculation. The patentee must also include the information required by 37 CFR 1.705(b)(2), and the fee required by 37 CFR 1.18(e). If patentee does not file a timely request for reconsideration of this PTA calculation, including the information required by 37 CFR 1.705(b)(2) and the fee required by 37 CFR 1.18(e), the USPTO will issue a certificate of correction reflecting the PTA determination noted above.

Patentee should be aware that in order to preserve the right of review of the USPTO's PTA determination in the United States District Court for the District of Columbia, patentee must ensure that the steps required under 35 U.S.C. § 154 (b)(4) are taken in a timely manner. Nothing in the request for recalculation should be construed as providing an alternative time frame for commencing a civil action under 35 U.S.C. § 154(b)(4).

UNITED STATES PATENT AND TRADEMARK OFFICE

Commissioner for Patents
United States Patent and Trademark Office
P.O. Box 1450
Alexandria, VA 22313-1450
www.uspto.gov

MAILED

APR 20 2009

OFFICE OF PETITIONS

K & L GATES LLP
FOUR EMBARCADERO CENTER
SUITE 1200
SAN FRANCISCO CA 94111

In re Application of
Jhon Jhy Liaw
Application No. 11/488,501
Filed: July 18, 2006
Attorney Docket No. TSMC2006-0107

: DECISION DISMISSING PETITION
: UNDER 37 CFR 1.313(a)

This is a decision on the petition filed April 16, 2009, which is being treated under 37 CFR 1.313(a), requesting withdrawal of the above-identified application from issue.

The petition is **dismissed** as moot for the reasons stated below.

A review of the file record discloses that a Notice of Allowance and Fee(s) Due was mailed on February 9, 2009, with the issue fee being due on or before May 11, 2009. The issue fee in this case has not been paid.

The filing of a petition under 37 CFR 1.313(a) is unnecessary, since the mere filing of an RCE and submission will effectively withdraw an application from issue prior to payment of the issue fee. In view thereof, the petition to withdraw from issue is dismissed as involving a moot issue. *Note* MPEP §§ 706.07(h)(IX) and 1308.

Inquiries concerning this decision may be directed to the undersigned at (571) 272-3208.

The matter is being referred to Technology Center AU 2815 for appropriate processing of the RCE filed April 16, 2009, and for consideration of the concurrently filed IDS.

/Karen Creasy/
Karen Creasy
Petitions Examiner
Office of Petitions

UNITED STATES PATENT AND TRADEMARK OFFICE

Commissioner for Patents
United States Patent and Trademark Office
P.O. Box 1450
Alexandria, VA 22313-1450
www.uspto.gov

TIMOTHY F. MILLS
1177 WEST LOOP SOUTH
SUITE 400
HOUSTON, TX 77027-9012

COPY MAILED
NOV 26 2008

In re Application of
William Earl Juergen
Application No. 11/488,527
Filed: July 18, 2006
Attorney Docket No. JUEW.100US

ON PETITION

This is a decision in response to the petition, filed July 22, 2008, to revive the above-identified application under the provisions of 37 CFR 1.137(b).

The petition is **DISMISSED** because it is unsigned. It appears that the petition was intended to be electronically signed by Mr. Timothy F. Mills, an attorney registered to practice before the U.S. Patent and Trademark Office, but, is not signed in accordance with 37 CFR 1.4.

Further, a grantable petition under 37 CFR 1.137(b) must be accompanied by: (1) the required reply, unless previously filed; (2) the petition fee as set forth in 37 CFR 1.17(m); (3) a statement that the entire delay in filing the required reply from the due date for the reply until the filing of a grantable petition pursuant to 37 CFR 1.137(b) was unintentional; and (4) any terminal disclaimer (and fee as set forth in 37 CFR 1.20(d)) required by 37 CFR 1.137(c). 711.03(c)(II)(C) and (D).

While the petition includes a proposed reply and the requisite petition fee, it lacks a proper unintentional delay statement, since the petition containing the statement of unintentional delay is not signed.

This decision is made without prejudice to reconsideration. However, any request for reconsideration must be submitted within TWO (2) MONTHS from the mail date of this decision. Extensions of time under 37 CFR 1.136(a) are permitted. The reconsideration request should include a cover letter entitled "Renewed Petition under 37 CFR 1.137(b)" and a ratification of omissions noted above.

Further correspondence with respect to this matter should be addressed as follows:

By mail: Mail Stop PETITION
Commissioner for Patents
Post Office Box 1450
Alexandria, VA 22313-1450

By hand: U.S. Patent and Trademark Office
Customer Service Window, Mail Stop PETITION
Randolph Building
401 Dulany Street
Alexandria, VA 22314

The centralized facsimile number is **(571) 273-8300**.

Any questions concerning this matter may be directed to the undersigned at (571) 272-3204.

Sherry D. Brinkley
Petitions Examiner
Office of Petitions

UNITED STATES PATENT AND TRADEMARK OFFICE

Commissioner for Patents
United States Patent and Trademark Office
P.O. Box 1450
Alexandria, VA 22313-1450
www.uspto.gov

COPY MAILED

MAR 31 2009

OFFICE OF PETITIONS

TIMOTHY F. MILLS
1177 WEST LOOP SOUTH
SUITE 400
HOUSTON, TX 77027-9012

In re Application of
William E. Juergen
Application No. 11/488,527
Filed: May 30, 2007
Attorney Docket No. JUEW.100US

ON PETITION

This is a decision in response to the renewed petition, filed January 26, 2009, to revive the above-identified application under the provisions of 37 CFR 1.137(b).

The petition is **GRANTED**.

The application became abandoned for failure to reply in a timely manner to the non-final Office action mailed December 3, 2007, which set a shortened statutory period for reply of three (3) months. No extension of time under the provisions of 37 CFR 1.136(a) was obtained. Accordingly, the application became abandoned on March 4, 2008. A Notice of Abandonment was mailed on June 23, 2008.

The petition satisfies the conditions for revival pursuant to the provisions of 37 CFR 1.137(b) in that petitioner has supplied (1) a proposed reply in the form of an amendment; (2) the petition fee of $770; and (3) an adequate statement of unintentional delay.

The application is being referred to Technology Center AU 3671 for appropriate action by the Examiner in the normal course of business on the response filed January 26, 2009.

Telephone inquiries concerning this decision should be directed to the undersigned at (571) 272-3204. Inquiries relating to further prosecution should be directed to the Technology Center.

Sherry D. Brinkley
Petitions Examiner
Office of Petitions

IFW

RECEIVED
CENTRAL FAX CENTER

JUL 22 2008

To:	UNITED STATES PATENT OF	**From:**	Attorney Timothy F Mills
Fax:	15712738300	**Pages:**	3
Re:	PETITION TO REVIVE	**Date:**	07/22/2008

Urgent **For Review** **Please Comment** **Please Reply** **For Information**

• Comments:

ATTACHED IS A PETITION TO REVIVE FROM UNINTENTIONAL ABANDONMENT. FILING FEE OF $770.00 TO BE CREDITED FROM $820.00 FEE PAID ON JULY 2, 2008, AND BALANCE REFUNDED BY CHECK.

Adjustment date: 07/24/2008 DALLEN
07/03/2008 INTEFSW 00000574 11488527
01 FC:2254 -820.00 OP

07/24/2008 DALLEN 00000013 11488527
01 FC:2254 770.00 OP

Refund Ref:
07/24/2008 0030058945

Credit Card Refund Total: $50.00

VISA....: XXXXXXXXXXXX1177

Adjustment date: 03/31/2009 CKHLOK
07/24/2008 DALLEN 00000013 11488527
01 FC:2254 -770.00 OP

03/31/2009 CKHLOK 00000004 11488527
01 FC:2453 770.00 OP

UNITED STATES PATENT AND TRADEMARK OFFICE

Commissioner for Patents
United States Patent and Trademark Office
P.O. Box 1450
Alexandria, VA 22313-1450
www.uspto.gov

ONYX PHARMACEUITICALS INC
2100 POWELL STREET
12TH FLOOR
EMERYVILLE CA 94608

COPY MAILED

APR 2 8 2008

OFFICE OF PETITIONS

In re Application of :
Hermiston, et al. :
Application No. 11/488,534 : DECISION ON PETITIONS
Filed: July 17, 2006 :
Attorney Docket No. ONYX-1031-CIP2-DIV1 :

This is a decision on the petition under 37 CFR 1.159, filed June 11, 2007, which is properly treated as a petition under 37 CFR 1.59(b).

The petition to expunge is **DISMISSED**.

Any request for reconsideration of this decision must be submitted within **TWO (2) MONTHS** of the mailing date of this decision.

As set forth in MPEP 724.05, a petition to expunge information unintentionally submitted in an application (other than information forming part of the original disclosure) may be filed under 37 CFR 1.59(b), provided that:

(A) the Office can effect such return prior to the issuance of any patent on the application in issue;

(B) it is stated that the information submitted was unintentionally submitted and the failure to obtain its

return would cause irreparable harm to the party who submitted the information or to the party in interest on whose behalf the information was submitted;

(C) the information has not otherwise been made public;

(D) there is a commitment on the part of the petitioner to retain such information for the period of any patent with regard to which such information is submitted;

(E) it is established to the satisfaction of the Director that the information to be returned is not material information under 37 CFR 1.56; and

(F) the petition fee as set forth in 37 CFR 1.17(g) is included.

The instant petition has not satisfied items (B)-(E) above.

Further correspondence with respect to this matter should be addressed as follows:

By mail: Mail Stop Petitions
Commissioner for Patents
P.O. Box 1450
Alexandria VA 22313-1450

By FAX: (571)273-8300
Attn: Office of Petitions

Telephone inquiries related to this decision should be directed to the undersigned at (571) 272-3219.

Cliff Congo
Petitions Attorney
Office of Petitions

SPE RESPONSE FOR CERTIFICATE OF CORRECTION

Paper No.: —

DATE : 2/22/10

TO SPE OF : ART UNIT 3635

SUBJECT : Request for Certificate of Correction for Appl. No.: 11/488541 Patent No.: 7478982B2

Please respond to this request for a certificate of correction within 7 days.

FOR IFW FILES:

Please review the requested changes/corrections as shown in the **COCIN** document(s) in the IFW application image. No new matter should be introduced, nor should the scope or meaning of the claims be changed.

Please complete the response (see below) and forward the completed response to scanning using document code **COCX**.

FOR PAPER FILES:

Please review the requested changes/corrections as shown in the attached certificate of correction. Please complete this form (see below) and forward it with the file to:

Certificates of Correction Branch (CofC)
Randolph Square – 9D10-A
Palm Location 7580

Virginia Tolbert
Certificates of Correction Branch
571-272-0460

Thank You For Your Assistance

The request for issuing the above-identified correction(s) is hereby:
Note your decision on the appropriate box.

☑ **Approved**	All changes apply.
☐ **Approved in Part**	Specify below which changes do not apply.
☐ **Denied**	State the reasons for denial below.

Comments: _____

3635

PTO/SB/44 (08-07)
Approved for use through 06/31/2010. OMB 0651-0033
U.S. Patent and Trademark Office; U.S. DEPARTMENT OF COMMERCE
Under the Paperwork Reduction Act of 1995, no persons are required to respond to a collection of information unless it displays a valid OMB control number.
(Also Form PTO-1050)

UNITED STATES PATENT AND TRADEMARK OFFICE

CERTIFICATE OF CORRECTION

PATENT NO : 7,478,987 B2

APPLICATION NO: 11/488,541

DATED : January 20, 2009

INVENTOR(S) : Michael L. O'Banion

It is certified that error appears in the above-identified patent and that said Letters Patent is hereby corrected as shown below:

Title Page,
Item (75) Inventors, delete "**Scott Rudolph**, Cockeysville, MD (US); **Richard C Nickels, Jr.**, Hampstead, MD (US); **Robert A Berry**, Mt. Airy, MD (US)"

Column 8,
Line 12, "alone" should be – along --.

MAILING ADDRESS OF SENDER: Christopher M. Brock
Harness, Dickey & Pierce, P.L.C.
P. O. Box 828
Bloomfield Hills, MI 48303

PATENT NO. 7,478,987 B2

No. of additional copies

This collection of information is required by 37 CFR 1.322, 1.323, and 1.324. The information is required to obtain or retain a benefit by the public which is to file (and by the USPTO to process) an application. Confidentiality is governed by 35 U.S.C. 122 and 37 CFR 1.14. This collection is estimated to take 1.0 hour to complete, including gathering, preparing, and submitting the completed application form to the USPTO. Time will vary depending upon the individual case. Any comments on the amount of time you require to complete this form and/or suggestions for reducing this burden, should be sent to the Chief Information Officer, U.S. Patent and Trademark Office, U.S. Department of Commerce, P.O. Box 1450, Alexandria, VA 22313-1450. DO NOT SEND FEES OR COMPLETED FORMS TO THIS ADDRESS. SEND TO: Attention Certificate of Corrections Branch, Commissioner for Patents, P.O. Box 1450, Alexandria, VA 22313-1450.

If you need assistance in completing the form, call 1-800-PTO-9199 and select option 2.

SPE RESPONSE FOR CERTIFICATE OF CORRECTION

DATE : 2/22/10 Paper No.: —

TO SPE OF : ART UNIT 3635

SUBJECT : Request for Certificate of Correction for Appl. No.: 11/488541 Patent No.: 7478987 B2

Please respond to this request for a certificate of correction within 7 days.

FOR IFW FILES:

Please review the requested changes/corrections as shown in the **COCIN** document(s) in the IFW application image. No new matter should be introduced, nor should the scope or meaning of the claims be changed.

Please complete the response (see below) and forward the completed response to scanning using document code **COCX**.

FOR PAPER FILES:

Please review the requested changes/corrections as shown in the attached certificate of correction. Please complete this form (see below) and forward it with the file to:

Certificates of Correction Branch (CofC)
Randolph Square – 9D10-A
Palm Location 7580

Virginia Tolbert
Certificates of Correction Branch
571-272-0460

Thank You For Your Assistance

The request for issuing the above-identified correction(s) is hereby:
Note your decision on the appropriate box.

☑ **Approved**	All changes apply.
☐ **Approved in Part**	Specify below which changes do not apply.
☐ **Denied**	State the reasons for denial below.

Comments: _____

3635

PTO/SB/44 (08-07)
Approved for use through 06/31/2010. OMB 0651-0033
U.S. Patent and Trademark Office; U.S. DEPARTMENT OF COMMERCE
Under the Paperwork Reduction Act of 1995, no persons are required to respond to a collection of information unless it displays a valid OMB control number.
(Also Form PTO-1050)

UNITED STATES PATENT AND TRADEMARK OFFICE

CERTIFICATE OF CORRECTION

PATENT NO : 7,478,987 B2

APPLICATION NO: 11/488,541

DATED : January 20, 2009

INVENTOR(S) : Michael L. O'Banion

It is certified that error appears in the above-identified patent and that said Letters Patent is hereby corrected as shown below:

Title Page,
Item (75) Inventors, delete "**Scott Rudolph**, Cockeysville, MD (US); **Richard C Nickels, Jr.**, Hampstead, MD (US); **Robert A Berry**, Mt. Airy, MD (US)"

Column 8,
Line 12, "alone" should be – along --.

MAILING ADDRESS OF SENDER: Christopher M. Brock
Harness, Dickey & Pierce, P.L.C.
P. O. Box 828
Bloomfield Hills, MI 48303

PATENT NO. 7,478,987 B2

No. of additional copies

This collection of information is required by 37 CFR 1.322, 1.323, and 1.324. The information is required to obtain or retain a benefit by the public which is to file (and by the USPTO to process) an application. Confidentiality is governed by 35 U.S.C. 122 and 37 CFR 1.14. This collection is estimated to take 1.0 hour to complete, including gathering, preparing, and submitting the completed application form to the USPTO. Time will vary depending upon the individual case. Any comments on the amount of time you require to complete this form and/or suggestions for reducing this burden, should be sent to the Chief Information Officer, U.S. Patent and Trademark Office, U.S. Department of Commerce, P.O. Box 1450, Alexandria, VA 22313-1450. DO NOT SEND FEES OR COMPLETED FORMS TO THIS ADDRESS. SEND TO: Attention Certificate of Corrections Branch, Commissioner for Patents, P.O. Box 1450, Alexandria, VA 22313-1450.

If you need assistance in completing the form, call 1-800-PTO-9199 and select option 2.

UNITED STATES PATENT AND TRADEMARK OFFICE

Commissioner for Patents
United States Patent and Trademark Office
P.O. Box 1450
Alexandria, VA 22313-1450
www.uspto.gov

Heller, Ehrman, LLP
4350 La Jolla Village Drive, 7th Floor
San Diego, CA 92122

COPY MAILED

SEP 25 2008

OFFICE OF PETITIONS

In re Application of
Sharon Erickson et al.
Application No. 11/488,545
Filed: July 17, 2006
Attorney Docket No. 39766-0073 A2C1

DECISION ON PETITION
TO WITHDRAW
FROM RECORD

This is a decision on the Request to Withdraw as attorney or agent under 37 C.F.R. § 1.36(b) or 37 C.F.R. § 10.40 filed July 17, 2008.

The request is **APPROVED**.

A grantable request to withdraw as attorney/agent of record must be signed by every attorney/agent seeking to withdraw or contain a clear indication that one attorney is signing on behalf of another/others. The Office requires the practitioner(s) requesting withdrawal to certify that he, she, or they have: (1) given reasonable notice to the client, prior to the expiration of the response period, that the practitioner(s) intends to withdraw from employment; (2) delivered to the client or a duly authorized representative of the client all papers and property (including funds) to which the client is entitled; and (3) notified the client of any responses that may be due and the time frame within which the client must respond, pursuant 37 CFR 10.40(c).

The request was signed by Leslie B. Overman, on behalf of all attorneys/agents associated with customer number 25213. All attorneys/agents associated with customer number 25213 have been withdrawn.

Applicant is reminded that there is no attorney of record at this time.

The correspondence address has been to that of the inventor at the address of record. The address changed is copied below.

The revocation and power of attorney and change of correspondence address filed on September 16, 2008 is not acceptable. A statement under 37 CFR 3.73(b) is not provided setting forth the entire chain of title and reel and frame numbers of this invention from the inventor(s) to the assignee.

Telephone inquiries concerning this decision should be directed to Kimberly Inabinet at 571-272-4618.

Kimberly Inabinet
Petitions Examiner
Office of Petitions

cc: Sharon Erickson
970 Vista Road
Hillsborough, CA 94010

cc: Goodwin Proctor, LLP
Attn: Patent Administrator
135 Commonwealth Drive
Menlo Park, CA 94025-1105

UNITED STATES PATENT AND TRADEMARK OFFICE

UNITED STATES DEPARTMENT OF COMMERCE
United States Patent and Trademark Office
Address: COMMISSIONER FOR PATENTS
P.O. Box 1450
Alexandria, Virginia 22313-1450
www.uspto.gov

APPLICATION NUMBER	FILING OR 371(C) DATE	FIRST NAMED APPLICANT	ATTY. DOCKET NO./TITLE
11/488,545	07/17/2006	Sharon Erickson	39766-0073 A2C1

CONFIRMATION NO. 8692

POWER OF ATTORNEY NOTICE

25213
HELLER EHRMAN LLP
4350 La Jolla Village Drive, 7th Floor
San Diego, CA 92122

OC000000032235627

Date Mailed: 09/23/2008

NOTICE REGARDING CHANGE OF POWER OF ATTORNEY

This is in response to the Power of Attorney filed 07/17/2008.

- The withdrawal as attorney in this application has been accepted. Future correspondence will be mailed to the new address of record. 37 CFR 1.33.

/kainabinet/

Office of Data Management, Application Assistance Unit (571) 272-4000, or (571) 272-4200, or 1-888-786-0101

SPE RESPONSE FOR CERTIFICATE OF CORRECTION

Paper No.: _____

DATE : 02/01/10

TO SPE OF : ART UNIT 1643

SUBJECT : Request for Certificate of Correction for Appl. No 11/488545.: 7575748 B1

Please respond to this request for a certificate of correction within 7 days.

FOR IFW FILES:

Please review the requested changes/corrections as shown in the **COCIN** document(s) in the IFW application image. No new matter should be introduced, nor should the scope or meaning of the claims be changed.

Please complete the response (see below) and forward the completed response to scanning using document code **COCX**.

FOR PAPER FILES:

Please review the requested changes/corrections as shown in the attached certificate of correction. Please complete this form (see below) and forward it with the file to:

Certificates of Correction Branch (CofC)

Should the change(s) Be made?

RoChaun Johnson
Certificates of Correction Branch
571 272-0470

Thank You For Your Assistance

The request for issuing the above-identified correction(s) is hereby:

Note your decision on the appropriate box.

- ☒ **Approved** — **All** changes apply.
- ☐ **Approved in Part** — Specify below which changes **do not** apply.
- ☐ **Denied** — State the reasons for denial below.

Comments: _____

LARRY R. HELMS, PH.D.
SUPERVISORY PATENT EXAMINER

1643

SPE **Art Unit**

UNITED STATES PATENT AND TRADEMARK OFFICE

UNITED STATES DEPARTMENT OF COMMERCE
United States Patent and Trademark Office
Address: COMMISSIONER FOR PATENTS
P.O. Box 1450
Alexandria, Virginia 22313-1450
www.uspto.gov

Siemens Corporation
Intellectual Property Department
170 Wood Avenue South
Iselin, NJ 08830

Mail Date: 05/25/2010

Applicant	: William R. Ryan	: DECISION ON REQUEST FOR
Patent Number	: 7654092	: RECALCULATION of PATENT
Issue Date	: 02/02/2010	: TERM ADJUSTMENT IN VIEW
Application No	: 11/488,562	: OF WYETH AND NOTICE OF INTENT TO
Filed	: 07/18/2006	: ISSUE CERTIFICATE OF CORRECTION
		:

The Request for Recalculation is **GRANTED** to the extent indicated.

The patent term adjustment has been determined to be **755** days. The USPTO will *sua sponte* issue a certificate of correction reflecting the amount of PTA days determined by the recalculation.

Prior to the issuance of the certificate of correction, the USPTO will afford patentee an opportunity to be heard and request reconsideration. Accordingly, patentee has **one month or thirty (30) days**, whichever is longer, to file a request for reconsideration of this patent term adjustment calculation. See 35 U.S.C. 154(b)(3)(B)(ii) and 37 CFR 1.322(a)(4). No extensions of time will be granted under 37 CFR 1.136.

Patentee should use document code PET.OP if electronically filing a request for reconsideration of this patent term adjustment calculation. The patentee must also include the information required by 37 CFR 1.705(b)(2) and the fee required by 37 CFR 1.18(e). If patentee does not file a timely request for reconsideration of this patent term adjustment calculation including the information required by 37 CFR 1.705(b)(2) and the fee required by 37 CFR 1.18(e), the USPTO will issue a certificate of correction reflecting the PTA determination noted above.

Patentee should be aware that in order to preserve the right to review in the United States District Court for the District of Columbia of the USPTO patent term adjustment determination, patentee must ensure that he or she also take the steps required under 35 U.S.C. 154(b)(4)(A) in a timely manner. Nothing in the request for recalculation should be construed as providing an alternative time frame for commencing a civil action under 35 U.S.C. 154(b)(4)(A).

Any questions concerning this decision should be directed to the Office of Patent Legal Administration at 571-272-7702.

UNITED STATES PATENT AND TRADEMARK OFFICE

UNITED STATES DEPARTMENT OF COMMERCE
United States Patent and Trademark Office
Address: COMMISSIONER FOR PATENTS
P.O. Box 1450
Alexandria, Virginia 22313-1450
www.uspto.gov

WELLS ST. JOHN P.S.
601 W. FIRST AVENUE, SUITE 1300
SPOKANE, WA 99201

Mail Date: 04/21/2010

Applicant	: Vishwanath Bhat	: DECISION ON REQUEST FOR
Patent Number	: 7635623	: RECALCULATION of PATENT
Issue Date	: 12/22/2009	: TERM ADJUSTMENT IN VIEW
Appliction No	: 11/488,587	: OF WYETH AND NOTICE OF INTENT TO
Filed	: 07/17/2006	: ISSUE CERTIFICATE OF CORRECTION
		:

The Request for Recalculation is **GRANTED** to the extent indicated.

The patent term adjustment has been determined to be **402** days. The USPTO will *sua sponte* issue a certificate of correction reflecting the amount of PTA days determined by the recalculation.

Prior to the issuance of the certificate of correction, the USPTO will afford patentee an opportunity to be heard and request reconsideration. Accordingly, patentee has **one month or thirty (30) days**, whichever is longer, to file a request for reconsideration of this patent term adjustment calculation. See 35 U.S.C. 154(b)(3)(B)(ii) and 37 CFR 1.322(a)(4). No extensions of time will be granted under 37 CFR 1.136.

Patentee should use document code PET.OP if electronically filing a request for reconsideration of this patent term adjustment calculation. The patentee must also include the information required by 37 CFR 1.705(b)(2) and the fee required by 37 CFR 1.18(e). If patentee does not file a timely request for reconsideration of this patent term adjustment calculation including the information required by 37 CFR 1.705(b)(2) and the fee required by 37 CFR 1.18(e), the USPTO will issue a certificate of correction reflecting the PTA determination noted above.

Patentee should be aware that in order to preserve the right to review in the United States District Court for the District of Columbia of the USPTO patent term adjustment determination, patentee must ensure that he or she also take the steps required under 35 U.S.C. 154(b)(4)(A) in a timely manner. Nothing in the request for recalculation should be construed as providing an alternative time frame for commencing a civil action under 35 U.S.C. 154(b)(4)(A).

Any questions concerning this decision should be directed to the Office of Patent Legal Administration at 571-272-7702.

UNITED STATES PATENT AND TRADEMARK OFFICE

UNITED STATES DEPARTMENT OF COMMERCE
United States Patent and Trademark Office
Address: COMMISSIONER FOR PATENTS
P.O. Box 1450
Alexandria, Virginia 22313-1450
www.uspto.gov

WELLS ST. JOHN P.S.
601 W. FIRST AVENUE, SUITE 1300
SPOKANE, WA 99201

Mail Date: 05/18/2010

Applicant : Vishwanath Bhat
Patent Number : 7635623
Issue Date : 12/22/2009
Application No: 11/488,587
Filed : 07/17/2006

: NOTICE CONCERNING IMPROPER
: CALCULATION OF PATENT TERM
: ADJUSTMENT BASED UPON USPTO
: IMPROPERLY MEASURING REDUCTION
: PERIOD UNDER 37 CFR 1.704(c)(10).

The United States Patent and Trademark Office (USPTO) discovered that in processing the recent recalculation decisions mailed in response to patentee's filed Request for Recalculation of Patent Term Adjustment in view of Wyeth, the USPTO improperly measured the reduction period for reductions under 37 CFR 1.704(c)(10). Pursuant to 37 CFR 1.704(c)(10), patentee's reduction begins on the date of filing the amendment under 37 CFR 1.312 ("1.312 amendment") or other related paper and ends on the date that the Office mails a response to the filing of the 1.312 amendment or other paper. It has been discovered that during the recalculation, the calculation failed to the limit the reduction to the mail date of the response to the 1.312 amendment or other paper. Accordingly, patentee's reductions were greater than warranted.

This notice **VACATES** the previous GRANTED request for recalculation and provides patentee with a revised GRANTED recalculation.

The patent term adjustment has been determined to be **514** days. The USPTO will *sua sponte* issue a certificate of correction reflecting the amount of patent term adjustment (PTA) days determined by the recalculation.

Prior to the issuance of the certificate of correction, the USPTO will afford patentee an opportunity to be heard and request reconsideration. Accordingly, patentee has **one month or thirty (30) days** from the mail date of this notice, whichever is longer, to file a request for reconsideration of this PTA calculation. See 35 U.S.C. § 154(b)(3)(B)(ii) and 37 CFR 1.322(a)(4).

Patentee should use document code PET.OP if electronically filing a request for reconsideration of this PTA calculation. The patentee must also include the information required by 37 CFR 1.705(b)(2), and the fee required by 37 CFR 1.18(e). If patentee does not file a timely request for reconsideration of this PTA calculation, including the information required by 37 CFR 1.705(b)(2) and the fee required by 37 CFR 1.18(e), the USPTO will issue a certificate of correction reflecting the PTA determination noted above.

Patentee should be aware that in order to preserve the right of review of the USPTO's PTA determination in the United States District Court for the District of Columbia, patentee must ensure that the steps required under 35 U.S.C. § 154 (b)(4) are taken in a timely manner. Nothing in the request for recalculation should be construed as providing an alternative time frame for commencing a civil action under 35 U.S.C. § 154(b)(4).

UNITED STATES PATENT AND TRADEMARK OFFICE

UNITED STATES DEPARTMENT OF COMMERCE
United States Patent and Trademark Office
Address: COMMISSIONER FOR PATENTS
P.O. Box 1450
Alexandria, Virginia 22313-1450
www.uspto.gov

OLIFF & BERRIDGE, PLC
P.O. BOX 320850
ALEXANDRIA, VA 22320-4850

Mail Date: 05/21/2010

Applicant	: Keiko Tazaki	: DECISION ON REQUEST FOR
Patent Number	: 7663722	: RECALCULATION of PATENT
Issue Date	: 02/16/2010	: TERM ADJUSTMENT IN VIEW
Application No	: 11/488,591	: OF WYETH AND NOTICE OF INTENT TO
Filed	: 07/19/2006	: ISSUE CERTIFICATE OF CORRECTION
		:

The Request for Recalculation is **GRANTED** to the extent indicated.

The patent term adjustment has been determined to be **732** days. The USPTO will *sua sponte* issue a certificate of correction reflecting the amount of PTA days determined by the recalculation.

Prior to the issuance of the certificate of correction, the USPTO will afford patentee an opportunity to be heard and request reconsideration. Accordingly, patentee has **one month or thirty (30) days**, whichever is longer, to file a request for reconsideration of this patent term adjustment calculation. See 35 U.S.C. 154(b)(3)(B)(ii) and 37 CFR 1.322(a)(4). No extensions of time will be granted under 37 CFR 1.136.

Patentee should use document code PET.OP if electronically filing a request for reconsideration of this patent term adjustment calculation. The patentee must also include the information required by 37 CFR 1.705(b)(2) and the fee required by 37 CFR 1.18(e). If patentee does not file a timely request for reconsideration of this patent term adjustment calculation including the information required by 37 CFR 1.705(b)(2) and the fee required by 37 CFR 1.18(e), the USPTO will issue a certificate of correction reflecting the PTA determination noted above.

Patentee should be aware that in order to preserve the right to review in the United States District Court for the District of Columbia of the USPTO patent term adjustment determination, patentee must ensure that he or she also take the steps required under 35 U.S.C. 154(b)(4)(A) in a timely manner. Nothing in the request for recalculation should be construed as providing an alternative time frame for commencing a civil action under 35 U.S.C. 154(b)(4)(A).

Any questions concerning this decision should be directed to the Office of Patent Legal Administration at 571-272-7702.

UNITED STATES PATENT
AND TRADEMARK OFFICE

Commissioner for Patents
United States Patent and Trademark Office
P.O. Box 1450
Alexandria, VA 22313-1450
www.uspto.g

Date Mailed :December 3, 2007
Patent No. :7,194,237 B2
Ser. No. :11/488595
Inventor(s) :Gary L. Sugar, et al.
Issued :March 20, 2007
Title: SYSTEM AND METHOD FOR MULTIPLE-INPUT MULTIPLE-OUTPUT (MIMO) RADIO COMMUNICATION

Re: Request for Certificate of Correction

Consideration has been given your request for the issuance of a certificate of correction for the above-identified patent under the provisions of Rule(s) 1.322 and/or 1.323.

Assignees' names and addresses (assignment data) printed in a patent, are based *solely* on information supplied in the appropriate space for identifying the assignment data, i.e., item 3 of the Issue Fee Transmittal Form PTOL-85B. Granting of a request under 37 CFR 3.81(b) is required to correct applicant's error providing ***incorrect or erroneous*** assignment data, *before* issuance of a Certificate of Correction, under 37 CFR 1.323 *(see Manual of Patent Examining Procedures (M.P.E.P) Chp.1400, sect. 1481).* This procedure is required *at any time after the issue fee is paid*, including after issuance of the patent.

In view of the foregoing, your request is hereby denied.

A request to correct the Assignee under 37 CFR 3.81(b) should include:

A. **the processing fee set forth in 37 CFR 1.117(h) (currently $130);**
B. a statement that the failure to include the correct assignee name on the PTOL-85B was inadvertent; and
C. a copy of the Notice of Recordation of Assignment Document, reflecting the reel and frame number where the assignment(s) is recorded and/or reflecting proof of *the date* the assignment was submitted for recordation.

In the Request, Applicant(s) may request that the file be forwarded to Certificates of Correction Branch, for issuance of a Certificate of Correction, if the Request is granted.

Any request under 37 CFR 3.81(b) should be directed to the following address or facsimile number:

By mail: Mail Stop PETITIONS
Commissioner for Patents
Post Office Box 1450
Alexandria, VA 22313-1450

By hand: Customer Service Window
Mail Stop Petitions
Randolph Building
401 Dulany Street
Alexandria, VA 22314

By fax: (703) 872-9306
ATTN: Office of Petitions

If a fee (currently $100) was previously submitted for consideration of a Request for Certificate of Correction, under CFR 1.323, to correct assignment data, , no additional fee is required.

Magdalene Talley
For Mary F. Diggs, Supervisor
Decisions & Certificates
of Correction Branch
(703) 308-9390 ext. 116

Litman Law Offices, Ltd.
P.O. Box 15035
Crystal City Station
Arlington, VA 22215

MD/mt

UNITED STATES PATENT AND TRADEMARK OFFICE

MAR 30 2007

Commissioner for Patents
United States Patent and Trademark Office
P.O. Box 1450
Alexandria, VA 22313-1450
www.uspto.gov

MCDERMOTT WILL & EMERY LLP
600 13TH STREET, N.W.
WASHINGTON DC 20005-3096

In re Application of Hidenobu et al Application No. 11/488635 Filed: July 19, 2006 Attorney Docket No. 061352-0132	: : : : : : :	DECISION ON REQUEST TO PARTICIPATE IN PATENT PROSECUTION HIGHWAY PILOT PROGRAM AND PETITION TO MAKE SPECIAL UNDER 37 CFR 1.102(d)

This is a decision on the request to participate in the Patent Prosecution Highway (PPH) pilot program and the petition under 37 CFR 1.102(d), filed January 29, 2007 to make the above-identified application special.

The request and petition are **DISMISSED**.

A grantable request to participate in the PPH pilot program and petition to make special require:

(1) The U.S. application must validly claim priority under 35 U.S.C. 119(a) to one or more applications filed in the JPO;
(2) Applicant must submit a copy of the allowable/patentable claim(s) from the JPO application(s) along with an English translation thereof and a statement that the English translation is accurate;
(3) All the claims in the U.S. application must sufficiently correspond or be amended to sufficiently correspond to the allowable/patentable claim(s) in the JPO application(s);
(4) Examination of the U.S. application has not begun;
(5) Applicant must submit a copy of all the office actions from each of the JPO application(s) containing the allowable/patentable claim(s) along with an English translation thereof and a statement that the English translation is accurate;
(6) Applicant must submit an IDS listing the documents cited by the JPO examiner in the JPO office action along with copies of documents except U.S. patents or U.S. patent application publications; and
(7) The required petition fee under 37 CFR 1.17(h).

The request to participate in the PPH pilot program and petition fails to comply with the requirement because:

Examination of the U.S. application has already begun.

Applicant is given a time period of **ONE MONTH or THIRTY DAYS**, whichever is longer, to correct the deficiencies. **NO EXTENSION OF TIME UNDER 37 CFR 1.136 IS PERMITTED.** If the deficiencies are not corrected with the time period given, the application will await action in its regular turn.

Response must be faxed to Ram R. Shukla at 571-272-8300.

Telephone inquiries concerning this decision should be directed to Ram R. Shukla at 571-272-0735.

All other inquiries concerning the examination or status of the application should be directed to Patent Application Information Retrieval (PAIR) system.

The application is being forwarded to the examiner for action on the merits commensurate with this decision.

Ram R. Shukla, Ph.D.
Supervisory Patent Examiner
TC 1600

RAM R. SHUKLA, PH.D.
SUPERVISORY PATENT EXAMINER

UNITED STATES PATENT AND TRADEMARK OFFICE

UNITED STATES DEPARTMENT OF COMMERCE
United States Patent and Trademark Office
Address: COMMISSIONER FOR PATENTS
P.O. Box 1450
Alexandria, Virginia 22313-1450
www.uspto.gov

ROYLANCE, ABRAMS, BERDO & GOODMAN, L.L.P.
1300 19TH STREET, N.W.
SUITE 600
WASHINGTON,, DC 20036

Mail Date: 05/21/2010

Applicant	: Sung-Jin Park	: DECISION ON REQUEST FOR
Patent Number	: 7656973	: RECALCULATION of PATENT
Issue Date	: 02/02/2010	: TERM ADJUSTMENT IN VIEW
Application No	: 11/488,645	: OF WYETH AND NOTICE OF INTENT TO
Filed	: 07/19/2006	: ISSUE CERTIFICATE OF CORRECTION
		:

The Request for Recalculation is **GRANTED** to the extent indicated.

The patent term adjustment has been determined to be **847** days. The USPTO will *sua sponte* issue a certificate of correction reflecting the amount of PTA days determined by the recalculation.

Prior to the issuance of the certificate of correction, the USPTO will afford patentee an opportunity to be heard and request reconsideration. Accordingly, patentee has **one month or thirty (30) days**, whichever is longer, to file a request for reconsideration of this patent term adjustment calculation. See 35 U.S.C. 154(b)(3)(B)(ii) and 37 CFR 1.322(a)(4). No extensions of time will be granted under 37 CFR 1.136.

Patentee should use document code PET.OP if electronically filing a request for reconsideration of this patent term adjustment calculation. The patentee must also include the information required by 37 CFR 1.705(b)(2) and the fee required by 37 CFR 1.18(e). If patentee does not file a timely request for reconsideration of this patent term adjustment calculation including the information required by 37 CFR 1.705(b)(2) and the fee required by 37 CFR 1.18(e), the USPTO will issue a certificate of correction reflecting the PTA determination noted above.

Patentee should be aware that in order to preserve the right to review in the United States District Court for the District of Columbia of the USPTO patent term adjustment determination, patentee must ensure that he or she also take the steps required under 35 U.S.C. 154(b)(4)(A) in a timely manner. Nothing in the request for recalculation should be construed as providing an alternative time frame for commencing a civil action under 35 U.S.C. 154(b)(4)(A).

Any questions concerning this decision should be directed to the Office of Patent Legal Administration at 571-272-7702.

UNITED STATES PATENT AND TRADEMARK OFFICE

Commissioner for Patents
United States Patent and Trademark Office
P.O. Box 1450
Alexandria, VA 22313-1450
www.uspto.gov

Breiner & Breiner, L.L.C.
P.O. Box 19290
Alexandria VA 22320-0290

COPY MAILED

JAN 31 2007

OFFICE OF PETITIONS

In re Application of
Thomas Dennis Meadows Jr. And James Bryan Berry
Application No. 11/488,650
Filed: July 19, 2006
Attorney Docket No. 6742
Title of Invention: Raphiolepis Indica Plant Named 'Sodark'

DECISION GRANTING STATUS UNDER 37 CFR 1.47(a)

This is in response to the petition under 37 CFR 1.47(a), filed January 8, 2007.

The petition is GRANTED.

Petitioner has shown that non-signing inventor Berry has refused to join in the filing of the above-identified application. The petition attest a copy of the application was sent to the non-signing inventor. Petitioner states the application papers were received by the non-signing inventor. The failure of the inventor to respond with the submission of the executed application papers to the application sufficiently establishes that the non-signing inventor refuses to execute the application papers.

The above-identified application and papers have been reviewed and found in compliance with 37 CFR 1.47(a). This application is hereby accorded Rule 1.47(a) status.

The address of the non-signing inventor provided on the declaration differs from the last known address provided in the petition. Petitioner is required to submit the address where non-signing inventor receives mail via a declaration or an application data sheet.

As provided in Rule 1.47(c), this Office will forward notice of this application's filing to the non-signing inventor at the address given in the petition. Notice of the filing of this application will also be published in the Official Gazette.

This application is being forwarded to the Office of Initial Patent Examination for further processing.

Telephone inquiries related to this decision may be directed to the undersigned at (571) 272-3215.

Charlema R. Grant

Charlema R. Grant
Petitions Attorney
Office of Petitions

UNITED STATES PATENT AND TRADEMARK OFFICE

Commissioner for Patents
United States Patent and Trademark Office
P.O. Box 1450
Alexandria, VA 22313-1450
www.uspto.gov

James B.Berry
J.Berry Nursery
201 PR 5180
Grand Saline, Texas 75140

COPY MAILED

JAN 31 2007

OFFICE OF PETITIONS

In re Application of
Thomas Dennis Meadows Jr. And James Bryan Berry
Application No. 11/488,650
Filed: July 19, 2006
Attorney Docket No. 6742
Title of Invention: Raphiolepis Indica Plant Named 'Sodark'

: LETTER

Dear Mr. Berry :

You are named as a joint inventor in the above-identified United States patent application filed under the provisions of 35 U.S.C. 116 (United States Code) and 37 C.F.R. § 1.47(a), Rules of Practice in Patent Cases. Should a patent be granted on the application you will be designated therein as a joint inventor.

As a named inventor you are entitled to inspect any paper in the file wrapper of the application, order copies of all or any part thereof (at a prepaid cost as per 37 C.F.R. § 1.19) or make your position of record in the application. Alternatively, you may arrange to do any of the preceding through a registered patent attorney or agent presenting written authorization from you. If you care to join the application, applicant (see below) would presumably assist you. Joining in the application would entail the filing of an appropriate oath or declaration by you pursuant to 37 C.F.R. § 1.63.

Telephone inquiries regarding this communication should be directed to Petitions Attorney Charlema R. Grant at (571) 272-3215. Requests for information regarding your application should be directed to the File Information Unit at (703) 308-2733. Information regarding how to pay for and order a copy of the application, or a specific paper in the application, should be directed to Certification Division at (703) 308-9726 or 1-800-972-6382 (outside the Washington D.C. area).

Charlema R. Grant
Petitions Attorney
Office of Petitions

Breiner & Breiner, L.L.C.
P.O. Box 19290
Alexandra VA 22320-0290
ATTN: Theodore Breiner

UNITED STATES PATENT AND TRADEMARK OFFICE

Commissioner for Patents
United States Patent and Trademark Office
P.O. Box 1450
Alexandria, VA 22313-1450
www.uspto.gov

Breiner & Breiner, L.L.C.
P.O. Box 19290
Alexandria VA 22320-0290

COPY MAILED

MAR 2 8 2007

OFFICE OF PETITIONS

In re Application of
Thomas Dennis Meadows Jr. And James Bryan Berry
Application No. 11/488,651
Filed: July 19, 2006
Attorney Docket No. 6743
Title of Invention: Loropetalum Chinensis Variety Rubrum Plant Named 'Shang-hi'

DECISION GRANTING STATUS UNDER 37 CFR 1.47(a)

This is in response to the petition under 37 CFR 1.47(a), filed January 8, 2007.

The petition is GRANTED.

Petitioner has shown that non-signing inventor Berry has refused to join in the filing of the above-identified application. The petition attest a copy of the application was sent to the non-signing inventor. Petitioner states the application papers were received by the non-signing inventor. The failure of the inventor to respond with the submission of the executed application papers to the application sufficiently establishes that the non-signing inventor refuses to execute the application papers.

The above-identified application and papers have been reviewed and found in compliance with 37 CFR 1.47(a). This application is hereby accorded Rule 1.47(a) status.

The address of the non-signing inventor provided on the declaration differs from the last known address provided in the petition. Petitioner is required to submit the address where non-signing inventor receives mail via a declaration or an application data sheet.

As provided in Rule 1.47(c), this Office will forward notice of this application's filing to the non-signing inventor at the address given in the petition. Notice of the filing of this application will also be published in the Official Gazette.

This application is being forwarded to the Office of Initial Patent Examination for further processing.

Telephone inquiries related to this decision may be directed to the undersigned at (571) 272-3215.

Charlema R. Grant

Charlema R. Grant
Petitions Attorney
Office of Petitions

UNITED STATES PATENT AND TRADEMARK OFFICE

Commissioner for Patents
United States Patent and Trademark Office
P.O. Box 1450
Alexandria, VA 22313-1450
www.uspto.gov

James B.Berry
J.Berry Nursery
201 PR 5180
Grand Saline, Texas 75140

In re Application of
Thomas Dennis Meadows Jr. And James Bryan Berry
Application No. 11/488,651
Filed: July 19, 2006
Attorney Docket No. 6743
Title of Invention: Loropetalum Chinensis Variety Rubrum Plant Named 'Shang-hi'

: LETTER

COPY MAILED

MAR 2 8 2007

OFFICE OF PETITIONS

Dear Mr. Berry :

You are named as a joint inventor in the above-identified United States patent application filed under the provisions of 35 U.S.C. 116 (United States Code) and 37 C.F.R. § 1.47(a), Rules of Practice in Patent Cases. Should a patent be granted on the application you will be designated therein as a joint inventor.

As a named inventor you are entitled to inspect any paper in the file wrapper of the application, order copies of all or any part thereof (at a prepaid cost as per 37 C.F.R. § 1.19) or make your position of record in the application. Alternatively, you may arrange to do any of the preceding through a registered patent attorney or agent presenting written authorization from you. If you care to join the application, applicant (see below) would presumably assist you. Joining in the application would entail the filing of an appropriate oath or declaration by you pursuant to 37 C.F.R. § 1.63.

Telephone inquiries regarding this communication should be directed to Petitions Attorney Charlema R. Grant at (571) 272-3215. Requests for information regarding your application should be directed to the File Information Unit at (703) 308-2733. Information regarding how to pay for and order a copy of the application, or a specific paper in the application, should be directed to Certification Division at (703) 308-9726 or 1-800-972-6382 (outside the Washington D.C. area).

Charlema R. Grant

Charlema R. Grant
Petitions Attorney
Office of Petitions

Breiner & Breiner, L.L.C.
P.O. Box 19290
Alexandra VA 22320-0290
ATTN: Theodore Breiner

UNITED STATES PATENT AND TRADEMARK OFFICE

UNITED STATES DEPARTMENT OF COMMERCE
United States Patent and Trademark Office
Address: COMMISSIONER FOR PATENTS
P.O. Box 1450
Alexandria, Virginia 22313-1450
www.uspto.gov

BIRCH STEWART KOLASCH & BIRCH
PO BOX 747
FALLS CHURCH, VA 22040-0747

Mail Date: 04/20/2010

Applicant	: Marc Matthey	: DECISION ON REQUEST FOR
Patent Number	: 7631164	: RECALCULATION of PATENT
Issue Date	: 12/08/2009	: TERM ADJUSTMENT IN VIEW
Appliction No	: 11/488,663	: OF WYETH AND NOTICE OF INTENT TO
Filed	: 07/19/2006	: ISSUE CERTIFICATE OF CORRECTION
		:

The Request for Recalculation is **GRANTED** to the extent indicated.

The patent term adjustment has been determined to be **312** days. The USPTO will *sua sponte* issue a certificate of correction reflecting the amount of PTA days determined by the recalculation.

Prior to the issuance of the certificate of correction, the USPTO will afford patentee an opportunity to be heard and request reconsideration. Accordingly, patentee has **one month or thirty (30) days**, whichever is longer, to file a request for reconsideration of this patent term adjustment calculation. See 35 U.S.C. 154(b)(3)(B)(ii) and 37 CFR 1.322(a)(4). No extensions of time will be granted under 37 CFR 1.136.

Patentee should use document code PET.OP if electronically filing a request for reconsideration of this patent term adjustment calculation. The patentee must also include the information required by 37 CFR 1.705(b)(2) and the fee required by 37 CFR 1.18(e). If patentee does not file a timely request for reconsideration of this patent term adjustment calculation including the information required by 37 CFR 1.705(b)(2) and the fee required by 37 CFR 1.18(e), the USPTO will issue a certificate of correction reflecting the PTA determination noted above.

Patentee should be aware that in order to preserve the right to review in the United States District Court for the District of Columbia of the USPTO patent term adjustment determination, patentee must ensure that he or she also take the steps required under 35 U.S.C. 154(b)(4)(A) in a timely manner. Nothing in the request for recalculation should be construed as providing an alternative time frame for commencing a civil action under 35 U.S.C. 154(b)(4)(A).

Any questions concerning this decision should be directed to the Office of Patent Legal Administration at 571-272-7702.

UNITED STATES PATENT AND TRADEMARK OFFICE

Commissioner for Patents
United States Patent and Trademark Office
P.O. Box 1450
Alexandria, VA 22313-1450
www.uspto.gov

COPY MAILED

JAN 13 2010

Birch Stewart Kolasch & Birch
P.O. Box 747
Falls Church, VA 22040-0747

In re Application of	:	
Chien-Ping Huang et al.	:	
Application No. 11/488,689	:	DECISION ON PETITION
Filed: July 19, 2006	:	
Attorney Docket No. 0698-0240PUS1	:	

This is a decision on the petition under the unintentional provisions of 37 CFR 1.137(b), filed November 5, 2009, to revive the above-identified application.

The petition is **GRANTED**.

This application became abandoned for failure to timely pay the issue and publication fees on or before March 4, 2009, as required by the Notice of Allowance and Fee(s) Due, mailed December 4, 2008. Accordingly, the date of abandonment of this application is March 5, 2009. A Notice of Abandonment was mailed on April 1, 2009.

The petition satisfies the requirements of 37 CFR 1.137(b) in that petitioner has supplied (1) the reply in the form of payment of the issue fee of $1,510 and the publication fee of $300, (2) the petition fee of $1,620, and (3) a proper statement of unintentional delay. Accordingly, the issue and publication fees are accepted as being unintentionally delayed.

The application file does not indicate a change of address has been filed in this case, although the address given on the petition differs from the address of record. A change of address should be filed in this case in accordance with MPEP 601.03. A courtesy copy of this decision is being mailed to the address noted on the petition. However, until otherwise instructed, all future correspondence regarding this application will be mailed solely to the address of record.

Telephone inquiries concerning this decision should be directed to Kimberly Inabinet at (571) 272-4618.

This application is being referred to the Office of Data Management for further processing into a patent.

Carl Friedman
Petitions Examiner
Office of Petitions

cc: Birch, Stewart, Kolasch & Birch, LLP
8110 Gatehouse Road
Suite 100 East
P.O. Box 747
Falls Church, VA 22040-0747

UNITED STATES PATENT AND TRADEMARK OFFICE

Commissioner for Patents
United States Patent and Trademark Office
P.O. Box 1450
Alexandria, VA 22313-1450
www.uspto.gov

PRESTON GATES ELLIS & ROUVELAS MEEDS LLP
1735 NEW YORK AVENUE, NW, SUITE 500
WASHINGTON DC 20006

COPY MAILED
OCT 2 0 2006
OFFICE OF PETITIONS

In re Application of :
MEHTA et al. :
Application No. 11/488,693 : DECISION ON PETITION
Filed: July 19, 2006 : TO MAKE SPECIAL UNDER
Attorney Docket No. 51282-00069 : 37 C.F.R. § 1.102(d)
:

This is a decision on the petition under 37 CFR 1.102(d), filed on August 17, 2006, to make the above-identified application special based on developing treatments and cures for HIV/AIDS or cancer as set forth in M.P.E.P. § 708.02, Section X.

The petition is **GRANTED**.

A grantable petition to make an application special under 37 CFR 1.102(d) and MPEP § 708.02, Section X: Inventions Relating to HIV/AIDS or cancer, must be accompanied by (1) the petition fee under 37 CFR 1.17(h); and (2) a satisfactory statement explaining how the invention contributes to the diagnosis, treatment or prevention of HIV/AIDS or cancer.

The instant petition includes a statement regarding how the application recites a method of the treating cancer by administering compositions of cupredoxins or peptides in a pharmaceutical composition. For example, claim 21 includes a method of treating a mammalian patient suffering from cancer by administering a therapeutically effective amount of composition comprising at least one of cupredoxin or a peptide. Accordingly, the above-identified application will be accorded "special" status, upon completion of the pre-examining process.

Telephone inquiries concerning this decision should be directed to the undersigned at 571-272-4787.

All other inquiries concerning either the examination or status of the application should be directed to the Technology Center.

The application is being referred to the Office of Initial Patent Examination for action on the merits commensurate with this decision.

Denise Pothier
Petitions Examiner
Office of Petitions

UNITED STATES PATENT AND TRADEMARK OFFICE

Commissioner for Patents
United States Patent and Trademark Office
P.O. Box 1450
Alexandria, VA 22313-1450
www.uspto.gov
DIW Nov-07

DON J. PELTO
SHEPPARD, MULLIN, RICHTER & HAMPTON LLP
1300 I STREET, NW
11TH FLOOR
WASHINGTON DC 20006

COPY MAILED

NOV 0 5 2007

OFFICE OF PETITIONS

In re Application of :
Rajeshwari R. Mehta : DECISION GRANTING PETITION
Application No. 11/488,693 : FOR FILING DATE
Filed: July 19, 2006 :
Attorney Docket No. 14PR-129299 :

This is a decision on the petition under 37 CFR 1.53(e), filed May 16, 2007, requesting that this application be accorded a filing date of July 19, 2006.

The petition under 37 CFR 1.53(e) is **granted**.

The application was deposited on July 19, 2007. However, on March 16, 2007, the Office of Initial Patent Examination mailed applicants a "Notice of Incomplete Nonprovisional Application," stating that the application was deposited without drawings and that the filing date of the application will be the date of receipt of the drawings. The Notice also required the submission of an executed oath or declaration covering the items stated to be missing.

In response, the present petition was filed. The petition argues that the drawings stated to have been missing by the Notice of March 16, 2007, were in fact received in the USPTO on filing on July 19, 2006. In support of this assertion, petitioner has supplied a stamped postcard which acknowledges receipt by the USPTO on July 19, 2006, of, *inter alia*, 8 sheets of drawings.

The drawings stated to have been submitted on filing could not be found in the records of the USPTO. However, MPEP 503 states that "A post card receipt which itemizes and properly identifies the papers which are being filed serves as *prima facie* evidence of receipt in the USPTO of all the items listed thereon on the date stamped thereon by the USPTO." Accordingly, the evidence supports the fact that 8 sheets of drawings were in fact present on filing.

Nevertheless, the Notice of March 16, 2007, was improper for the following reason. This application contained, on filing, at least one method, as well as a composition claim, which normally does not require a drawing. It is USPTO policy, per MPEP 601.01(f), to treat such an application under the procedure set forth in MPEP 601.01(g). Under that procedure, rather than mailing a Notice of Incomplete Nonprovisional Application indicating that the lack of drawings precluded the grant of a filing date, the USPTO should have accorded the application papers a filing date of July 19, 2006, and sent a Notice of Omitted items. Accordingly, the Notice mailed March 16, 2007, was mailed in error and is vacated.

Given the basis for granting this petition, the petition fee of $400 is being refunded to deposit account no. 50-1067 as requested.

The Office of Initial Patent Examination (OIPE) has been advised of this decision. Pursuant to this decision, the application has been referred to OIPE for:

- **correction of the filing date to July 19, 2006;**
- **for indication in Office records, as appropriate, that "8" sheets of drawings were present on filing and**
- **for issuance of a filing receipt.**

Telephone inquiries concerning this matter may be directed to the undersigned at 571-272-3208.

Karen Creasy

Karen Creasy
Petitions Examiner
Office of Petitions

UNITED STATES PATENT AND TRADEMARK OFFICE

Commissioner for Patents
United States Patent and Trademark Office
P.O. Box 1450
Alexandria, VA 22313-1450
www.uspto.gov

PRESTON GATES ELLIS & ROUVELAS MEEDS LLP
1735 NEW YORK AVENUE, NW, SUITE 500
WASHINGTON, DC 20006

COPY MAILED

NOV 2 1 2006

OFFICE OF PETITIONS

In re Application of :
Chang Soo Hong et al :
Application No. 11/488,695 : DECISION ON PETITION
Filed: July 19, 2006 : TO MAKE SPECIAL UNDER
Attorney Docket No. 51282-00062 : 37 C.F.R. § 1.102(d)
:

This is a decision on the petition under 37 CFR 1.102(d), filed on August 7, 2006, to make the above-identified application special based on developing treatments and cures for HIV/AIDS or cancer as set forth in M.P.E.P. § 708.02, Section X.

The petition is **GRANTED**.

A grantable petition to make an application special under 37 CFR 1.102(d) and MPEP § 708.02, Section X: Inventions Relating to HIV/AIDS or cancer, must be accompanied by (1) the petition fee under 37 CFR 1.17(h); and (2) a satisfactory statement explaining how the invention contributes to the diagnosis, treatment or prevention of HIV/AIDS or cancer.

The instant petition includes a satisfactory statement. Accordingly, the above-identified application has been accorded "special" status. Telephone inquiries concerning this decision should be directed to Petitions Examiner Irvin Dingle at 571-272-3210.

All other inquiries concerning either the examination or status of the application should be directed to the Technology Center.

The application is being forwarded to the Technology Center Art Unit 1645 for action on the merits commensurate with this decision.

Amelia Au
Petitions Examiner
Office of Petitions

UNITED STATES PATENT AND TRADEMARK OFFICE

UNITED STATES DEPARTMENT OF COMMERCE
United States Patent and Trademark Office
Address: COMMISSIONER FOR PATENTS
P.O. Box 1450
Alexandria, Virginia 22313-1450
www.uspto.gov

APPLICATION NO.	FILING DATE	FIRST NAMED INVENTOR	ATTORNEY DOCKET NO.	CONFIRMATION NO.
11/488,724	07/19/2006	Mitsuru Eida	293959US0	8948

7590 03/16/2009

OBLON, SPIVAK, MCCLELLAND MAIER & NEUSTADT, P.C.
1940 DUKE STREET
ALEXANDRIA, VA 22314

EXAMINER	
HOLLWEG, THOMAS A	

ART UNIT	PAPER NUMBER
2879	

NOTIFICATION DATE	DELIVERY MODE
03/16/2009	ELECTRONIC

DECISION GRANTING PETITION UNDER 37 CFR 1.138(d)

The declaration of express abandonment is recognized

This is in response to the petition under 37 CFR 1.138(d), requesting for a refund of any previously paid search fee and excess claims fee in the above-identified application.

The petition is granted.

The express abandonment is recognized. Any previously paid search fee and excess claims fee are hereby refunded.

Telephone inquiries should be directed to the Office of Data Management at (571) 272-4200.

Patent Publication Branch
Office of Data Management

Adjustment date: 03/12/2009 RPOWELL
07/20/2006 KBETEMA1 00000060 11488724
02 FC:1111 -500.00 OP

Adjustment Date: 03/12/2009 RPOWELL
03/22/2007 MGEBREM1 00000033 041928 11725783
02 FC:1111 500.00 CR
04 FC:1202 200.00 CR

Adjustment date: 03/12/2009 BPOWELL
07/20/2006 KBETEMAI 00000060 11488724
02 FC:1111 -500.00 OP

UNITED STATES PATENT AND TRADEMARK OFFICE

Commissioner for Patents
United States Patent and Trademark Office
P.O. Box 1450
Alexandria, VA 22313-1450
www.uspto.gov

TROXELL LAW OFFICE PLLC
SUITE 1404
5205 LEESBURG PIKE
FALLS CHURCH VA 22041

COPY MAILED

APR 14 2008

OFFICE OF PETITIONS

In re Application of	:	
Ted Ju	:	
Application No. 11/488,741	:	DECISION GRANTING PETITION
Filed: July 19, 2006	:	UNDER 37 CFR 1.137(b)
Attorney Docket No. BHT-3193-35	:	

This is a decision on the petition under 37 CFR 1.137(b), filed August 15, 2007, to revive the above-identified application.

The petition is **GRANTED**.

The petition satisfies the conditions for revival pursuant to the provisions of 37 CFR 1.137(b) in that (1) the reply in the form of an amendment/drawings; (2) the petition fee; and (3) the required statement of unintentional delay have been received. Accordingly, the reply to the Nonfinal Rejection mailed December 18, 2006, is accepted as having been unintentionally delayed.

Telephone inquiries concerning this decision should be directed to the undersigned at (571) 272-3208.

This matter is being referred to Technology Center AU 2839 to consider the reply received August 15, 2007.

Karen Creasy
Petitions Examiner
Office of Petitions

UNITED STATES PATENT AND TRADEMARK OFFICE

Commissioner for Patents
United States Patent and Trademark Office
P.O. Box 1450
Alexandria, VA 22313-1450
www.uspto.gov

Dalina Law Group, P.C.
7910 Ivanhoe Ave., #325
La Jolla, CA 92037

COPY MAILED

NOV 2 1 2007

OFFICE OF PETITIONS

In re Application of :
Alen Capalik :
Application No. 11/488,743 : DECISION ON PETITION
Filed: July 17, 2006 : TO WITHDRAW
Attorney Docket No. 1127-P0002 : FROM RECORD

This is a decision on the Request to Withdraw as attorney or agent of record under 37 C.F.R. § 1.36(b), filed July 3, 2007.

The request is **NOT APPROVED** as moot.

A review of the file record indicates that the power of attorney to Dalina Law Group, P.C. has been revoked by the assignee of the patent application on March 9, 2007. Accordingly, the request to withdraw under 37 C.F.R. § 1.36(b) is moot.

All future communications from the Office will continue to be directed to the below-listed address until otherwise notified by applicant.

Telephone inquires concerning this decision should be directed to Terri Williams at 571-272-2991.

T. Williams

Terri Williams
Petitions Examiner
Office of Petitions

cc: **Morgan, Lewis & Bockius, LLP.**
2 Palo Alto Square
3000 El Camino Real
Palo Alto, CA 94306

UNITED STATES PATENT AND TRADEMARK OFFICE

UNITED STATES DEPARTMENT OF COMMERCE
United States Patent and Trademark Office
Address: COMMISSIONER FOR PATENTS
P.O. Box 1450
Alexandria, Virginia 22313-1450
www.uspto.gov

QUALCOMM INCORPORATED
5775 MOREHOUSE DR.
SAN DIEGO, CA 92121

Mail Date: 08/03/2010

Applicant	: Amer Catovic	: DECISION ON REQUEST FOR
Patent Number	: 7643830	: RECALCULATION of PATENT
Issue Date	: 01/05/2010	: TERM ADJUSTMENT IN VIEW
Application No	: 11/488,745	: OF WYETH AND NOTICE OF INTENT TO
Filed	: 07/17/2006	: ISSUE CERTIFICATE OF CORRECTION
		:

The Request for Recalculation is **GRANTED** to the extent indicated.

The patent term adjustment has been determined to be **705** days. The USPTO will *sua sponte* issue a certificate of correction reflecting the amount of PTA days determined by the recalculation.

Prior to the issuance of the certificate of correction, the USPTO will afford patentee an opportunity to be heard and request reconsideration. Accordingly, patentee has **one month or thirty (30) days**, whichever is longer, to file a request for reconsideration of this patent term adjustment calculation. See 35 U.S.C. 154(b)(3)(B)(ii) and 37 CFR 1.322(a)(4). No extensions of time will be granted under 37 CFR 1.136.

Patentee should use document code PET.OP if electronically filing a request for reconsideration of this patent term adjustment calculation. The patentee must also include the information required by 37 CFR 1.705(b)(2) and the fee required by 37 CFR 1.18(e). If patentee does not file a timely request for reconsideration of this patent term adjustment calculation including the information required by 37 CFR 1.705(b)(2) and the fee required by 37 CFR 1.18(e), the USPTO will issue a certificate of correction reflecting the PTA determination noted above.

Patentee should be aware that in order to preserve the right to review in the United States District Court for the District of Columbia of the USPTO patent term adjustment determination, patentee must ensure that he or she also take the steps required under 35 U.S.C. 154(b)(4)(A) in a timely manner. Nothing in the request for recalculation should be construed as providing an alternative time frame for commencing a civil action under 35 U.S.C. 154(b)(4)(A).

Any questions concerning this decision should be directed to the Office of Patent Legal Administration at 571-272-7702.

UNITED STATES PATENT AND TRADEMARK OFFICE

UNITED STATES DEPARTMENT OF COMMERCE
United States Patent and Trademark Office
Address: COMMISSIONER FOR PATENTS
P.O. Box 1450
Alexandria, Virginia 22313-1450
www.uspto.gov

Patent Department
GE Oil & Gas
4424 West Sam Houston Parkway North
Suite 100
Houston, TX 77041

Mail Date: 04/20/2010

Applicant	: Marc Minassian	: DECISION ON REQUEST FOR
Patent Number	: 7647973	: RECALCULATION of PATENT
Issue Date	: 01/19/2010	: TERM ADJUSTMENT IN VIEW
Appliction No	: 11/488,747	: OF WYETH AND NOTICE OF INTENT TO
Filed	: 07/18/2006	: ISSUE CERTIFICATE OF CORRECTION
		:

The Request for Recalculation is **GRANTED** to the extent indicated.

The patent term adjustment has been determined to be **516** days. The USPTO will *sua sponte* issue a certificate of correction reflecting the amount of PTA days determined by the recalculation.

Prior to the issuance of the certificate of correction, the USPTO will afford patentee an opportunity to be heard and request reconsideration. Accordingly, patentee has **one month or thirty (30) days**, whichever is longer, to file a request for reconsideration of this patent term adjustment calculation. See 35 U.S.C. 154(b)(3)(B)(ii) and 37 CFR 1.322(a)(4). No extensions of time will be granted under 37 CFR 1.136.

Patentee should use document code PET.OP if electronically filing a request for reconsideration of this patent term adjustment calculation. The patentee must also include the information required by 37 CFR 1.705(b)(2) and the fee required by 37 CFR 1.18(e). If patentee does not file a timely request for reconsideration of this patent term adjustment calculation including the information required by 37 CFR 1.705(b)(2) and the fee required by 37 CFR 1.18(e), the USPTO will issue a certificate of correction reflecting the PTA determination noted above.

Patentee should be aware that in order to preserve the right to review in the United States District Court for the District of Columbia of the USPTO patent term adjustment determination, patentee must ensure that he or she also take the steps required under 35 U.S.C. 154(b)(4)(A) in a timely manner. Nothing in the request for recalculation should be construed as providing an alternative time frame for commencing a civil action under 35 U.S.C. 154(b)(4)(A).

Any questions concerning this decision should be directed to the Office of Patent Legal Administration at 571-272-7702.

UNITED STATES PATENT AND TRADEMARK OFFICE

Commissioner for Patents
United States Patent and Trademark Office
P.O. Box 1450
Alexandria, VA 22313-1450
www.uspto.gov

Paper No.

ROSENBERG, KLEIN & LEE
3458 ELLICOTT CENTER DRIVE-
SUITE 101
ELLICOTT CITY MD 21043

COPY MAILED

DEC 0 5 2007

OFFICE OF PETITIONS

In re Application of	:	
Chih-Wei Tsai	:	DECISION REFUSING STATUS
Application No. 11/488,759	:	UNDER 37 C.F.R. § 1.47
Filed: July 19, 2006	:	
Attorney Docket No. MR3517-83	:	

This is a decision on the PETITION TO ACCEPT FILING OF A PATENT APPLICATION IN THE ABSENCE OF INVENTOR'S SIGNATURE UNDER 37 CFR 1.47" filed February 8, 2007.

The above-identified application was filed on July 19, 2006, with an unexecuted declaration. Accordingly, on August 8, 2006, applicants were mailed a "Notice to File Missing Parts of Nonprovisional Application - Filing Date Granted (Notice)," requiring an executed oath or declaration and a surcharge for its late filing. This Notice set a two-month period for reply with extensions of time obtainable under § 1.136(a).

In response, applicants filed a declaration identifying the sole inventor but unexecuted; the surcharge under § 1.16(l); and the instant petition under § 1.47(and fee). Pursuant to the authorization to charge any required fees, the petition fee of $200 (not the $130 expressly authorized) has been charged to petitioner's Deposit Account. The instant response was made timely by an accompanying petition for extension of time within the fourth month (and extension fee). Rule 47 applicant asserts that status under § 1.47(b) is proper because sole inventor Tsai cannot be reached at the last known address.

This petition was submitted by Mitac Technology Corp, presumably as assignee of the subject application.

Pursuant to 37 CFR 3.73(b), a party must be established as the assignee by satisfying the requirements of that subsection, in order to be recognized as an owner or part owner, for purposes of taking action in patent matters before the Office.

§ 3.73 Establishing right of assignee to take action.
(a) The inventor is presumed to be the owner of a patent application, and any patent that may issue therefrom, unless there is an assignment. The original applicant is presumed to be the owner of a trademark application or registration, unless there is an assignment.

(b)(1) In order to request or take action in a patent or trademark matter, the assignee must establish its ownership of the patent or trademark property of paragraph (a) of this section to the satisfaction of the Director. The establishment of ownership by the assignee may be combined with the paper that requests or takes the action. Ownership is established by submitting to the Office a signed statement identifying the assignee, accompanied by either:

(i) Documentary evidence of a chain of title from the original owner to the assignee (e.g., copy of an executed assignment). The documents submitted to establish ownership may be required to be recorded pursuant to § 3.11 in the assignment records of the Office as a condition to permitting the assignee to take action in a matter pending before the Office; or

(ii) A statement specifying where documentary evidence of a chain of title from the original owner to the assignee is recorded in the assignment records of the Office (e.g., reel and frame number).

(2) The submission establishing ownership must show that the person signing the submission is a person authorized to act on behalf of the assignee by:

(i) Including a statement that the person signing the submission is authorized to act on behalf of the assignee; or

(ii) Being signed by a person having apparent authority to sign on behalf of the assignee, e.g., an officer of the assignee.

The action taken by the assignee, and the 37 CFR 3.73(b) submission establishing that the assignee is the appropriate assignee to take such action, can be combined in one paper. The establishment of ownership by the assignee must be submitted prior to, or at the same time as, the paper requesting or taking action is submitted. 37 CFR 3.73(c). If the submission establishing ownership is not present, the action sought to be taken will not be given effect. If the submission establishing ownership is submitted at a later date, that date will be the date of the request for action or the date of the assignee's action taken. See also MPEP 324.

The instant petition was filed by the assignee. However, the assignee has not filed a 3.73(b) statement establishing their right to take action in this application. Nor is such a statement of record in the application.

In view thereof, the petition must be **DISMISSED**.

Rule 47 applicant is given **TWO MONTHS** from the mailing date of this decision to reply, correcting the below-noted deficiencies. Any reply should be entitled "Request for Reconsideration of Petition Under 37 CFR 1.47(a)," and should only address the deficiencies noted below, except that the reply may include an oath or declaration executed by the non-signing inventor. Failure to respond will result in abandonment of the application. Any extensions of time will be governed by 37 CFR 1.136(a).

§1.47(b) provides that:

> Whenever all of the inventors refuse to execute an application for patent, or cannot be found or reached after diligent effort, a person to whom an inventor has assigned or agreed in writing to assign the invention, or who otherwise shows sufficient proprietary interest in the matter justifying such action, may make application for patent on behalf of and as agent for all the inventors. The oath or declaration in such an application must be accompanied by a petition including proof of the pertinent facts, a showing that such action is necessary to preserve

> the rights of the parties or to prevent irreparable damage, the fee set forth in §1.17(h), and the last known address of all of the inventors. An inventor may subsequently join in the application by filing an oath or declaration complying with §1.63.

Thus, in addition to other requirements of law (35 U.S.C. 111(a) and 115), an application deposited pursuant to 37 CFR 1.47(b) must meet the following requirements:

> (A) The 37 CFR 1.47(b) applicant must make the oath required by 37 CFR 1.63 and 1.64 or 1.175. Where a corporation is the 37 CFR 1.47(b) applicant, an officer (President, Vice-President, Secretary, Treasurer, or Chief Executive Officer) thereof should normally sign the necessary oath or declaration. A corporation may authorize any person, including an attorney or agent registered to practice before the U.S. Patent and Trademark Office, to sign the application oath or declaration on its behalf. Where an oath or declaration is signed by a registered attorney or agent on behalf of a corporation, either proof of the attorney's or agent's authority in the form of a statement signed by an appropriate corporate officer must be submitted, or the attorney or agent may simply state that he or she is authorized to sign on behalf of the corporation. Where the oath or declaration is being signed on behalf of an assignee, see MPEP § 324. An inventor may not authorize another individual to act as his or her agent to sign the application oath or declaration on his or her behalf. Staeger v. Commissioner, 189 USPQ 272 (D.D.C. 1976), In re Striker, 182 USPQ 507 (Comm'r Pat. 1973). Where an application is executed by one other than the inventor, the declaration required by 37 CFR 1.63 must state the full name, residence, post office address, and citizenship of the non-signing inventor. Also, the title or position of the person signing must be stated if signing on behalf of a corporation under 37 CFR 1.47(b).
>
> (B) The 37 CFR 1.47(b) applicant must state his or her relationship to the inventor as required by 37 CFR 1.64.

See MPEP 409.03(b).

Accordingly, a grantable petition under 37 CFR §1.47(b) requires: (1) an acceptable oath or declaration in compliance

with 37 C.F.R. §1.63 and 1.64 or 1.175; (2) the rule 47 applicant must state his or her relationship to the inventor as required by 37 C.F.R. §1.64; (3) proof that the non-signing inventor cannot be found or reached after diligent effort, or refuses to sign the oath or declaration after having been presented with the application papers (specification, claims and drawings); (4) the petition fee; (5) a statement of the last known address of the non-signing inventor; (6) that rule 47 applicant make out a prima facie case (i) that the invention has been assigned to him or her or (ii) that the inventor has agreed in writing to assign the invention to him or her or (iii) otherwise demonstrate a proprietary interest in the subject matter of the invention; and (7) rule 47 applicant must prove that the filing of the application is necessary (i) to preserve the rights of the parties or (ii) to prevent irreparable damage.

It is further noted that no declaration executed by the assignee (or anyone else) has been submitted. The only declarations of record are unexecuted. Even if the assignee establishes their right to take action, no petition can be granted until a declaration filed pursuant to 37 CFR 1.47(b) and in compliance with §§1.63 and 1.63 must be submitted before a petition can be granted.

Further correspondence with respect to this matter should be addressed as follows:

By mail:
Mail Stop Petition
Commissioner for Patents
P.O. Box 1450
Alexandria, VA 22313-1450

By FAX:
(571) 273-8300
Attn: Office of Petitions
ATTN: NANCY JOHNSON

By hand:
Customer Service Window
Randolph Building
401 Dulany Street
Alexandria, VA 22314

Telephone inquiries related to this decision may be directed to the undersigned at (571) 272-3219.

Nancy Johnson
Senior Petitions Attorney
Office of Petitions

UNITED STATES PATENT AND TRADEMARK OFFICE

UNITED STATES DEPARTMENT OF COMMERCE
United States Patent and Trademark Office
Address: COMMISSIONER FOR PATENTS
P.O. Box 1450
Alexandria, Virginia 22313-1450
www.uspto.gov

RABIN & Berdo, PC
1101 14TH STREET, NW
SUITE 500
WASHINGTON, DC 20005

Mail Date: 04/21/2010

Applicant	: Keiichi Sando	: DECISION ON REQUEST FOR
Patent Number	: 7647395	: RECALCULATION of PATENT
Issue Date	: 01/12/2010	: TERM ADJUSTMENT IN VIEW
Appliction No	: 11/488,789	: OF WYETH AND NOTICE OF INTENT TO
Filed	: 07/19/2006	: ISSUE CERTIFICATE OF CORRECTION
		:

The Request for Recalculation is **GRANTED** to the extent indicated.

The patent term adjustment has been determined to be **539** days. The USPTO will *sua sponte* issue a certificate of correction reflecting the amount of PTA days determined by the recalculation.

Prior to the issuance of the certificate of correction, the USPTO will afford patentee an opportunity to be heard and request reconsideration. Accordingly, patentee has **one month or thirty (30) days**, whichever is longer, to file a request for reconsideration of this patent term adjustment calculation. See 35 U.S.C. 154(b)(3)(B)(ii) and 37 CFR 1.322(a)(4). No extensions of time will be granted under 37 CFR 1.136.

Patentee should use document code PET.OP if electronically filing a request for reconsideration of this patent term adjustment calculation. The patentee must also include the information required by 37 CFR 1.705(b)(2) and the fee required by 37 CFR 1.18(e). If patentee does not file a timely request for reconsideration of this patent term adjustment calculation including the information required by 37 CFR 1.705(b)(2) and the fee required by 37 CFR 1.18(e), the USPTO will issue a certificate of correction reflecting the PTA determination noted above.

Patentee should be aware that in order to preserve the right to review in the United States District Court for the District of Columbia of the USPTO patent term adjustment determination, patentee must ensure that he or she also take the steps required under 35 U.S.C. 154(b)(4)(A) in a timely manner. Nothing in the request for recalculation should be construed as providing an alternative time frame for commencing a civil action under 35 U.S.C. 154(b)(4)(A).

Any questions concerning this decision should be directed to the Office of Patent Legal Administration at 571-272-7702.

UNITED STATES PATENT AND TRADEMARK OFFICE

Commissioner for Patents
United States Patent and Trademark Office
P.O. Box 1450
Alexandria, VA 22313-1450
www.uspto.gov

COPY MAILED
NOV 29 2006
OFFICE OF PETITIONS

FROMMER LAWRENCE & HAUG
745 FIFTH AVENUE- 10TH FL.
NEW YORK, NY 10151

In re Application of Ho :
Application No. 11/488,809 : Decision on Petition
Filing Date: July 17, 2006 :
Attorney Docket No. 794601-2108 :

This is a decision in response to the petition filed August 24, 2006, requesting, in effect, that Figure 10B filed on August 24, 2006, be entered as part of the original disclosure.

The petition is **granted**.

The application was filed July 17, 2006.

The Office of Initial Patent Examination mailed a "Notice of Omitted Item(s)" on August 8, 2006. The Notice stated Figure 10B did not appear to be part of the application as filed.

In response, the present petition was filed. Petitioner alleges Figure 10B was filed with the original application.

The USPTO file for this application includes only 8 sheets of drawings. The file does not contain the 9 sheets, including the sheet with Figure 10B, petitioner alleges was filed with the original application. However, petitioner has submitted a postcard receipt acknowledging receipt of 9 sheets of drawings on August 24, 2006.[1] Therefore, the Office is persuaded that Figure 10B was part of the originally filed application but was later misplaced by the Office.

The Notice mailed August 8, 2006, was sent in error and is hereby vacated.

The Office will schedule a refund of the $130 submitted with the petition.

The Office of Initial Patent Examination will be informed of the instant decision and will process the application with a filing date of July 17, 2006, using the papers filed July 17, 2006, and the drawing sheet containing Figure 10B, filed August 24, 2006.

---

[1] Evidence of receipt of any correspondence filed in the Patent and Trademark Office can be obtained by submitting a self addressed post card properly itemizing and identifying the paper or papers being filed. Upon receipt of the correspondence, the Patent and Trademark Office will check the listing on the post card against the papers submitted, making sure that all items listed are present and will then stamp the postcard with an Official date stamp and place the post card in the outgoing mail. "A post card receipt which itemizes and properly identifies the papers which are being filed serves as *prima facie* evidence of receipt in the PTO of all items listed thereon by the PTO." M.P.E.P. § 503.

Telephone inquiries regarding this communication should be directed to Petitions Attorney Steven Brantley at (571) 272-3203.

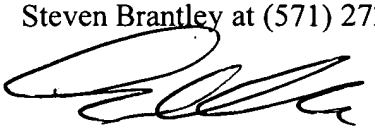

Charles Steven Brantley
Senior Petitions Attorney
Office of Petitions

UNITED STATES PATENT AND TRADEMARK OFFICE

Commissioner for Patents
United States Patent and Trademark Office
P.O. Box 1450
Alexandria, VA 22313-1450
www.uspto.gov

ROSENBERG, KLEIN & LEE
3458 ELLICOTT CENTER DRIVE-SUITE 101
ELLICOTT CITY MD 21043

COPY MAILED

APR 0 4 2007

OFFICE OF PETITIONS

In re Application of :
Tsai : DECISION REFUSING STATUS
Application No. 11/488,821 : UNDER 37 CFR 1.47(b)
Filed: July 19, 2006 :
Atty. Dkt. No.: MR3517-84 :
For: AUDIO PROCESS CIRCUIT :
STRUCTURE AND PROCESS METHOD
THEREOF

This decision is in response to the petition under 37 CFR 1.47(b) filed February 8, 2007

The petition under 37 CFR 1.47(b) is **DISMISSED**.

Petitioners are given TWO MONTHS from the mailing date of this decision to reply, correcting the below-noted deficiencies. Any reply should be entitled "Request for Reconsideration of Petition Under 37 CFR 1.47(b)," and should only address the deficiencies noted herein. The reply under 37 CFR 1.47(b) may include an oath or declaration executed by the non-signing inventors. Any extensions of time will be governed by 37 CFR 1.136(a).

The above-identified application was filed without an executed oath or declaration. Accordingly, a Notice to File Missing Parts of Nonprovisional Application (Notice) was mailed August 11, 2006. The Notice required a surcharge and an executed oath or declaration.

A grantable petition under 37 CFR 1.47(b) requires: (1) proof that the non-signing inventor cannot be reached or refuses to sign the oath or declaration after having been presented with the application papers (specification, claims and drawings); (2) an acceptable oath or declaration in compliance with 35 U.S.C. §§ 115 and 116; (3) the petition fee; (4) a statement of the last known address of the non-signing inventor; (5) proof of proprietary interest; and (6) a showing that such action is required to preserve the rights of the parties or to prevent irreparable damages.

The instant petition fails to satisfy requirements (2), (5), and (6) set forth above.

As to item (2), an acceptable oath or declaration for the patent application in compliance with 37 CFR 1.63 and 1.64 has not been presented. The declaration presented is unacceptable as it has not been properly executed on behalf of the non-signing inventor.

Any renewed petition should be accompanied by a proper oath or declaration wherein the name, address, residence, and citizenship of the inventor is set forth. The declaration should be executed by a corporate officer, such as the president, vice president, secretary, or treasurer of the assignee on behalf of and as agent for the non-signing inventor. The corporate officer's title or position must be identified in the declaration. If an officer is unavailable to execute the declaration, the declaration may be signed on behalf of the corporation by one whose proof of signing authority has been submitted to the Office, such as the corporation's attorney. The signature block of the non-signing inventor should remain unexecuted. *See* MPEP 409.03(b).

As to item (5), petitioner has failed to provide any evidence of a proprietary interest in the instant application. Any renewed petition must be accompanied by evidence to sufficiently establish that (1) that the invention has been assigned to assignee or (2) that the inventor has agreed in writing to assign the invention to assignee or (3) otherwise demonstrate a proprietary interest in the subject matter of the application. *See*, MPEP 409.03(f).

As to item (6), petitioner has failed to present a showing that action under 37 CFR 1.47 is required to preserve the rights of the parties or to prevent irreparable damages. Irreparable damage may be established by a showing in the form of a statement that a filing date is necessary to preserve the rights of the party or to prevent irreparable damage. *See*, MPEP 409.03(g).

Further correspondence with respect to this matter should be addressed as follows:

By mail:
Mail Stop Petition
Commissioner for Patents
P.O. Box 1450
Alexandria, VA 22313-1450

By facsimile:
(571) 273-8300

By hand:
U.S. Patent and Trademark Office
Customer Service Window
Mail Stop Petition
Randolph Building
401 Dulany Street

Alexandria, VA 22314

Telephone inquiries related to this decision may be directed to the undersigned at (571) 272-3205.

Alesia M. Brown
Petitions Attorney
Office of Petitions

UNITED STATES PATENT AND TRADEMARK OFFICE

COMMISSIONER FOR PATENTS
UNITED STATES PATENT AND TRADEMARK OFFICE
P.O. BOX 1450
ALEXANDRIA, VA 22313-1450
www.uspto.gov

ROSENBERG, KLEIN & LEE
3458 ELLICOTT CENTER DRIVE-SUITE 101
ELLICOTT CITY MD 21043

COPY MAILED

JUN 21 2007

OFFICE OF PETITIONS

In re Application of : DECISION REFUSING STATUS
Tsai : UNDER 37 CFR 1.47(b)
Application No. 11/488,821 :
Filed: July 19, 2006 :
Atty. Dkt. No.: MR3517-84 :
For: AUDIO PROCESS CIRCUIT STRUCTURE AND PROCESS METHOD THEREOF :

This decision is in response to the renewed petition under 37 CFR 1.47(b) filed June 4, 2007.

The petition under 37 CFR 1.47(b) is **DISMISSED**.

Petitioner is given TWO MONTHS from the mailing date of this decision to reply, correcting the below-noted deficiencies. Any reply should be entitled "Request for Reconsideration of Petition Under 37 CFR 1.47(b)," and should only address the deficiencies noted herein. The reply under 37 CFR 1.47(b) may include an oath or declaration executed by the non-signing inventors. Any extensions of time will be governed by 37 CFR 1.136(a).

The above-identified application was filed without an executed oath or declaration. Accordingly, a Notice to File Missing Parts of Nonprovisional Application (Notice) was mailed August 11, 2006. The Notice required a surcharge and an executed oath or declaration.

A grantable petition under 37 CFR 1.47(b) requires: (1) proof that the non-signing inventor cannot be reached or refuses to sign the oath or declaration after having been presented with the application papers (specification, claims and drawings); (2) an acceptable oath or declaration in compliance with 35 U.S.C. §§ 115 and 116; (3) the petition fee;(4) a statement of the last known address of the non-signing inventor; (5) proof of proprietary interest; and (6) a showing that such action is required to preserve the rights of the parties or to prevent irreparable damages.

The instant petition fails to satisfy requirements (2) and (5) set forth above.

As to item (2), an acceptable oath or declaration for the patent application in compliance with 37 CFR 1.63 and 1.64 has not been presented. As previously indicated, the declaration presented is unacceptable as it has not been properly executed on behalf of the non-signing inventor.

Any renewed petition should be accompanied by a proper oath or declaration wherein the name, address, residence, and citizenship of the inventor is set forth. The declaration should be executed by a corporate officer, such as the president, vice president, secretary, or treasurer of the assignee on behalf of and as agent for the non-signing inventor. The corporate officer's title or position must be identified in the declaration. If an officer is unavailable to execute the declaration, the declaration may be signed on behalf of the corporation by one whose proof of signing authority has been submitted to the Office, such as the corporation's attorney. The signature block of the non-signing inventor should remain unexecuted. *See* MPEP 409.03(b).

As to item (5), petitioner has failed to establish proprietary interest in the instant application. Any renewed petition must be accompanied by evidence to sufficiently establish that (1) that the invention has been assigned to assignee or (2) that the inventor has agreed in writing to assign the invention to assignee or (3) otherwise demonstrate a proprietary interest in the subject matter of the application.

The declaration of Chang, Hsein Wen, legal project manager, alleges that a court of competent jurisdiction would hold that Mitec International Corporation has the right to apply for the instant patent.

A proprietary interest obtained other than by assignment or agreement to assign may be demonstrated by an appropriate legal memorandum to the effect that a court of competent jurisdiction (federal, state, or foreign) would by the weight of authority in that jurisdiction award title of the invention to the 37 CFR 1.47(b) applicant. The facts in support of any conclusion that a court would award title to the 37 CFR 1.47(b) applicant should be made of record by way of an affidavit or declaration of the person having firsthand knowledge of same. The legal memorandum should be prepared and signed by an attorney at law familiar with the law of the jurisdiction involved. A copy (in the English language) of a statute (if other than the United States statute) or a court decision (if other than a reported decision of a federal court or a decision reported in the United States Patents Quarterly) relied on to demonstrate a proprietary interest should be made of record. *See*, MPEP 409.03(f).

The instant petition fails to meet with the agency standard for establishing proprietary interest. Moreover, there is no prima facie evidence in the record to establish that Declarant Chang is competent to set forth a legal memorandum.

Further correspondence with respect to this matter should be addressed as follows:

By mail:	Mail Stop Petition Commissioner for Patents P.O. Box 1450 Alexandria, VA 22313-1450
By facsimile:	(571) 273-8300
By hand:	U.S. Patent and Trademark Office Customer Service Window Mail Stop Petition Randolph Building 401 Dulany Street Alexandria, VA 22314

Telephone inquiries related to this decision may be directed to the undersigned at (571) 272-3205.

Alesia M. Brown
Petitions Attorney
Office of Petitions

UNITED STATES PATENT AND TRADEMARK OFFICE

COMMISSIONER FOR PATENTS
UNITED STATES PATENT AND TRADEMARK OFFICE
P.O. BOX 1450
ALEXANDRIA, VA 22313-1450
www.uspto.gov

COPY MAILED

DEC 20 2007

OFFICE OF PETITIONS

ROSENBERG, KLEIN & LEE
3458 ELLICOTT CENTER DRIVE-SUITE 101
ELLICOTT CITY MD 21043

In re Application of :
Tsai : DECISION REFUSING STATUS
Application No. 11/488,821 : UNDER 37 CFR 1.47(b)
Filed: July 19, 2006 :
Atty. Dkt. No.: MR3517-84 :
For: AUDIO PROCESS CIRCUIT :
STRUCTURE AND PROCESS METHOD
THEREOF

This decision is in response to the renewed petition under 37 CFR 1.47(b) filed August 20, 2007.

The petition under 37 CFR 1.47(b) is **DISMISSED**.

Petitioner is given TWO MONTHS from the mailing date of this decision to reply, correcting the below-noted deficiencies. Any reply should be entitled "Request for Reconsideration of Petition Under 37 CFR 1.47(b)," and should only address the deficiencies noted herein. The reply under 37 CFR 1.47(b) may include an oath or declaration executed by the non-signing inventors. Any extensions of time will be governed by 37 CFR 1.136(a).

The above-identified application was filed without an executed oath or declaration. Accordingly, a Notice to File Missing Parts of Nonprovisional Application (Notice) was mailed August 11, 2006. The Notice required a surcharge and an executed oath or declaration.

A grantable petition under 37 CFR 1.47(b) requires: (1) proof that the non-signing inventor cannot be reached or refuses to sign the oath or declaration after having been presented with the application papers (specification, claims and drawings); (2) an acceptable oath or declaration in compliance with 35 U.S.C. §§ 115 and 116; (3) the petition fee;(4) a statement of the last known address of the non-signing inventor; (5) proof of proprietary interest; and (6) a showing that such action is required to preserve the rights of the parties or to prevent irreparable damages.

The instant petition fails to satisfy requirement (5) set forth above. Petitioner has failed to establish proprietary interest in

the instant application. Any renewed petition must be accompanied by evidence to sufficiently establish that (1) that the invention has been assigned to assignee or (2) that the inventor has agreed in writing to assign the invention to assignee or (3) otherwise demonstrate a proprietary interest in the subject matter of the application.

As previously indicated, a proprietary interest obtained other than by assignment or agreement to assign may be demonstrated by an appropriate legal memorandum to the effect that a court of competent jurisdiction (federal, state, or foreign) would by the weight of authority in that jurisdiction award title of the invention to the 37 CFR 1.47(b) applicant. The facts in support of any conclusion that a court would award title to the 37 CFR 1.47(b) applicant should be made of record by way of an affidavit or declaration of the person having firsthand knowledge of same. The legal memorandum should be prepared and signed by an attorney at law familiar with the law of the jurisdiction involved. A copy (in the English language) of a statute (if other than the United States statute) or a court decision (if other than a reported decision of a federal court or a decision reported in the United States Patents Quarterly) relied on to demonstrate a proprietary interest should be made of record. *See*, MPEP 409.03(f).

While the instant decision is accompanied by a legal memorandum by an attorney of the relevant jurisdiction, a copy of the statute or court decision (in English) relied upon by the attorney making the legal memorandum has not been submitted.

Any renewed petition must establish proof of proprietary interest as set forth at MPEP 409.03(f).

Further correspondence with respect to this matter should be addressed as follows:

By mail:
Mail Stop Petition
Commissioner for Patents
P.O. Box 1450
Alexandria, VA 22313-1450

By facsimile:
(571) 273-8300

By hand:
U.S. Patent and Trademark Office
Customer Service Window
Mail Stop Petition
Randolph Building
401 Dulany Street
Alexandria, VA 22314

Telephone inquiries related to this decision may be directed to the undersigned at (571) 272-3205.

Alesia M. Brown
Petitions Attorney
Office of Petitions

UNITED STATES PATENT AND TRADEMARK OFFICE

COMMISSIONER FOR PATENTS
UNITED STATES PATENT AND TRADEMARK OFFICE
P.O. BOX 1450
ALEXANDRIA, VA 22313-1450
www.uspto.gov

COPY MAILED

MAR 24 2008

OFFICE OF PETITIONS

ROSENBERG, KLEIN & LEE
3458 ELLICOTT CENTER DRIVE-SUITE 101
ELLICOTT CITY MD 21043

In re Application of :
Tsai : DECISION GRANTING STATUS
Application No. 11/488,821 : UNDER 37 CFR 1.47(b)
Filed: July 19, 2006 :
Atty. Dkt. No.: MR3517-84 :
For: AUDIO PROCESS CIRCUIT :
STRUCTURE AND PROCESS METHOD
THEREOF

This decision is in response to the renewed petition under 37 CFR 1.47(b) filed February 19, 2008.

The petition under 37 CFR 1.47(b) is **GRANTED**.

Petitioner has shown that the non-signing inventor has refused and/or cannot be located to join in the filing of the above-identified application.

The application and papers have been reviewed and found in compliance with 37 CFR 1.47(b). This application is hereby accorded Rule 1.47(b) status.

As provided in 37 CFR 1.47(c), this Office will forward notice of this application's filing to the non-signing inventor at the address given in the petition. Notice of the filing of this application will also be published in the Official Gazette.

This application is being referred to the Office of Initial Patent Examination for pre-examination processing.

Telephone inquiries related to this decision may be directed to the undersigned at (571) 272-3205.

Alesia M. Brown
Petitions Attorney
Office of Petitions

UNITED STATES PATENT AND TRADEMARK OFFICE

COMMISSIONER FOR PATENTS
UNITED STATES PATENT AND TRADEMARK OFFICE
P.O. BOX 1450
ALEXANDRIA, VA 22313-1450
www.uspto.gov

Chih-Wei Tsai
2F.-2, No. 42, Wan-an St.
Wunshan District,
Taipei City 116, Taiwan, R.O.C.

COPY MAILED

MAR 2 4 2008

OFFICE OF PETITIONS

In re Application of
Tsai
Application No. 11/488,821
Filed: July 19, 2006
Atty. Dkt. No.: MR3517-84
For: AUDIO PROCESS CIRCUIT STRUCTURE AND PROCESS METHOD THEREOF

Dear Sir:

You are named as the sole inventor in the above-identified United States patent application, filed under the provisions of 35 U.S.C. 116 (United States Code), and 37 CFR 1.47(b), Rules of Practice in Patent Cases. Should a patent be granted on the application you will be designated therein as the sole inventor.

As a named inventor you are entitled to inspect any paper in the file wrapper of the application, order copies of all or any part thereof (at a prepaid cost per 37 CFR 1.19) or make your position of record in the application. Alternatively, you may arrange to do any of the preceding through a registered patent attorney or agent presenting written authorization from you. If you care to join the application, counsel of record (see below) would presumably assist you. Joining the application would entail the filing of an appropriate oath or declaration by you pursuant to 37 CFR 1.63.

Telephone inquiries regarding this communication should be directed to the undersigned at (571) 272-3205. Requests for information regarding your application should be directed to the File Information Unit at (703) 308-2733. Information regarding how to pay for and order a copy of the application, or a specific paper in the application, should be directed to the Certification Division at (571) 272-3150 or 1 (800) 972-6382 (outside the Washington, DC area).

Alesia M. Brown
Petitions Attorney
Office of Petitions

cc: ROSENBERG, KLEIN & LEE
3458 ELLICOTT CENTER DRIVE-SUITE 101
ELLICOTT CITY MD 21043

UNITED STATES PATENT AND TRADEMARK OFFICE

Commissioner for Patents
United States Patent and Trademark Office
P.O. Box 1450
Alexandria, VA 22313-1450
www.uspto.gov

FITZPATRICK CELLA HARPER & SCINTO
30 ROCKEFELLER PLAZA
NEW YORK, NY 10112

COPY MAILED
DEC 2 4 2008

In re Application of
Yuichi Seki, et al.
Application No. 11/488,834
Filed: July 19, 2006
Attorney Docket No. 03500.018013.1

ON PETITION

This is a decision in response to the petition, filed August 14, 2008, to revive the above-identified application under the provisions of 37 CFR 1.137(b).

The petition is **GRANTED**.

The application became abandoned for failure to reply in a timely manner to the non-final Office action mailed, November 21, 2007, which set a shortened statutory period for reply of three (3) months. No extension of time under the provisions of 37 CFR 1.136(a) was obtained. Accordingly, the application became abandoned on February 22, 2008. A Notice of Abandonment was mailed on July 11, 2008. In response, on August 14, 2008, the present petition was filed.

The petition satisfies the requirements of 37 CFR 1.137(b) in that petitioner has supplied (1) the reply in the form of an amendment; (2) the petition fee of $1,540; and (3) an adequate statement of unintentional delay.

The application is being referred to Technology Center AU 2861 for appropriate action in the normal course of business on the amendment filed September 26, 2008.

Telephone inquiries concerning this decision should be directed to the undersigned at (571) 272-3204. Inquiries relating to further prosecution should be directed to the Technology Center.

Sherry D. Brinkley
Petitions Examiner
Office of Petitions

UNITED STATES PATENT AND TRADEMARK OFFICE

UNITED STATES DEPARTMENT OF COMMERCE
United States Patent and Trademark Office
Address: COMMISSIONER FOR PATENTS
P.O. Box 1450
Alexandria, Virginia 22313-1450
www.uspto.gov

FINNEGAN, HENDERSON, FARABOW, GARRETT & DUNNER LLP
901 NEW YORK AVENUE, NW
WASHINGTON, DC 20001-4413

Mail Date: 04/21/2010

Applicant	: Kumiko Tsukuda	: DECISION ON REQUEST FOR
Patent Number	: 7574129	: RECALCULATION of PATENT
Issue Date	: 08/11/2009	: TERM ADJUSTMENT IN VIEW
Appliction No	: 11/488,865	: OF WYETH AND NOTICE OF INTENT TO
Filed	: 07/19/2006	: ISSUE CERTIFICATE OF CORRECTION
		:

The Request for Recalculation is **GRANTED** to the extent indicated.

The patent term adjustment has been determined to be **369** days. The USPTO will *sua sponte* issue a certificate of correction reflecting the amount of PTA days determined by the recalculation.

Prior to the issuance of the certificate of correction, the USPTO will afford patentee an opportunity to be heard and request reconsideration. Accordingly, patentee has **one month or thirty (30) days**, whichever is longer, to file a request for reconsideration of this patent term adjustment calculation. See 35 U.S.C. 154(b)(3)(B)(ii) and 37 CFR 1.322(a)(4). No extensions of time will be granted under 37 CFR 1.136.

Patentee should use document code PET.OP if electronically filing a request for reconsideration of this patent term adjustment calculation. The patentee must also include the information required by 37 CFR 1.705(b)(2) and the fee required by 37 CFR 1.18(e). If patentee does not file a timely request for reconsideration of this patent term adjustment calculation including the information required by 37 CFR 1.705(b)(2) and the fee required by 37 CFR 1.18(e), the USPTO will issue a certificate of correction reflecting the PTA determination noted above.

Patentee should be aware that in order to preserve the right to review in the United States District Court for the District of Columbia of the USPTO patent term adjustment determination, patentee must ensure that he or she also take the steps required under 35 U.S.C. 154(b)(4)(A) in a timely manner. Nothing in the request for recalculation should be construed as providing an alternative time frame for commencing a civil action under 35 U.S.C. 154(b)(4)(A).

Any questions concerning this decision should be directed to the Office of Patent Legal Administration at 571-272-7702.

UNITED STATES PATENT AND TRADEMARK OFFICE

Commissioner for Patents
United States Patent and Trademark Office
P.O. Box 1450
Alexandria, VA 22313-1450
www.uspto.gov

DICKE, BILLIG & CZAJA
FIFTH STREET TOWERS
100 SOUTH FIFTH STREET,
SUITE 2250
MINNEAPOLIS MN 55402

COPY MAILED

SEP 30 2009

OFFICE OF PETITIONS

In re Application of

Happ, et al. :

Application No. 11/488,869

: DECISION ON PETITION

Filed: July 18, 2006

:

Attorney Docket No.
Q601.154.101/2006P50496US

This is a decision on the petition under 37 CFR 1.137(b), filed August 20, 2009.

The petition is **GRANTED**.

The above-cited application became abandoned for failure to reply in a timely manner to the non-final Office action mailed September 4, 2008, which set a period for reply of three (3) months from its mailing date. No extension of time pursuant to 37 CFR 1.136(a) was obtained within the allowable period. Accordingly, the application became abandoned on December 5, 2008. A Notice of Abandonment was mailed on April 27, 2009.

The amendment filed August 20, 2009, is noted.

The application is being forwarded to Technology Center 2800, GAU 2824 for further processing.

Telephone inquiries concerning this decision should be directed to the undersigned at (571) 272-3222.

Kenya A. McLaughlin
Petitions Attorney
Office of Petitions

UNITED STATES PATENT AND TRADEMARK OFFICE

Commissioner for Patents
United States Patent and Trademark Office
P.O. Box 1450
Alexandria, VA 22313-1450
www.uspto.gov

AT&T CORP.
ONE AT&T WAY, ROOM 2A207
BEDMINSTER, NJ 07921

COPY MAILED

NOV 17 2008

OFFICE OF PETITIONS

In re Application of :
DUFFIELD, et al. :
Application No. 11/488,874 : DECISION GRANTING PETITION
Filed: July 18, 2006 : UNDER 37 CFR 1.313(c)(2)
Attorney Docket No. **2001-0335-CIP-1** :

This is a decision on the petition under 37 CFR 1.313(c)(2), filed November 14, 2008, to withdraw the above-identified application from issue after payment of the issue fee.

The petition is **GRANTED**.

The above-identified application is withdrawn from issue for consideration of a submission under 37 CFR 1.114 (request for continued examination). *See* 37 CFR 1.313(c)(2).

Petitioner is advised that the issue fee paid on October 7, 2008 cannot be refunded. If, however, this application is again allowed, petitioner may request that it be applied towards the issue fee required by the new Notice of Allowance.[1]

The petition is not signed by an attorney of record. Nevertheless, in accordance with 37 CFR 1.134, the signature of Mr. Kin-Wah Tong appearing on the correspondence shall constitute a representation to the United States Patent and Trademark Office that he is authorized to represent the particular party on whose behalf he acts. If Mr. Tong desires to receive future correspondence regarding this file, the appropriate power of attorney documents must be submitted. A courtesy copy of this decision is being mailed to petitioner herein. However, until otherwise instructed, all future correspondence regarding this application will be directed solely to the above-noted correspondence of record.

Telephone inquiries should be directed to the undersigned at (571) 272-7253.

This application is being referred to Technology Center AU 2155 for processing of the request for continued examination under 37 CFR 1.114 and for consideration of the concurrently filed information disclosure statement.

Monica A. Graves
Petitions Examiner
Office of Petitions

Cc: **KIN-WAH TONG**
PATTERSON & SHERIDAN, LLP
595 SHREWSBURY AVENUE, SUITE 100
SHREWSBURY, NJ 07702

---

[1] *The request to apply the issue fee to the new Notice may be satisfied by completing and returning the new Part B – Fee(s) Transmittal Form (along with any balance due at the time of submission). Petitioner is advised that the Issue Fee Transmittal Form must be completed and timely submitted to avoid abandonment of the application.*

UNITED STATES PATENT AND TRADEMARK OFFICE

Commissioner for Patents
United States Patent and Trademark Office
P.O. Box 1450
Alexandria, VA 22313-1450
www.uspto.gov

LEMAIRE PATENT LAW FIRM, P.L.L.C.
P.O. BOX 1818
BURNSVILLE MN 55337

MAILED

APR 0 8 2009

OFFICE OF PETITIONS

In re Application of	:	
Eric C. Honea et al	:	
Application No. 11/488,910	:	DECISION GRANTING PETITION
Filed: July 17, 2006	:	UNDER 37 CFR 1.313(c)(2)
Attorney Docket No. 5032.004US1	:	

This is a decision on the petition under 37 CFR 1.313(c)(2), filed April 6, 2009, to withdraw the above-identified application from issue after payment of the issue fee.

The petition is **GRANTED**.

The above-identified application is withdrawn from issue for consideration of a submission under 37 CFR 1.114 (request for continued examination). *See* 37 CFR 1.313(c)(2).

Petitioner is advised that the issue fee paid on March 27, 2009 cannot be refunded. If, however, this application is again allowed, petitioner may request that it be applied towards the issue fee required by the new Notice of Allowance.[1]

Telephone inquiries should be directed to the undersigned at (571) 272-3208.

This application is being referred to Technology Center AU 2828 for processing of the request for continued examination under 37 CFR 1.114 and for consideration of the concurrently filed amendment.

/Karen Creasy/
Karen Creasy
Petitions Examiner
Office of Petitions

[1] *The request to apply the issue fee to the new Notice may be satisfied by completing and returning the new Part B – Fee(s) Transmittal Form (along with any balance due at the time of submission). Petitioner is advised that the Issue Fee Transmittal Form* ***must*** *be completed and timely submitted to avoid abandonment of the application.*

UNITED STATES PATENT AND TRADEMARK OFFICE

Commissioner for Patents
United States Patent and Trademark Office
P.O. Box 1450
Alexandria, VA 22313-1450
www.uspto.gov

YAHOO! INC.
C/O OSTROW KAUFMAN & FRANKL LLP
THE CHRYSLER BUILDING
405 LEXINGTON AVENUE, 62ND FLOOR
NEW YORK NY 10174

COPY MAILED

SEP 2 4 2009

OFFICE OF PETITIONS

In re Application of
Seth Ostrow et al.
Application No. 11/488,933
Filed: July 17, 2006
Attorney Docket No.: **600189-458**

ON PETITION

This is a decision on the petition filed September 8, 2009 under 37 CFR 1.137(b),[1] to revive the above-identified application.

The petition is **GRANTED**.

This application became abandoned for failure to timely reply to the non-Final Office Action mailed October 29, 2008. A shortened statutory period of three months was set for replying to the non-Final Office Action. No extensions of time having been requested, this application became abandoned January 30, 2009. Accordingly, a Notice of Abandonment was mailed May 26, 2009.

This matter is being referred to Technology Center 2159 for appropriate action on the amendment filed September 8, 2009.

Telephone inquiries concerning this matter should be directed to the undersigned Petitions Attorney at (571) 272-3212.

Patricia Faison-Ball
Senior Petitions Attorney
Office of Petitions

---

[1]Effective December 1, 1997, the provisions of 37 CFR 1.137(b) now provide that where the delay in reply was unintentional, a petition may be filed to revive an abandoned application or a lapsed patent pursuant to 37 CFR 1.137(b). A grantable petition filed under the provisions of 37 CFR 1.137(b) must be accompanied by:

(1) the required reply, unless previously filed. In a nonprovisional application abandoned for failure to prosecute, the required reply may be met by the filing of a continuing application. In a nonprovisional application filed on or after June 8, 1995, and abandoned for failure to prosecute, the required reply may also be met by the filing of a request for continued examination in compliance with § 1.114. In an application or patent, abandoned or lapsed for failure to pay the issue fee or any portion thereof, the required reply must be the payment of the issue fee or any outstanding balance thereof. In an application abandoned for failure to pay the publication fee, the required reply must include payment of the publication fee.

(2) the petition fee as set forth in 37 CFR 1.17(m);

(3) a statement that the entire delay in filing the required reply from the due date for the reply until the filing of a grantable petition pursuant to 37 CFR 1.137(b) was unintentional. The Commissioner may required additional information where there is a question whether the delay was unintentional; and

(4) any terminal disclaimer (and fee as set forth in 37 CFR 1.20(d)) required pursuant to 37 CFR 1.137(c)).

UNITED STATES PATENT AND TRADEMARK OFFICE

UNITED STATES DEPARTMENT OF COMMERCE
United States Patent and Trademark Office
Address: COMMISSIONER FOR PATENTS
P.O. Box 1450
Alexandria, Virginia 22313-1450
www.uspto.gov

GIFFORD, KRASS, SPRINKLE,ANDERSON & CITKOWSKI, P.C
PO BOX 7021
TROY, MI 48007-7021

Mail Date: 04/21/2010

Applicant	: Mike Swain	: DECISION ON REQUEST FOR
Patent Number	: 7576800	: RECALCULATION of PATENT
Issue Date	: 08/18/2009	: TERM ADJUSTMENT IN VIEW
Appliction No	: 11/488,952	: OF WYETH AND NOTICE OF INTENT TO
Filed	: 07/19/2006	: ISSUE CERTIFICATE OF CORRECTION
		:

The Request for Recalculation is **GRANTED** to the extent indicated.

The patent term adjustment has been determined to be **526** days. The USPTO will *sua sponte* issue a certificate of correction reflecting the amount of PTA days determined by the recalculation.

Prior to the issuance of the certificate of correction, the USPTO will afford patentee an opportunity to be heard and request reconsideration. Accordingly, patentee has **one month or thirty (30) days**, whichever is longer, to file a request for reconsideration of this patent term adjustment calculation. See 35 U.S.C. 154(b)(3)(B)(ii) and 37 CFR 1.322(a)(4). No extensions of time will be granted under 37 CFR 1.136.

Patentee should use document code PET.OP if electronically filing a request for reconsideration of this patent term adjustment calculation. The patentee must also include the information required by 37 CFR 1.705(b)(2) and the fee required by 37 CFR 1.18(e). If patentee does not file a timely request for reconsideration of this patent term adjustment calculation including the information required by 37 CFR 1.705(b)(2) and the fee required by 37 CFR 1.18(e), the USPTO will issue a certificate of correction reflecting the PTA determination noted above.

Patentee should be aware that in order to preserve the right to review in the United States District Court for the District of Columbia of the USPTO patent term adjustment determination, patentee must ensure that he or she also take the steps required under 35 U.S.C. 154(b)(4)(A) in a timely manner. Nothing in the request for recalculation should be construed as providing an alternative time frame for commencing a civil action under 35 U.S.C. 154(b)(4)(A).

Any questions concerning this decision should be directed to the Office of Patent Legal Administration at 571-272-7702.

UNITED STATES PATENT AND TRADEMARK OFFICE

UNITED STATES DEPARTMENT OF COMMERCE
United States Patent and Trademark Office
Address: COMMISSIONER FOR PATENTS
P.O. Box 1450
Alexandria, Virginia 22313-1450
www.uspto.gov

KNOBBE MARTENS OLSON & BEAR LLP
2040 MAIN STREET
FOURTEENTH FLOOR
IRVINE, CA 92614

Mail Date: 04/20/2010

Applicant	: Shinya Naitou	: DECISION ON REQUEST FOR
Patent Number	: 7642686	: RECALCULATION of PATENT
Issue Date	: 01/05/2010	: TERM ADJUSTMENT IN VIEW
Appliction No	: 11/488,972	: OF WYETH AND NOTICE OF INTENT TO
Filed	: 07/19/2006	: ISSUE CERTIFICATE OF CORRECTION
		:

The Request for Recalculation is **GRANTED** to the extent indicated.

The patent term adjustment has been determined to be **496** days. The USPTO will *sua sponte* issue a certificate of correction reflecting the amount of PTA days determined by the recalculation.

Prior to the issuance of the certificate of correction, the USPTO will afford patentee an opportunity to be heard and request reconsideration. Accordingly, patentee has **one month or thirty (30) days**, whichever is longer, to file a request for reconsideration of this patent term adjustment calculation. See 35 U.S.C. 154(b)(3)(B)(ii) and 37 CFR 1.322(a)(4). No extensions of time will be granted under 37 CFR 1.136.

Patentee should use document code PET.OP if electronically filing a request for reconsideration of this patent term adjustment calculation. The patentee must also include the information required by 37 CFR 1.705(b)(2) and the fee required by 37 CFR 1.18(e). If patentee does not file a timely request for reconsideration of this patent term adjustment calculation including the information required by 37 CFR 1.705(b)(2) and the fee required by 37 CFR 1.18(e), the USPTO will issue a certificate of correction reflecting the PTA determination noted above.

Patentee should be aware that in order to preserve the right to review in the United States District Court for the District of Columbia of the USPTO patent term adjustment determination, patentee must ensure that he or she also take the steps required under 35 U.S.C. 154(b)(4)(A) in a timely manner. Nothing in the request for recalculation should be construed as providing an alternative time frame for commencing a civil action under 35 U.S.C. 154(b)(4)(A).

Any questions concerning this decision should be directed to the Office of Patent Legal Administration at 571-272-7702.

UNITED STATES PATENT AND TRADEMARK OFFICE

UNITED STATES DEPARTMENT OF COMMERCE
United States Patent and Trademark Office
Address: COMMISSIONER FOR PATENTS
P.O. Box 1450
Alexandria, Virginia 22313-1450
www.uspto.gov

KNOBBE MARTENS OLSON & BEAR LLP
2040 MAIN STREET
FOURTEENTH FLOOR
IRVINE, CA 92614

Mail Date: 05/17/2010

Applicant : Shinya Naitou
Patent Number : 7642686
Issue Date : 01/05/2010
Application No: 11/488,972
Filed : 07/19/2006

: NOTICE CONCERNING IMPROPER
: CALCULATION OF PATENT TERM
: ADJUSTMENT BASED UPON USPTO
: IMPROPERLY MEASURING REDUCTION
: PERIOD UNDER 37 CFR 1.704(c)(10).

The United States Patent and Trademark Office (USPTO) discovered that in processing the recent recalculation decisions mailed in response to patentee's filed Request for Recalculation of Patent Term Adjustment in view of Wyeth, the USPTO improperly measured the reduction period for reductions under 37 CFR 1.704(c)(10). Pursuant to 37 CFR 1.704(c)(10), patentee's reduction begins on the date of filing the amendment under 37 CFR 1.312 ("1.312 amendment") or other related paper and ends on the date that the Office mails a response to the filing of the 1.312 amendment or other paper. It has been discovered that during the recalculation, the calculation failed to the limit the reduction to the mail date of the response to the 1.312 amendment or other paper. Accordingly, patentee's reductions were greater than warranted.

This notice **VACATES** the previous GRANTED request for recalculation and provides patentee with a revised GRANTED recalculation.

The patent term adjustment has been determined to be **597** days. The USPTO will *sua sponte* issue a certificate of correction reflecting the amount of patent term adjustment (PTA) days determined by the recalculation.

Prior to the issuance of the certificate of correction, the USPTO will afford patentee an opportunity to be heard and request reconsideration. Accordingly, patentee has **one month or thirty (30) days** from the mail date of this notice, whichever is longer, to file a request for reconsideration of this PTA calculation. See 35 U.S.C. § 154(b)(3)(B)(ii) and 37 CFR 1.322(a)(4).

Patentee should use document code PET.OP if electronically filing a request for reconsideration of this PTA calculation. The patentee must also include the information required by 37 CFR 1.705(b)(2), and the fee required by 37 CFR 1.18(e). If patentee does not file a timely request for reconsideration of this PTA calculation, including the information required by 37 CFR 1.705(b)(2) and the fee required by 37 CFR 1.18(e), the USPTO will issue a certificate of correction reflecting the PTA determination noted above.

Patentee should be aware that in order to preserve the right of review of the USPTO's PTA determination in the United States District Court for the District of Columbia, patentee must ensure that the steps required under 35 U.S.C. § 154 (b)(4) are taken in a timely manner. Nothing in the request for recalculation should be construed as providing an alternative time frame for commencing a civil action under 35 U.S.C. § 154(b)(4).

UNITED STATES PATENT AND TRADEMARK OFFICE

UNITED STATES DEPARTMENT OF COMMERCE
United States Patent and Trademark Office
Address: COMMISSIONER FOR PATENTS
P.O. Box 1450
Alexandria, Virginia 22313-1450
www.uspto.gov

APPLICATION NO.	FILING DATE	FIRST NAMED INVENTOR	ATTORNEY DOCKET NO.	CONFIRMATION NO.
11/488,984	07/18/2006	John R. Desjarlais	5009-US-02	9217

7590 12/04/2008

XENCOR
111 W. LEMON AVENUE
MONROVIA, CA 91016

EXAMINER	
NEGIN, RUSSELL SCOTT	
ART UNIT	**PAPER NUMBER**
1631	
MAIL DATE	**DELIVERY MODE**
12/04/2008	PAPER

DECISION GRANTING PETITION UNDER 37 CFR 1.138(d)

The declaration of express abandonment is recognized

This is in response to the petition under 37 CFR 1.138(d), requesting for a refund of any previously paid search fee and excess claims fee in the above-identified application.

The petition is granted.

The express abandonment is recognized. Any previously paid search fee and excess claims fee are hereby refunded.

Telephone inquiries should be directed to the Office of Data Management at (571) 272-4200.

Tomi Farmer

Patent Publication Branch
Office of Data Management

Adjustment date: 12/04/2008 NFARMER
07721/2006 HMARZI1 00000045 502319 11488984
02 FC:2111 250.00 CR
04 FC:2203 180.00 CR

UNITED STATES PATENT AND TRADEMARK OFFICE

Commissioner for Patents
United States Patent and Trademark Office
P.O. Box 1450
Alexandria, VA 22313-1450
www.uspto.gov

JOHN J. MARSHALL
DRINKER BIDDLE & REATH LLP
SUITE 300
1000 WESTLAKES DRIVE
BERWYN, PA 19312-2409

COPY MAILED

NOV 17 2006

OFFICE OF PETITIONS

In re Application of	:	
Weedling et al.	:	
Application No. 11/488,988	:	ON PETITION
Filed: July 19, 2006	:	
Attorney Docket No. 36281-0001-05-US	:	

This is a decision on the petition under 37 CFR 1.102(c)(1), filed July 19, 2006, to make the above-identified application special based on applicant's age as set forth in M.P.E.P. § 708.02, Section IV.

The petition is **GRANTED**.

A grantable petition to make an application special under 37 CFR 1.102(c)(1) and MPEP § 708.02, Section IV: Applicant's Age must be accompanied by evidence showing that at least one of the applicants is 65 years of age, or more, such as a birth certificate or a statement by applicant. No fee is required.

The instant petition includes a statement from the applicant, Robert E. Weedling. Accordingly, the above-identified application has been accorded "special" status.

Telephone inquiries concerning this decision should be directed to the undersigned at 571-272-3206. All other inquiries concerning either the examination or status of the application should be directed to the Technology Center.

This matter is being referred to the Technology Center Art Unit 3763 for action on the merits commensurate with this decision.

Liana Walsh
Petitions Examiner
Office of Petitions

UNITED STATES PATENT AND TRADEMARK OFFICE

UNITED STATES DEPARTMENT OF COMMERCE
United States Patent and Trademark Office
Address: COMMISSIONER FOR PATENTS
P.O. Box 1450
Alexandria, Virginia 22313-1450
www.uspto.gov

THE FARRELL LAW FIRM, LLP
290 Broadhollow Road
Suite 210E
Melville, NY 11747

Mail Date: 04/21/2010

Applicant	: Jung-Won Kim	: DECISION ON REQUEST FOR
Patent Number	: 7633863	: RECALCULATION of PATENT
Issue Date	: 12/15/2009	: TERM ADJUSTMENT IN VIEW
Appliction No	: 11/489,015	: OF WYETH AND NOTICE OF INTENT TO
Filed	: 07/19/2006	: ISSUE CERTIFICATE OF CORRECTION
		:

The Request for Recalculation is **GRANTED** to the extent indicated.

The patent term adjustment has been determined to be **522** days. The USPTO will *sua sponte* issue a certificate of correction reflecting the amount of PTA days determined by the recalculation.

Prior to the issuance of the certificate of correction, the USPTO will afford patentee an opportunity to be heard and request reconsideration. Accordingly, patentee has **one month or thirty (30) days**, whichever is longer, to file a request for reconsideration of this patent term adjustment calculation. See 35 U.S.C. 154(b)(3)(B)(ii) and 37 CFR 1.322(a)(4). No extensions of time will be granted under 37 CFR 1.136.

Patentee should use document code PET.OP if electronically filing a request for reconsideration of this patent term adjustment calculation. The patentee must also include the information required by 37 CFR 1.705(b)(2) and the fee required by 37 CFR 1.18(e). If patentee does not file a timely request for reconsideration of this patent term adjustment calculation including the information required by 37 CFR 1.705(b)(2) and the fee required by 37 CFR 1.18(e), the USPTO will issue a certificate of correction reflecting the PTA determination noted above.

Patentee should be aware that in order to preserve the right to review in the United States District Court for the District of Columbia of the USPTO patent term adjustment determination, patentee must ensure that he or she also take the steps required under 35 U.S.C. 154(b)(4)(A) in a timely manner. Nothing in the request for recalculation should be construed as providing an alternative time frame for commencing a civil action under 35 U.S.C. 154(b)(4)(A).

Any questions concerning this decision should be directed to the Office of Patent Legal Administration at 571-272-7702.

UNITED STATES PATENT AND TRADEMARK OFFICE

UNITED STATES DEPARTMENT OF COMMERCE
United States Patent and Trademark Office
Address: COMMISSIONER FOR PATENTS
P.O. Box 1450
Alexandria, Virginia 22313-1450
www.uspto.gov

THE FARRELL LAW FIRM, LLP
290 Broadhollow Road
Suite 210E
Melville, NY 11747

Mail Date: 05/18/2010

Applicant : Jung-Won Kim
Patent Number : 7633863
Issue Date : 12/15/2009
Application No: 11/489,015
Filed : 07/19/2006

: NOTICE CONCERNING IMPROPER
: CALCULATION OF PATENT TERM
: ADJUSTMENT BASED UPON USPTO
: IMPROPERLY MEASURING REDUCTION
: PERIOD UNDER 37 CFR 1.704(c)(10).

The United States Patent and Trademark Office (USPTO) discovered that in processing the recent recalculation decisions mailed in response to patentee's filed Request for Recalculation of Patent Term Adjustment in view of Wyeth, the USPTO improperly measured the reduction period for reductions under 37 CFR 1.704(c)(10). Pursuant to 37 CFR 1.704(c)(10), patentee's reduction begins on the date of filing the amendment under 37 CFR 1.312 ("1.312 amendment") or other related paper and ends on the date that the Office mails a response to the filing of the 1.312 amendment or other paper. It has been discovered that during the recalculation, the calculation failed to the limit the reduction to the mail date of the response to the 1.312 amendment or other paper. Accordingly, patentee's reductions were greater than warranted.

This notice **VACATES** the previous GRANTED request for recalculation and provides patentee with a revised GRANTED recalculation.

The patent term adjustment has been determined to be **596** days. The USPTO will *sua sponte* issue a certificate of correction reflecting the amount of patent term adjustment (PTA) days determined by the recalculation.

Prior to the issuance of the certificate of correction, the USPTO will afford patentee an opportunity to be heard and request reconsideration. Accordingly, patentee has **one month or thirty (30) days** from the mail date of this notice, whichever is longer, to file a request for reconsideration of this PTA calculation. See 35 U.S.C. § 154(b)(3)(B)(ii) and 37 CFR 1.322(a)(4).

Patentee should use document code PET.OP if electronically filing a request for reconsideration of this PTA calculation. The patentee must also include the information required by 37 CFR 1.705(b)(2), and the fee required by 37 CFR 1.18(e). If patentee does not file a timely request for reconsideration of this PTA calculation, including the information required by 37 CFR 1.705(b)(2) and the fee required by 37 CFR 1.18(e), the USPTO will issue a certificate of correction reflecting the PTA determination noted above.

Patentee should be aware that in order to preserve the right of review of the USPTO's PTA determination in the United States District Court for the District of Columbia, patentee must ensure that the steps required under 35 U.S.C. § 154 (b)(4) are taken in a timely manner. Nothing in the request for recalculation should be construed as providing an alternative time frame for commencing a civil action under 35 U.S.C. § 154(b)(4).

UNITED STATES PATENT AND TRADEMARK OFFICE

UNITED STATES DEPARTMENT OF COMMERCE
United States Patent and Trademark Office
Address: COMMISSIONER FOR PATENTS
P.O. Box 1450
Alexandria, Virginia 22313-1450
www.uspto.gov

Osha Liang LLP / Lummus
Two Houston Center
909 Fannin, Suite 3500
Houston, TX 77010

Mail Date: 04/20/2010

Applicant	: Kevin J. Schwint	: DECISION ON REQUEST FOR
Patent Number	: 7632974	: RECALCULATION of PATENT
Issue Date	: 12/15/2009	: TERM ADJUSTMENT IN VIEW
Appliction No	: 11/489,017	: OF WYETH AND NOTICE OF INTENT TO
Filed	: 07/19/2006	: ISSUE CERTIFICATE OF CORRECTION
		:

The Request for Recalculation is **GRANTED** to the extent indicated.

The patent term adjustment has been determined to be **694** days. The USPTO will *sua sponte* issue a certificate of correction reflecting the amount of PTA days determined by the recalculation.

Prior to the issuance of the certificate of correction, the USPTO will afford patentee an opportunity to be heard and request reconsideration. Accordingly, patentee has **one month or thirty (30) days**, whichever is longer, to file a request for reconsideration of this patent term adjustment calculation. See 35 U.S.C. 154(b)(3)(B)(ii) and 37 CFR 1.322(a)(4). No extensions of time will be granted under 37 CFR 1.136.

Patentee should use document code PET.OP if electronically filing a request for reconsideration of this patent term adjustment calculation. The patentee must also include the information required by 37 CFR 1.705(b)(2) and the fee required by 37 CFR 1.18(e). If patentee does not file a timely request for reconsideration of this patent term adjustment calculation including the information required by 37 CFR 1.705(b)(2) and the fee required by 37 CFR 1.18(e), the USPTO will issue a certificate of correction reflecting the PTA determination noted above.

Patentee should be aware that in order to preserve the right to review in the United States District Court for the District of Columbia of the USPTO patent term adjustment determination, patentee must ensure that he or she also take the steps required under 35 U.S.C. 154(b)(4)(A) in a timely manner. Nothing in the request for recalculation should be construed as providing an alternative time frame for commencing a civil action under 35 U.S.C. 154(b)(4)(A).

Any questions concerning this decision should be directed to the Office of Patent Legal Administration at 571-272-7702.

UNITED STATES PATENT AND TRADEMARK OFFICE

COMMISSIONER FOR PATENTS
UNITED STATES PATENT AND TRADEMARK OFFICE
P.O. BOX 1450
ALEXANDRIA, VA 22313-1450
www.uspto.gov

CONNOLLY BOVE LODGE & HUTZ LLP
P.O. BOX 2207
WILMINGTON, DE 19899

COPY MAILED

AUG 21 2008

In re Application of
Robert Koppany
Application No. 11/489,031
Filed: July 18, 2006
Attorney Docket No. 7677-101/10504806

ON PETITION

This is a decision on the petition under 37 CFR 1.137(b) to revive the above-identified application, filed April 24, 2008.

The petition is GRANTED.

The application became abandoned for failure to submit formal drawings in a timely manner in reply to the Notice of Allowability, mailed December 17, 2007. A Notice of Abandonment was mailed on April 10, 2008. In response, on April 24, 2008, the present petition was filed.

It is noted that the petition is not signed by an attorney of record. However, in accordance with 37 CFR 1.34(a), the signature of Billy A. Robbins appearing on the petition shall constitute a representation to the United States Patent and Trademark Office that he is authorized to represent the particular party on whose behalf he acts. A courtesy copy of this decision is being mailed to petitioner. If Mr. Robbins desires to receive future correspondence regarding this application, then the appropriate power of attorney or authorization of agent must be submitted. All future correspondence regarding this application file will be directed solely to the address of record.

The petition satisfies the requirements of 37 CFR 1.137(b) in that petitioner has supplied (1) the reply in the form of corrected drawings, (2) the petition fee of $770; and (3) an adequate statement of unintentional delay[1].

The application is being referred to the Office of Data Management to oversee the review of the drawing filed April 24, 2008 and for processing into a patent.

[1] 37 CFR 1.137(b)(3) requires a statement that the entire delay in filing the required reply from the due date for the reply until the filing of a grantable petition pursuant to 37 CFR 1.137(b) was unintentional. While the statement is not made by an attorney of record, such statement is being treated as having been made as the result of a reasonable inquiry into the facts and circumstances of such delay. See 37 CFR 10.18(b) and Changes to Patent Practice and Procedure; Final Rule Notice, 62 Fed. Reg. 53131, 53178 (October 10, 1997), 1203 Off. Gaz. Pat. Office 63, 103 (October 21, 1997). In the event that such an inquiry has not been made, petitioner must make such an inquiry. If such inquiry results in the discovery that it is not correct that the entire delay in filing the required reply from the due date for the reply until the filing of a grantable petition pursuant to 37 CFR 1.137(b) was unintentional, petitioner must notify the Office.

Telephone inquires related to this decision should be directed to the undersigned at (571) 272-3204. Telephone inquiries related to processing as a patent should be directed to (571) 272-4200.

Sherry D. Brinkley
Petitions Examiner
Office of Petitions

cc: BILLY A. ROBBINS
CONNOLLY BOVE LODGE & HUTZ LLP
333 S. GRAND AVENUE, SUITE 2300
LOS ANGELES, CA 90071

UNITED STATES PATENT AND TRADEMARK OFFICE

UNITED STATES DEPARTMENT OF COMMERCE
United States Patent and Trademark Office
Address: COMMISSIONER FOR PATENTS
P.O. Box 1450
Alexandria, Virginia 22313-1450
www.uspto.gov

CYPRESS SEMICONDUCTOR CORPORATION
198 CHAMPION COURT
SAN JOSE, CA 95134-1709

Mail Date: 04/21/2010

Applicant	: Sungkwon Lee	: DECISION ON REQUEST FOR
Patent Number	: 7592661	: RECALCULATION of PATENT
Issue Date	: 09/22/2009	: TERM ADJUSTMENT IN VIEW
Appliction No	: 11/489,047	: OF WYETH AND NOTICE OF INTENT TO
Filed	: 07/19/2006	: ISSUE CERTIFICATE OF CORRECTION
		:

The Request for Recalculation is **GRANTED** to the extent indicated.

The patent term adjustment has been determined to be **28** days. The USPTO will *sua sponte* issue a certificate of correction reflecting the amount of PTA days determined by the recalculation.

Prior to the issuance of the certificate of correction, the USPTO will afford patentee an opportunity to be heard and request reconsideration. Accordingly, patentee has **one month or thirty (30) days**, whichever is longer, to file a request for reconsideration of this patent term adjustment calculation. See 35 U.S.C. 154(b)(3)(B)(ii) and 37 CFR 1.322(a)(4). No extensions of time will be granted under 37 CFR 1.136.

Patentee should use document code PET.OP if electronically filing a request for reconsideration of this patent term adjustment calculation. The patentee must also include the information required by 37 CFR 1.705(b)(2) and the fee required by 37 CFR 1.18(e). If patentee does not file a timely request for reconsideration of this patent term adjustment calculation including the information required by 37 CFR 1.705(b)(2) and the fee required by 37 CFR 1.18(e), the USPTO will issue a certificate of correction reflecting the PTA determination noted above.

Patentee should be aware that in order to preserve the right to review in the United States District Court for the District of Columbia of the USPTO patent term adjustment determination, patentee must ensure that he or she also take the steps required under 35 U.S.C. 154(b)(4)(A) in a timely manner. Nothing in the request for recalculation should be construed as providing an alternative time frame for commencing a civil action under 35 U.S.C. 154(b)(4)(A).

Any questions concerning this decision should be directed to the Office of Patent Legal Administration at 571-272-7702.

UNITED STATES PATENT AND TRADEMARK OFFICE

Commissioner for Patents
United States Patent and Trademark Office
P.O. Box 1450
Alexandria, VA 22313-1450
www.uspto.gov

Jenkins, Wilson, Taylor & Hunt, P.A.
Suite 1200, University Tower
3100 Tower Boulevard
Durham, NC 27707

COPY MAILED

DEC 20 2007

OFFICE OF PETITIONS

In re Application of :
Peter Moll et al. :
Application No. 11/489,052 : DECISION ON PETITION
Filed: July 19, 2006 : TO WITHDRAW
Attorney Docket No. 1406/381 : FROM RECORD
:

This is a decision on the Request to Withdraw as attorney or agent of record under 37 C.F.R. § 1.36(b), filed August 3, 2007.

The request is **NOT APPROVED** as moot.

A review of the file record indicates that the power of attorney to Jenkins, Wilson, Taylor & Hunt, P.A. has been revoked by the assignee of the patent application on August 24, 2007. Accordingly, the request to withdraw under 37 C.F.R. § 1.36(b) is moot.

All future communications from the Office will continue to be directed to the below-listed address until otherwise notified by applicant.

Telephone inquires concerning this decision should be directed to Terri Williams at 571-272-2991.

T. Williams

Terri Williams
Petitions Examiner
Office of Petitions

cc: **Eschweiler & Associates LLC**
National City Bank Building
Cleveland, OH 44114

UNITED STATES PATENT AND TRADEMARK OFFICE

UNITED STATES DEPARTMENT OF COMMERCE
United States Patent and Trademark Office
Address: COMMISSIONER FOR PATENTS
P.O. Box 1450
Alexandria, Virginia 22313-1450
www.uspto.gov

CHRISTENSEN, O'CONNOR, JOHNSON, KINDNESS, PLLC
1420 FIFTH AVENUE
SUITE 2800
SEATTLE, WA 98101-2347

Mail Date: 04/20/2010

Applicant	: Akira Mashimo	: DECISION ON REQUEST FOR
Patent Number	: 7570570	: RECALCULATION of PATENT
Issue Date	: 08/04/2009	: TERM ADJUSTMENT IN VIEW
Appliction No	: 11/489,058	: OF WYETH AND NOTICE OF INTENT TO
Filed	: 07/18/2006	: ISSUE CERTIFICATE OF CORRECTION
		:

The Request for Recalculation is **GRANTED** to the extent indicated.

The patent term adjustment has been determined to be **540** days. The USPTO will *sua sponte* issue a certificate of correction reflecting the amount of PTA days determined by the recalculation.

Prior to the issuance of the certificate of correction, the USPTO will afford patentee an opportunity to be heard and request reconsideration. Accordingly, patentee has **one month or thirty (30) days**, whichever is longer, to file a request for reconsideration of this patent term adjustment calculation. See 35 U.S.C. 154(b)(3)(B)(ii) and 37 CFR 1.322(a)(4). No extensions of time will be granted under 37 CFR 1.136.

Patentee should use document code PET.OP if electronically filing a request for reconsideration of this patent term adjustment calculation. The patentee must also include the information required by 37 CFR 1.705(b)(2) and the fee required by 37 CFR 1.18(e). If patentee does not file a timely request for reconsideration of this patent term adjustment calculation including the information required by 37 CFR 1.705(b)(2) and the fee required by 37 CFR 1.18(e), the USPTO will issue a certificate of correction reflecting the PTA determination noted above.

Patentee should be aware that in order to preserve the right to review in the United States District Court for the District of Columbia of the USPTO patent term adjustment determination, patentee must ensure that he or she also take the steps required under 35 U.S.C. 154(b)(4)(A) in a timely manner. Nothing in the request for recalculation should be construed as providing an alternative time frame for commencing a civil action under 35 U.S.C. 154(b)(4)(A).

Any questions concerning this decision should be directed to the Office of Patent Legal Administration at 571-272-7702.

UNITED STATES PATENT AND TRADEMARK OFFICE

Commissioner for Patents
United States Patent and Trademark Office
P.O. Box 1450
Alexandria, VA 22313-1450
www.uspto.gov

Roy L. Anderson, Esq.
Law Offices Of Roy Anderson
3541 Ocean View Boulevard
Glendale, CA 91208

MAILED

JAN 29 2009

OFFICE OF PETITIONS

In re Application of :
Franklin Eventoff :
Application No. 11/489,071 : ON PETITION
Filed: July 18, 2006 :
Attorney Docket No. RLA35.301 :

This is a decision on the petition under 37 CFR 1.137(b), filed November 24, 2008, to revive the above-identified application.

The application became abandoned for failure to file a reply to the non-final Office action mailed on August 9, 2007. A Notice of Abandonment was mailed on March 17, 2008.

The petition satisfies the requirements of 37 CFR 1.137(b) in that petitioner has supplied (1) the reply in the form of an amendment; (2) the petition fee of $810; and (3) a proper statement of unintentional delay. Therefore, the petition is **GRANTED**.

This application file is being referred to Technology Center Art Unit 2859 for further processing in accordance with this decision.

Telephone inquiries concerning this decision should be directed to the undersigned at (571) 272-3226.

Andrea Smith
Petitions Examiner
Office of Petitions

UNITED STATES PATENT AND TRADEMARK OFFICE

Commissioner for Patents
United States Patent and Trademark Office
P.O. Box 1450
Alexandria, VA 22313-1450
www.uspto.gov

QUALCOMM INCORPORATED
5775 MOREHOUSE DR.
SAN DIEGO CA 92121

MAILED

MAY 21 2010

OFFICE OF PETITIONS

In re Application of
Gokhan Mergen et al.
Application No. 11/489,087
Filed: July 18, 2006
Attorney Docket Number: 051150

ON PETITION

This is a decision on the petition, filed March 30, 2010 under 37 CFR 1.137(b)[1], to revive the above identified application.

The petition is **GRANTED**.

This application became abandoned February 26, 2010 for failure to timely pay the issue fee in response to the Notice of Allowance sent electronically on November 25, 2009, which set a three month statutory period for response. Accordingly, the Notice of Abandonment dated March 16, 2010 was sent via email notification on March 19, 2010.

All other requirements of 37 CFR 1.137(b) having now been met, this matter is being referred to the Publishing Division to be processed into a patent.

Telephone inquiries concerning this matter may be directed to the undersigned Petitions Attorney at (571) 272-3212.

Patricia Faison-Ball
Senior Petitions Attorney
Office of Petitions

---

[1]Effective December 1, 1997, the provisions of 37 CFR 1.137(b) now provide that where the delay in reply was unintentional, a petition may be filed to revive an abandoned application or a lapsed patent pursuant to 37 CFR 1.137(b). A grantable petition filed under the provisions of 37 CFR 1.137(b) must be accompanied by:

(1) the required reply, unless previously filed. In a nonprovisional application abandoned for failure to prosecute, the required reply may be met by the filing of a continuing application. In an application or patent, abandoned or lapsed for failure to pay the issue fee or any portion thereof, the required reply must be the payment of the issue fee or any outstanding balance thereof.

(2) the petition fee as set forth in 37 CFR 1.17(m);

(3) a statement that the entire delay in filing the required reply from the due date for the reply until the filing of a grantable petition pursuant to 37 CFR 1.137(b) was unintentional. The Commissioner may required additional information where there is a question whether the delay was unintentional; and

(4) any terminal disclaimer (and fee as set forth in 37 CFR 1.20(d)) required pursuant to 37 CFR 1.137(c)).

UNITED STATES PATENT AND TRADEMARK OFFICE

Commissioner for Patents
United States Patent and Trademark Office
P.O. Box 1450
Alexandria, VA 22313-1450
www.uspto.gov

COWAN LIEBOWITZ & LATMAN PC
JOHN J. TORRENTE
1133 AVENUE OF THE AMERICAS
NEW YORK, NY 10036

COPY MAILED

MAY 18 2007

OFFICE OF PETITIONS

In re Application of :
Osamu Tsujii :
Application No. 11/489,088 : DECISION GRANTING PETITION
Filed: July 19, 2006 : UNDER 37 CFR 1.313(c)(2)
Attorney Docket No. B588-142 :
(25815.146)

This is a decision on the petition, filed May 16, 2007, under 37 CFR 1.313(c)(2) to withdraw the above-identified application from issue after payment of the issue fee.

The petition is **GRANTED**.

The above-identified application is withdrawn from issue for consideration of a submission under 37 CFR 1.114 (request for continued examination). See 37 CFR 1.313(c)(2).

Petitioner is advised that the issue fee paid on April 17, 2007 in the above-identified application cannot be refunded. If, however, the above-identified application is again allowed, petitioner may request that it be applied towards the issue fee required by the new Notice of Allowance.[1]

Telephone inquiries should be directed to the undersigned at (571) 272-3218.

This matter is being referred to Technology Center AU 2882 for processing of the request for continued examination under 37 CFR 1.114 and for consideration of the concurrently filed amendment.

Frances Hicks
Petitions Examiner
Office of Petitions

C:\Documents and Settings\fhicks\My Documents\470\May10\489088.wpd

---

[1] *The request to apply the issue fee to the new Notice may be satisfied by completing and returning the new Part B – Fee(s) Transmittal Form (along with any balance due at the time of submission). Petitioner is advised that the Issue Fee Transmittal Form must be completed and timely submitted to avoid abandonment.*

UNITED STATES PATENT AND TRADEMARK OFFICE

Commissioner for Patents
United States Patent and Trademark Office
P.O. Box 1450
Alexandria, VA 22313-1450
www.uspto.gov

MICHAUD-DUFFY GROUP LLP
306 Industrial Park Road
Suite 206
Middletown, CT 06457

MAILED

MAY 22 2009

OFFICE OF PETITIONS

In re Application of	:	
Mehdi Golafshani	:	
Application No. 11/489,095	:	DECISION ON PETITION
Filed: July 18, 2006	:	TO WITHDRAW
Attorney Docket No. 1033-0003-1	:	FROM RECORD
	:	

This is a decision on the Request to Withdraw as attorney or agent of record under 37 C.F.R. § 1.36(b), filed March 25, 2009.

The request is **APPROVED**.

A grantable request to withdraw as attorney/agent of record must be signed by every attorney/agent seeking to withdraw or contain a clear indication that one attorney is signing on behalf of another/others. A request to withdraw will not be approved unless at least 30 (thirty) days would remain between the date of approval and the later of the expiration date of a time to file a response or the expiration date of the maximum time period which can be extended under 37 C.F.R. § 1.136(a).

The request was signed by Richard R. Michaud on behalf of all attorneys of record. All attorneys/agents have been withdrawn. Applicant is reminded that there is no attorney of record at this time.

All future correspondence will be directed to the first named inventor Joe Smith at the address indicated below.

There is an outstanding Office action mailed December 9, 2008 that requires a reply from the applicant.

Telephone inquiries concerning this decision should be directed to Terri Williams at 571-272-2991.

Terri Williams
Petitions Examiner
Office of Petitions

cc: **Mehdi Golafshani**
11 Fox Run
Woodbury, CT 06798

UNITED STATES PATENT AND TRADEMARK OFFICE

UNITED STATES DEPARTMENT OF COMMERCE
United States Patent and Trademark Office
Address: COMMISSIONER FOR PATENTS
P.O. Box 1450
Alexandria, Virginia 22313-1450
www.uspto.gov

APPLICATION NUMBER	FILING OR 371(C) DATE	FIRST NAMED APPLICANT	ATTY. DOCKET NO./TITLE
11/489,095	07/18/2006	Mehdi Golafshani	1033-0003-1

CONFIRMATION NO. 1088

POWER OF ATTORNEY NOTICE

49698
MICHAUD-DUFFY GROUP LLP
306 INDUSTRIAL PARK ROAD
SUITE 206
MIDDLETOWN, CT 06457

OC000000036102847

Date Mailed: 05/21/2009

NOTICE REGARDING CHANGE OF POWER OF ATTORNEY

This is in response to the Power of Attorney filed 03/25/2009.

- The withdrawal as attorney in this application has been accepted. Future correspondence will be mailed to the new address of record. 37 CFR 1.33.

/tswilliams/

Office of Data Management, Application Assistance Unit (571) 272-4000, or (571) 272-4200, or 1-888-786-0101

UNITED STATES PATENT AND TRADEMARK OFFICE

UNITED STATES DEPARTMENT OF COMMERCE
United States Patent and Trademark Office
Address: COMMISSIONER FOR PATENTS
P.O. Box 1450
Alexandria, Virginia 22313-1450
www.uspto.gov

SIEMENS CORPORATION
INTELLECTUAL PROPERTY DEPARTMENT
170 WOOD AVENUE SOUTH
ISELIN, NJ 08830

Mail Date: 04/21/2010

Applicant	: Weihong Guo	: DECISION ON REQUEST FOR
Patent Number	: 7627155	: RECALCULATION of PATENT
Issue Date	: 12/01/2009	: TERM ADJUSTMENT IN VIEW
Appliction No	: 11/489,103	: OF WYETH AND NOTICE OF INTENT TO
Filed	: 07/19/2006	: ISSUE CERTIFICATE OF CORRECTION
		:

The Request for Recalculation is **GRANTED** to the extent indicated.

The patent term adjustment has been determined to be **804** days. The USPTO will *sua sponte* issue a certificate of correction reflecting the amount of PTA days determined by the recalculation.

Prior to the issuance of the certificate of correction, the USPTO will afford patentee an opportunity to be heard and request reconsideration. Accordingly, patentee has **one month or thirty (30) days**, whichever is longer, to file a request for reconsideration of this patent term adjustment calculation. See 35 U.S.C. 154(b)(3)(B)(ii) and 37 CFR 1.322(a)(4). No extensions of time will be granted under 37 CFR 1.136.

Patentee should use document code PET.OP if electronically filing a request for reconsideration of this patent term adjustment calculation. The patentee must also include the information required by 37 CFR 1.705(b)(2) and the fee required by 37 CFR 1.18(e). If patentee does not file a timely request for reconsideration of this patent term adjustment calculation including the information required by 37 CFR 1.705(b)(2) and the fee required by 37 CFR 1.18(e), the USPTO will issue a certificate of correction reflecting the PTA determination noted above.

Patentee should be aware that in order to preserve the right to review in the United States District Court for the District of Columbia of the USPTO patent term adjustment determination, patentee must ensure that he or she also take the steps required under 35 U.S.C. 154(b)(4)(A) in a timely manner. Nothing in the request for recalculation should be construed as providing an alternative time frame for commencing a civil action under 35 U.S.C. 154(b)(4)(A).

Any questions concerning this decision should be directed to the Office of Patent Legal Administration at 571-272-7702.

UNITED STATES PATENT AND TRADEMARK OFFICE

Commissioner for Patents
United States Patent and Trademark Office
P.O. Box 1450
Alexandria, VA 22313-1450
www.uspto.gov

MICHAUD-DUFFY GROUP LLP
306 INDUSTRIAL PARK ROAD
SUITE 206
MIDDLETOWN, CT 06457

COPY MAILED

OCT 22 2008

OFFICE OF PETITIONS

In re Application of :
Cornelis PAMEIJER, et al :
Application No. 11/489,107 : DECISION ON PETITION
Filed: July 18, 2006 : TO WITHDRAW
Attorney Docket No. 1095-0002-1 : FROM RECORD
:

This is a decision on the Request to Withdraw as attorney or agent of record under 37 C.F.R. § 1.36(b), filed September 9, 2008.

The request is **NOT APPROVED**.

The request cannot be approved because no reasons for withdrawal have been provided. The Office cannot, at this time, determine whether practitioner's request is one of the mandatory or permissive reasons enumerated in 37 CFR 10.40. Any subsequent requests must include reasons for withdrawal. Please note that there is a space provided for on PTO/SB/83 (Request to Withdraw as Attorney or Agent) to supply practitioner's reasons.

All future communications from the Office will continue to be directed to the above-listed address until otherwise notified by applicant.

Telephone inquiries concerning this decision should be directed to the undersigned at 571-272-6735.

Diane Goodwyn
Petitions Examiner
Office of Petitions

UNITED STATES PATENT AND TRADEMARK OFFICE

Commissioner for Patents
United States Patent and Trademark Office
P.O. Box 1450
Alexandria, VA 22313-1450
www.uspto.gov

MICHAUD-DUFFY GROUP LLP
306 INDUSTRIAL PARK ROAD
SUITE 206
MIDDLETOWN, CT 06457

COPY MAILED

JAN 2 1 2009

In re Application of	:	
Cornelis PAMEIJER, et al	:	
Application No. 11/489,107	:	DECISION ON PETITION
Filed: July 18, 2006	:	TO WITHDRAW
Attorney Docket No. 1095-0002-1	:	FROM RECORD
	:	

This is a decision on the Request to Withdraw as attorney or agent of record under 37 C.F.R. § 1.36(b), filed December 29, 2008.

The request is **APPROVED**.

A grantable request to withdraw as attorney/agent of record must be signed by every attorney/agent seeking to withdraw or contain a clear indication that one attorney is signing on behalf of another/others. The Office requires the practitioner(s) requesting withdrawal to certify that he, she, or they have: (1) given reasonable notice to the client, prior to the expiration of the response period, that the practitioner(s) intends to withdraw from employment; (2) delivered to the client or a duly authorized representative of the client all papers and property (including funds) to which the client is entitled; and (3) notified the client of any responses that may be due and the time frame within which the client must respond, pursuant 37 CFR 10.40(c).

The request was signed by Richard R. Michaud on behalf of the attorneys of record associated with Customer No. 49698.

The attorneys of record associated with Customer No. 49698 have been withdrawn.

Applicant is reminded that there is no attorney of record at this time.

All future correspondence from the Office will be directed to the address indicated below until otherwise properly notified by the applicant.

Telephone inquiries concerning this decision should be directed to the undersigned at 571-272-6735.

Diane Goodwyn
Petitions Examiner
Office of Petitions

cc: CORNELIS PAMEIJER
10 HIGHWOOD
SIMSBURY, CT 06070

UNITED STATES PATENT AND TRADEMARK OFFICE

Commissioner for Patents
United States Patent and Trademark Office
P.O. Box 1450
Alexandria, VA 22313-1450
www.uspto.gov

ROPES & GRAY LLP
PATENT DOCKETING 39/361
1211 AVENUE OF THE AMERICAS
NEW YORK, NY 10036-8704

COPY MAILED

MAR 0 7 2008

OFFICE OF PETITIONS

In re Application of :
Adrian J. Drexler, et al. :
Application No.: 11/489,117 : ON PETITION
Filed: July 18, 2006 :
Attorney Docket No.: MIC-44 DIV.4 :

This is a decision on the petition, filed March 6, 2008, under 37 CFR 1.313(c)(2) to withdraw the above-identified application from issue after payment of the issue fee.

The petition is **GRANTED**.

The above-identified application is withdrawn from issue for consideration of a submission under 37 CFR 1.114 (request for continued examination). See 37 CFR 1.313(c)(2).

Petitioner is advised that the issue fee paid on February 28, 2008, cannot be refunded. If, however, the above-identified application is again allowed, petitioner may request that it be applied towards the issue fee required by the new Notice of Allowance. [1]

Telephone inquiries relating to this decision should be directed to the undersigned at (571) 272-3204.

The application is being referred to Technology Center AU 2816 for further processing of the request for continued examination under 37 CFR 1.114 and for consideration of the concurrently filed Information Disclosure Statement (IDS).

Sherry D. Brinkley
Petitions Examiner
Office of Petitions

[1] *The request to apply the issue fee to the new Notice may be satisfied by completing and returning the new Part B – Fee(s) Transmittal Form (along with any balance due at the time of submission). Petitioner is advised that the Issue Fee Transmittal Form must be completed and timely submitted to avoid abandonment of the application.*

UNITED STATES PATENT AND TRADEMARK OFFICE

Commissioner for Patents
United States Patent and Trademark Office
P.O. Box 1450
Alexandria, VA 22313-1450
www.uspto.gov

Connolly Bove Lodge & Hutz LLP
P.O. Box 2207
Wilmington DE 19899-2207

COPY MAILED

MAY 16 2007

OFFICE OF PETITIONS

In re Application of :
JERNIGAN, WILLIAM B. :
Application No. 11/489,141 : DECISION ON PETITION
Filed: 07/19/2006 :
Attorney Docket No. HCC-19 (306*415) :

This is in response to the "Petition Under 37 CFR 1.47(b), filed November 8, 2006.

The petition is **DISMISSED**.

Rule 47 applicant is given TWO (2) MONTHS from the mailing date of this decision to reply, correcting the below-noted deficiencies. Any reply should be entitled "Request for Reconsideration of Petition Under 37 CFR 1.47(b)," and should only address the deficiencies noted below, except that the reply may include an oath or declaration executed by the non-signing inventor. **FAILURE TO RESPOND WILL RESULT IN ABANDONMENT OF THE APPLICATION.** Any extensions of time will be governed by 37 CFR 1.136(a).

A grantable petition under 37 CFR 1.47(b) requires:

(1) proof that the non-signing inventor cannot be reached after diligent effort or refuses to sign the oath or declaration after having been presented with the application papers (specification, claims and drawings);
(2) an acceptable oath or declaration in compliance with 35 U.S.C. §§ 115 and 116;
(3) the petition fee;
(4) a statement of the last known address of the non-signing inventor.
(5) proof of proprietary interest: and
(6) proof of irreparable damage.

Applicant lacks items (1), (2) and (6) set forth above.

As to item (1), rule 47 applicant must demonstrate with documented evidence that an inventor refuses to join in the application after having been presented with the application papers (specification, claims, drawings and oath or declaration). Although rule 47 applicant stated that a copy of the application was mailed to the inventor, it is unclear if the inventor received the papers. If applicant cannot show that a copy of the application papers was mailed return receipt

requested to the inventor at his last known address, then applicant should mail another copy to the inventor. A cover letter of instructions to the inventor should accompany the application papers, setting a deadline or á statement that no response will constitute a refusal. This sort of ultimatum lends support to a finding of refusal by conduct. The proof of the pertinent events should be made by a statement of someone with firsthand knowledge of the events and should include documentary evidence, such as certified mail return receipt, cover letter of instructions, telegram, etc. *See* MPEP 409.03(d).

Where there is an express or oral refusal, that fact, along with the time and place of the refusal, must be stated in an affidavit or declaration by the party to whom the refusal was made. Where there is a written refusal, a copy of the document(s) evidencing that refusal must be made part of the affidavit or declaration. When it is concluded by the rule 47 applicant that an inventor's conduct constitutes a refusal, all facts upon which that conclusion is based should be stated in an affidavit or declaration. If there is documentary evidence to support facts alleged in the affidavit or declaration, such evidence must be submitted.

As to item (2), the Office notes that:

> The 37 CFR 1.47(b) applicant must make the oath required by 37 CFR 1.63 and 1.64 or 1.175. Where a corporation is the 37 CFR 1.47(b) applicant, an officer (President, Vice-President, Secretary, Treasurer, or Chief Executive Officer) thereof should normally sign the necessary oath or declaration. A corporation may authorize any person, including an attorney or agent registered to practice before the U.S. Patent and Trademark Office, to sign the application oath or declaration on its behalf. Where an oath or declaration is signed by a registered attorney or agent on behalf of a corporation, either proof of the attorney's or agent's authority in the form of a statement signed by an appropriate corporate officer must be submitted, or the attorney or agent may simply state that he or she is authorized to sign on behalf of the corporation. Where the oath or declaration is being signed on behalf of an assignee, see MPEP Section 324. An inventor may not authorize another individual to act as his or her agent to sign the application oath or declaration on his or her behalf. *Staeger v. Commissioner*, 189 USPQ 272 (D.D.C. 1976), *In re Striker*, 182 USPQ 507 (Comm'r Pat. 1973). Where an application is executed by one other than the inventor, the declaration required by 37 CFR 1.63 must state the full name, residence, post office address, and citizenship of the non-signing inventor. **Also, the title or position of the person signing must be stated if signing on behalf of a corporation under 37 CFR 1.47(b).**

The rule 47 applicant submitted a declaration with the present petition. Harold Pezzner, the attorney of record, signed "William B. Jernigan by Harold Pezzner" in the signature block for the first inventor. Mr. Jernigan is the sole inventor. Mr. Pezzner should **not** sign the name of Mr. Jernigan. Rather, to avoid any confusion, as well as to ensure the record is correct on its face, the

Office requests that applicant submit a new declaration completed and signed by Mr. Pezzner on behalf of the non-signing inventor. The Office suggests that applicant provide the **title** and signature of Mr. Pezzner in a separate space (not in a signature block for an inventor) to avoid any mistaken belief Mr. Pezzner is also a named inventor in the subject application.

Accordingly, to correct the deficiency, applicant must submit a declaration setting forth the inventor's full name, residence and/or post office address, and citizenship. Applicant should leave the inventor's signature line blank. Additionally, Mr. Pezzner, or another appropriate party, should indicate his title and sign only his own name on behalf of the non-signing inventor (not the inventor's name) in compliance with 37 CFR 1.63 and 1.64 as indicated above.

As to item (6), rule 47 applicant failed to provide proof of irreparable damage (see MPEP 409.03(g)). A statement by rule 47 applicant that the filing is necessary to preserve the rights of the parties would be sufficient.

The USPTO finance records indicate that the Office charged the Deposit Account a duplicate fee for an extension of time for response within the first month in the amount of $120.00. This amount will be applied to the $200.00 fee for filing the present petition. Therefore, the Office will charge the Deposit Account for the difference of $80.00.

Further correspondence with respect to this matter should be addressed as follows:

By mail: Mail Stop PETITIONS
Commissioner for Patents
Post Office Box 1450
Alexandria, VA 22313-1450

By hand: Customer Service Window
Mail Stop Petitions
Randolph Building
401 Dulany Street
Alexandria, VA 22314

By fax: (571) 273-8300
ATTN: Office of Petitions

Telephone inquiries should be directed to the undersigned at (571) 272-3211.

Christina Tartera Donnell

Christina Tartera Donnell
Senior Petitions Attorney
Office of Petitions

UNITED STATES PATENT AND TRADEMARK OFFICE

UNITED STATES DEPARTMENT OF COMMERCE
United States Patent and Trademark Office
Address: COMMISSIONER FOR PATENTS
P.O. Box 1450
Alexandria, Virginia 22313-1450
www.uspto.gov

James C. Scheller, Jr.
BLAKELY, SOKOLOFF, TAYLOR & ZAFMAN LLP
Seventh Floor
12400 Wilshire Boulevard
Los Angeles, CA 90025-1026

Mail Date: 04/21/2010

Applicant	: Curtis L. Carrender	: DECISION ON REQUEST FOR
Patent Number	: 7619531	: RECALCULATION of PATENT
Issue Date	: 11/17/2009	: TERM ADJUSTMENT IN VIEW
Appliction No	: 11/489,149	: OF WYETH AND NOTICE OF INTENT TO
Filed	: 07/18/2006	: ISSUE CERTIFICATE OF CORRECTION
		:

The Request for Recalculation is **GRANTED** to the extent indicated.

The patent term adjustment has been determined to be **568** days. The USPTO will *sua sponte* issue a certificate of correction reflecting the amount of PTA days determined by the recalculation.

Prior to the issuance of the certificate of correction, the USPTO will afford patentee an opportunity to be heard and request reconsideration. Accordingly, patentee has **one month or thirty (30) days**, whichever is longer, to file a request for reconsideration of this patent term adjustment calculation. See 35 U.S.C. 154(b)(3)(B)(ii) and 37 CFR 1.322(a)(4). No extensions of time will be granted under 37 CFR 1.136.

Patentee should use document code PET.OP if electronically filing a request for reconsideration of this patent term adjustment calculation. The patentee must also include the information required by 37 CFR 1.705(b)(2) and the fee required by 37 CFR 1.18(e). If patentee does not file a timely request for reconsideration of this patent term adjustment calculation including the information required by 37 CFR 1.705(b)(2) and the fee required by 37 CFR 1.18(e), the USPTO will issue a certificate of correction reflecting the PTA determination noted above.

Patentee should be aware that in order to preserve the right to review in the United States District Court for the District of Columbia of the USPTO patent term adjustment determination, patentee must ensure that he or she also take the steps required under 35 U.S.C. 154(b)(4)(A) in a timely manner. Nothing in the request for recalculation should be construed as providing an alternative time frame for commencing a civil action under 35 U.S.C. 154(b)(4)(A).

Any questions concerning this decision should be directed to the Office of Patent Legal Administration at 571-272-7702.

UNITED STATES PATENT AND TRADEMARK OFFICE

Commissioner for Patents
United States Patent and Trademark Office
P.O. Box 1450
Alexandria, VA 22313-1450
www.uspto.gov

COPY MAILED

APR 30 2009

OFFICE OF PETITIONS

MICHAUD-DUFFY GROUP LLP
306 INDUSTRIAL PARK ROAD
SUITE 206
MIDDLETOWN CT 06457

In re Application of
Mehdi Golafshani
Application No. 11/489,156
Filed: July 18, 2006
Attorney Docket No. 1033-0002-1

DECISION ON PETITION
TO WITHDRAW
FROM RECORD

This is a decision on the Request to Withdraw as attorney or agent of record under 37 C.F.R. § 1.36(b), filed March 25, 2009.

The request is **APPROVED**.

A grantable request to withdraw as attorney/agent of record must be signed by every attorney/agent seeking to withdraw or contain a clear indication that one attorney is signing on behalf of another/others.

The request was signed by Richard R. Michaud behalf of all attorneys of record who are associated with customer No. 49698. All attorneys/agents associated with the Customer Number 49698 have been withdrawn. Applicant is reminded that there is no attorney of record at this time.

The correspondence address of record has been changed and the new correspondence address is the address indicated below.

There is an outstanding Office action mailed November 26, 2009 that requires a reply from applicant.

Telephone inquiries concerning this decision should be directed to undersigned at 571-272-1642. All other inquiries concerning the examination or status of this application should be directed to the Technology Center.

/AMW/
April M. Wise
Petitions Examiner
Office of Petitions

cc: MEHDI GOLAFSHANI
11 FOX RUN
WOODBURY, CT 06798

UNITED STATES PATENT AND TRADEMARK OFFICE

UNITED STATES DEPARTMENT OF COMMERCE
United States Patent and Trademark Office
Address: COMMISSIONER FOR PATENTS
P.O. Box 1450
Alexandria, Virginia 22313-1450
www.uspto.gov

APPLICATION NUMBER	FILING OR 371(C) DATE	FIRST NAMED APPLICANT	ATTY. DOCKET NO./TITLE
11/489,156	07/18/2006	Mehdi Golafshani	1033-0002-1

CONFIRMATION NO. 9418

POWER OF ATTORNEY NOTICE

49698
MICHAUD-DUFFY GROUP LLP
306 INDUSTRIAL PARK ROAD
SUITE 206
MIDDLETOWN, CT 06457

Date Mailed: 04/27/2009

NOTICE REGARDING CHANGE OF POWER OF ATTORNEY

This is in response to the Power of Attorney filed 03/25/2009.

- The withdrawal as attorney in this application has been accepted. Future correspondence will be mailed to the new address of record. 37 CFR 1.33.

/amwise/

Office of Data Management, Application Assistance Unit (571) 272-4000, or (571) 272-4200, or 1-888-786-0101

UNITED STATES PATENT AND TRADEMARK OFFICE

Commissioner for Patents
United States Patent and Trademark Office
P.O. Box 1450
Alexandria, VA 22313-1450
www.uspto.gov

BERNHARD P. MOLLDREM, JR.
224 HARRISON STREET
SUITE 200
SYRACUSE, NY 13202

COPY MAILED

DEC 04 2008

OFFICE OF PETITIONS

In re Application of :
Robert M. Witter :
Application No. 11/489,182 : DECISION ON PETITION
Filed: July 19, 2006 : TO MAKE SPECIAL UNDER
Attorney Docket No. 694.011PA : 37 CFR 1.102(c)(2)
:

This is a decision on the petition under 37 CFR 1.102(c)(2)(i), filed July 19, 2006, to make the above-identified application special based on the invention materially enhancing the quality of the environment as set forth in M.P.E.P. § 708.02, Section V.

The petition is **DISMISSED**.

A grantable petition to make an application special under 37 CFR 1.102(c)(2)(i) and MPEP § 708.02, Section V: Environmental Quality, must state that special status is sought because the invention materially enhances the quality of the environment by contributing to the restoration or maintenance of basic life-sustaining natural elements. If the disclosure is not clear on its face that the claimed invention materially enhances the quality of the environment by contributing to the restoration or maintenance of one of the basic life-sustaining natural elements, the petition must be accompanied by a statement by the applicant, assignee, or an attorney/agent registered to practice before the Office explaining how the materiality standard is met. No fee is required

The present invention is directed to devices and equipment for collecting bulk solids, which precipitates the dust precipitates into a bag, drum, barrel, or other container. The invention is more specifically directed to a compact and efficient device to be used to separate and collect the dust from the airstream emerging from the tool and to clean and filter the air stream which is then returned to the ambient. However, there is no factual evidence that the invention "materially enhances the quality of the environment of mankind by contributing to the restoration or maintenance of the basis-life sustaining natural elements." The contribution of petitioner's invention, while beneficial to the environment, does not rise to the level intended by the Rule.

Further correspondence with respect to this matter should be addressed as follows:

By Mail: Mail Stop PETITIONS
Commissioner for Patents
P. O. Box 1450
Alexandria, VA 22313-1450

By hand: U. S. Patent and Trademark Office
Customer Service Window, Mail Stop Petitions
Randolph Building
401 Dulany Street
Alexandria, VA 22314

By FAX: (571) 273-8300

Telephone inquiries concerning this decision should be directed to Irvin Dingle at 571-272-3210.

All other inquiries concerning either the examination or status of the application should be directed to the Technology Center.

The application is being forwarded to the Technology Center Art Unit 1797 for action in its regular turn.

David Bucci
Petitions Examiner
Office of Petitions

UNITED STATES PATENT AND TRADEMARK OFFICE

Commissioner for Patents
United States Patent and Trademark Office
P.O. Box 1450
Alexandria, VA 22313-1450
www.uspto.gov

MORRISON & FOERSTER, LLP
555 WEST FIFTH STREET
SUITE 3500
LOS ANGELES CA 90013-1024

COPY MAILED

SEP 25 2009

OFFICE OF PETITIONS

In re Application of :
Miyazaki, et al. :
Application No. 11/489,210 : DECISION DISMISSING PETITION
Filed: July 19, 2006 :
Attorney Docket No. 393032061300 :

This is a decision on the petition filed August 20, 2009, under 37 CFR 1.10(c) requesting that the above-cited application be accorded a filing date of July 18, 2006.

The petition is **dismissed.**

Any request for reconsideration of this decision must be submitted within TWO (2) MONTHS from the mail date of this decision. Extensions of time under 37 CFR 1.136(a) are permitted. The reconsideration request should include a cover letter entitled "Renewed Petition" under 37 CFR 1.10."

Petitioner alleges that the application was deposited with the United States Postal Service, Express Mail Service on July 18, 2006. In support of the allegation, the petition is accompanied by a copy of the Express Mail postcard with a tracking number EV786079446US showing a "date-in" of July 18, 2006.

Section 1.10(a) of the Title 37 of the Code of Federal Regulations indicates that correspondence received by the Patent and Trademark Office that was delivered by Express Mail will be considered filed in the Office on the date of deposit with the United States Postal Service. Where there is a discrepancy between the date of deposit as shown on the Express Mail label and the filing date accorded the correspondence by the Office, 37 CFR 1.10(c) provides that an applicant may petition to have the Commissioner accord the correspondence a filing date as of the "date in" on Express Mail label. In accordance with 37 CFR 1.10(c), a successful petition must:

> (1) . . . be filed promptly after the person becomes aware that the Office has accorded or will accord a filing date other than the USPS deposit date;
>
> 2) [provide] the number on the Express Mail mailing label was placed on a paper(s) or fee(s) that constituted the correspondence prior to the original mailing by Express Mail; and
>
> (3) . . . include a true copy of the Express Mail mailing label showing the date-in and of any other official notation by the USPS relied upon to show the date of deposit.

The instant petition does not satisfy the requirements of item (1) above.

As to item (1), petitioner has not established that the petition was filed promptly after petitioner discovered that the filing date might be incorrect. Petitioner must explain when petitioner discovered that the application had been accorded an incorrect filing date and what steps were taken to ensure the petition was promptly filed.

Further correspondence with respect to this matter should be addressed as follows:

By mail: Mail Stop Petitions
Commissioner for Patents
Box 1450
Alexandria, VA 22313-1450

By facsimile: (571) 273-8300
Attn: Office of Petitions

Telephone inquiries concerning this decision should be directed to the undersigned at (571) 272-3222.

Kenya A. McLaughlin
Petitions Attorney
Office of Petitions

UNITED STATES PATENT AND TRADEMARK OFFICE

Commissioner for Patents
United States Patent and Trademark Office
P.O. Box 1450
Alexandria, VA 22313-1450
www.uspto.gov

COPY MAILED

DEC 2 2 2009

OFFICE OF PETITIONS

MORRISON & FOERSTER, LLP
555 WEST FIFTH STREET
SUITE 3500
LOS ANGELES CA 90013-1024

In re Application of	:	
Miyazaki, et al.	:	
Application No. 11/489,210	:	ON PETITION
Filed: July 18, 2006	:	
Attorney Docket No. 393032061300	:	

This is a decision on the petition filed November 4, 2009, under 37 CFR 1.10(c) requesting that the above-cited application be accorded a filing date of July 18, 2006.

Petitioner alleges that the application was deposited with the United States Postal Service, Express Mail Service on July 18, 2006. In support of the allegation, the petition is accompanied by a copy of the Express Mail postcard with a tracking number EV786079446US showing a "date-in" of July 18, 2006. The tracking number cited is the same number found on the application transmittal sheet that accompanied the original application papers. The evidence is convincing that the application papers were deposited on July 18, 2006.

In view of the above, the renewed petition is **granted.** The new filing date for the above-cited application is July 18, 2006.

The amount of $400.00 is being refunded to deposit account 03-1952.

The application file is being directed to the Office of Patent Application Processing where the application will be accorded a filing date of July 18, 2006, and a corrected filing receipt issued.

Any inquiries related to this decision should be directed to the undersigned at (571) 272-3222.

Kenya A. McLaughlin
Petitions Attorney
Office of Petitions

UNITED STATES PATENT AND TRADEMARK OFFICE

Commissioner for Patents
United States Patent and Trademark Office
P.O. Box 1450
Alexandria, VA 22313-1450
www.uspto.gov

MORRISON & FOERSTER, LLP
555 WEST FIFTH STREET
SUITE 3500
LOS ANGELES CA 90013-1024

COPY MAILED
DEC 22 2009

In re Application of :
Miyazaki, et al. :
Application No. 11/489,210 : ON PETITION
Filed: July 18, 2006 :
Attorney Docket No. 393032061300 :

This is a decision on the petition filed November 4, 2009, under 37 CFR 1.10(c) requesting that the above-cited application be accorded a filing date of July 18, 2006.

Petitioner alleges that the application was deposited with the United States Postal Service, Express Mail Service on July 18, 2006. In support of the allegation, the petition is accompanied by a copy of the Express Mail postcard with a tracking number EV786079446US showing a "date-in" of July 18, 2006. The tracking number cited is the same number found on the application transmittal sheet that accompanied the original application papers. The evidence is convincing that the application papers were deposited on July 18, 2006.

In view of the above, the renewed petition is **granted**. The new filing date for the above-cited application is July 18, 2006.

The amount of $400.00 is being refunded to deposit account 03-1952.

The application file is being directed to the Office of Patent Application Processing where the application will be accorded a filing date of July 18, 2006, and a corrected filing receipt issued.

Any inquiries related to this decision should be directed to the undersigned at (571) 272-3222.

/Kenya A. McLaughlin/

Kenya A. McLaughlin
Petitions Attorney
Office of Petitions

UNITED STATES PATENT AND TRADEMARK OFFICE

Commissioner for Patents
United States Patent and Trademark Office
P.O. Box 1450
Alexandria, VA 22313-1450
www.uspto.gov

Paper No.

EDWARD ETKIN, ESQ.
Law Office of Edward Etkin, PC
228 West End Avenue, Suite A
Brooklyn NY 11235

MAILED

JUL 26 2010

OFFICE OF PETITIONS

In re Application of :
Zakoshansky et al. :
Application No. 11/489,211 :
Filed: July 19, 2006 : DECISION ON PETITION
Attorney Docket No. 1007-11 : UNDER 37 C.F.R. § 1.137(B)
Title: METHOD FOR REMOVING :
IMPURITIES FROM PHENOL :

This is a decision on the petition filed March 18, 2010, pursuant to 37 C.F.R. § 1.137(b), to revive the above-identified application.

The petition pursuant to 37 C.F.R. § 1.137(b) is **GRANTED**.

The above-identified application became abandoned for failure to reply within the meaning of 37 C.F.R § 1.113 in a timely manner to the final Office action mailed March 4, 2009, which set a shortened statutory period for reply of three months. No extensions of time under the provisions of 37 C.F.R § 1.136(a) were obtained, and no response was received. Accordingly, the above-identified application became abandoned on June 5, 2009. A notice of abandonment was mailed on October 28, 2009.

A grantable petition pursuant to 37 C.F.R. § 1.137(b) must be accompanied by:

(1) The reply required to the outstanding Office action or notice, unless previously filed;
(2) The petition fee as set forth in 37 C.F.R. § 1.17(m);
(3) A statement that the entire delay in filing the required reply from the due date for the reply until the filing of a grantable petition pursuant to this paragraph was unintentional. The

Commissioner may require additional information where there is a question whether the delay was unintentional, and;

(4) Any terminal disclaimer (and fee as set forth in 37 C.F.R. § 1.20(d)) required pursuant to paragraph (d) of this section.

With this petition, Petitioner filed, *inter alia*, a Request for Continued Examination (RCE) along with the required fee, the petition fee, and the proper statement of unintentional delay. The RCE has been accepted as the required reply under 37 C.F.R. § 1.137(b)(1).

As such, the first three requirements of Rule 1.137(b) have been met. The fourth requirement of Rule 1.137(b) is not applicable, as a terminal disclaimer is not required.[1]

The Technology Center will be notified of this decision. The Technology Center's support staff will notify the Examiner of this decision, so that the submission under 37 C.F.R. § 1.114 - the remarks submitted on March 18, 2010 - can be processed in due course.

Petitioner may find it beneficial to view Private PAIR within a fortnight of the present decision to ensure that the revival has been acknowledged by the Technology Center in response to this decision. It is noted that all inquiries with regard to any failure of that change in status should be directed to the Technology Center where that change of status must be effected - **the Office of Petitions cannot effectuate a change of status.**

Telephone inquiries regarding *this decision* should be directed to the undersigned at (571) 272-3225.[2] All other inquiries concerning examination procedures or status of the application should be directed to the Technology Center.

/Paul Shanoski/
Paul Shanoski
Senior Attorney
Office of Petitions

---

1 See Rule 1.137(d).

2 Petitioner will note that all practice before the Office should be in writing, and the action of the Office will be based exclusively on the written record in the Office. See 37 C.F.R. § 1.2. As such, Petitioner is reminded that no telephone discussion may be controlling or considered authority for Petitioner's further action(s).

UNITED STATES PATENT AND TRADEMARK OFFICE

Commissioner for Patents
United States Patent and Trademark Office
P.O. Box 1450
Alexandria, VA 22313-1450
www.uspto.gov

MICHAEL A. GUTH
2-2905 EAST CLIFF DRIVE
SANTA CRUZ CA 95062

COPY MAILED

JUN 20 2008

OFFICE OF PETITIONS

In re Application of	:	
Moffatt et al.	:	
Application No. 11/489,236	:	DECISION ON PETITION
Filed: July 19, 2006	:	
Attorney Docket No. 1008-1D-US	:	

This is a decision on the petition under the unintentional provisions of 37 CFR 1.137(b), filed May 21, 2008, to revive the above-identified application.

The petition is **GRANTED**.

The petition satisfies the requirements of 37 CFR 1.137(b) in that petitioner has supplied (1) the reply in the form of an Amendment, (2) the petition fee, and (3) a proper statement of unintentional delay.

An extension of time under 37 CFR 1.136 must be filed prior to the expiration of the maximum extendable period for reply. See In re Application of S., 8 USPQ2d 1630, 1631 (Comm'r Pats. 1988). Accordingly, since the $525.00 extension of time fee submitted with the petition on May 21, 2008 was subsequent to the maximum extendable period for reply, this fee is unnecessary and will be refunded via treasury check in due course.

Telephone inquiries concerning this decision should be directed to the undersigned at (571) 272-3206.

This matter is being referred to Technology Center 1792 for further examination on the merits.

Liana Walsh
Petitions Examiner
Office of Petitions

UNITED STATES PATENT AND TRADEMARK OFFICE

Commissioner for Patents
United States Patent and Trademark Office
P.O. Box 1450
Alexandria, VA 22313-1450
www.uspto.gov

Customer# 43214
EMPK & SHILOH, LLP
116 JOHN ST.
SUITE 1201
NEW YORK, NY 10038

COPY MAILED

AUG 23 2007

OFFICE OF PETITIONS

In re Application of :
EITAN, Boaz, et al. :
Application No. 11/489,237 : DECISION ON PETITION
Filed: July 18, 2006 : TO WITHDRAW
Attorney Docket No. **ELG-P-9195-US** : FROM RECORD
:

This is a decision on the Request to Withdraw as attorney or agent of record under 37 C.F.R. § 1.36(b), filed June 29, 2007.

The request is **NOT APPROVED**.

A grantable request to withdraw as attorney/agent of record must be signed by every attorney/agent seeking to withdraw or contain a clear indication that one attorney is signing on behalf of another/others. A request to withdraw will not be approved unless at least 30 (thirty) days would remain between the date of approval and the later of the expiration date of a time to file a response or the expiration date of the maximum time period which can be extended under 37 C.F.R. § 1.136(a).

The request to withdraw less than all attorneys appointed by customer number 43214 cannot be approved. The addition and/or deletion of a practitioner from the list of practitioners associated with a Customer Number should be made by submitting a "Request for Customer Number Data Change" (PTO/SB/124) which will result in the addition or deletion of such practitioner from the list of persons authorized to represent any applicant or assignee of the entire interest who appointed all of the practitioners associated with such Customer Number. See MPEP 403 Section I. Customer Number Practice.

All future communications from the Office will continue to be directed to the above-listed address until otherwise notified by applicant.

Telephone inquiries concerning this decision should be directed to Michelle R. Eason at 571-272- 4231.

Terri Williams
Petitions Examiner
Office of Petitions

cc: **Customer# 56639**
EMPK & SHILOH, LLP
116 JOHN ST,
SUITE 1201
NEW YORK, NY 10038

RECEIVED
CENTRAL FAX CENTER

JUN 29 2007

PTO/SB/83 (01-06)
Approved for use through 12/31/2008. OMB 0651-0035
U.S. Patent and Trademark Office, U.S. DEPARTMENT OF COMMERCE
Under the Paperwork Reduction Act of 1995, no persons are required to respond to a collection of information unless it displays a valid OMB control number.

REQUEST FOR WITHDRAWAL AS ATTORNEY OR AGENT AND CHANGE OF CORRESPONDENCE ADDRESS

Application Number	11/489,237
Filing Date	07-18-2006
First Named Inventor	Boaz Eitan
Art Unit	
Examiner Name	
Attorney Docket Number	ELG-P-9195-US

To: Commissioner for Patents
P.O. Box 1450
Alexandria, VA 22313-1450

Please withdraw me as attorney or agent for the above identified patent application, and

☐ all the attorneys/agents of record.

☐ the attorneys/agents (with registration numbers) listed on the attached paper(s), or

☐ the attorneys/agents associated with Customer Number [ ]

NOTE: This box can only be checked when the power of attorney of record in the application is to all the practitioners associated with a customer number.

The reasons for this request are: Instructed to withdraw by client.

CORRESPONDENCE ADDRESS

1. ☐ The correspondence address is NOT affected by this withdrawal.
2. ☑ Change the correspondence address and direct all future correspondence to:

☑ The address associated with Customer Number: 56639

OR

☐ Firm or Individual Name					
Address					
City		State		Zip	
Country					
Telephone			Email		
Signature					
Name	Andrew L. Tiajoloff		Registration No.	31575	
Date	6/13/07		Telephone No.	(212) 490-3285	

NOTE: Withdrawal is effective when approved rather than when received. Unless there are at least 30 days between approval of withdrawal and the expiration date of a time period for response or possible extension period, the request to withdraw is normally disapproved.

This collection of information is required by 37 CFR 1.36. The information is required to obtain or retain a benefit by the public which is to file (and by the USPTO to process) an application. Confidentiality is governed by 35 U.S.C. 122 and 37 CFR 1.11 and 1.14. This collection is estimated to take 12 minutes to complete, including gathering, preparing, and submitting the completed application form to the USPTO. Time will vary depending upon the individual case. Any comments on the amount of time you require to complete this form and/or suggestions for reducing this burden, should be sent to the Chief Information Officer, U.S. Patent and Trademark Office, U.S. Department of Commerce, P.O. Box 1450, Alexandria, VA 22313-1450. DO NOT SEND FEES OR COMPLETED FORMS TO THIS ADDRESS. SEND TO: Commissioner for Patents, P.O. Box 1450, Alexandria, VA 22313-1450.

If you need assistance in completing the form, call 1-800-PTO-9199 and select option 2.

UNITED STATES PATENT AND TRADEMARK OFFICE

UNITED STATES DEPARTMENT OF COMMERCE
United States Patent and Trademark Office
Address: COMMISSIONER FOR PATENTS
P.O. Box 1450
Alexandria, Virginia 22313-1450
www.uspto.gov

HARNESS, DICKEY & PIERCE, P.L.C.
P.O. BOX 828
BLOOMFIELD HILLS, MI 48303

Mail Date: 04/21/2010

Applicant	: Bernd D. Zimmermann	: DECISION ON REQUEST FOR
Patent Number	: 7596998	: RECALCULATION of PATENT
Issue Date	: 10/06/2009	: TERM ADJUSTMENT IN VIEW
Appliction No	: 11/489,249	: OF WYETH AND NOTICE OF INTENT TO
Filed	: 07/19/2006	: ISSUE CERTIFICATE OF CORRECTION
		:

The Request for Recalculation is **GRANTED** to the extent indicated.

The patent term adjustment has been determined to be **408** days. The USPTO will *sua sponte* issue a certificate of correction reflecting the amount of PTA days determined by the recalculation.

Prior to the issuance of the certificate of correction, the USPTO will afford patentee an opportunity to be heard and request reconsideration. Accordingly, patentee has **one month or thirty (30) days**, whichever is longer, to file a request for reconsideration of this patent term adjustment calculation. See 35 U.S.C. 154(b)(3)(B)(ii) and 37 CFR 1.322(a)(4). No extensions of time will be granted under 37 CFR 1.136.

Patentee should use document code PET.OP if electronically filing a request for reconsideration of this patent term adjustment calculation. The patentee must also include the information required by 37 CFR 1.705(b)(2) and the fee required by 37 CFR 1.18(e). If patentee does not file a timely request for reconsideration of this patent term adjustment calculation including the information required by 37 CFR 1.705(b)(2) and the fee required by 37 CFR 1.18(e), the USPTO will issue a certificate of correction reflecting the PTA determination noted above.

Patentee should be aware that in order to preserve the right to review in the United States District Court for the District of Columbia of the USPTO patent term adjustment determination, patentee must ensure that he or she also take the steps required under 35 U.S.C. 154(b)(4)(A) in a timely manner. Nothing in the request for recalculation should be construed as providing an alternative time frame for commencing a civil action under 35 U.S.C. 154(b)(4)(A).

Any questions concerning this decision should be directed to the Office of Patent Legal Administration at 571-272-7702.

UNITED STATES PATENT AND TRADEMARK OFFICE

Commissioner for Patents
United States Patent and Trademark Office
P.O. Box 1450
Alexandria, VA 22313-1450
www.uspto.gov

WILMERHALE/NEW YORK
399 PARK AVENUE
NEW YORK NY 10022

COPY MAILED

FEB 14 2008

OFFICE OF PETITIONS

In re Application of	:	
Robert J. Nighan	:	
Application No. 11/489266	:	
Filing or 371(c) Date: 07/18/2006	:	
Attorney Docket Number:	:	
SPLT-P02-003	:	ON PETITION

This is a decision on the Petition to Revive an Unintentionally Abandoned Application Under 37 CFR 1.137(b), filed May 29, 2007. The delay in treating this petition is regretted.

This Petition is hereby **granted**.

The above-identified application became abandoned for failure to timely and properly reply to the Notice to File Missing Parts of Nonprovisional Application ("Notice"), mailed August 8, 2006. The Notice required the filing fee and and oath or declaration, along with additional claim fees and surcharges for late filing, and set a two (2) month period for reply. Extensions of time were available under 37 CFR 1.136(a). No response having been received, the application became abandoned Octiber 10, 2006. A Notice of Abandonment was mailed April 19, 2007.

Applicant files the present petition response to the Notice. The petition satisfies the conditions for revival pursuant to the provisions of 37 CFR 1.137(b) in that the petition includes (1) the replies; (2) the petition fee; and (3) the required statement of unintentional delay. Accordingly, the reply is accepted as having been unintentionally delayed.

This application is being referred to the Office of Patent Application Processing for processing of the replies to the Notice in due course.

Telephone inquiries concerning this decision should be directed to the undersigned at (571) 272-3232.

Derek L. Woods
Attorney
Office of Petitions

UNITED STATES PATENT AND TRADEMARK OFFICE

Commissioner for Patents
United States Patent and Trademark Office
P.O. Box 1450
Alexandria, VA 22313-1450
www.uspto.gov

PATTI, HEWITT & AREZINA, LLC
ONE NORTH LASALLE STREET
44TH FLOOR
CHICAGO, IL 60602

COPY MAILED
NOV 19 2008

In re Application of :
Peter Dragic :
Application No. 11/489,271 : ON PETITION
Filed: July 19, 2006 :
Attorney Docket No. NEO-051145/NEO-101 :

This is a decision on the petition under 37 CFR 1.137(b), filed on September 25, 2008, to revive the above-identified application.

The application became abandoned for failure to file a proper response to the final Office action mailed January 4, 2008. A Notice of Abandonment was mailed on September 24, 2008.

The petition satisfies the requirements of 37 CFR 1.137(b) in that petitioner has supplied (1) the reply in the form of a Request for Continued Examination (RCE) under 37 CFR 1.114, with the $405 filing fee; (2) the petition fee of $770; and (3) an adequate statement of unintentional delay. Therefore, the petition is **GRANTED**.

This application is being revived for consideration of the RCE filed on September 25, 2008.

Since the RCE filed on August 14, 2008 is considered as improper, the $810 fee is unnecessary and petitioner may request a refund of this fee by writing to the following address: Mail Stop 16, Commissioner for Patents, P. O. Box 1450, Alexandria, VA 22313-1450. A copy of this decision should accompany petitioner's request.

The application file is being referred to Technology Center Art Unit 3663, for processing of the RCE and for appropriate action by the Examiner in the normal course of business on the amendment submitted in accordance with 37 CFR 1.114.

Telephone inquiries concerning this decision should be directed to the undersigned at (571) 272-3226.

Andrea Smith
Petitions Examiner
Office of Petitions

UNITED STATES PATENT AND TRADEMARK OFFICE

Commissioner for Patents
United States Patent and Trademark Office
P.O. Box 1450
Alexandria, VA 22313-1450
www.uspto.gov

JAMES Y.C. SZE
DUANE MORRIS, LLP
SUITE 900
101 W. BROADWAY
SAN DIEGO, CA 92101-8285

MAILED

JUL 13 2009

OFFICE OF PETITIONS

In re Application of
Walter E. Pelton et al
Application No. 11/489,274
Filed: July 18, 2006
Attorney Docket No. R0815-00003

DECISION ON PETITION
TO WITHDRAW
FROM RECORD

This is a decision on the Request to Withdraw as attorney or agent of record under 37 C.F.R. § 1.36(b), filed May 29, 2009.

The request is **APPROVED**.

The request was signed by James Y.C. Sze on behalf of all attorneys of record who are associated with customer No. 53897.

Applicant is reminded that there is no attorney of record at this time.

All future correspondence will be directed to inventor Walter E. Pelton at the address indicated below.

Telephone inquiries concerning this decision should be directed to Irvin Dingle at (571) 272-3210.

Irvin Dingle
Petitions Examiner
Office of Petitions

cc: Walter E. Pelton
44870 Osgood Road
Fremont, CA 94539

UNITED STATES PATENT AND TRADEMARK OFFICE

Commissioner for Patents
United States Patent and Trademark Office
P.O. Box 1450
Alexandria, VA 22313-1450
www.uspto.gov

In re Application of
Walter E. Pelton

Application No. 11489274

Filed: July 18,2006

Attorney Docket No. R0815-00003

:
:
:DECISION ON PETITION TO MAKE SPECIAL
:UNDER 37 CFR 1.102(c)(1)
:

This is a decision on the electronic petition under 37 CFR 1.102 (c)(1), filed 24-JUL-2010 to make the above-identified application special based on applicant's age as set forth in MPEP § 708.02, Section IV.

The petition is **GRANTED**.

A grantable petition to make an application special under 37 CFR 1.102(c)(1), MPEP § 708.02, Section IV: Applicant's Age must include a statement by applicant or a registered practitioner having evidence that applicant is at least 65 years of age. No fee is required.

Accordingly, the above-identified application has been accorded "special" status and will be taken up for action by the examiner upon the completion of all pre-examination processing.

Telephone inquiries concerning this electronic decision should be directed to the Electronic Business Center at 866-217-9197.

All other inquiries concerning either the examination or status of the application should be directed to the Technology Center.

UNITED STATES PATENT AND TRADEMARK OFFICE

COMMISSIONER FOR PATENTS
UNITED STATES PATENT AND TRADEMARK OFFICE
P.O. BOX 1450
ALEXANDRIA, VA 22313-1450
WWW.USPTO.GOV

Paper No. None

MCDONNELL BOEHNEN HULBERT & BERGHOFF LLP
300 S. WACKER DRIVE
32ND FLOOR
CHICAGO IL 60606

COPY MAILED
MAY 25 2007
OFFICE OF PETITIONS

In re Application of :
Alvin Lim, Jane Laurie, :
Zhenxing Dong, Donald R. :
Jamieson, and Damir Naden :
Application No. 11/489,276 :
Filed: July 19, 2006 : DECISION ON PETITION
Attorney Docket No. 07-2507 :
Title: APPARATUS AND METHOD FOR :
SIMULATION OF COMBUSTION :
EFFECTS IN A FIREPLACE :

This is in response to the petition pursuant to 37 C.F.R. §1.47(a)[1], filed February 12, 2007.

On July 19, 2006, the application was filed, identifying Alvin Lim, Jane Laurie, Zhenxing Dong, Donald R. Jamieson, and Damir

1A grantable petition under 37 C.F.R. §1.47(a) requires:
(1) the petition fee of $200;
(2) a surcharge of either $65 or $130 if the petition is not filed at the time of filing the application, as set forth in 37 C.F.R. § 1.16(e);
(3) a statement of the last known address of the non-signing inventors;
(4) either
a) proof that a copy of the entire application (specification, claims, drawings, and the oath or declaration) was sent or given to the non-signing inventor for review and proof that the non-signing inventor refuses to join in the application or
b) proof that the non-signing inventor cannot be found or reached after diligent effort;
(5) a declaration which complies with 37 CFR §1.63.

Naden as joint inventors. The application was deposited without an oath or declaration. On August 9, 2006, a "Notice to File Missing Parts of Nonprovisional Application - Filing Date Granted" (Notice) was mailed, indicating that a fully executed oath or declaration and the associated surcharge were required. This Notice further required the submission of additional claim fees, the basic filing fee, the search fee, and the examination fee, and set a two-month period for reply.

Along with the present petition, Petitioner has submitted, *inter alia*, a declaration that has been executed by each of the inventors but for Ms. Naden, along with the surcharge associated with the late submission of the same, additional claim fees, the basic filing fee, the search fee, the examination fee, a copy of a letter and an e-mail, and a statement of facts. Petitioner has further provided a four-month extension of time, in order to make timely this response (it is noted that the transmittal letter contains a certificate of mailing dated February 9, 2007). The petition fee has been charged to Petitioner's Deposit Account.

Petitioner has met requirements (1) - (3) of Rule §1.47(a).

Regarding the fourth requirement of Rule §1.47(a), it does not appear that a complete copy of the application was sent to the last-known residential addresses of the non-signing inventor. Both the statement of facts and the letter itself make it clear that a complete copy of the application was sent to Ms. Naden's employer.

It is not clear if the non-signing inventor actually received the above-mentioned papers. The correspondence described above is not sufficient to make the necessary showing that the non-signing inventor was ever presented with a complete copy of the application and a declaration or oath, for they were not mailed to the required location, the last known residence of the non-signing inventor[2]. It is noted that the declaration lists Ms. Naden's residential address for both the residence and the Post Office address. As such, the Office requires these materials to be sent to the residence of the inventor, as that is most likely the location where she might receive mail.

It follows that one cannot refuse to sign a letter which one has not seen.

Thus, on renewed petition, applicant must establish that either the entire application package was sent to the last known

2 See MPEP 409.03(d) and (e).

residential address, or that the non-signing inventor acknowledged receipt of the package at her business address, or that she normally received correspondence not at her residence, but rather at her place of business - coupled with a statement of facts from one having firsthand knowledge that the non-signing inventor customarily prefers to have her correspondence sent to her place of employment. If the latter is the case however, a new declaration will be required, which lists CFM Corporation as the mailing address of the non-signing inventor. If neither is possible, a copy of the complete application papers should be sent by certified mail return-receipt requested to the last known *residential* address of the non-signing inventor, or, if the inventor is represented by counsel, to the address of the non-signing inventor's attorney. Documentary evidence, including copies of the transmittal cover letters and return mail receipts, should be made part of the record.

It follows that since it has not been shown that a complete copy of the application was sent to the last-known residential address of the non-signing inventor, one cannot refuse to sign something which one has not seen. A refusal by an inventor to sign an oath or declaration when the inventor has not been presented with the application papers does not itself suggest that the inventor is refusing to join the application unless it is clear that the inventor understands exactly what he or she is being asked to sign and refuses to accept the application papers. It is reasonable to require that the inventor be presented with the application papers before a petition under Rule §1.47 is granted since such a procedure ensures that the inventor is apprised of the application to which the oath or declaration is directed[3].

Regarding the fifth requirement of Rule §1.47(a), the declaration gives the address of the non-signing inventor as one that is different from that which is listed on the second page of the petition. Assuming that the statement of facts is to be believed, Petitioner will need to submit a declaration which contains the correct address for the non-signing inventor. This declaration might further need to also contain the address of the CFM Corporation, if this is the proper mailing address for this individual.

Petitioner has failed to fully comply with the provisions of this title. It follows that the present petition must be **DISMISSED**.

On renewed petition, it should be established that a complete copy of the application was sent to the non-

3 In re Gray, 115 USPQ 80 (Comm'r Pat. 1956).

signing inventor. Petitioner should note that any statement which pertains to the presentation should be made by one having firsthand knowledge of the event. Statements based on hearsay are not normally accepted.

Any reply must be submitted within **TWO MONTHS** from the mail date of this decision. Extensions of time under 37 C.F.R. §1.136(a) are permitted. The reply should include a cover letter entitled "Renewed Petition Under 37 C.F.R. §1.47(a)". This is not a final agency action within the meaning of 5 U.S.C §704.

The renewed petition should indicate in a prominent manner that the attorney handling this matter is Paul Shanoski, and may be submitted by mail[4], hand-delivery[5], or facsimile[6].

If responding by mail, Petitioner is advised not to place the undersigned's name on the envelope. Only the information that appears in the footnote should be included - adding anything else to the address will delay the delivery of the response to the undersigned.

Telephone inquiries regarding *this decision* should be directed to the undersigned at (571) 272-3225[7]. All other inquiries concerning examination procedures or status of the application should be directed to the Technology Center.

Paul Shanoski
Senior Attorney
Office of Petitions
United States Patent and Trademark Office

---

4 Mail Stop Petition, Commissioner for Patents, United States Patent and Trademark Office, P.O. Box 1450, Alexandria, VA, 22313-1450.
5 Customer Window, Randolph Building, 401 Dulaney Street, Alexandria, VA, 22314.
6 (571) 273-8300- please note this is a central facsimile number.
7 Petitioner will note that all practice before the Office should be in writing, and the action of the Office will be based exclusively on the written record in the Office. See 37 C.F.R. §1.2. As such, Petitioner is reminded that no telephone discussion may be controlling or considered authority for any further action(s) of Petitioner.

UNITED STATES PATENT AND TRADEMARK OFFICE

COMMISSIONER FOR PATENTS
UNITED STATES PATENT AND TRADEMARK OFFICE
P.O. BOX 1450
ALEXANDRIA, VA 22313-1450
WWW.USPTO.GOV

Paper No. None

MCDONNELL BOEHNEN HULBERT & BERGHOFF LLP
300 S. WACKER DRIVE
32ND FLOOR
CHICAGO IL 60606

COPY MAILED

SEP 21 2007

OFFICE OF PETITIONS

In re Application of :
Alvin Lim, Jane Laurie, :
Zhenxing Dong, Donald R. :
Jamieson, and Damir Naden :
Application No. 11/489,276 :
Filed: July 19, 2006 : DECISION ON
Attorney Docket No. 07-2507 : RENEWED PETITION
Title: APPARATUS AND METHOD FOR :
SIMULATION OF COMBUSTION :
EFFECTS IN A FIREPLACE :

This is in response to the renewed petition pursuant to 37 C.F.R. §1.47(a)[1], filed August 30, 2007.

On July 19, 2006, the application was filed, identifying Alvin Lim, Jane Laurie, Zhenxing Dong, Donald R. Jamieson, and Damir

1A grantable petition under 37 C.F.R. §1.47(a) requires:
(1) the petition fee of $200;
(2) a surcharge of either $65 or $130 if the petition is not filed at the time of filing the application, as set forth in 37 C.F.R. § 1.16(e);
(3) a statement of the last known address of the non-signing inventors;
(4) either
a) proof that a copy of the entire application (specification, claims, drawings, and the oath or declaration) was sent or given to the non-signing inventor for review and proof that the non-signing inventor refuses to join in the application or
b) proof that the non-signing inventor cannot be found or reached after diligent effort;
(5) a declaration which complies with 37 C.F.R. §1.63.

Naden as joint inventors. The application was deposited without an oath or declaration. On August 9, 2006, a "Notice to File Missing Parts of Nonprovisional Application - Filing Date Granted" (Notice) was mailed, indicating that a fully executed oath or declaration and the associated surcharge were required. This Notice set a two-month period for reply.

The original petition was filed on February 12, 2007, and was dismissed via the mailing of a decision on May 25, 2007 for failing to meet requirements (4) - (5) of Rule § 1.47(a).

With this renewed petition, Petitioner has sent a complete copy of the application to the residential address of non-signing inventor Naden, and has included a declaration that contains the correct address for this individual.

As such, Petitioner has met requirement (4) of Rule § 1.47(a).

Regarding the fifth requirement, the declaration cannot be accepted as it fails to contains the citizenship for the non-signing inventor, and as such, the declaration fails to comply with 37 C.F.R. § 1.63(a)(3). Moreover, it does not appear that an Application Data Sheet (ADS) has been provided to the Office.

It is noted that the declaration that was provided with the original petition also fails to contain this information - the Office regrets not noticing this deficiency earlier.

It follows that this renewed petition must be **DISMISSED.**

Any reply must be submitted within **TWO MONTHS** from the mail date of this decision. Extensions of time under 37 C.F.R. § 1.136(a) are permitted. The reply should include a cover letter entitled "Second Renewed Petition Under 37 C.F.R. § 1.47(a)". This is not a final agency action within the meaning of 5 U.S.C § 704.

On second renewed petition, Petitioner should include a declaration that is in compliance with 37 C.F.R. § 1.63(a)(3). Alternatively, Petitioner may submit an ADS.

The second renewed petition should indicate in a prominent manner that the attorney handling this matter is Paul Shanoski, and may be submitted by mail[2], hand-delivery[3], or facsimile[4]. Registered

2 Mail Stop Petition, Commissioner for Patents, United States Patent and Trademark Office, P.O. Box 1450, Alexandria, VA, 22313-1450.
3 Customer Window, Randolph Building, 401 Dulaney Street, Alexandria, VA, 22314.
4 (571) 273-8300- please note this is a central facsimile number.

users of EFS-Web may alternatively submit a response to this decision via EFS-Web[5].

If responding by mail, Petitioner is advised not to place the undersigned's name on the envelope. Only the information that appears in the footnote should be included - adding anything else to the address will delay the delivery of the response to the undersigned.

Telephone inquiries **regarding this decision** should be directed to the undersigned at (571) 272-3225[6]. All other inquiries concerning examination procedures or status of the application should be directed to the Technology Center.

Paul Shanoski
Senior Attorney
Office of Petitions
United States Patent and Trademark Office

5 https://sportal.uspto.gov/authenticate/authenticateuserlocalepf.html
6 Petitioner will note that all practice before the Office should be in writing, and the action of the Office will be based exclusively on the written record in the Office. See 37 C.F.R. § 1.2. As such, Petitioner is reminded that no telephone discussion may be controlling or considered authority for any further action(s) of Petitioner.

UNITED STATES PATENT AND TRADEMARK OFFICE

Commissioner for Patents
United States Patent and Trademark Office
P.O. Box 1450
Alexandria, VA 22313-1450
www.uspto.gov

Paper No. None

MCDONNELL BOEHNEN HULBERT & BERGHOFF LLP
300 S. WACKER DRIVE
32ND FLOOR
CHICAGO IL 60606

COPY MAILED

NOV 14 2007

OFFICE OF PETITIONS

In re Application of :
Alvin Lim, Jane Laurie, :
Zhenxing Dong, Donald R. :
Jamieson, and Damir Naden :
Application No. 11/489,276 :
Filed: July 19, 2006 :
Attorney Docket No. 07-2507 :
Title: APPARATUS AND METHOD FOR :
SIMULATION OF COMBUSTION :
EFFECTS IN A FIREPLACE :

DECISION ON SECOND RENEWED PETITION

This is in response to the second renewed petition pursuant to 37 C.F.R. §1.47(a)[1], filed October 17, 2007.

On July 19, 2006, the application was filed, identifying Alvin Lim, Jane Laurie, Zhenxing Dong, Donald R. Jamieson, and Damir Naden as joint inventors. The application was deposited without an oath or declaration. On August 9, 2006, a "Notice to File Missing Parts of Nonprovisional Application - Filing Date

---

1A grantable petition under 37 C.F.R. §1.47(a) requires:
(1) the petition fee of $200;
(2) a surcharge of either $65 or $130 if the petition is not filed at the time of filing the application, as set forth in 37 C.F.R. § 1.16(e);
(3) a statement of the last known address of the non-signing inventors;
(4) either
a) proof that a copy of the entire application (specification, claims, drawings, and the oath or declaration) was sent or given to the non-signing inventor for review and proof that the non-signing inventor refuses to join in the application or
b) proof that the non-signing inventor cannot be found or reached after diligent effort;
(5) a declaration which complies with 37 C.F.R. §1.63.

Granted" (Notice) was mailed, indicating that a fully executed oath or declaration and the associated surcharge were required. This Notice set a two-month period for reply.

An original petition was filed on February 12, 2007, and was dismissed via the mailing of a decision on May 25, 2007 for failing to meet requirements (4) - (5) of Rule § 1.47(a). A renewed petition was filed on August 30, 2007, and was dismissed via the mailing of a decision on September 21, 2007 for failing to meet requirement (5) of Rule § 1.47(a): the declaration failed to contain the citizenship for the non-signing inventor.

With this second renewed petition, Petitioner has submitted a declaration that includes this information. Consequently, Petitioner has met each of the five requirements of Rule § 1.47(a), and has submitted all required fees. Therefore, this fifth renewed petition pursuant to Rule § 1.47(a) is **GRANTED** and this application is hereby accorded Rule § 1.47 status.

This Office will forward notice of this application's filing to the non-signing inventor at the address given on the declaration. Notice of the filing of this application will also be published in the Official Gazette.

The Technology Center will be notified of this decision. The Technology Center's support staff will notify the Examiner of this decision, so that the present application can receive further processing in due course.

Telephone inquiries **regarding this decision** should be directed to the undersigned at (571) 272-3225[2].

Paul Shanoski
Senior Attorney
Office of Petitions
United States Patent and Trademark Office

2 Petitioner will note that all practice before the Office should be in writing, and the action of the Office will be based exclusively on the written record in the Office. See 37 C.F.R. § 1.2. As such, Petitioner is reminded that no telephone discussion may be controlling or considered authority for any further action(s) of Petitioner.

UNITED STATES PATENT AND TRADEMARK OFFICE

Commissioner for Patents
United States Patent and Trademark Office
P.O. Box 1450
Alexandria, VA 22313-1450
www.uspto.gov

Robert Berliner
BERLINER & ASSOCIATES
Thirty-First Floor
555 West Fifth Street
Los Angeles CA 90013

COPY MAILED

JAN 0 8 2007

OFFICE OF PETITIONS

In re Application of :
Norbeck, et al. :
Application No. 11/489,299 : ON PETITION
Deposited: July 18, 2006 :
Attorney Docket No. 1279-449 :
For: METHOD FOR HIGH ENERGY
DENSITY BIOMASS-WATER SLURRY

This is a decision on the petition under 37 CFR 1.53(e), filed August 21, 2006, requesting that the above-identified application be accorded a filing date of July 18, 2006.

The petition under 37 CFR 1.53(e) is **GRANTED**.

The application was deposited on July 18, 2006. On August 8, 2006, the Office of Initial Patent Examination mailed a Notice informing petitioners, *inter alia*, that no filing date had been accorded to the application papers deposited on July 18, 2006 because no drawings were present, as is required by 35 U.S.C. 113.

In response to the Notice, petitioners timely filed the present petition. Petitioners request that the above-identified application be accorded a filing date of July 18, 2006 on the basis that 1 page of drawings was received in the Patent and Trademark Office (PTO) on July 18, 2006. In support, the petition is accompanied by a copy of applicants' itemized postcard receipt showing an Office of Initial Patent Examination generated barcode citing July 18, 2006 as the date of receipt. The postcard lists, *inter alia*, that the filing included 1 page of drawings.

The return postcard constitutes *prima facie* evidence that 1 page of drawings was filed on July 18, 2006. MPEP 503. Accordingly, the request is granted. No petition fee has been or will be charged in connection with this matter.

It is noted that the application contains process claims. Therefore, even if petitioners did **not** have a postcard receipt proving drawings were filed on July 18, 2006, the application would have been entitled to a filing date without drawings.

The application is being returned to Office of Initial Patent Examination for further processing, with a filing date of **July 18, 2006**, using the copy of the 1 page of drawings submitted with the instant petition. Office records will be corrected to show that 1 page of drawings was present on filing.

Any inquiries pertaining to this matter may be directed to the undersigned at (571) 272-3230.

Shirene Willis Brantley
Senior Petitions Attorney
Office of Petitions

UNITED STATES PATENT AND TRADEMARK OFFICE

UNITED STATES DEPARTMENT OF COMMERCE
United States Patent and Trademark Office
Address: COMMISSIONER FOR PATENTS
P.O. Box 1450
Alexandria, Virginia 22313-1450
www.uspto.gov

MCANDREWS HELD & MALLOY, LTD
500 WEST MADISON STREET
SUITE 3400
CHICAGO, IL 60661

Mail Date: 04/21/2010

Applicant	: Eliezer Aloni	: DECISION ON REQUEST FOR
Patent Number	: 7596628	: RECALCULATION of PATENT
Issue Date	: 09/29/2009	: TERM ADJUSTMENT IN VIEW
Appliction No	: 11/489,300	: OF WYETH AND NOTICE OF INTENT TO
Filed	: 07/18/2006	: ISSUE CERTIFICATE OF CORRECTION
		:

The Request for Recalculation is **GRANTED** to the extent indicated.

The patent term adjustment has been determined to be **533** days. The USPTO will *sua sponte* issue a certificate of correction reflecting the amount of PTA days determined by the recalculation.

Prior to the issuance of the certificate of correction, the USPTO will afford patentee an opportunity to be heard and request reconsideration. Accordingly, patentee has **one month or thirty (30) days**, whichever is longer, to file a request for reconsideration of this patent term adjustment calculation. See 35 U.S.C. 154(b)(3)(B)(ii) and 37 CFR 1.322(a)(4). No extensions of time will be granted under 37 CFR 1.136.

Patentee should use document code PET.OP if electronically filing a request for reconsideration of this patent term adjustment calculation. The patentee must also include the information required by 37 CFR 1.705(b)(2) and the fee required by 37 CFR 1.18(e). If patentee does not file a timely request for reconsideration of this patent term adjustment calculation including the information required by 37 CFR 1.705(b)(2) and the fee required by 37 CFR 1.18(e), the USPTO will issue a certificate of correction reflecting the PTA determination noted above.

Patentee should be aware that in order to preserve the right to review in the United States District Court for the District of Columbia of the USPTO patent term adjustment determination, patentee must ensure that he or she also take the steps required under 35 U.S.C. 154(b)(4)(A) in a timely manner. Nothing in the request for recalculation should be construed as providing an alternative time frame for commencing a civil action under 35 U.S.C. 154(b)(4)(A).

Any questions concerning this decision should be directed to the Office of Patent Legal Administration at 571-272-7702.

UNITED STATES PATENT AND TRADEMARK OFFICE

Commissioner for Patents
United States Patent and Trademark Office
P.O. Box 1450
Alexandria, VA 22313-1450
www.uspto.gov

CRAIG W. RODDY
HALLIBURTON ENERGY SERVICES
P.O. BOX 1431
DUNCAN OK 73536-0440

COPY MAILED
OCT 23 2006
OFFICE OF PETITIONS

In re Application of :
JITEN, et al. :
Application No. 11/489,320 : DECISION ON PETITION
Filed: July 19, 2006 : TO MAKE SPECIAL UNDER
Attorney Docket No. 2003-IP-009903U1P1D1 : 37 CFR 1.102(c)(1)
:

This is a decision on the petition under 37 CFR 1.102(c)(1), filed August 23, 2006, to make the above-identified application special based on applicant's age as set forth in M.P.E.P. § 708.02, Section IV.

The petition is **GRANTED**.

A grantable petition to make an application special under 37 CFR 1.102(c)(1) and MPEP § 708.02, Section IV: Applicant's Age, must be accompanied by evidence showing that at least one of the applicants is 65 years of age, or more, such as a birth certificate or a statement by applicant. No fee is required.

The instant petition includes an affidavit from Jiten Chatterji, attesting to his age. Accordingly, the above-identified application has been accorded "special" status.

Telephone inquiries concerning this decision should be directed to Monica A. Graves at 571-272-7253.

All other inquiries concerning either the examination or status of the application should be directed to the Technology Center.

The application is being forwarded to the Technology Center Art Unit 3676 for action on the merits commensurate with this decision.

David Bucci
Petitions Examiner
Office of Petitions

UNITED STATES PATENT AND TRADEMARK OFFICE

UNITED STATES DEPARTMENT OF COMMERCE
United States Patent and Trademark Office
Address: COMMISSIONER FOR PATENTS
P.O. Box 1450
Alexandria, Virginia 22313-1450
www.uspto.gov

BUCKNAM AND ARCHER
1077 NORTHERN BOULEVARD
ROSLYN, NY 11576

Mail Date: 04/21/2010

Applicant	: Chung Hsien Hsieh	: DECISION ON REQUEST FOR
Patent Number	: 7610719	: RECALCULATION of PATENT
Issue Date	: 11/03/2009	: TERM ADJUSTMENT IN VIEW
Appliction No	: 11/489,329	: OF WYETH AND NOTICE OF INTENT TO
Filed	: 07/19/2006	: ISSUE CERTIFICATE OF CORRECTION
		:

The Request for Recalculation is **GRANTED** to the extent indicated.

The patent term adjustment has been determined to be **317** days. The USPTO will *sua sponte* issue a certificate of correction reflecting the amount of PTA days determined by the recalculation.

Prior to the issuance of the certificate of correction, the USPTO will afford patentee an opportunity to be heard and request reconsideration. Accordingly, patentee has **one month or thirty (30) days**, whichever is longer, to file a request for reconsideration of this patent term adjustment calculation. See 35 U.S.C. 154(b)(3)(B)(ii) and 37 CFR 1.322(a)(4). No extensions of time will be granted under 37 CFR 1.136.

Patentee should use document code PET.OP if electronically filing a request for reconsideration of this patent term adjustment calculation. The patentee must also include the information required by 37 CFR 1.705(b)(2) and the fee required by 37 CFR 1.18(e). If patentee does not file a timely request for reconsideration of this patent term adjustment calculation including the information required by 37 CFR 1.705(b)(2) and the fee required by 37 CFR 1.18(e), the USPTO will issue a certificate of correction reflecting the PTA determination noted above.

Patentee should be aware that in order to preserve the right to review in the United States District Court for the District of Columbia of the USPTO patent term adjustment determination, patentee must ensure that he or she also take the steps required under 35 U.S.C. 154(b)(4)(A) in a timely manner. Nothing in the request for recalculation should be construed as providing an alternative time frame for commencing a civil action under 35 U.S.C. 154(b)(4)(A).

Any questions concerning this decision should be directed to the Office of Patent Legal Administration at 571-272-7702.

UNITED STATES PATENT AND TRADEMARK OFFICE

Commissioner for Patents
United States Patent and Trademark Office
P.O. Box 1450
Alexandria, VA 22313-1450
www.uspto.gov

ROPES & GRAY LLP
PATENT DOCKETING 39/361
1211 AVENUE OF THE AMERICAS
NEW YORK, NY 10036-8704

COPY MAILED

MAR 07 2008

OFFICE OF PETITIONS

In re Application of :
Adrian J. Drexler, et al. :
Application No.: 11/489,367 : ON PETITION
Filed: July 18, 2006 :
Attorney Docket No.: MIC-44 DIV.3 :

This is a decision on the petition, filed March 6, 2008, under 37 CFR 1.313(c)(2) to withdraw the above-identified application from issue after payment of the issue fee.

The petition is **GRANTED**.

The above-identified application is withdrawn from issue for consideration of a submission under 37 CFR 1.114 (request for continued examination). See 37 CFR 1.313(c)(2).

Petitioner is advised that the issue fee paid on February 28, 2008, cannot be refunded. If, however, the above-identified application is again allowed, petitioner may request that it be applied towards the issue fee required by the new Notice of Allowance. [1]

Telephone inquiries relating to this decision should be directed to the undersigned at (571) 272-3204.

The application is being referred to Technology Center AU 2816 for further processing of the request for continued examination under 37 CFR 1.114 and for consideration of the concurrently filed Information Disclosure Statement (IDS).

Sherry D. Brinkley
Petitions Examiner
Office of Petitions

[1] *The request to apply the issue fee to the new Notice may be satisfied by completing and returning the new Part B – Fee(s) Transmittal Form (along with any balance due at the time of submission). Petitioner is advised that the Issue Fee Transmittal Form must be completed and timely submitted to avoid abandonment of the application.*

UNITED STATES PATENT AND TRADEMARK OFFICE

UNITED STATES DEPARTMENT OF COMMERCE
United States Patent and Trademark Office
Address: COMMISSIONER FOR PATENTS
P.O. Box 1450
Alexandria, Virginia 22313-1450
www.uspto.gov

APPLICATION NO.	FILING DATE	FIRST NAMED INVENTOR	ATTORNEY DOCKET NO.	CONFIRMATION NO.
11/489,381	07/19/2006	Sanh D. Tang	MI22-3318	1732

7590 10/18/2007

WELLS ST. JOHN P.S.
601 W. FIRST AVENUE, SUITE 1300
SPOKANE, WA 99201

EXAMINER	
CHEN, JACK S J	
ART UNIT	**PAPER NUMBER**
2813	
MAIL DATE	**DELIVERY MODE**
10/18/2007	PAPER

DECISION DISMISSING PETITION UNDER 37 CFR 1.138(d)

The declaration of express abandonment will not be recognized

This is in response to the petition under 37 CFR 1.138(d), requesting for a refund of any previously paid search fee and excess claims fee in the above-identified application.

The petition is dismissed.

The express abandonment will **not** be recognized for the reason(s) indicated below:

1. ☒ The petition was not filed in sufficient time to permit the appropriate officials to recognize the abandonment before an examination has been made of the application. See 37 CFR 1.138(d).

2. ☐ The petition was not signed by a party authorized by 37 CFR 1.33(b)(1), (3) or (4).

3. ☐ The application is not an application filed under 35 U.S.C. 111(a) on or after December 8, 2004.

4. ☐ The petition for express abandonment under 1.138(d) is dismissed because the applicant did not pay any search fee and excess claims fees in the above-identified application.

Telephone inquiries should be directed to the Office of Data Management at (571) 272-4200.

Patent Publication Branch
Office of Data Management

UNITED STATES PATENT AND TRADEMARK OFFICE

Commissioner for Patents
United States Patent and Trademark Office
P.O. Box 1450
Alexandria, VA 22313-1450
www.uspto.gov

Morrison & Foerster, LLP
755 Page Mill Road
Palo Alto, CA 94304-1018

COPY MAILED

MAY 2 1 2008

OFFICE OF PETITIONS

In re Application of
Yonghao Chen
Application No. 11/489,384
Filed: July 18, 2006
Attorney Docket No. 188122008500

DECISION ON PETITION
TO WITHDRAW
FROM RECORD

This is a decision on the Request to Withdraw as attorney or agent of record under 37 C.F.R. § 1.36(b), filed February 6, 2008.

The request is **NOT APPROVED** as moot.

A review of the file record indicates that the power of attorney to Norman R. Klivans and all attorneys/agents of record has been revoked by the assignee of the patent application on March 5, 2008. Accordingly, the request to withdraw under 37 C.F.R. § 1.36(b) is moot.

All future communications from the Office will continue to be directed to the below-listed address until otherwise notified by applicant.

Telephone inquires concerning this decision should be directed to Kimberly Inabinet at 571-272-4618.

Kimberly Inabinet
Petitions Examiner
Office of Petitions

cc: Cadence Design Systems, Inc.
c/o Novak Druce and Quigg, LLP
1000 Louisiana Street
Fifty-Third Floor
Houston, TX 77002

UNITED STATES PATENT AND TRADEMARK OFFICE

Commissioner for Patents
United States Patent and Trademark Office
P.O. Box 1450
Alexandria, VA 22313-1450
www.uspto.gov

MORRISON & FOERSTER LLP
755 PAGE MILL RD
PALO ALTO, CA 94304-1018

COPY MAILED

MAY 16 2008

OFFICE OF PETITIONS

In re Application of :
CHEN, Yonghao :
Application No. 11/489,385 : DECISION ON PETITION
Filed: January 09, 2004 : TO WITHDRAW
Attorney Docket No. **8195.022.NPUS00** : FROM RECORD
:

This is a decision on the Request to Withdraw as attorney or agent of record under 37 C.F.R. § 1.36(b), filed February 06, 2008.

The request is **NOT APPROVED** as moot.

A review of the file record indicates that the power of attorney to MORRISON & FOERSTER LLP has been revoked by the assignee of the patent application on March 05, 2008. Accordingly, the request to withdraw under 37 C.F.R. § 1.36(b) is moot.

All future communications from the Office will continue to be directed to the below-listed address until otherwise notified by applicant.

Telephone inquires concerning this decision should be directed to Tredelle Jackson at 571-272-2783.

Tredelle D. Jackson
Petitions Examiner
Office of Petitions

cc: **CADENCE DESIGN SYSTEMS, INC.**
C/O NOVAK DRUCE AND QUIGG LLP
1000 LOUISIANA STREET
FIFTY-THIRD FLOOR
HOUSTON TX 77002

UNITED STATES PATENT AND TRADEMARK OFFICE

COMMISSIONER FOR PATENTS
UNITED STATES PATENT AND TRADEMARK OFFICE
P.O. BOX 1450
ALEXANDRIA, VA 22313-1450
www.uspto.gov

COPY MAILED

SEP 14 2009

OFFICE OF PETITIONS

MCANDREWS HELD & MALLOY, LTD
500 WEST MADISON STREET
SUITE 3400
CHICAGO IL 60661

In re Application of :
Aloni, et al. :
Application No. 11/489,407 : DECISION ON PETITION
Filed: July 18, 2006 : UNDER 37 CFR 1.78(a)(3)
Attorney Docket No. 17546US02 :

This is a decision on the petition under 37 CFR 1.78(a)(3), filed April 15, 2009, to accept an unintentionally delayed claim under 35 U.S.C. §120 for the benefit of priority to the prior-filed nonprovisional application set forth in the concurrently filed amendment.

The petition is **GRANTED**.

A petition for acceptance of a claim for late priority under 37 CFR 1.78(a)(3) is only applicable to those applications filed on or after November 29, 2000. Further, the petition is appropriate only after the expiration of the period specified in 37 CFR 1.78(a)(2)(ii). In addition, the petition under 37 CFR 1.78(a)(3) must be accompanied by:

(1) the reference required by 35 U.S.C. § 120 and 37 CFR 1.78(a)(2)(i) of the prior-filed application, unless previously submitted;
(2) the surcharge set forth in § 1.17(t); and
(3) a statement that the entire delay between the date the claim was due under 37 CFR 1.78(a)(2)(ii) and the date the claim was filed was unintentional. The Director may require additional information where there is a question whether the delay was unintentional.

All of the above requirements having been satisfied, the late claim for priority under 35 U.S.C. § 120 is accepted as being unintentionally delayed.

The granting of the petition to accept the delayed benefit claim to the prior-filed applications under 37 CFR 1.78(a)(3) should not be construed as meaning that this application is entitled to the benefit of the prior-filed applications. In order for this application to be entitled to the benefit of the prior-filed applications, all other requirements under 35 U.S.C. § 120 and 37 CFR 1.78(a)(1) and (a)(2) must be met. Similarly, the fact that the corrected Filing Receipt accompanying this decision on petition includes the prior-filed applications should not be construed as meaning that applicant is entitled to the claim for benefit of priority to the prior-filed applications noted thereon. Accordingly, the examiner will, in due course, consider this

benefit claim and determine whether the application is entitled to the benefit of the earlier filing date.

A corrected Filing Receipt, which includes the priority claim to the prior-filed nonprovisional applications, accompanies this decision on petition.

Any inquiries concerning this decision may be directed to Petitions Attorney Alesia M. Brown at (571) 272-3205. All other inquiries concerning either the examination procedures or status of the application should be directed to the Technology Center.

This application is being forwarded to Technology Center Art Unit 2184 for consideration by the examiner of applicant's entitlement to claim benefit of priority under 35 U.S.C. § 120 to the prior-filed applications.

Anthony Knight
Supervisor
Office of Petitions

ATTACHMENT: Corrected Filing Receipt

UNITED STATES PATENT AND TRADEMARK OFFICE

UNITED STATES DEPARTMENT OF COMMERCE
United States Patent and Trademark Office
Address: COMMISSIONER FOR PATENTS
P.O. Box 1450
Alexandria, Virginia 22313-1450
www.uspto.gov

APPLICATION NUMBER	FILING or 371(c) DATE	GRP ART UNIT	FIL FEE REC'D	ATTY.DOCKET.NO	TOT CLAIMS	IND CLAIMS
11/489,407	07/18/2006	2184	2156	17546US02	20	2

CONFIRMATION NO. 1658

CORRECTED FILING RECEIPT

23446
MCANDREWS HELD & MALLOY, LTD
500 WEST MADISON STREET
SUITE 3400
CHICAGO, IL 60661

Date Mailed: 08/07/2009

Receipt is acknowledged of this non-provisional patent application. The application will be taken up for examination in due course. Applicant will be notified as to the results of the examination. Any correspondence concerning the application must include the following identification information: the U.S. APPLICATION NUMBER, FILING DATE, NAME OF APPLICANT, and TITLE OF INVENTION. Fees transmitted by check or draft are subject to collection. Please verify the accuracy of the data presented on this receipt. **If an error is noted on this Filing Receipt, please submit a written request for a Filing Receipt Correction. Please provide a copy of this Filing Receipt with the changes noted thereon. If you received a "Notice to File Missing Parts" for this application, please submit any corrections to this Filing Receipt with your reply to the Notice. When the USPTO processes the reply to the Notice, the USPTO will generate another Filing Receipt incorporating the requested corrections**

Applicant(s)

Eliezer Aloni, Zur Yigal, ISRAEL;
Uri El Zur, Irvine, CA;
Rafi Shalom, Givat Shmuel, ISRAEL;
Caitlin Bestler, Laguna Hills, CA;

Power of Attorney: The patent practitioners associated with Customer Number 23446

Domestic Priority data as claimed by applicant

This appln claims benefit of 60/796,486 05/01/2006
and is a CIP of 10/643,331 08/19/2003
which claims benefit of 60/404,709 08/19/2002

Foreign Applications

If Required, Foreign Filing License Granted: 08/08/2006

The country code and number of your priority application, to be used for filing abroad under the Paris Convention, is **US 11/489,407**

Projected Publication Date: Not Applicable

Non-Publication Request: No

Early Publication Request: No

Title

Method and system for a user space TCP offload engine (TOE)

Preliminary Class

710

PROTECTING YOUR INVENTION OUTSIDE THE UNITED STATES

Since the rights granted by a U.S. patent extend only throughout the territory of the United States and have no effect in a foreign country, an inventor who wishes patent protection in another country must apply for a patent in a specific country or in regional patent offices. Applicants may wish to consider the filing of an international application under the Patent Cooperation Treaty (PCT). An international (PCT) application generally has the same effect as a regular national patent application in each PCT-member country. The PCT process **simplifies** the filing of patent applications on the same invention in member countries, but **does not result** in a grant of "an international patent" and does not eliminate the need of applicants to file additional documents and fees in countries where patent protection is desired.

Almost every country has its own patent law, and a person desiring a patent in a particular country must make an application for patent in that country in accordance with its particular laws. Since the laws of many countries differ in various respects from the patent law of the United States, applicants are advised to seek guidance from specific foreign countries to ensure that patent rights are not lost prematurely.

Applicants also are advised that in the case of inventions made in the United States, the Director of the USPTO must issue a license before applicants can apply for a patent in a foreign country. The filing of a U.S. patent application serves as a request for a foreign filing license. The application's filing receipt contains further information and guidance as to the status of applicant's license for foreign filing.

Applicants may wish to consult the USPTO booklet, "General Information Concerning Patents" (specifically, the section entitled "Treaties and Foreign Patents") for more information on timeframes and deadlines for filing foreign patent applications. The guide is available either by contacting the USPTO Contact Center at 800-786-9199, or it can be viewed on the USPTO website at http://www.uspto.gov/web/offices/pac/doc/general/index.html.

For information on preventing theft of your intellectual property (patents, trademarks and copyrights), you may wish to consult the U.S. Government website, http://www.stopfakes.gov. Part of a Department of Commerce initiative, this website includes self-help "toolkits" giving innovators guidance on how to protect intellectual property in specific countries such as China, Korea and Mexico. For questions regarding patent enforcement issues, applicants may call the U.S. Government hotline at 1-866-999-HALT (1-866-999-4158).

LICENSE FOR FOREIGN FILING UNDER

Title 35, United States Code, Section 184

Title 37, Code of Federal Regulations, 5.11 & 5.15

GRANTED

The applicant has been granted a license under 35 U.S.C. 184, if the phrase "IF REQUIRED, FOREIGN FILING LICENSE GRANTED" followed by a date appears on this form. Such licenses are issued in all applications where the conditions for issuance of a license have been met, regardless of whether or not a license may be required as

set forth in 37 CFR 5.15. The scope and limitations of this license are set forth in 37 CFR 5.15(a) unless an earlier license has been issued under 37 CFR 5.15(b). The license is subject to revocation upon written notification. The date indicated is the effective date of the license, unless an earlier license of similar scope has been granted under 37 CFR 5.13 or 5.14.

This license is to be retained by the licensee and may be used at any time on or after the effective date thereof unless it is revoked. This license is automatically transferred to any related applications(s) filed under 37 CFR 1.53(d). This license is not retroactive.

The grant of a license does not in any way lessen the responsibility of a licensee for the security of the subject matter as imposed by any Government contract or the provisions of existing laws relating to espionage and the national security or the export of technical data. Licensees should apprise themselves of current regulations especially with respect to certain countries, of other agencies, particularly the Office of Defense Trade Controls, Department of State (with respect to Arms, Munitions and Implements of War (22 CFR 121-128)); the Bureau of Industry and Security, Department of Commerce (15 CFR parts 730-774); the Office of Foreign AssetsControl, Department of Treasury (31 CFR Parts 500+) and the Department of Energy.

NOT GRANTED

No license under 35 U.S.C. 184 has been granted at this time, if the phrase "IF REQUIRED, FOREIGN FILING LICENSE GRANTED" DOES NOT appear on this form. Applicant may still petition for a license under 37 CFR 5.12, if a license is desired before the expiration of 6 months from the filing date of the application. If 6 months has lapsed from the filing date of this application and the licensee has not received any indication of a secrecy order under 35 U.S.C. 181, the licensee may foreign file the application pursuant to 37 CFR 5.15(b).

UNITED STATES PATENT AND TRADEMARK OFFICE

Commissioner for Patents
United States Patent and Trademark Office
P.O. Box 1450
Alexandria, VA 22313-1450
www.uspto.gov

CLEMENTS BERNARD MILLER
1901 ROXBOROUGH ROAD, SUITE 300
CHARLOTTE, NC 28211

MAILED

MAR 0 3 2009

OFFICE OF PETITIONS

In re Application of :
Greg **ROBERTS, et al.** :
Application No. 11/489,412 :
Filed: July 19, 2006 :
Attorney Docket No. 4306 :

DECISION ON PETITION TO WITHDRAW FROM RECORD UNDER 37 CFR 1.36(b)

This is a decision on the Request to Withdraw as attorney or agent of record under 37 C.F.R. § 1.36(b), filed October 22, 2008.

The request is **APPROVED**.

A grantable request to withdraw as attorney/agent of record must be signed by every attorney/agent seeking to withdraw or contain a clear indication that one attorney is signing on behalf of another/others. A request to withdraw will not be approved unless at least 30 (thirty) days would remain between the date of approval and the later of the expiration date of a time to file a response or the expiration date of the maximum time period which can be extended under 37 C.F.R. § 1.136(a).

The request was signed by Lawrence A. Baratta, Jr. on behalf of all attorneys of record. All attorneys/agents associated have been withdrawn. Applicant is reminded that there is no attorney of record at this time.

All future correspondence will be directed to the assignee of the entire interest at the first copied address below until otherwise properly notified by the applicant.

Telephone inquiries concerning this decision should be directed to the undersigned at 571-272-7253.

/Monica A. Graves/
Petitions Examiner, Office of Petitions

cc: **PLAYMOTION, LLC**
100 NORTH POINT CENTER EAST, SUITE 305
ALPHARETTA, GA 30022

cc: **GREG ROBERTS**
125 CADBURY COURT
ALPHARETTA, GA 30022

UNITED STATES PATENT AND TRADEMARK OFFICE

Commissioner for Patents
United States Patent and Trademark Office
P.O. Box 1450
Alexandria, VA 22313-1450
www.uspto.gov

MAILED

AUG 12 2009

OFFICE OF PETITIONS

Greenberg Traurig (HOU)
Intellectual Property Department
1000 Louisiana Street
Suite 1800
Houston, TX 77002

In re Application of :
Neil Anderson et al. :
Application No. 11/489,413 : ON PETITION
Filed: July 19, 2006 :
Attorney Docket No. 104697.000050/US :

This is a decision on the petition under the unintentional provisions of 37 CFR 1.137(b), filed July 2, 2009, to revive the above-identified application.

The petition is **GRANTED**.

The application became abandoned for failure to reply in a timely manner to the Office action under Ex parte Quayle, 1935 Dec. Comm'r Pat. 11 (1935), mailed December 24, 2008, which set a shortened statutory period for reply of two (2) months. No extensions of time under the provisions of 37 CFR 1.136(a) were obtained. Accordingly, the application became abandoned on February 25, 2009.

The petition satisfies the requirements of 37 CFR 1.137(b) in that petitioner has supplied (1) the reply in the form of an amendment, (2) the petition fee of $1,620, and (3) a proper statement of unintentional delay. Accordingly, the amendment is accepted as being unintentionally delayed.

An extension of time under 37 CFR 1.136 must be filed prior to the expiration of the maximum extendable period for reply. *See* In re Application of S., 8 USPQ2d 1630, 1631 (Comm'r Pats. 1988). Since the $1,110 extension of time fee submitted with the petition on July 2, 2009 was subsequent to the maximum extendable period for reply, this fee is unnecessary and will be credited to petitioner's deposit account.

Telephone inquiries concerning this decision should be directed to Kimberly Inabinet at (571) 272-4618.

This application is being referred to Technology Center AU 3671 for appropriate action by the Examiner in the normal course of business on the reply received July 2, 2009.

Carl Friedman
Petitions Examiner
Office of Petitions

UNITED STATES PATENT AND TRADEMARK OFFICE

Commissioner for Patents
United States Patent and Trademark Office
P.O. Box 1450
Alexandria, VA 22313-1450
www.uspto.gov

WEIDE & MILLER, LTD.
7251 W. LAKE MEAD BLVD.
SUITE 530
LAS VEGAS, NV 89128

COPY MAILED

OCT 30 2006

OFFICE OF PETITIONS

In re Application of :
Enriquez, et al. :
Application No. 11/489,418 : ON PETITION
Deposited: July 19, 2006 :
Attorney Docket No. ENRVOL.0001P :
For: SUTURE DISPENSER

This is a decision on the petition, filed July 19, 2006, entitled, "PETITION TO ASSIGN APPLICATION EARLIER FILING DATE." The petition will be treated under 37 CFR 1.10(e).

The petition under 37 CFR 1.10(e) is **dismissed**.

Petitioners contend that the above-identified application was deposited in the United States Postal Service (USPS) Express Mail service on May 10, 2006, but was subsequently lost in transit to the USPTO. Applicants have submitted a copy of the prior filed application and request a May 10, 2006 filing date for the application.

Paragraph (e) of 37 CFR 1.10 states that:

Any person mailing correspondence addressed as set out in 1.1(a) to the Office with sufficient postage utilizing the "Express Mail Post Office to Addressee" service of the USPS, but not received by the Office, may petition the Director to consider such correspondence as filed in the Office on the USPS deposit date, provided that:

(1) The petition is filed promptly after the person becomes aware that the Office has no evidence of receipt of the correspondence;
(2) The number of the "Express Mail" mailing label was placed on the paper(s) or fee(s) that constitute the correspondence prior to the original mailing by "Express Mail";
(3) The petition includes a copy of the originally deposited paper(s) or fee(s) that constitute the correspondence showing the number of the "Express Mail" mailing label thereon, a copy of any returned postcard receipt, a copy of the "Express

Mail" mailing label showing the "date-in," a copy of any other official notation by the USPS relied upon to show the date of deposit, and, if the requested filing date is a date other than the "date-in" on the "Express Mail" mailing label or other official notation entered by the USPS, a showing pursuant to paragraph (d)(3) of this section that the requested filing date was the date the correspondence was deposited in the "Express Mail Post Office to Addressee" service prior to the last scheduled pickup for that day; and

(4) The petition includes a statement which establishes, to the satisfaction of the Director, the original deposit of the correspondence and that the copies of the correspondence, the copy of the "Express Mail" mailing label, the copy of any returned postcard receipt, and any official notation entered by the USPS are true copies of the originally mailed correspondence, original "Express Mail" mailing label, returned postcard receipt, and official notation entered by the USPS.

The petition does not comply with (2) and (3), listed above.

Petitioners have not provided evidence that Express Mail label no. ED849320157US was listed on any of the correspondence allegedly deposited in Express Mail service on May 10, 2006. The transmittal letter filed with present filing lists Express Mail label no. EQ 758620302US.

Petitioners must provide evidence that links the application with Express Mail label no. ED849320157US.

Please a reconsideration petition within two months of the mail date of this decision. No additional fee is required.

The application is being returned to the Office of Initial Patent Examination for further processing.

Further correspondence with respect to this matter should be addressed as follows:

By mail:
Mail Stop PETITION
Commissioner for Patents
Post Office Box 1450
Alexandria, VA 22313-1450

By hand:
U.S. Patent and Trademark Office
Customer Service Window, Mail Stop Petition
Randolph Building
401 Dulany Street
Alexandria, VA 22314

By FAX:
(571) 273-8300 - ATTN: Office of Petitions

Telephone inquiries concerning this matter should be directed to the undersigned at (571) 272-3230.

Shirene Willis Brantley

Shirene Willis Brantley
Senior Petitions Attorney
Office of Petitions

UNITED STATES PATENT AND TRADEMARK OFFICE

Commissioner for Patents
United States Patent and Trademark Office
P.O. Box 1450
Alexandria, VA 22313-1450
www.uspto.gov

WEIDE & MILLER, LTD.
7251 W. LAKE MEAD BLVD.
SUITE 530
LAS VEGAS, NV 89128

COPY MAILED
DEC 0 1 2006
OFFICE OF PETITIONS

In re Application of :
Enriquez, et al. :
Application No. 11/489,418 : ON PETITION
Filed: July 19, 2006 :
Attorney Docket No. ENRVOL.0001P :
For: SUTURE DISPENSER

This is a decision on the reconsideration petition, filed November 13, 2006 (certificate of mailing date November 9, 2006), under 37 CFR 1.10(e).

The petition under 37 CFR 1.10(e) is **granted**.

Petitioners contend that the above-identified application was deposited in the United States Postal Service (USPS) Express Mail service on May 10, 2006, but was subsequently lost in transit to the USPTO. Applicants have submitted a true copy of the prior-filed application and request a May 10, 2006 filing date for the application.

Paragraph (e) of 37 CFR 1.10 states that:

Any person mailing correspondence addressed as set out in 1.1(a) to the Office with sufficient postage utilizing the "Express Mail Post Office to Addressee" service of the USPS, but not received by the Office, may petition the Director to consider such correspondence as filed in the Office on the USPS deposit date, provided that:

(1) The petition is filed promptly after the person becomes aware that the Office has no evidence of receipt of the correspondence;
(2) The number of the "Express Mail" mailing label was placed on the paper(s) or fee(s) that constitute the correspondence prior to the original mailing by "Express Mail";
(3) The petition includes a copy of the originally deposited paper(s) or fee(s) that constitute the correspondence showing the number of the "Express Mail" mailing label thereon, a copy of any returned postcard receipt, a copy of the "Express

Mail" mailing label showing the "date-in," a copy of any other official notation by the USPS relied upon to show the date of deposit, and, if the requested filing date is a date other than the "date-in" on the "Express Mail" mailing label or other official notation entered by the USPS, a showing pursuant to paragraph (d)(3) of this section that the requested filing date was the date the correspondence was deposited in the "Express Mail Post Office to Addressee" service prior to the last scheduled pickup for that day; and

(4) The petition includes a statement which establishes, to the satisfaction of the Director, the original deposit of the correspondence and that the copies of the correspondence, the copy of the "Express Mail" mailing label, the copy of any returned postcard receipt, and any official notation entered by the USPS are true copies of the originally mailed correspondence, original "Express Mail" mailing label, returned postcard receipt, and official notation entered by the USPS.

Express Mail label no. ED849320157US is listed on the copy of transmittal letter and copy of the cover page of the application. The Office considers the date the paper or fee is shown to have been deposited as "Express Mail" to be the "Date In" on the Express Mail label, MPEP 513. That is the date that verifies that the package was actually mailed. In view of the above, the evidence is convincing that the application was deposited as "Express Mail" with the US Postal Service on May 10, 2006.

Accordingly, the petition is granted. No fee has been or will be filed in connection with this petition.

The application is being forwarded to the Office of Initial Patent Examination for further processing with a filing date of **May 10, 2006** and the mailing of a corrected filing receipt.

Thereafter, the application will be forwarded to Technology Center A.U. 3728 or examination in due course.

Telephone inquiries concerning this matter should be directed to the undersigned at (571) 272-3230.

Shirene Willis Brantley
Senior Petitions Attorney
Office of Petitions

UNITED STATES PATENT AND TRADEMARK OFFICE

UNITED STATES DEPARTMENT OF COMMERCE
United States Patent and Trademark Office
Address: COMMISSIONER FOR PATENTS
P.O. Box 1450
Alexandria, Virginia 22313-1450
www.uspto.gov

VAN PELT, YI & JAMES LLP AND APPLE COMPUTER, INC.
10050 N. FOOTHILL BOULEVARD
SUITE 200
CUPERTINO, CA 95014

Mail Date: 04/21/2010

Applicant	: Paul Marcos	: DECISION ON REQUEST FOR
Patent Number	: 7584430	: RECALCULATION of PATENT
Issue Date	: 09/01/2009	: TERM ADJUSTMENT IN VIEW
Appliction No	: 11/489,422	: OF WYETH AND NOTICE OF INTENT TO
Filed	: 07/18/2006	: ISSUE CERTIFICATE OF CORRECTION
		:

The Request for Recalculation is **GRANTED** to the extent indicated.

The patent term adjustment has been determined to be **488** days. The USPTO will *sua sponte* issue a certificate of correction reflecting the amount of PTA days determined by the recalculation.

Prior to the issuance of the certificate of correction, the USPTO will afford patentee an opportunity to be heard and request reconsideration. Accordingly, patentee has **one month or thirty (30) days**, whichever is longer, to file a request for reconsideration of this patent term adjustment calculation. See 35 U.S.C. 154(b)(3)(B)(ii) and 37 CFR 1.322(a)(4). No extensions of time will be granted under 37 CFR 1.136.

Patentee should use document code PET.OP if electronically filing a request for reconsideration of this patent term adjustment calculation. The patentee must also include the information required by 37 CFR 1.705(b)(2) and the fee required by 37 CFR 1.18(e). If patentee does not file a timely request for reconsideration of this patent term adjustment calculation including the information required by 37 CFR 1.705(b)(2) and the fee required by 37 CFR 1.18(e), the USPTO will issue a certificate of correction reflecting the PTA determination noted above.

Patentee should be aware that in order to preserve the right to review in the United States District Court for the District of Columbia of the USPTO patent term adjustment determination, patentee must ensure that he or she also take the steps required under 35 U.S.C. 154(b)(4)(A) in a timely manner. Nothing in the request for recalculation should be construed as providing an alternative time frame for commencing a civil action under 35 U.S.C. 154(b)(4)(A).

Any questions concerning this decision should be directed to the Office of Patent Legal Administration at 571-272-7702.

UNITED STATES PATENT AND TRADEMARK OFFICE

UNITED STATES DEPARTMENT OF COMMERCE
United States Patent and Trademark Office
Address: COMMISSIONER FOR PATENTS
P.O. Box 1450
Alexandria, Virginia 22313-1450
www.uspto.gov

APPLICATION NO.	FILING DATE	FIRST NAMED INVENTOR	ATTORNEY DOCKET NO.	CONFIRMATION NO.
11/489,434	07/20/2006	Ram Krishna Ghildiyal	200406094-2	4315

7590 04/14/2008

HEWLETT PACKARD COMPANY
P O BOX 272400, 3404 E. HARMONY ROAD
INTELLECTUAL PROPERTY ADMINISTRATION
FORT COLLINS, CO 80527-2400

EXAMINER	
NAMAZI, MEHDI	

ART UNIT	PAPER NUMBER
2189	

NOTIFICATION DATE	DELIVERY MODE
04/14/2008	ELECTRONIC

DECISION GRANTING PETITION UNDER 37 CFR 1.138(d)

The declaration of express abandonment is recognized

This is in response to the petition under 37 CFR 1.138(d), requesting for a refund of any previously paid search fee and excess claims fee in the above-identified application.

The petition is granted.

The express abandonment is recognized. Any previously paid search fee and excess claims fee are hereby refunded.

Telephone inquiries should be directed to the Office of Data Management at (571) 272-4200.

Patent Publication Branch
Office of Data Management

Adjustment date: 04/15/2008 DTERRY
02/21/2006 STEUMEL1 00000034 082025
02 FC:1111 500.00 CR 11489434

UNITED STATES PATENT AND TRADEMARK OFFICE

UNITED STATES DEPARTMENT OF COMMERCE
United States Patent and Trademark Office
Address: COMMISSIONER FOR PATENTS
P.O. Box 1450
Alexandria, Virginia 22313-1450
www.uspto.gov

WHIRLPOOL PATENTS COMPANY - MD 0750
500 RENAISSANCE DRIVE - SUITE 102
ST. JOSEPH, MI 49085

Mail Date: 04/21/2010

Applicant	: Michael Scot Carden	: DECISION ON REQUEST FOR
Patent Number	: 7628461	: RECALCULATION of PATENT
Issue Date	: 12/08/2009	: TERM ADJUSTMENT IN VIEW
Appliction No	: 11/489,450	: OF WYETH AND NOTICE OF INTENT TO
Filed	: 07/20/2006	: ISSUE CERTIFICATE OF CORRECTION
		:

The Request for Recalculation is **GRANTED** to the extent indicated.

The patent term adjustment has been determined to be **490** days. The USPTO will *sua sponte* issue a certificate of correction reflecting the amount of PTA days determined by the recalculation.

Prior to the issuance of the certificate of correction, the USPTO will afford patentee an opportunity to be heard and request reconsideration. Accordingly, patentee has **one month or thirty (30) days,** whichever is longer, to file a request for reconsideration of this patent term adjustment calculation. See 35 U.S.C. 154(b)(3)(B)(ii) and 37 CFR 1.322(a)(4). No extensions of time will be granted under 37 CFR 1.136.

Patentee should use document code PET.OP if electronically filing a request for reconsideration of this patent term adjustment calculation. The patentee must also include the information required by 37 CFR 1.705(b)(2) and the fee required by 37 CFR 1.18(e). If patentee does not file a timely request for reconsideration of this patent term adjustment calculation including the information required by 37 CFR 1.705(b)(2) and the fee required by 37 CFR 1.18(e), the USPTO will issue a certificate of correction reflecting the PTA determination noted above.

Patentee should be aware that in order to preserve the right to review in the United States District Court for the District of Columbia of the USPTO patent term adjustment determination, patentee must ensure that he or she also take the steps required under 35 U.S.C. 154(b)(4)(A) in a timely manner. Nothing in the request for recalculation should be construed as providing an alternative time frame for commencing a civil action under 35 U.S.C. 154(b)(4)(A).

Any questions concerning this decision should be directed to the Office of Patent Legal Administration at 571-272-7702.

UNITED STATES PATENT AND TRADEMARK OFFICE

COMMISSIONER FOR PATENTS
UNITED STATES PATENT AND TRADEMARK OFFICE
P.O. BOX 1450
ALEXANDRIA, VA 22313-1450
www.uspto.gov

Paper No.

SUGHRUE MION, PLLC
2100 PENNSYLVANIA AVENUE,
N.W.
SUITE 800
WASHINGTON DC 20037

COPY MAILED
DEC 11 2006
OFFICE OF PETITIONS

In re Application of :
Kim et al. : DECISION ON PETITION
Application No. 11/489,459 :
Filed: July 20, 2006 :
Attorney Docket No. Q95216 :

This is a decision on the RESPONSE TO NOTICE TO FILE CORRECTED APPLICATION PAPERS AND PETITION filed September 18, 2006, which is properly considered as a petition under § 1.53(e)(2). Petitioner requests that the requirement regarding omitted items included in the Notice to File Corrected Application Papers mailed August 16, 2006 be withdrawn, and that a confirmation that all forty-three pages (including pages 38 and 39) of the specification were filed and received by the USPTO on July 20, 2006 be provided. In effect, petitioner requests that the Office accord the above-identified application a filing date of July 20, 2006, with pages 38 and 39 of the specification considered part of the original application disclosure.

Application papers in the above-identified application were deposited on July 20, 2006. However, on August 16, 2006, the Initial Patent Examination Division mailed applicants a NOTICE TO FILE CORRECTED APPLICATION PAPERS. Applicants were thereby notified *inter alia* that the application papers had been accorded a filing date; however, pages 38 and 39 of the specification appeared to have been omitted from the application.

In response, applicants filed the instant petition (and petition fee). Applicants maintain that forty-three (43) pages of the specification, including purportedly missing pages 38 and 39, were actually submitted and acknowledged as received by the USPTO on July 20, 2006. In support thereof, applicants submitted a copy of their return postcard from the USPTO. The petition also includes a copy of pages 38 and 39, as submitted on July 20, 2006.

A postcard receipt, which itemizes and properly identifies the items, which are being filed, serves as prima facie evidence of receipt in the Office of all items listed thereon on the date stamped thereon by the Office. See MPEP 503. A review of petitioners' postcard receipt reveals that: 1) it was date stamped as received in the USPTO on July 20, 2006, 2) it specifically identifies the items being filed, including "Spec/Abst 43/1" and 3) it lacks any annotation of non-receipt of any item denoted on the postcard. Thus, petitioners have shown that the items denoted, including 44 pages of specification and abstract, were filed on July 20, 2006.

The application papers already considered received in the Office on July 20, 2006, were reviewed along with pages 38 and 39 of the specification submitted on petition. These papers together constitute the items described on the postcard receipt as "Spec/Abst 43/1." It is concluded that petitioner has shown that pages 38 and 39 were among the items present in the application on the date of deposit and should be included in the original application disclosure.

Accordingly, the petition is **GRANTED**.

Given the basis for granting the petition, petitioner's request to refund the petition fee is granted. The petition fee is being refunded to Deposit Account No. 19-4880, as authorized.

The application is being forwarded to the Office of Initial Patent Examination (OIPE) for:

· further processing with a filing date of July 20, 2006 using the application papers received in the Office and presently accorded that date; and pages 38 and 39 of the specification re-supplied on petition filed September 18, 2006; and

· for indication in Office records, as appropriate, that pages 38 and 39 of the specification were present in the application on filing.

Applicants will receive appropriate notifications regarding the fees owed, if any, and other information in due course from OIPE.

Telephone inquiries related to this decision should be directed to the undersigned at 571-272-3219.

Nancy Johnson
Senior Petitions Attorney
Office of Petitions

SPE RESPONSE FOR CERTIFICATE OF CORRECTION

Paper No.: _____

DATE : 12/02/09

TO SPE OF : ART UNIT 2165

SUBJECT : Request for Certificate of Correction for Appl. No.: 11489463 Patent No.: 7593937

Please respond to this request for a certificate of correction within 7 days.

FOR IFW FILES:

Please review the requested changes/corrections as shown in the **COCIN** document(s) in the IFW application image. No new matter should be introduced, nor should the scope or meaning of the claims be changed.

Please complete the response (see below) and forward the completed response to scanning using document code **COCX**.

FOR PAPER FILES:

Please review the requested changes/corrections as shown in the attached certificate of correction. Please complete this form (see below) and forward it with the file to:

Certificates of Correction Branch (C of C)
Randolph Square 9D40-D
Palm Location 7580
You can fax the Directors/SPE response to 571-270-9990

Lamonte Newsome
Certificates of Correction Branch
703-756-1574

Thank You For Your Assistance

The request for issuing the above-identified correction(s) is hereby:
Note your decision on the appropriate box.

X **Approved**	**All** changes apply.
☐ **Approved in Part**	Specify below which changes **do not** apply.
☐ **Denied**	State the reasons for denial below.

Comments: _____

_____

_____

_____

_____

_____ 12/3/09

Formatted: Indent: Left: 1.22"

SPE 2165

UNITED STATES PATENT AND TRADEMARK OFFICE

UNITED STATES DEPARTMENT OF COMMERCE
United States Patent and Trademark Office
Address: COMMISSIONER FOR PATENTS
P.O. Box 1450
Alexandria, Virginia 22313-1450
www.uspto.gov

WENDEROTH, LIND & PONACK, L.L.P.
1030 15th Street, N.W.,
Suite 400 East
Washington, DC 20005-1503

Mail Date: 04/20/2010

Applicant	: Takao Furukawa	: DECISION ON REQUEST FOR
Patent Number	: 7637702	: RECALCULATION of PATENT
Issue Date	: 12/29/2009	: TERM ADJUSTMENT IN VIEW
Appliction No	: 11/489,491	: OF WYETH AND NOTICE OF INTENT TO
Filed	: 07/20/2006	: ISSUE CERTIFICATE OF CORRECTION
		:

The Request for Recalculation is **GRANTED** to the extent indicated.

The patent term adjustment has been determined to be **777** days. The USPTO will *sua sponte* issue a certificate of correction reflecting the amount of PTA days determined by the recalculation.

Prior to the issuance of the certificate of correction, the USPTO will afford patentee an opportunity to be heard and request reconsideration. Accordingly, patentee has **one month or thirty (30) days**, whichever is longer, to file a request for reconsideration of this patent term adjustment calculation. See 35 U.S.C. 154(b)(3)(B)(ii) and 37 CFR 1.322(a)(4). No extensions of time will be granted under 37 CFR 1.136.

Patentee should use document code PET.OP if electronically filing a request for reconsideration of this patent term adjustment calculation. The patentee must also include the information required by 37 CFR 1.705(b)(2) and the fee required by 37 CFR 1.18(e). If patentee does not file a timely request for reconsideration of this patent term adjustment calculation including the information required by 37 CFR 1.705(b)(2) and the fee required by 37 CFR 1.18(e), the USPTO will issue a certificate of correction reflecting the PTA determination noted above.

Patentee should be aware that in order to preserve the right to review in the United States District Court for the District of Columbia of the USPTO patent term adjustment determination, patentee must ensure that he or she also take the steps required under 35 U.S.C. 154(b)(4)(A) in a timely manner. Nothing in the request for recalculation should be construed as providing an alternative time frame for commencing a civil action under 35 U.S.C. 154(b)(4)(A).

Any questions concerning this decision should be directed to the Office of Patent Legal Administration at 571-272-7702.

UNITED STATES PATENT AND TRADEMARK OFFICE

UNITED STATES DEPARTMENT OF COMMERCE
United States Patent and Trademark Office
Address: COMMISSIONER FOR PATENTS
P.O. Box 1450
Alexandria, Virginia 22313-1450
www.uspto.gov

ROYLANCE, ABRAMS, BERDO & GOODMAN, L.L.P.
1300 19TH STREET, N.W.
SUITE 600
WASHINGTON,, DC 20036

Mail Date: 05/21/2010

Applicant	: Moon-bae Park	: DECISION ON REQUEST FOR
Patent Number	: 7664443	: RECALCULATION of PATENT
Issue Date	: 02/16/2010	: TERM ADJUSTMENT IN VIEW
Application No	: 11/489,516	: OF WYETH AND NOTICE OF INTENT TO
Filed	: 07/20/2006	: ISSUE CERTIFICATE OF CORRECTION
		:

The Request for Recalculation is **GRANTED** to the extent indicated.

The patent term adjustment has been determined to be **756** days. The USPTO will *sua sponte* issue a certificate of correction reflecting the amount of PTA days determined by the recalculation.

Prior to the issuance of the certificate of correction, the USPTO will afford patentee an opportunity to be heard and request reconsideration. Accordingly, patentee has **one month or thirty (30) days**, whichever is longer, to file a request for reconsideration of this patent term adjustment calculation. See 35 U.S.C. 154(b)(3)(B)(ii) and 37 CFR 1.322(a)(4). No extensions of time will be granted under 37 CFR 1.136.

Patentee should use document code PET.OP if electronically filing a request for reconsideration of this patent term adjustment calculation. The patentee must also include the information required by 37 CFR 1.705(b)(2) and the fee required by 37 CFR 1.18(e). If patentee does not file a timely request for reconsideration of this patent term adjustment calculation including the information required by 37 CFR 1.705(b)(2) and the fee required by 37 CFR 1.18(e), the USPTO will issue a certificate of correction reflecting the PTA determination noted above.

Patentee should be aware that in order to preserve the right to review in the United States District Court for the District of Columbia of the USPTO patent term adjustment determination, patentee must ensure that he or she also take the steps required under 35 U.S.C. 154(b)(4)(A) in a timely manner. Nothing in the request for recalculation should be construed as providing an alternative time frame for commencing a civil action under 35 U.S.C. 154(b)(4)(A).

Any questions concerning this decision should be directed to the Office of Patent Legal Administration at 571-272-7702.

UNITED STATES PATENT AND TRADEMARK OFFICE

UNITED STATES DEPARTMENT OF COMMERCE
United States Patent and Trademark Office
Address: COMMISSIONER FOR PATENTS
P.O. Box 1450
Alexandria, Virginia 22313-1450
www.uspto.gov

APPLICATION NO.	FILING DATE	FIRST NAMED INVENTOR	ATTORNEY DOCKET NO.	CONFIRMATION NO.
11/489,520	07/20/2006	Hiromu Yoshii	7051192001	1535

7590 12/07/2007

BINGHAM MCCUTCHEN LLP
2020 K Street, N.W.
Intellectual Property Department
WASHINGTON, DC 20006

EXAMINER	
PATEL, JAYANTI K	

ART UNIT	PAPER NUMBER
2619	

MAIL DATE	DELIVERY MODE
12/07/2007	PAPER

DECISION GRANTING PETITION UNDER 37 CFR 1.138(d)

The declaration of express abandonment is recognized

This is in response to the petition under 37 CFR 1.138(d), requesting for a refund of any previously paid search fee and excess claims fee in the above-identified application.

The petition is granted.

The express abandonment is recognized. Any previously paid search fee and excess claims fee are hereby refunded.

Telephone inquiries should be directed to the Office of Data Management at (571) 272-4200.

Patent Publication Branch
Office of Data Management

04 FC:1201 1200.00 CR

02 FC:1111 500.00 CR

UNITED STATES PATENT AND TRADEMARK OFFICE

UNITED STATES DEPARTMENT OF COMMERCE
United States Patent and Trademark Office
Address: COMMISSIONER FOR PATENTS
P.O. Box 1450
Alexandria, Virginia 22313-1450
www.uspto.gov

STERNE, KESSLER, GOLDSTEIN & FOX P.L.L.C.
1100 NEW YORK AVENUE, N.W.
WASHINGTON, DC 20005

Mail Date: 04/21/2010

Applicant	: Bruce J. Currivan	: DECISION ON REQUEST FOR
Patent Number	: 7626996	: RECALCULATION of PATENT
Issue Date	: 12/01/2009	: TERM ADJUSTMENT IN VIEW
Appliction No	: 11/489,525	: OF WYETH AND NOTICE OF INTENT TO
Filed	: 07/20/2006	: ISSUE CERTIFICATE OF CORRECTION
		:

The Request for Recalculation is **GRANTED** to the extent indicated.

The patent term adjustment has been determined to be **525** days. The USPTO will *sua sponte* issue a certificate of correction reflecting the amount of PTA days determined by the recalculation.

Prior to the issuance of the certificate of correction, the USPTO will afford patentee an opportunity to be heard and request reconsideration. Accordingly, patentee has **one month or thirty (30) days**, whichever is longer, to file a request for reconsideration of this patent term adjustment calculation. See 35 U.S.C. 154(b)(3)(B)(ii) and 37 CFR 1.322(a)(4). No extensions of time will be granted under 37 CFR 1.136.

Patentee should use document code PET.OP if electronically filing a request for reconsideration of this patent term adjustment calculation. The patentee must also include the information required by 37 CFR 1.705(b)(2) and the fee required by 37 CFR 1.18(e). If patentee does not file a timely request for reconsideration of this patent term adjustment calculation including the information required by 37 CFR 1.705(b)(2) and the fee required by 37 CFR 1.18(e), the USPTO will issue a certificate of correction reflecting the PTA determination noted above.

Patentee should be aware that in order to preserve the right to review in the United States District Court for the District of Columbia of the USPTO patent term adjustment determination, patentee must ensure that he or she also take the steps required under 35 U.S.C. 154(b)(4)(A) in a timely manner. Nothing in the request for recalculation should be construed as providing an alternative time frame for commencing a civil action under 35 U.S.C. 154(b)(4)(A).

Any questions concerning this decision should be directed to the Office of Patent Legal Administration at 571-272-7702.

UNITED STATES PATENT AND TRADEMARK OFFICE

UNITED STATES DEPARTMENT OF COMMERCE
United States Patent and Trademark Office
Address: COMMISSIONER FOR PATENTS
P.O. Box 1450
Alexandria, Virginia 22313-1450
www.uspto.gov

STERNE, KESSLER, GOLDSTEIN & FOX P.L.L.C.
1100 NEW YORK AVENUE, N.W.
WASHINGTON, DC 20005

Mail Date: 05/18/2010

Applicant : Bruce J. Currivan
Patent Number : 7626996
Issue Date : 12/01/2009
Application No: 11/489,525
Filed : 07/20/2006

: NOTICE CONCERNING IMPROPER
: CALCULATION OF PATENT TERM
: ADJUSTMENT BASED UPON USPTO
: IMPROPERLY MEASURING REDUCTION
: PERIOD UNDER 37 CFR 1.704(c)(10).

The United States Patent and Trademark Office (USPTO) discovered that in processing the recent recalculation decisions mailed in response to patentee's filed Request for Recalculation of Patent Term Adjustment in view of Wyeth, the USPTO improperly measured the reduction period for reductions under 37 CFR 1.704(c)(10). Pursuant to 37 CFR 1.704(c)(10), patentee's reduction begins on the date of filing the amendment under 37 CFR 1.312 ("1.312 amendment") or other related paper and ends on the date that the Office mails a response to the filing of the 1.312 amendment or other paper. It has been discovered that during the recalculation, the calculation failed to the limit the reduction to the mail date of the response to the 1.312 amendment or other paper. Accordingly, patentee's reductions were greater than warranted.

This notice **VACATES** the previous GRANTED request for recalculation and provides patentee with a revised GRANTED recalculation.

The patent term adjustment has been determined to be **580** days. The USPTO will *sua sponte* issue a certificate of correction reflecting the amount of patent term adjustment (PTA) days determined by the recalculation.

Prior to the issuance of the certificate of correction, the USPTO will afford patentee an opportunity to be heard and request reconsideration. Accordingly, patentee has **one month or thirty (30) days** from the mail date of this notice, whichever is longer, to file a request for reconsideration of this PTA calculation. See 35 U.S.C. § 154(b)(3)(B)(ii) and 37 CFR 1.322(a)(4).

Patentee should use document code PET.OP if electronically filing a request for reconsideration of this PTA calculation. The patentee must also include the information required by 37 CFR 1.705(b)(2), and the fee required by 37 CFR 1.18(e). If patentee does not file a timely request for reconsideration of this PTA calculation, including the information required by 37 CFR 1.705(b)(2) and the fee required by 37 CFR 1.18(e), the USPTO will issue a certificate of correction reflecting the PTA determination noted above.

Patentee should be aware that in order to preserve the right of review of the USPTO's PTA determination in the United States District Court for the District of Columbia, patentee must ensure that the steps required under 35 U.S.C. § 154 (b)(4) are taken in a timely manner. Nothing in the request for recalculation should be construed as providing an alternative time frame for commencing a civil action under 35 U.S.C. § 154(b)(4).

UNITED STATES PATENT AND TRADEMARK OFFICE

UNITED STATES DEPARTMENT OF COMMERCE
United States Patent and Trademark Office
Address: COMMISSIONER FOR PATENTS
P.O. Box 1450
Alexandria, Virginia 22313-1450
www.uspto.gov

APPLICATION NO.	FILING DATE	FIRST NAMED INVENTOR	ATTORNEY DOCKET NO.	CONFIRMATION NO.
11/489,530	07/20/2006	Sang-Hoon Yim	301/039	9916

7590 11/04/2009

LEE & MORSE, P.C.
3141 FAIRVIEW PARK DRIVE
SUITE 500
FALLS CHURCH, VA 22042

EXAMINER	
KUMAR, SRILAKSHMI K	

ART UNIT	PAPER NUMBER
2629	

MAIL DATE	DELIVERY MODE
11/04/2009	PAPER

DECISION GRANTING PETITION UNDER 37 CFR 1.138(d)

The declaration of express abandonment is recognized

This is in response to the petition under 37 CFR 1.138(d), requesting for a refund of any previously paid search fee and excess claims fee in the above-identified application.

The petition is granted.

The express abandonment is recognized. Any previously paid search fee and excess claims fee are hereby refunded.

Telephone inquiries should be directed to the Office of Data Management at (571) 272-4200.

Betty Powell

Patent Publication Branch
Office of Data Management

UNITED STATES PATENT AND TRADEMARK OFFICE

UNITED STATES DEPARTMENT OF COMMERCE
United States Patent and Trademark Office
Address: COMMISSIONER FOR PATENTS
P.O. Box 1450
Alexandria, Virginia 22313-1450
www.uspto.gov

STEIN MCEWEN, LLP
1400 EYE STREET, NW
SUITE 300
WASHINGTON, DC 20005

Mail Date: 04/20/2010

Applicant	: Jinhee Kim	: DECISION ON REQUEST FOR
Patent Number	: 7659036	: RECALCULATION of PATENT
Issue Date	: 02/09/2010	: TERM ADJUSTMENT IN VIEW
Appliction No	: 11/489,536	: OF WYETH AND NOTICE OF INTENT TO
Filed	: 07/20/2006	: ISSUE CERTIFICATE OF CORRECTION
		:

The Request for Recalculation is **GRANTED** to the extent indicated.

The patent term adjustment has been determined to be **147** days. The USPTO will *sua sponte* issue a certificate of correction reflecting the amount of PTA days determined by the recalculation.

Prior to the issuance of the certificate of correction, the USPTO will afford patentee an opportunity to be heard and request reconsideration. Accordingly, patentee has **one month or thirty (30) days**, whichever is longer, to file a request for reconsideration of this patent term adjustment calculation. See 35 U.S.C. 154(b)(3)(B)(ii) and 37 CFR 1.322(a)(4). No extensions of time will be granted under 37 CFR 1.136.

Patentee should use document code PET.OP if electronically filing a request for reconsideration of this patent term adjustment calculation. The patentee must also include the information required by 37 CFR 1.705(b)(2) and the fee required by 37 CFR 1.18(e). If patentee does not file a timely request for reconsideration of this patent term adjustment calculation including the information required by 37 CFR 1.705(b)(2) and the fee required by 37 CFR 1.18(e), the USPTO will issue a certificate of correction reflecting the PTA determination noted above.

Patentee should be aware that in order to preserve the right to review in the United States District Court for the District of Columbia of the USPTO patent term adjustment determination, patentee must ensure that he or she also take the steps required under 35 U.S.C. 154(b)(4)(A) in a timely manner. Nothing in the request for recalculation should be construed as providing an alternative time frame for commencing a civil action under 35 U.S.C. 154(b)(4)(A).

Any questions concerning this decision should be directed to the Office of Patent Legal Administration at 571-272-7702.

UNITED STATES PATENT AND TRADEMARK OFFICE

UNITED STATES DEPARTMENT OF COMMERCE
United States Patent and Trademark Office
Address: COMMISSIONER FOR PATENTS
P.O. Box 1450
Alexandria, Virginia 22313-1450
www.uspto.gov

APPLICATION NO.	FILING DATE	FIRST NAMED INVENTOR	ATTORNEY DOCKET NO.	CONFIRMATION NO.
11/489,548	07/20/2006	Seong-geun Park	0006.1022	9570

7590 09/05/2008

STEIN, MCEWEN & BUI, LLP
1400 EYE STREET, NW
SUITE 300
WASHINGTON, DC 20005

EXAMINER	
MAUNG, NAY AUNG	

ART UNIT	PAPER NUMBER
2618	

MAIL DATE	DELIVERY MODE
09/05/2008	PAPER

DECISION GRANTING PETITION UNDER 37 CFR 1.138(d)

The declaration of express abandonment is recognized

This is in response to the petition under 37 CFR 1.138(d), requesting for a refund of any previously paid search fee and excess claims fee in the above-identified application.

The petition is granted.

The express abandonment is recognized. Any previously paid search fee and excess claims fee are hereby refunded.

Telephone inquiries should be directed to the Office of Data Management at (571) 272-4200.

Betty Powell

Patent Publication Branch
Office of Data Management

```
Adjustment date: 09/08/2008  BPOWELL
07/21/2006 STEUMEL1 00000043 11489548
02 FC:1111                    -500.00 OP
04 FC:1202                    -650.00 OP
05 FC:1201                    -400.00 OP
```

```
Repln. Ref: 09/08/2008 BPOWELL  0019213000
DA#:502470   Name/Number:11372951
FC: 9204                      $900.00 CR
```

UNITED STATES PATENT AND TRADEMARK OFFICE

UNITED STATES DEPARTMENT OF COMMERCE
United States Patent and Trademark Office
Address: COMMISSIONER FOR PATENTS
P.O. Box 1450
Alexandria, Virginia 22313-1450
www.uspto.gov

WHIRLPOOL PATENTS COMPANY - MD 0750
500 RENAISSANCE DRIVE - SUITE 102
ST. JOSEPH, MI 49085

Mail Date: 04/21/2010

Applicant	: William James Vestal	: DECISION ON REQUEST FOR
Patent Number	: 7600388	: RECALCULATION of PATENT
Issue Date	: 10/13/2009	: TERM ADJUSTMENT IN VIEW
Appliction No	: 11/489,561	: OF WYETH AND NOTICE OF INTENT TO
Filed	: 07/20/2006	: ISSUE CERTIFICATE OF CORRECTION
		:

The Request for Recalculation is **GRANTED** to the extent indicated.

The patent term adjustment has been determined to be **467** days. The USPTO will *sua sponte* issue a certificate of correction reflecting the amount of PTA days determined by the recalculation.

Prior to the issuance of the certificate of correction, the USPTO will afford patentee an opportunity to be heard and request reconsideration. Accordingly, patentee has **one month or thirty (30) days**, whichever is longer, to file a request for reconsideration of this patent term adjustment calculation. See 35 U.S.C. 154(b)(3)(B)(ii) and 37 CFR 1.322(a)(4). No extensions of time will be granted under 37 CFR 1.136.

Patentee should use document code PET.OP if electronically filing a request for reconsideration of this patent term adjustment calculation. The patentee must also include the information required by 37 CFR 1.705(b)(2) and the fee required by 37 CFR 1.18(e). If patentee does not file a timely request for reconsideration of this patent term adjustment calculation including the information required by 37 CFR 1.705(b)(2) and the fee required by 37 CFR 1.18(e), the USPTO will issue a certificate of correction reflecting the PTA determination noted above.

Patentee should be aware that in order to preserve the right to review in the United States District Court for the District of Columbia of the USPTO patent term adjustment determination, patentee must ensure that he or she also take the steps required under 35 U.S.C. 154(b)(4)(A) in a timely manner. Nothing in the request for recalculation should be construed as providing an alternative time frame for commencing a civil action under 35 U.S.C. 154(b)(4)(A).

Any questions concerning this decision should be directed to the Office of Patent Legal Administration at 571-272-7702.

UNITED STATES PATENT AND TRADEMARK OFFICE

UNITED STATES DEPARTMENT OF COMMERCE
United States Patent and Trademark Office
Address: COMMISSIONER FOR PATENTS
P.O. Box 1450
Alexandria, Virginia 22313-1450
www.uspto.gov

Juan Carlos A. Marquez
c/o Stites & Harbison PLLC
1199 North Fairfax Street
Suite 900
Alexandria, VA 22314-1437

Mail Date: 04/21/2010

Applicant	: Kazuo Takahashi	: DECISION ON REQUEST FOR
Patent Number	: 7654306	: RECALCULATION of PATENT
Issue Date	: 02/02/2010	: TERM ADJUSTMENT IN VIEW
Appliction No	: 11/489,571	: OF WYETH AND NOTICE OF INTENT TO
Filed	: 07/20/2006	: ISSUE CERTIFICATE OF CORRECTION
		:

The Request for Recalculation is **GRANTED** to the extent indicated.

The patent term adjustment has been determined to be **284** days. The USPTO will *sua sponte* issue a certificate of correction reflecting the amount of PTA days determined by the recalculation.

Prior to the issuance of the certificate of correction, the USPTO will afford patentee an opportunity to be heard and request reconsideration. Accordingly, patentee has **one month or thirty (30) days**, whichever is longer, to file a request for reconsideration of this patent term adjustment calculation. See 35 U.S.C. 154(b)(3)(B)(ii) and 37 CFR 1.322(a)(4). No extensions of time will be granted under 37 CFR 1.136.

Patentee should use document code PET.OP if electronically filing a request for reconsideration of this patent term adjustment calculation. The patentee must also include the information required by 37 CFR 1.705(b)(2) and the fee required by 37 CFR 1.18(e). If patentee does not file a timely request for reconsideration of this patent term adjustment calculation including the information required by 37 CFR 1.705(b)(2) and the fee required by 37 CFR 1.18(e), the USPTO will issue a certificate of correction reflecting the PTA determination noted above.

Patentee should be aware that in order to preserve the right to review in the United States District Court for the District of Columbia of the USPTO patent term adjustment determination, patentee must ensure that he or she also take the steps required under 35 U.S.C. 154(b)(4)(A) in a timely manner. Nothing in the request for recalculation should be construed as providing an alternative time frame for commencing a civil action under 35 U.S.C. 154(b)(4)(A).

Any questions concerning this decision should be directed to the Office of Patent Legal Administration at 571-272-7702.

UNITED STATES PATENT AND TRADEMARK OFFICE

Commissioner for Patents
United States Patent and Trademark Office
P.O. Box 1450
Alexandria, VA 22313-1450
www.uspto.gov

HERSHKOVITZ & ASSOCIATES
2845 DUKE STREET
ALEXANDRIA VA 22314

COPY MAILED

NOV 0 9 2006

OFFICE OF PETITIONS

In re Application of :

COMAN :
Application No. 11/489,574 : DECISION ON PETITION
Filed: July 20, 2006 : TO MAKE SPECIAL UNDER
Attorney Docket No. P38238CIP : 37 CFR 1.102(c)(1)
:

This is a decision on the petition under 37 CFR 1.102(c)(1), filed October 19, 2006, to make the above-identified application special based on applicant's age as set forth in M.P.E.P. § 708.02, Section IV.

The petition is **DISMISSED**.

A grantable petition to make an application special under 37 CFR 1.102(c)(1) and MPEP § 708.02, Section IV: Applicant's Age, must be accompanied by evidence showing that at least one of the applicants is 65 years of age, or more, such as a birth certificate or a statement by applicant. No fee is required.

The instant petition does not include the statement/affidavit from inventor attesting to his age.

Further correspondence with respect to this matter should be addressed as follows:

By Mail: Mail Stop PETITION
Commissioner for Patents
P. O. Box 1450
Alexandria, VA 22313-1450

By hand: U. S. Patent and Trademark Office
Customer Service Window, Mail Stop Petitions
Randolph Building
401 Dulany Street
Alexandria, VA 22314

By FAX: (571) 273-8300

Telephone inquiries concerning this decision should be directed to the undersigned at 571-272-7253.

All other inquiries concerning either the examination or status of the application should be directed to the Technology Center.

The application is being forwarded to the Technology Center Art Unit 2834 for action in its regular turn.

Monica A. Graves
Petitions Examiner
Office of Petitions

UNITED STATES PATENT AND TRADEMARK OFFICE

UNITED STATES DEPARTMENT OF COMMERCE
United States Patent and Trademark Office
Address: COMMISSIONER FOR PATENTS
P.O. Box 1450
Alexandria, Virginia 22313-1450
www.uspto.gov

APPLICATION NO.	FILING DATE	FIRST NAMED INVENTOR	ATTORNEY DOCKET NO.	CONFIRMATION NO.
11/489,579	07/20/2006	Bhaskar Jayaraman	200503433-2	1222

7590 04/14/2008

HEWLETT PACKARD COMPANY
P O BOX 272400, 3404 E. HARMONY ROAD
INTELLECTUAL PROPERTY ADMINISTRATION
FORT COLLINS, CO 80527-2400

EXAMINER	
PATEL, JAYANTI K	

ART UNIT	PAPER NUMBER
2619	

NOTIFICATION DATE	DELIVERY MODE
04/14/2008	ELECTRONIC

DECISION GRANTING PETITION UNDER 37 CFR 1.138(d)

The declaration of express abandonment is recognized

This is in response to the petition under 37 CFR 1.138(d), requesting for a refund of any previously paid search fee and excess claims fee in the above-identified application.

The petition is granted.

The express abandonment is recognized. Any previously paid search fee and excess claims fee are hereby refunded.

Telephone inquiries should be directed to the Office of Data Management at (571) 272-4200.

Patent Publication Branch
Office of Data Management

Adjustment date: 04/15/2008 DTERRY 11489579
07/21/2006 HGUTEMA1 00000060 082025
02 FC:1111 500.00 CR

UNITED STATES PATENT AND TRADEMARK OFFICE

Commissioner for Patents
United States Patent and Trademark Office
P.O. Box 1450
Alexandria, VA 22313-1450
www.uspto.gov

OPPENHEIMER WOLFF & DONNELLY LLP
45 SOUTH SEVENTH STREET, SUITE 3300
MINNEAPOLIS MN 55402

MAILED

JUN 2 1 2010

OFFICE OF PETITIONS

In re Application of	:	
Jason ARTOF et al	:	
Application No. 11/489,663	:	DECISION ON PETITION
Filed: July 17, 2006	:	
Attorney Docket No. 22561-4901/US/2	:	

This is a decision on the petition under 37 CFR 1.182, filed, December 01, 2009, to correct priority claim.

The petition is **DISMISSED**.

Petitioners request to correct priority claim as originally filed.

A newly executed oath or declaration is required in a continuation-in-part filed under 37 CFR 1.53 (b) (2), because a continuation-in-part is being claimed with a preliminary amendment inserting the continuing data desired.

Further correspondence with respect to this matter should be addressed as follows:

By mail: Mail Stop PETITIONS
Commissioner for Patents
Post Office Box 1450
Alexandria, VA 22313-1450

By hand: Customer Service Window

Mail Stop Petitions
Randolph Building
401 Dulany Street
Alexandria, VA 22314

By fax: (571) 273-8300
ATTN: Office of Petitions

Any questions concerning this matter may be directed to Michelle R. Eason at (571) 272-4231.

Thurman K. Page
Petitions Examiner
Office of Petitions

UNITED STATES PATENT AND TRADEMARK OFFICE

UNITED STATES DEPARTMENT OF COMMERCE
United States Patent and Trademark Office
Address: COMMISSIONER FOR PATENTS
P.O. Box 1450
Alexandria, Virginia 22313-1450
www.uspto.gov

PERRY + CURRIER INC.
(FOR RIM)
1300 YONGE STREET
SUITE 500
TORONTO, ON M4T-1X3
CANADA

Mail Date: 04/20/2010

Applicant	: Steve Hanov	: DECISION ON REQUEST FOR
Patent Number	: 7639645	: RECALCULATION of PATENT
Issue Date	: 12/29/2009	: TERM ADJUSTMENT IN VIEW
Appliction No	: 11/489,669	: OF WYETH AND NOTICE OF INTENT TO
Filed	: 07/20/2006	: ISSUE CERTIFICATE OF CORRECTION
		:

The Request for Recalculation is **GRANTED** to the extent indicated.

The patent term adjustment has been determined to be **674** days. The USPTO will *sua sponte* issue a certificate of correction reflecting the amount of PTA days determined by the recalculation.

Prior to the issuance of the certificate of correction, the USPTO will afford patentee an opportunity to be heard and request reconsideration. Accordingly, patentee has **one month or thirty (30) days**, whichever is longer, to file a request for reconsideration of this patent term adjustment calculation. See 35 U.S.C. 154(b)(3)(B)(ii) and 37 CFR 1.322(a)(4). No extensions of time will be granted under 37 CFR 1.136.

Patentee should use document code PET.OP if electronically filing a request for reconsideration of this patent term adjustment calculation. The patentee must also include the information required by 37 CFR 1.705(b)(2) and the fee required by 37 CFR 1.18(e). If patentee does not file a timely request for reconsideration of this patent term adjustment calculation including the information required by 37 CFR 1.705(b)(2) and the fee required by 37 CFR 1.18(e), the USPTO will issue a certificate of correction reflecting the PTA determination noted above.

Patentee should be aware that in order to preserve the right to review in the United States District Court for the District of Columbia of the USPTO patent term adjustment determination, patentee must ensure that he or she also take the steps required under 35 U.S.C. 154(b)(4)(A) in a timely manner. Nothing in the request for recalculation should be construed as providing an alternative time frame for commencing a civil action under 35 U.S.C. 154(b)(4)(A).

Any questions concerning this decision should be directed to the Office of Patent Legal Administration at 571-272-7702.

UNITED STATES PATENT AND TRADEMARK OFFICE

Commissioner for Patents
United States Patent and Trademark Office
P.O. Box 1450
Alexandria, VA 22313-1450
www.uspto.gov

BERESKIN AND PARR LLP/S.E.N.C.R.L.,s.r.l
40 KING STREET WEST
BOX 401
TORONTO ON M5H 3Y2 CA CANADA

COPY MAILED

DEC 14 2009

OFFICE OF PETITIONS

In re Application of :
Changize Sadr :
Application No. 11/489,683 :
Filed: July 20, 2006 :
Attorney Docket No. 6052-245/HRH :

DECISION ON PETITION
TO WITHDRAW
FROM RECORD

This is a decision on the Request to Withdraw as attorney or agent under 37 C.F.R. § 1.36(b) or 37 C.F.R. § 10.40 filed October 9, 2009.

The request is **APPROVED**.

A review of the file record indicates that Nathalie Jodoin: (1) does not have power of attorney in this patent application; and (2) has been employed or otherwise engaged in the proceedings in this patent application. In view of the present decision, Nathalie Jodoin has been withdrawn from the present application and may not prepare or submit papers under 37 C.F.R. § 1.34, or correspond in any manner in this application unless appointed in an acceptable power of attorney under 37 C.F.R. § 1.32(b).

Telephone inquires concerning this decision should be directed to Irvin Dingle at 571-272-3210.

Irvin Dingle
Petitions Examiner
Office of Petitions

cc: Nathalie Jodoin
Centre CDP Capital
1001 Spuare Victoria – Bloc E – 8th Fl
Montreal, Quebec H2Z 2B7
Canada

UNITED STATES PATENT AND TRADEMARK OFFICE

UNITED STATES DEPARTMENT OF COMMERCE
United States Patent and Trademark Office
Address: COMMISSIONER FOR PATENTS
P.O. Box 1450
Alexandria, Virginia 22313-1450
www.uspto.gov

APPLICATION NUMBER	FILING OR 371(C) DATE	FIRST NAMED APPLICANT	ATTY. DOCKET NO./TITLE
11/489,683	07/20/2006	Changize Sadr	6052-245/HRH

CONFIRMATION NO. 1450

POWER OF ATTORNEY NOTICE

20559
ROBIC
CENTRE CDP CAPITAL
1001, VICTORIA SQUARE - BLOC E - 8TH FLOOR
MONTREAL, QC H2Z 2B7
CANADA

Date Mailed: 12/14/2009

NOTICE REGARDING CHANGE OF POWER OF ATTORNEY

This is in response to the Power of Attorney filed 12/01/2009.

- The Power of Attorney to you in this application has been revoked by the assignee who has intervened as provided by 37 CFR 3.71. Future correspondence will be mailed to the new address of record(37 CFR 1.33).

/idingle/

Office of Data Management, Application Assistance Unit (571) 272-4000, or (571) 272-4200, or 1-888-786-0101

UNITED STATES PATENT AND TRADEMARK OFFICE

UNITED STATES DEPARTMENT OF COMMERCE
United States Patent and Trademark Office
Address: COMMISSIONER FOR PATENTS
P.O. Box 1450
Alexandria, Virginia 22313-1450
www.uspto.gov

APPLICATION NUMBER	FILING OR 371(C) DATE	FIRST NAMED APPLICANT	ATTY. DOCKET NO./TITLE
11/489,683	07/20/2006	Changize Sadr	6052-245/HRH

CONFIRMATION NO. 1450

POA ACCEPTANCE LETTER

1059
BERESKIN AND PARR LLP/S.E.N.C.R.L., s.r.l.
40 KING STREET WEST
BOX 401
TORONTO, ON M5H 3Y2
CANADA

Date Mailed: 12/14/2009

NOTICE OF ACCEPTANCE OF POWER OF ATTORNEY

This is in response to the Power of Attorney filed 12/01/2009.

The Power of Attorney in this application is accepted. Correspondence in this application will be mailed to the above address as provided by 37 CFR 1.33.

/idingle/

Office of Data Management, Application Assistance Unit (571) 272-4000, or (571) 272-4200, or 1-888-786-0101

UNITED STATES PATENT AND TRADEMARK OFFICE

Commissioner for Patents
United States Patent and Trademark Office
P.O. Box 1450
Alexandria, VA 22313-1450
www.uspto.gov

COPY MAILED

MAY 21 2008

OFFICE OF PETITIONS

LOWE HAUPTMAN HAM & BERNER, LLP
1700 DIAGONAL ROAD
SUITE 300
ALEXANDRIA, VA 22314

In re Application of :
Seong Je Park :
Application No. 11/489,685 : ON PETITION
Filed: July 20, 2006 :
Attorney Docket No. 123034-06067188

This is a decision on the petition, filed May 20, 2008 under 37 CFR 1.313(c)(2) to withdraw the above-identified application from issue after payment of the issue fee.

The petition is **GRANTED**.

The above-identified application is withdrawn from issue for consideration of a submission under 37 CFR 1.114 (request for continued examination). See 37 CFR 1.313(c)(2).

Petitioner is advised that the issue fee paid on April 2, 2008 in the above-identified application cannot be refunded. If, however, the above-identified application is again allowed, petitioner may request that it be applied towards the issue fee required by the new Notice of Allowance.[1]

Telephone inquiries should be directed to Irvin Dingle at (571) 272-3210.

This matter is being referred to Technology Center AU 2824 for processing of the request for continued examination under 37 CFR 1.114 and for consideration of the concurrently filed Information Disclosure Statement.

Irvin Dingle
Petitions Examiner
Office of Petitions

[1] The request to apply the issue fee to the new Notice may be satisfied by completing and returning the new Issue Fee Transmittal Form PTOL-85(b), which includes the following language thereon: Commissioner for Patents is requested to apply the Issue Fee and Publication Fee (if any) or re-apply any previously paid issue fee to the application identified above. Petitioner is advised that, whether a fee is indicated as being due or not, the Issue Fee Transmittal Form **must** be completed and timely submitted to avoid abandonment. Note the language in bold text on the first page of the Notice of Allowance and Fee(s) Due (PTOL-85).

UNITED STATES PATENT AND TRADEMARK OFFICE

Commissioner for Patents
United States Patent and Trademark Office
P.O. Box 1450
Alexandria, VA 22313-1450
www.uspto.gov

KALIKO & YEAGER, L.L.C.
500 NORTH FRANKLIN TURNPIKE
RAMSEY NJ 07446

COPY MAILED

MAR 2 7 2007

OFFICE OF PETITIONS

In re Application of	:	
Xu, Hongzhan	:	
Application No. 11/489,692	:	DECISION GRANTING
Filed: July 19, 2006	:	PETITION
Attorney Docket No. HX-001	:	

This is a decision on the petition filed August 17, 2006, which is being treated under 37 CFR §1.53(e)(2)[1] to accord the above-identified application a filing date of July 19, 2006.

The application was filed on July 19, 2006. However, on August 7, 2006, the Office of Initial Patent Examination (OIPE) mailed a "Notice of Incomplete Nonprovisional Application" notifying applicant that the application papers had not been accorded a filing date because the application was deposited without drawings.[2]

In reply, petitioner timely filed the instant petition. Petitioner asserts that the application as deposited with the USPTO was complete including drawings and is entitled to a filing date of July 19, 2006. In support thereof, petitioner submits a copy of an Office date-stamped postcard receipt whereby the Office acknowledges receiving "4 Sheets of Formal Drawings," among other items, on July 19, 2006.

A postcard receipt, which itemizes and properly identifies the items which are being filed, serves as *prima facie* evidence of receipt in the Office of all items listed thereon on the date stamped thereon by the Office. See MPEP 503. The evidence is convincing that the application as filed on July 19, 2006 included drawings and thus, is entitled to a filing date of July 19, 2006.

Accordingly, the petition is **GRANTED**.

Given the basis for granting the petition, the petition fee of $400.00 will be refunded via treasury check in due course.

This matter is being referred to OIPE for further **processing with a filing date of July 19, 2006, using the drawings supplied with the petition and an indication in Office records that the drawings were present on filing.**

---

[1] §1.53(e)(2) provides that "Any request for review of a notification pursuant to paragraph (e)(1) of this section, or a notification that the original application papers lack a portion of the specification or drawing(s), must be by way of a petition pursuant to this paragraph. ... In the absence of a timely (§1.181(f)) petition pursuant to this paragraph, the filing date of an application in which the applicant was notified of a filing error pursuant to paragraph (e)(1) of this section will be the date the filing error is corrected."

[2] See 35 U.S.C. 111(a)(4).

Telephone inquiries concerning this matter may be directed to Petitions Examiner Liana Walsh at (571) 272-3206.

Frances Hicks
Petitions Examiner
Office of Petitions

UNITED STATES PATENT AND TRADEMARK OFFICE

Commissioner for Patents
United States Patent and Trademark Office
P.O. Box 1450
Alexandria, VA 22313-1450
www.uspto.gov

COPY MAILED

SEP 21 2007

OFFICE OF PETITIONS

KNOBBE MARTENS OLSON & BEAR LLP
2040 MAIN STREET
FOURTEENTH FLOOR
IRVINE CA 92614

In re Application of
Herman Theodore Marwitz, Terry Wheaton, Brian Chung, David Scheieri, James Yang and Keith Michael
Application No.11/489,698
Filed: July 19, 2006
Attorney Docket No. PACCO.023
Title of Invention: Mobile Nitrogen Generation Device

DECISION GRANTING STATUS UNDER 37 CFR 1.47(A)

This is in response to the petition under 37 CFR 1.47(a) filed March 12, 2007 (certificate of mailing March 8, 2007).

The petition is GRANTED.

Petitioner has shown that non-signing inventor Michael has refused to join in the filing of the above-identified application after having been presented with the application papers. The petition attest a copy of the application was sent to non-signing inventor's last known address. Petitioner states that the non-signing inventor orally refused to execute the application papers.

The above-identified application and papers have been reviewed and found in compliance with 37 CFR 1.47(a). This application is hereby accorded Rule 1.47(a) status.

As provided in Rule 1.47(c), this Office will forward notice of this application's filing to the non-signing inventor at the address given in the petition. Notice of the filing of this application will also be published in the *Official Gazette*.

After this decision is mailed, the application will be forwarded to the Office of Initial Patent Examination for further processing.

Telephone inquiries regarding this communication should be directed to the undersigned at (571) 272-3215.

Charlema R. Grant
Petitions Attorney
Office of Petitions

UNITED STATES PATENT AND TRADEMARK OFFICE

Commissioner for Patents
United States Patent and Trademark Office
P.O. Box 1450
Alexandria, VA 22313-1450
www.uspto.gov

Keith Michael
511 Hansen
West Chester, PA 19380

COPY MAILED

SEP 21 2007

OFFICE OF PETITIONS

In re Application of
Herman Theodore Marwitz, Terry Wheaton, Brian Chung, David Scheieri, James Yang and Keith Michael
Application No.11/489,698
Filed: July 19, 2006
Attorney Docket No. PACCO.023
Title of Invention: Mobile Nitrogen Generation Device

: LETTER

Dear Mr. Michael:

You are named as a joint inventor in the above-identified United States patent application filed under the provisions of 35 U.S.C. § 116 (United States Code) and 37 C.F.R. § 1.47(a), Rules of Practice in Patent Cases. Should a patent be granted on the application you will be designated therein as a joint inventor.

As a named inventor you are entitled to inspect any paper in the file wrapper of the application, order copies of all or any part thereof (at a prepaid cost as per 37 C.F.R. § 1.19) or make your position of record in the application. Alternatively, you may arrange to do any of the preceding through a registered patent attorney or agent presenting written authorization from you. If you care to join the application, counsel of record (see below) would presumably assist you. Joining in the application would entail the filing of an appropriate oath or declaration by you pursuant to 37 C.F.R. § 1.63.

Telephone inquiries regarding this communication should be directed to Petitions Attorney Charlema R. Grant at (571) 272-3215. Requests for information regarding your application should be directed to the File Information Unit at (703) 308-2733. Information regarding how to pay for and order a copy of the application, or a specific paper in the application, should be directed to Certification Division at (703) 308-9726 or 1-800-972-6382 (outside the Washington D.C. area).

Charlema R. Grant
Petitions Attorney
Office of Petitions

KNOBBE MARTENS OLSON & BEAR LLP
2040 MAIN STREET
FOURTEENTH FLOOR
IRVINE CA 92614
ATTN: Michael A. Guiliana

UNITED STATES PATENT AND TRADEMARK OFFICE

UNITED STATES DEPARTMENT OF COMMERCE
United States Patent and Trademark Office
Address: COMMISSIONER FOR PATENTS
P.O. Box 1450
Alexandria, Virginia 22313-1450
www.uspto.gov

KNOBBE MARTENS OLSON & BEAR LLP
2040 MAIN STREET
FOURTEENTH FLOOR
IRVINE, CA 92614

Mail Date: 04/20/2010

Applicant	: Herman Theodore Marwitz	: DECISION ON REQUEST FOR
Patent Number	: 7588612	: RECALCULATION of PATENT
Issue Date	: 09/15/2009	: TERM ADJUSTMENT IN VIEW
Appliction No	: 11/489,698	: OF WYETH AND NOTICE OF INTENT TO
Filed	: 07/19/2006	: ISSUE CERTIFICATE OF CORRECTION
		:

The Request for Recalculation is **GRANTED** to the extent indicated.

The patent term adjustment has been determined to be **282** days. The USPTO will *sua sponte* issue a certificate of correction reflecting the amount of PTA days determined by the recalculation.

Prior to the issuance of the certificate of correction, the USPTO will afford patentee an opportunity to be heard and request reconsideration. Accordingly, patentee has **one month or thirty (30) days**, whichever is longer, to file a request for reconsideration of this patent term adjustment calculation. See 35 U.S.C. 154(b)(3)(B)(ii) and 37 CFR 1.322(a)(4). No extensions of time will be granted under 37 CFR 1.136.

Patentee should use document code PET.OP if electronically filing a request for reconsideration of this patent term adjustment calculation. The patentee must also include the information required by 37 CFR 1.705(b)(2) and the fee required by 37 CFR 1.18(e). If patentee does not file a timely request for reconsideration of this patent term adjustment calculation including the information required by 37 CFR 1.705(b)(2) and the fee required by 37 CFR 1.18(e), the USPTO will issue a certificate of correction reflecting the PTA determination noted above.

Patentee should be aware that in order to preserve the right to review in the United States District Court for the District of Columbia of the USPTO patent term adjustment determination, patentee must ensure that he or she also take the steps required under 35 U.S.C. 154(b)(4)(A) in a timely manner. Nothing in the request for recalculation should be construed as providing an alternative time frame for commencing a civil action under 35 U.S.C. 154(b)(4)(A).

Any questions concerning this decision should be directed to the Office of Patent Legal Administration at 571-272-7702.

UNITED STATES PATENT AND TRADEMARK OFFICE

UNITED STATES DEPARTMENT OF COMMERCE
United States Patent and Trademark Office
Address: COMMISSIONER FOR PATENTS
P.O. Box 1450
Alexandria, Virginia 22313-1450
www.uspto.gov

KNOBBE MARTENS OLSON & BEAR LLP
2040 MAIN STREET
FOURTEENTH FLOOR
IRVINE, CA 92614

Mail Date: 04/20/2010

Applicant	: Shinya Naitou	: DECISION ON REQUEST FOR
Patent Number	: 7592733	: RECALCULATION of PATENT
Issue Date	: 09/22/2009	: TERM ADJUSTMENT IN VIEW
Appliction No	: 11/489,699	: OF WYETH AND NOTICE OF INTENT TO
Filed	: 07/19/2006	: ISSUE CERTIFICATE OF CORRECTION
		:

The Request for Recalculation is **GRANTED** to the extent indicated.

The patent term adjustment has been determined to be **428** days. The USPTO will *sua sponte* issue a certificate of correction reflecting the amount of PTA days determined by the recalculation.

Prior to the issuance of the certificate of correction, the USPTO will afford patentee an opportunity to be heard and request reconsideration. Accordingly, patentee has **one month or thirty (30) days**, whichever is longer, to file a request for reconsideration of this patent term adjustment calculation. See 35 U.S.C. 154(b)(3)(B)(ii) and 37 CFR 1.322(a)(4). No extensions of time will be granted under 37 CFR 1.136.

Patentee should use document code PET.OP if electronically filing a request for reconsideration of this patent term adjustment calculation. The patentee must also include the information required by 37 CFR 1.705(b)(2) and the fee required by 37 CFR 1.18(e). If patentee does not file a timely request for reconsideration of this patent term adjustment calculation including the information required by 37 CFR 1.705(b)(2) and the fee required by 37 CFR 1.18(e), the USPTO will issue a certificate of correction reflecting the PTA determination noted above.

Patentee should be aware that in order to preserve the right to review in the United States District Court for the District of Columbia of the USPTO patent term adjustment determination, patentee must ensure that he or she also take the steps required under 35 U.S.C. 154(b)(4)(A) in a timely manner. Nothing in the request for recalculation should be construed as providing an alternative time frame for commencing a civil action under 35 U.S.C. 154(b)(4)(A).

Any questions concerning this decision should be directed to the Office of Patent Legal Administration at 571-272-7702.

UNITED STATES PATENT AND TRADEMARK OFFICE

UNITED STATES DEPARTMENT OF COMMERCE
United States Patent and Trademark Office
Address: COMMISSIONER FOR PATENTS
P.O. Box 1450
Alexandria, Virginia 22313-1450
www.uspto.gov

KNOBBE MARTENS OLSON & BEAR LLP
2040 MAIN STREET
FOURTEENTH FLOOR
IRVINE, CA 92614

Mail Date: 04/20/2010

Applicant	: Shinya Naitou	: DECISION ON REQUEST FOR
Patent Number	: 7592733	: RECALCULATION of PATENT
Issue Date	: 09/22/2009	: TERM ADJUSTMENT IN VIEW
Appliction No	: 11/489,699	: OF WYETH AND NOTICE OF INTENT TO
Filed	: 07/19/2006	: ISSUE CERTIFICATE OF CORRECTION
		:

The Request for Recalculation is **GRANTED** to the extent indicated.

The patent term adjustment has been determined to be **428** days. The USPTO will *sua sponte* issue a certificate of correction reflecting the amount of PTA days determined by the recalculation.

Prior to the issuance of the certificate of correction, the USPTO will afford patentee an opportunity to be heard and request reconsideration. Accordingly, patentee has **one month or thirty (30) days**, whichever is longer, to file a request for reconsideration of this patent term adjustment calculation. See 35 U.S.C. 154(b)(3)(B)(ii) and 37 CFR 1.322(a)(4). No extensions of time will be granted under 37 CFR 1.136.

Patentee should use document code PET.OP if electronically filing a request for reconsideration of this patent term adjustment calculation. The patentee must also include the information required by 37 CFR 1.705(b)(2) and the fee required by 37 CFR 1.18(e). If patentee does not file a timely request for reconsideration of this patent term adjustment calculation including the information required by 37 CFR 1.705(b)(2) and the fee required by 37 CFR 1.18(e), the USPTO will issue a certificate of correction reflecting the PTA determination noted above.

Patentee should be aware that in order to preserve the right to review in the United States District Court for the District of Columbia of the USPTO patent term adjustment determination, patentee must ensure that he or she also take the steps required under 35 U.S.C. 154(b)(4)(A) in a timely manner. Nothing in the request for recalculation should be construed as providing an alternative time frame for commencing a civil action under 35 U.S.C. 154(b)(4)(A).

Any questions concerning this decision should be directed to the Office of Patent Legal Administration at 571-272-7702.

UNITED STATES PATENT AND TRADEMARK OFFICE

UNITED STATES DEPARTMENT OF COMMERCE
United States Patent and Trademark Office
Address: COMMISSIONER FOR PATENTS
P.O. Box 1450
Alexandria, Virginia 22313-1450
www.uspto.gov

KNOBBE MARTENS OLSON & BEAR LLP
2040 MAIN STREET
FOURTEENTH FLOOR
IRVINE, CA 92614

Mail Date: 05/17/2010

Applicant : Shinya Naitou
Patent Number : 7592733
Issue Date : 09/22/2009
Application No: 11/489,699
Filed : 07/19/2006

: NOTICE CONCERNING IMPROPER
: CALCULATION OF PATENT TERM
: ADJUSTMENT BASED UPON USPTO
: IMPROPERLY MEASURING REDUCTION
: PERIOD UNDER 37 CFR 1.704(c)(10).

The United States Patent and Trademark Office (USPTO) discovered that in processing the recent recalculation decisions mailed in response to patentee's filed Request for Recalculation of Patent Term Adjustment in view of Wyeth, the USPTO improperly measured the reduction period for reductions under 37 CFR 1.704(c)(10). Pursuant to 37 CFR 1.704(c)(10), patentee's reduction begins on the date of filing the amendment under 37 CFR 1.312 ("1.312 amendment") or other related paper and ends on the date that the Office mails a response to the filing of the 1.312 amendment or other paper. It has been discovered that during the recalculation, the calculation failed to the limit the reduction to the mail date of the response to the 1.312 amendment or other paper. Accordingly, patentee's reductions were greater than warranted.

This notice **VACATES** the previous GRANTED request for recalculation and provides patentee with a revised GRANTED recalculation.

The patent term adjustment has been determined to be **468** days. The USPTO will *sua sponte* issue a certificate of correction reflecting the amount of patent term adjustment (PTA) days determined by the recalculation.

Prior to the issuance of the certificate of correction, the USPTO will afford patentee an opportunity to be heard and request reconsideration. Accordingly, patentee has **one month or thirty (30) days** from the mail date of this notice, whichever is longer, to file a request for reconsideration of this PTA calculation. See 35 U.S.C. § 154(b)(3)(B)(ii) and 37 CFR 1.322(a)(4).

Patentee should use document code PET.OP if electronically filing a request for reconsideration of this PTA calculation. The patentee must also include the information required by 37 CFR 1.705(b)(2), and the fee required by 37 CFR 1.18(e). If patentee does not file a timely request for reconsideration of this PTA calculation, including the information required by 37 CFR 1.705(b)(2) and the fee required by 37 CFR 1.18(e), the USPTO will issue a certificate of correction reflecting the PTA determination noted above.

Patentee should be aware that in order to preserve the right of review of the USPTO's PTA determination in the United States District Court for the District of Columbia, patentee must ensure that the steps required under 35 U.S.C. § 154 (b)(4) are taken in a timely manner. Nothing in the request for recalculation should be construed as providing an alternative time frame for commencing a civil action under 35 U.S.C. § 154(b)(4).

UNITED STATES PATENT AND TRADEMARK OFFICE

UNITED STATES DEPARTMENT OF COMMERCE
United States Patent and Trademark Office
Address: COMMISSIONER FOR PATENTS
P.O. Box 1450
Alexandria, Virginia 22313-1450
www.uspto.gov

VENABLE LLP
P.O. BOX 34385
WASHINGTON, DC 20043-9998

Mail Date: 04/21/2010

Applicant	: Michael John Stokes	: DECISION ON REQUEST FOR
Patent Number	: 7586264	: RECALCULATION of PATENT
Issue Date	: 09/08/2009	: TERM ADJUSTMENT IN VIEW
Appliction No	: 11/489,712	: OF WYETH AND NOTICE OF INTENT TO
Filed	: 07/20/2006	: ISSUE CERTIFICATE OF CORRECTION
		:

The Request for Recalculation is **GRANTED** to the extent indicated.

The patent term adjustment has been determined to be **653** days. The USPTO will *sua sponte* issue a certificate of correction reflecting the amount of PTA days determined by the recalculation.

Prior to the issuance of the certificate of correction, the USPTO will afford patentee an opportunity to be heard and request reconsideration. Accordingly, patentee has **one month or thirty (30) days**, whichever is longer, to file a request for reconsideration of this patent term adjustment calculation. See 35 U.S.C. 154(b)(3)(B)(ii) and 37 CFR 1.322(a)(4). No extensions of time will be granted under 37 CFR 1.136.

Patentee should use document code PET.OP if electronically filing a request for reconsideration of this patent term adjustment calculation. The patentee must also include the information required by 37 CFR 1.705(b)(2) and the fee required by 37 CFR 1.18(e). If patentee does not file a timely request for reconsideration of this patent term adjustment calculation including the information required by 37 CFR 1.705(b)(2) and the fee required by 37 CFR 1.18(e), the USPTO will issue a certificate of correction reflecting the PTA determination noted above.

Patentee should be aware that in order to preserve the right to review in the United States District Court for the District of Columbia of the USPTO patent term adjustment determination, patentee must ensure that he or she also take the steps required under 35 U.S.C. 154(b)(4)(A) in a timely manner. Nothing in the request for recalculation should be construed as providing an alternative time frame for commencing a civil action under 35 U.S.C. 154(b)(4)(A).

Any questions concerning this decision should be directed to the Office of Patent Legal Administration at 571-272-7702.

UNITED STATES PATENT AND TRADEMARK OFFICE

Commissioner for Patents
United States Patent and Trademark Office
P.O. Box 1450
Alexandria, VA 22313-1450
www.uspto.gov

COPY MAILED

MAY 27 2008

OFFICE OF PETITIONS

Ronald D. Trice
6412 Brandon Avenue
#145
Springfield, VA 22150

In re Application of
Zhijian Lu
Application No. 11/489,715
Filed: July 20, 2006
Attorney Docket No. PEK-010

DECISION ON PETITION
TO WITHDRAW
FROM RECORD

This is a decision on the Request to Withdraw as attorney or agent of record under 37 C.F.R § 1.36(b), filed January 11, 2008.

The request is **APPROVED**.

A grantable request to withdraw as attorney/agent of record must be signed by every attorney/agent seeking to withdraw or contain a clear indication that one attorney is signing on behalf of another/others. A request to withdraw will not be approved unless at least 30 (thirty) days would remain between the date of approval and the later of the expiration date of a time to file a response or the expiration date of the maximum time period which can be extended under 37 C.F.R. § 1.136(a).

The request was signed by Ronald D. Trice on behalf of all attorneys/agents associated with customer number 55300 of record. All attorneys/agents associated with customer number 55300 have been withdrawn.

Applicant is advised that there is no attorney of record.

The correspondence address has been changed to that of the inventor and is copied below.

Telephone inquiries concerning this decision should be directed to Kimberly Inabinet at 571-272-4618.

Kimberly Inabinet
Petitions Examiner
Office of Petitions

cc: Zhijian Lu
23 McElroy Lane
Belle Mead, NJ 08502

UNITED STATES PATENT AND TRADEMARK OFFICE

UNITED STATES DEPARTMENT OF COMMERCE
United States Patent and Trademark Office
Address: COMMISSIONER FOR PATENTS
P.O. Box 1450
Alexandria, Virginia 22313-1450
www.uspto.gov

APPLICATION NUMBER	FILING OR 371(C) DATE	FIRST NAMED APPLICANT	ATTY. DOCKET NO./TITLE
11/489,715	07/20/2006	Zhijian Lu	PEK-010

CONFIRMATION NO. 1083

POWER OF ATTORNEY NOTICE

55300
RONALD D. TRICE
6412 BRANDON AVE.
145
SPRINGFIELD, VA 22150

Date Mailed: 05/27/2008

NOTICE REGARDING CHANGE OF POWER OF ATTORNEY

This is in response to the Power of Attorney filed 01/11/2008.

- The withdrawal as attorney in this application has been accepted. Future correspondence will be mailed to the new address of record. 37 CFR 1.33.

/kainabinet/

Office of Data Management, Application Assistance Unit (571) 272-4000, or (571) 272-4200, or 1-888-786-0101

UNITED STATES PATENT AND TRADEMARK OFFICE

UNITED STATES DEPARTMENT OF COMMERCE
United States Patent and Trademark Office
Address: COMMISSIONER FOR PATENTS
P.O. Box 1450
Alexandria, Virginia 22313-1450
www.uspto.gov

APPLICATION NO.	FILING DATE	FIRST NAMED INVENTOR	ATTORNEY DOCKET NO.	CONFIRMATION NO.
11/489,722	07/20/2006	Simon Craske	550-838	1073

23117 7590 09/01/2009
NIXON & VANDERHYE, PC
901 NORTH GLEBE ROAD, 11TH FLOOR
ARLINGTON, VA 22203

EXAMINER	
GIROUX, GEORGE	

ART UNIT	PAPER NUMBER
2183	

MAIL DATE	DELIVERY MODE
09/01/2009	PAPER

Please find below and/or attached an Office communication concerning this application or proceeding.

The time period for reply, if any, is set in the attached communication.

UNITED STATES PATENT AND TRADEMARK OFFICE

Commissioner for Patents
United States Patent and Trademark Office
P.O. Box 1450
Alexandria, VA 22313-1450
www.uspto.gov

MAILED

SEP 02 2009

TECHNOLOGY CENTER 2100

NIXON & VANDERHYE, PC
901 NORTH GLEBE ROAD, 11TH FLOOR
ARLINGTON VA 22203

In re Application of: Simon Craske
Application No. 11/489,722
Filed: July 20, 2006
For: DATA PROCESSING HANDLING IN A DATA PROCESSING SYSTEM

DECISION ON PETITION

This is a decision on the petition filed on May 19, 2009, under 37 CFR 1.181(a) to invoke Supervisory Authority requesting that the Notice of Abandonment mailed on April 6, 2009 be corrected to remove reference to Attorney's opinion with regard to Applicants' intent, "in particular the comment under section 7 "Applicant's representative confirmed applicant's intent to abandon the application, via telephone, on 24 March 2009" ....". Applicant's Attorney asserts that he never opined as to any intent on the applicant's part, and hence requests that the statement be deleted from the record.

Petition is **GRANTED**.

The Office Action mailed April 6, 2009 is hereby withdrawn and vacated. The Office Action has been closed from public view as of mailing of this decision.

A new Notice of Abandonment was mailed on August 21, 2009.

Any inquiry concerning this decision should be directed to Mano Padmanabhan whose telephone number is (571) 272-4210.

Nestor Ramirez, Director
Technology Center 2100
Computer Architecture, Software, and
Information Security

NRR:mp

DECISION ON PETITION ROUTING SLIP

Application No.: 11489722

Art Unit: 2183

For Director's Secretary:

☑ **Granted** ☐ **Denied** ☐ **Dismissed**

☑ Decision to be reviewed and signed by Director

☑ Mail Decision & enter decision in Petition Database

☑ Forward a copy of the mailed decision to IFW for scanning

☑ Enter Paper Nos xxx and the decision in PALM

☐ Other

For TECH Support Staff:

☐ Process and enter Paper Nos.

☐ Charge fee to D.A. No

☐ Other

☑ Forward file to examiner for mailing of a new notice of abandonment

Quality Assurance Specialist No. 1:	Quality Assurance Specialist No. 2:	Quality Assurance Specialist No. 3:	Quality Assurance Specialist No. 4:
Vincent Trans WQAS 2160 RND-4B07 (571) 272-3613	Brian Johnson, WQAS 2110, RND 4A01 (571) 272- 3595		Tod Swann

Quality Assurance Specialist No. 5:	Quality Assurance Specialist No. 6:	Quality Assurance Specialist No. 7:	Quality Assurance Specialist No. 8:
Gail Hayes	Kakali Chaki WQAS 2120, RND 5A05 (571)272- 3719	Rehana Perveen, WQAS 2100, RND 3A75, (571)272- 3676	Mano Padmanabhan WQAS 2180, RND 2A79 (571) 272-4210

UNITED STATES PATENT AND TRADEMARK OFFICE

Commissioner for Patents
United States Patent and Trademark Office
P.O. Box 1450
Alexandria, VA 22313-1450
www.uspto.gov

JJGJR.: 08-07

Paper No: __

MCDONNELL BOEHNEN
HULBERT & BERGHOFF LLP
300 S. WACKER DRIVE
32ND FLOOR
CHICAGO IL 60606

COPY MAILED

SEP 0 4 2007

OFFICE OF PETITIONS

In re Application of
Almasri, et al.
Application No. 11/489,742
Filed: 19 July, 2006
Attorney Docket No. 07-2397-A

ON PETITION

This is a decision on the petition filed on 12 February, 2007, under 37 C.F.R. §1.47(a).

The Office regrets the delay in addressing this matter, however, the instant petition was presented to the attorneys in the Office of Petitions only at this writing.[1]

For the reasons set forth below, the petition under 37 C.F.R. §1.47(a) is **GRANTED**.

BACKGROUND

The record indicates:

- the instant application was filed on 19 July, 2006, without, *inter alia*, a fully executed oath/declaration;

- on 8 August, 2006, the Office mailed a Notice of Missing Parts indicating, *inter alia*, that a fully executed oath/declaration (signed and dated) was required;

---

[1] **NOTE: Monitoring of the status of applications on PAIR can inform one's management of application responses and provide an indication when mailings of Office actions should be expected. Status Inquiries filed at three (3) or four (4) month intervals provide a demonstration of diligence and attention in supporting a petition seeking relief under 37 C.F.R. §1.181.**

- on 12 February, 2007, Petitioner Steven B. Courtright (Reg. No. 40,966) filed, *inter alia*, the instant petition, an oath/declaration signed by Mr. Beal (for himself and on behalf of) but without that of non-signing co-inventor Rashed Almasri (Mr. Almasri), and Petitioner's statement, which sets forth that the entire application (description, claims, abstract and drawings) was sent to the non-signing inventor for review–notably only on the last of the transmissions of materials as evidenced by the transmittal letters–as required by statute and regulation, and that the non-signing inventor has not joined in the oath/declaration.

Out of an abundance of caution, Petitioners always are reminded that those registered to practice *and* all others who make representations before the Office are reminded to inquire into the underlying facts of representations made to the Office and support averments with the appropriate documentation–since all owe to the Office the continuing duty to disclose.[2]

---

[2] See supplement of 17 June, 1999. The Patent and Trademark Office is relying on petitioner's duty of candor and good faith and accepting a statement made by Petitioner. See Changes to Patent Practice and Procedure, 62 Fed. Reg. at 53160 and 53178, 1203 Off. Gaz. Pat. Office at 88 and 103 (responses to comments 64 and 109)(applicant obligated under 37 C.F.R. §10.18 to inquire into the underlying facts and circumstances when providing statements to the Patent and Trademark Office).

Specifically, the regulations at 37 C.F.R. §10.18 provide:

§ 10.18 Signature and certificate for correspondence filed in the Patent and Trademark Office.
(a) For all documents filed in the Office in patent, trademark, and other non-patent matters, except for correspondence that is required to be signed by the applicant or party, each piece of correspondence filed by a practitioner in the Patent and Trademark Office must bear a signature by such practitioner complying with the provisions of §1.4(d), §1.4(e), or § 2.193(c)(1) of this chapter.
(b) By presenting to the Office (whether by signing, filing, submitting, or later advocating) any paper, the party presenting such paper, whether a practitioner or non-practitioner, is certifying that—

(1) All statements made therein of the party's own knowledge are true, all statements made therein on information and belief are believed to be true, and all statements made therein are made with the knowledge that whoever, in any matter within the jurisdiction of the Patent and Trademark Office, knowingly and willfully falsifies, conceals, or covers up by any trick, scheme, or device a material fact, or makes any false, fictitious or fraudulent statements or representations, or makes or uses any false writing or document knowing the same to contain any false, fictitious or fraudulent statement or entry, shall be subject to the penalties set forth under 18 U.S.C. 1001, and that violations of this paragraph may jeopardize the validity of the application or document, or the validity or enforceability of any patent, trademark registration, or certificate resulting therefrom; and

(2) To the best of the party's knowledge, information and belief, formed after an inquiry reasonable under the circumstances, that —

(i) The paper is not being presented for any improper purpose, such as to harass someone or to cause unnecessary delay or needless increase in the cost of prosecution before the Office;

(ii) The claims and other legal contentions therein are warranted by existing law or by a nonfrivolous argument for the extension, modification, or reversal of existing law or the establishment of new law;

(iii) The allegations and other factual contentions have evidentiary support or, if specifically so identified, are likely to have evidentiary support after a reasonable opportunity for further investigation or discovery; and

(iv) The denials of factual contentions are warranted on the evidence, or if specifically so identified, are reasonably based on a lack of information or belief.

(c) Violations of paragraph (b)(1) of this section by a practitioner or non-practitioner may jeopardize the validity of the application or document, or the validity or enforceability of any patent, trademark registration, or certificate resulting therefrom. Violations of any of paragraphs (b)(2)(i) through (iv) of this section are, after notice and reasonable opportunity to respond, subject to such sanctions as deemed appropriate by the Commissioner, or the Commissioner's designee, which may include, but are not limited to, any combination of —

(1) Holding certain facts to have been established;
(2) Returning papers;
(3) Precluding a party from filing a paper, or presenting or contesting an issue;
(4) Imposing a monetary sanction;
(5) Requiring a terminal disclaimer for the period of the delay; or
(6) Terminating the proceedings in the Patent and Trademark Office.

This application and its papers have been reviewed and found in compliance with 37 C.F.R. §1.47(a).

This application hereby is **ACCORDED status under 37 C.F.R. §1.47(a)**.

As provided under 37 C.F.R. §1.47(a), the Office will forward notice of this application's filing to the non-signing inventor at the address given in the petition.

Notice of the filing of this application also will be published in the Official Gazette.

This file is being released to OIPE for processing as necessary to reflect the instant decision before being released for further processing in due course.

While telephone inquiries regarding this decision may be directed to the undersigned at (571) 272-3214, it is noted that all practice before the Office is in writing (see: 37 C.F.R. §1.2[3]) and the proper authority for action on any matter in this regard are the statutes (35 U.S.C.), regulations (37 C.F.R.) and the commentary on policy (MPEP). Therefore, no telephone discussion may be controlling or considered authority for Petitioner's/Caller's action(s).

John J. Gillon, Jr.
Senior Attorney
Office of Petitions

(d) Any practitioner violating the provisions of this section may also be subject to disciplinary action. See § 10.23(c)(15).
[Added 50 FR 5175, Feb. 6, 1985, effective Mar. 8, 1985; para. (a) revised, 58 FR 54494, Oct. 22, 1993, effective Nov. 22, 1993; paras. (a) & (b) revised, paras. (c) & (d) added, 62 FR 53131, Oct. 10, 1997, effective Dec. 1, 1997; para. (a) revised, 69 FR 56481, Sept. 21, 2004, effective Oct. 21, 2004]

[3] The regulations at 37 C.F.R. §1.2 provide:
§1.2 Business to be transacted in writing.
All business with the Patent and Trademark Office should be transacted in writing.The personal attendance of applicants or their attorneys or agents at the Patent and Trademark Office is unnecessary. The action of the Patent and Trademark Office will be based exclusively on the written record in the Office. No attention will be paid to any alleged oral promise, stipulation,or understanding in relation to which there is disagreement or doubt.

UNITED STATES PATENT AND TRADEMARK OFFICE

Commissioner for Patents
United States Patent and Trademark Office
P.O. Box 1450
Alexandria, VA 22313-1450
www.uspto.gov

JJGJR.: 08-07

Paper No: __

COPY MAILED

SEP 0 4 2007

OFFICE OF PETITIONS

RASHED ALMASRI
8803 GASHAWKE LANE
FT. WAYNE, IN 46825

In re Application of
Almasri, et al.
Application No. 11/489,742
Filed: 19 July, 2006
Attorney Docket No. 07-2397-A

COMMUNICATION

Dear Rashed Almasri:

You are named as inventor in the above identified United States patent application, filed under the provisions of 35 U.S.C. §116 (United States Code), and 37 C.F.R. §1.47,[1] ¶a, Rules of Practice in Patent Cases. Should a patent be granted on the application you will be designated therein as inventor.

As a named inventor you are entitled to inspect any paper in the file wrapper of the application, order copies of all or any part thereof (at a prepaid cost per 37 C.F.R. §1.19) or make your position of record in the application. Alternatively, you may arrange to do any of the preceding

---

[1] The regulations at 37 C.F.R. §1.47 provide:

§ 1.47 Filing when an inventor refuses to sign or cannot be reached.

(a) If a joint inventor refuses to join in an application for patent or cannot be found or reached after diligent effort, the application may be made by the other inventor on behalf of himself or herself and the nonsigning inventor. The oath or declaration in such an application must be accompanied by a petition including proof of the pertinent facts, the fee set forth in §1.17(h), and the last known address of the nonsigning inventor. The nonsigning inventor may subsequently join in the application by filing an oath or declaration complying with §1.63.

(b) Whenever all of the inventors refuse to execute an application for patent, or cannot be found or reached after diligent effort, a person to whom an inventor has assigned or agreed in writing to assign the invention, or who otherwise shows sufficient proprietary interest in the matter justifying such action, may make application for patent on behalf of and as agent for all the inventors. The oath or declaration in such an application must be accompanied by a petition including proof of the pertinent facts, a showing that such action is necessary to preserve the rights of the parties or to prevent irreparable damage, the fee set forth in §1.17(h), and the last known address of all of the inventors. An inventor may subsequently join in the application by filing an oath or declaration complying with §1.63.

© The Office will send notice of the filing of the application to all inventors who have not joined in the application at the address(es) provided in the petition under this section, and publish notice of the filing of the application in the *Official Gazette*. The Office may dispense with this notice provision in a continuation or divisional application, if notice regarding the filing of the prior application was given to the nonsigning inventor(s).

[47 Fed. Reg. 41275, Sept. 17, 1982, effective Oct. 1, 1982; 48 Fed. Reg. 2709, Jan. 20, 1983, effective Feb. 27, 1983; revised, 62 Fed. Reg. 53131, Oct. 10, 1997, effective Dec. 1, 1997; revised, 65 Fed. Reg. 54604, Sept. 8, 2000, effective Nov. 7, 2000]

through a registered patent attorney or agent presenting written authorization from you. If you care to join the application, counsel of record (see below) would presumably assist you. Joining in the application would entail the filing of an appropriate oath or declaration by you pursuant to 37 C.F.R. §1.63.

Requests for information regarding your application should be directed to the File Information Unit at (703) 308-2733.

Information regarding how to pay for and order a copy of the application, or a specific paper in the application, should be directed to Certification Division at (703) 308-9726 or toll-free: (800) 972-6382 (outside the Washington D.C. area).

While telephone inquiries regarding this decision may be directed to the undersigned at (571) 272-3214, it is noted that all practice before the Office is in writing (see: 37 C.F.R. §1.2[2]) and the proper authority for action on any matter in this regard are the statutes (35 U.S.C.), regulations (37 C.F.R.) and the commentary on policy (MPEP). Therefore, no telephone discussion may be controlling or considered authority for Petitioner's/Caller's action(s).

John J. Gillon, Jr.
Senior Attorney
Office of Petitions

Counsel of Record:
MCDONNELL BOEHNEN
HULBERT & BERGHOFF LLP
300 S. WACKER DRIVE
32ND FLOOR
CHICAGO IL 60606

[2] The regulations at 37 C.F.R. §1.2 provide:

§1.2 Business to be transacted in writing.

All business with the Patent and Trademark Office should be transacted in writing.The personal attendance of applicants or their attorneys or agents at the Patent and Trademark Office is unnecessary. The action of the Patent and Trademark Office will be based exclusively on the written record in the Office. No attention will be paid to any alleged oral promise, stipulation,or understanding in relation to which there is disagreement or doubt.

UNITED STATES PATENT AND TRADEMARK OFFICE

Commissioner for Patents
United States Patent and Trademark Office
P.O. Box 1450
Alexandria, VA 22313-1450
www.uspto.gov

Customer# 43214
EMPK & SHILOH, LLP
116 JOHN ST.
SUITE 1201
NEW YORK, NY 10038

COPY MAILED

AUG 27 2007

OFFICE OF PETITIONS

In re Application of :
BLOON, Ilan et al. :
Application No. 11/489,747 : DECISION ON PETITION
Filed: July 18, 2006 : TO WITHDRAW
Attorney Docket No. **ELG-P-9095-US** : FROM RECORD
:

This is a decision on the Request to Withdraw as attorney or agent of record under 37 C.F.R. § 1.36(b), filed June 29, 2007.

The request is **NOT APPROVED**.

A grantable request to withdraw as attorney/agent of record must be signed by every attorney/agent seeking to withdraw or contain a clear indication that one attorney is signing on behalf of another/others. A request to withdraw will not be approved unless at least 30 (thirty) days would remain between the date of approval and the later of the expiration date of a time to file a response or the expiration date of the maximum time period which can be extended under 37 C.F.R. § 1.136(a).

The request to withdraw less than all attorneys appointed by customer number 43214 cannot be approved. The addition and/or deletion of a practitioner from the list of practitioners associated with a Customer Number should be made by submitting a "Request for Customer Number Data Change" (PTO/SB/124) which will result in the addition or deletion of such practitioner from the list of persons authorized to represent any applicant or assignee of the entire interest who appointed all of the practitioners associated with such Customer Number. See MPEP 403 Section I. Customer Number Practice.

All future communications from the Office will continue to be directed to the above-listed address until otherwise notified by applicant.

Telephone inquiries concerning this decision should be directed to Michelle R. Eason at 571-272- 4231.

T. Williams

Terri Williams
Petitions Examiner
Office of Petitions

cc: **Customer# 56639**
EMPK & SHILOH, LLP
116 JOHN ST,
SUITE 1201
NEW YORK, NY 10038

UNITED STATES PATENT AND TRADEMARK OFFICE

Commissioner for Patents
United States Patent and Trademark Office
P.O. Box 1450
Alexandria, VA 22313-1450
www.uspto.gov

DLA PIPER LLP (US)
2000 UNIVERSITY AVENUE
EAST PALO ALTO, CA 94303-2248

MAILED

AUG 24 2009

OFFICE OF PETITIONS

In re Application of :
Davis et al. :
Application No. 11/489,758 : DECISION ON PETITION
Filed: July 20, 2006 :
Attorney Docket No. 351909-991153 :

This is a decision on the petition under the unintentional provisions of 37 CFR 1.137(b), filed July 21, 2009, to revive the above-identified application.

The petition is **GRANTED**.

The application became abandoned for failure to reply in a timely manner to the non-final Office action mailed, December 22, 2008, which set a shortened statutory period for reply of three (3) months. No extensions of time under the provisions of 37 CFR 1.136(a) were obtained. Accordingly, the application became abandoned on March 23 2009.

The petition satisfies the requirements of 37 CFR 1.137(b) in that petitioner has supplied (1) the reply in the form of an amendment , (2) the petition fee of $1,620, and (3) an adequate statement of unintentional delay.

An extension of time under 37 CFR 1.136 must be filed prior to the expiration of the maximum extendable period for reply. See In re Application of S., 8 USPQ2d 1630, 1631 (Comm'r Pats. 1988). Since the extension of time fees of $1,110 and $620, submitted with the petition on July 21, 2009 were subsequent to the maximum extendable period for reply, the fees are unnecessary and will be credited to petitioner's deposit account.

Telephone inquiries concerning this decision should be directed to Alicia Kelley at (571)272-6059.

This application is being referred to Technology Center 2872 for further examination on the merits.

/SDB/

Sherry D. Brinkley
Petitions Examiner
Office of Petitions

UNITED STATES PATENT AND TRADEMARK OFFICE

Commissioner for Patents
United States Patent and Trademark Office
P.O. Box 1450
Alexandria, VA 22313-1450
www.uspto.gov

POLSTER, LIEDER, WOODRUFF & LUCCHESI
12412 POWERSCOURT DRIVE SUITE 200
ST. LOUIS, MO 63131-3615

COPY MAILED

DEC 0 2 2009

OFFICE OF PETITIONS

In re Application of :
Richard G. Coppola :
Application No. 11/489,760 : ON PETITION
Filed: July 20, 2006 :
Attorney Docket No. COIN9338C1 :

This is a decision on the petition under 37 CFR 1.137(b), filed August 27, 2009, to revive the above-identified application.

The petition is **dismissed**.

The application became abandoned for failure to file a reply to the non-final Office action mailed on March 28, 2008. A Notice of Abandonment was mailed on November 6, 2008.

A grantable petition under 37 CFR 1.137(b) must be accompanied by: (1) the required reply, unless previously filed; (2) the petition fee as set forth in 37 CFR 1.17(m); (3) a statement that the entire delay in filing the required reply from the due date for the reply until the filing of a grantable petition pursuant to 37 CFR 1.137(b) was unintentional[1]; and (4) any terminal disclaimer (and fee as set forth in 37 CFR 1.20(d)) required by 37 CFR 1.137(d). The instant petition lacks item(s) (1).

It is noted that the non-final Office action mailed March 28, 2008 objected to drawing Figures 4, 10 and 11. With the present petition, the Office acknowledges receipt of three sheets of replacement drawings containing two sheets of drawings labeled as Figure 4 (Prior Art) and one sheet of drawing containing Figure 10. However, the record fails to show a replacement drawing for Figure 11. Therefore, missing Figure 11 with the appropriate labeling must be submitted before revival can occur.

[1] Where there is a question as to whether either the abandonment or the delay in filing a petition under 37 CFR 1.137 was unintentional, the Commissioner may require additional information. See MPEP 711.03(c)(III)(C) and (D).

Any request for reconsideration of this decision must be submitted within **TWO (2) MONTHS** from the mail date of this decision. Extensions of time under 37 CFR 1.136(a) is permitted. The reconsideration request should include a cover letter entitled "Renewed Petition under 37 CFR 1.137(b)." This is **not** a final agency action within the meaning of 5 U.S.C. § 704.

Further correspondence with respect to this matter should be addressed as follows:

By mail:
Mail Stop PETITION
Commissioner for Patents
P. O. Box 1450
Alexandria, VA 22313-1450

By hand:
U. S. Patent and Trademark Office
Customer Service Window, Mail Stop Petitions
Randolph Building
401 Dulany Street
Alexandria, VA 22314

The centralized facsimile number is (571) 273-8300.

Telephone inquiries concerning this decision should be directed to the undersigned at (571) 272-3226.

Andrea Smith
Petitions Examiner
Office of Petitions

UNITED STATES PATENT AND TRADEMARK OFFICE

Commissioner for Patents
United States Patent and Trademark Office
P.O. Box 1450
Alexandria, VA 22313-1450
www.uspto.gov

POLSTER, LIEDER, WOODRUFF & LUCCHESI
12412 POWERSCOURT DRIVE SUITE 200
ST. LOUIS, MO 63131-3615

MAILED

FEB 18 2010

OFFICE OF PETITIONS

In re Application of :
Richard G. Coppola :
Application No. 11/489,760 : ON PETITION
Filed: July 20, 2006 :
Attorney Docket No. COIN9338C1 :

This is a decision on the renewed petition under 37 CFR 1.137(b), filed January 4, 2010, to revive the above-identified application.

In response to the decision mailed on December 2, 2009, petitioner submits the present renewed petition along with replacement Figure 11[1].

Since the petition satisfies the requirements of 37 CFR 1.137(b), in that petitioner has supplied (1) the replacement sheets of drawings for Figures 4, 10 and 11; (2) the petition fee of $1,620; and (3) a proper statement of unintentional delay, the petition is **GRANTED**.

This application file is being referred to Technology Center Art Unit 3651 for further processing in accordance with this decision.

Telephone inquiries concerning this decision should be directed to the undersigned at (571) 272-3226.

Andrea Smith
Petitions Examiner
Office of Petitions

[1] The Office acknowledges receipt of three sheets of replacement sheets of drawings containing Figures 4 and 10 filed on August 27, 2009.

UNITED STATES PATENT AND TRADEMARK OFFICE

Commissioner for Patents
United States Patent and Trademark Office
P.O. Box 1450
Alexandria, VA 22313-1450
www.uspto.gov

Morrison & Foerster LLP
755 Page Mill Road
Palo Alto, CA 94304-1018

COPY MAILED

AUG 20 2007

OFFICE OF PETITIONS

In re Application of :
Elizabeth M. Jaffee :
Application No. 11/489,762 : DECISION ON PETITION
Filed: July 19, 2006 : TO WITHDRAW
Attorney Docket No. 001107.00641 : FROM RECORD
:

This is a decision on the Request to Withdraw as attorney or agent of record under 37 C.F.R. § 1.36(b), filed April 9, 2007.

The request is **NOT APPROVED** as moot.

A review of the file record indicates that the power of attorney to Morrison & Foerster LLP has been revoked by the assignee of the patent application on June 15, 2007. Accordingly, the request to withdraw under 37 C.F.R. § 1.36(b) is moot.

All future communications from the Office will continue to be directed to the below-listed address until otherwise notified by applicant.

Telephone inquires concerning this decision should be directed to Terri Williams at 571-272-2991.

Terri Williams
Petitions Examiner
Office of Petitions

cc: **Banner & Witcoff, LTD**
1100 13th Street, N.W.
Suite 1200
Washington, DC 20005-4051

UNITED STATES PATENT AND TRADEMARK OFFICE

UNITED STATES DEPARTMENT OF COMMERCE
United States Patent and Trademark Office
Address: COMMISSIONER FOR PATENTS
P.O. Box 1450
Alexandria, Virginia 22313-1450
www.uspto.gov

LEFFERT JAY & POLGLAZE, P.A.
P.O. BOX 581009
MINNEAPOLIS, MN 55458-1009

Mail Date: 04/20/2010

Applicant	: Luca De Santis	: DECISION ON REQUEST FOR
Patent Number	: 7644240	: RECALCULATION of PATENT
Issue Date	: 01/05/2010	: TERM ADJUSTMENT IN VIEW
Appliction No	: 11/489,778	: OF WYETH AND NOTICE OF INTENT TO
Filed	: 07/20/2006	: ISSUE CERTIFICATE OF CORRECTION
		:

The Request for Recalculation is **GRANTED** to the extent indicated.

The patent term adjustment has been determined to be **200** days. The USPTO will *sua sponte* issue a certificate of correction reflecting the amount of PTA days determined by the recalculation.

Prior to the issuance of the certificate of correction, the USPTO will afford patentee an opportunity to be heard and request reconsideration. Accordingly, patentee has **one month or thirty (30) days**, whichever is longer, to file a request for reconsideration of this patent term adjustment calculation. See 35 U.S.C. 154(b)(3)(B)(ii) and 37 CFR 1.322(a)(4). No extensions of time will be granted under 37 CFR 1.136.

Patentee should use document code PET.OP if electronically filing a request for reconsideration of this patent term adjustment calculation. The patentee must also include the information required by 37 CFR 1.705(b)(2) and the fee required by 37 CFR 1.18(e). If patentee does not file a timely request for reconsideration of this patent term adjustment calculation including the information required by 37 CFR 1.705(b)(2) and the fee required by 37 CFR 1.18(e), the USPTO will issue a certificate of correction reflecting the PTA determination noted above.

Patentee should be aware that in order to preserve the right to review in the United States District Court for the District of Columbia of the USPTO patent term adjustment determination, patentee must ensure that he or she also take the steps required under 35 U.S.C. 154(b)(4)(A) in a timely manner. Nothing in the request for recalculation should be construed as providing an alternative time frame for commencing a civil action under 35 U.S.C. 154(b)(4)(A).

Any questions concerning this decision should be directed to the Office of Patent Legal Administration at 571-272-7702.

UNITED STATES PATENT AND TRADEMARK OFFICE

UNITED STATES DEPARTMENT OF COMMERCE
United States Patent and Trademark Office
Address: COMMISSIONER FOR PATENTS
P.O. Box 1450
Alexandria, Virginia 22313-1450
www.uspto.gov

INGRASSIA FISHER & LORENZ, P.C. (FS)
7010 E. COCHISE ROAD
SCOTTSDALE, AZ 85253

Mail Date: 04/20/2010

Applicant	: Daniel N. Koury JR.	: DECISION ON REQUEST FOR
Patent Number	: 7628072	: RECALCULATION of PATENT
Issue Date	: 12/08/2009	: TERM ADJUSTMENT IN VIEW
Appliction No	: 11/489,789	: OF WYETH AND NOTICE OF INTENT TO
Filed	: 07/19/2006	: ISSUE CERTIFICATE OF CORRECTION
		:

The Request for Recalculation is **GRANTED** to the extent indicated.

The patent term adjustment has been determined to be **702** days. The USPTO will *sua sponte* issue a certificate of correction reflecting the amount of PTA days determined by the recalculation.

Prior to the issuance of the certificate of correction, the USPTO will afford patentee an opportunity to be heard and request reconsideration. Accordingly, patentee has **one month or thirty (30) days**, whichever is longer, to file a request for reconsideration of this patent term adjustment calculation. See 35 U.S.C. 154(b)(3)(B)(ii) and 37 CFR 1.322(a)(4). No extensions of time will be granted under 37 CFR 1.136.

Patentee should use document code PET.OP if electronically filing a request for reconsideration of this patent term adjustment calculation. The patentee must also include the information required by 37 CFR 1.705(b)(2) and the fee required by 37 CFR 1.18(e). If patentee does not file a timely request for reconsideration of this patent term adjustment calculation including the information required by 37 CFR 1.705(b)(2) and the fee required by 37 CFR 1.18(e), the USPTO will issue a certificate of correction reflecting the PTA determination noted above.

Patentee should be aware that in order to preserve the right to review in the United States District Court for the District of Columbia of the USPTO patent term adjustment determination, patentee must ensure that he or she also take the steps required under 35 U.S.C. 154(b)(4)(A) in a timely manner. Nothing in the request for recalculation should be construed as providing an alternative time frame for commencing a civil action under 35 U.S.C. 154(b)(4)(A).

Any questions concerning this decision should be directed to the Office of Patent Legal Administration at 571-272-7702.

UNITED STATES PATENT AND TRADEMARK OFFICE

Commissioner for Patents
United States Patent and Trademark Office
P.O. Box 1450
Alexandria, VA 22313-1450
www.uspto.gov

FEB 19 2010

W. Michael Dixon
Global Intellectual Property Services
Deere & Company
One John Deere Place
Moline, IL 61265

In re Application of:	:	**DECISICION ON PETITION**
Peter SHARPE et al.	:	**TO REQUEST THE**
Application No. 11/489,794	:	**THE ACCEPTANCE OF COLOR**
Filed: July 20, 2006	:	**DRAWINGS UNDER 1.84**
For: DIRECTIONAL BUSHING	:	

This is a decision on applicant's petition under 37 C.F. R. 1.84(a)(2) filed May 4, 2009 requesting the acceptance of color drawings for the above identified application.

The petition is GRANTED.

The invention is directed to a directional bushing provided for a pinned joint of an articulated structure such as a front end loader used with a work vehicle. The color figures 5 and 6 represent the results of Finite Element Analyses (FEA) wherein the various colors indicate varying degrees of stress.

Applicant is requesting the acceptance of colored drawings because black and white drawings do not adequately illustrate the results of the FEA.

The criteria for accepting color drawings in a patent application is set forth in MPEP 608.02 and 37 C.F.R. 1.84(a)(2). In the instant application, it is considered that color drawings are the only practical medium for disclosing the subject matter to be patented. Therefore, colored drawings of figures 5 and 6 have been accepted.

Any questions regarding this decision should be directed to Saul J. Rodriguez, Supervisory Patent Examiner, at (571) 272-7097.

David L. Talbott, Director
Patent Technology Center 3600
(571) 272-5150

SJR/LM: 1/25/2010
LM

UNITED STATES PATENT AND TRADEMARK OFFICE

UNITED STATES DEPARTMENT OF COMMERCE
United States Patent and Trademark Office
Address: COMMISSIONER FOR PATENTS
P.O. Box 1450
Alexandria, Virginia 22313-1450
www.uspto.gov

U.S. Army Communications-Electronics Command
ATTN: AMSEL-L-G-L
Fort Monmouth, NJ 07703-5010

Mail Date: 04/21/2010

Applicant	: Paul C. Manz	: DECISION ON REQUEST FOR
Patent Number	: 7598850	: RECALCULATION of PATENT
Issue Date	: 10/06/2009	: TERM ADJUSTMENT IN VIEW
Appliction No	: 11/489,800	: OF WYETH AND NOTICE OF INTENT TO
Filed	: 07/12/2006	: ISSUE CERTIFICATE OF CORRECTION
		:

The Request for Recalculation is **GRANTED** to the extent indicated.

The patent term adjustment has been determined to be **561** days. The USPTO will *sua sponte* issue a certificate of correction reflecting the amount of PTA days determined by the recalculation.

Prior to the issuance of the certificate of correction, the USPTO will afford patentee an opportunity to be heard and request reconsideration. Accordingly, patentee has **one month or thirty (30) days**, whichever is longer, to file a request for reconsideration of this patent term adjustment calculation. See 35 U.S.C. 154(b)(3)(B)(ii) and 37 CFR 1.322(a)(4). No extensions of time will be granted under 37 CFR 1.136.

Patentee should use document code PET.OP if electronically filing a request for reconsideration of this patent term adjustment calculation. The patentee must also include the information required by 37 CFR 1.705(b)(2) and the fee required by 37 CFR 1.18(e). If patentee does not file a timely request for reconsideration of this patent term adjustment calculation including the information required by 37 CFR 1.705(b)(2) and the fee required by 37 CFR 1.18(e), the USPTO will issue a certificate of correction reflecting the PTA determination noted above.

Patentee should be aware that in order to preserve the right to review in the United States District Court for the District of Columbia of the USPTO patent term adjustment determination, patentee must ensure that he or she also take the steps required under 35 U.S.C. 154(b)(4)(A) in a timely manner. Nothing in the request for recalculation should be construed as providing an alternative time frame for commencing a civil action under 35 U.S.C. 154(b)(4)(A).

Any questions concerning this decision should be directed to the Office of Patent Legal Administration at 571-272-7702.

UNITED STATES PATENT AND TRADEMARK OFFICE

UNITED STATES DEPARTMENT OF COMMERCE
United States Patent and Trademark Office
Address: COMMISSIONER FOR PATENTS
P.O. Box 1450
Alexandria, Virginia 22313-1450
www.uspto.gov

U.S. Army Communications
Electronics Command
ATTN: AMSEL-LG-L
Fort Monmouth, NJ 07703-5010

Mail Date: 04/21/2010

Applicant	: Paul C. Manz	: DECISION ON REQUEST FOR
Patent Number	: 7602281	: RECALCULATION of PATENT
Issue Date	: 10/13/2009	: TERM ADJUSTMENT IN VIEW
Appliction No	: 11/489,802	: OF WYETH AND NOTICE OF INTENT TO
Filed	: 07/19/2006	: ISSUE CERTIFICATE OF CORRECTION
		:

The Request for Recalculation is **GRANTED** to the extent indicated.

The patent term adjustment has been determined to be **288** days. The USPTO will *sua sponte* issue a certificate of correction reflecting the amount of PTA days determined by the recalculation.

Prior to the issuance of the certificate of correction, the USPTO will afford patentee an opportunity to be heard and request reconsideration. Accordingly, patentee has **one month or thirty (30) days**, whichever is longer, to file a request for reconsideration of this patent term adjustment calculation. See 35 U.S.C. 154(b)(3)(B)(ii) and 37 CFR 1.322(a)(4). No extensions of time will be granted under 37 CFR 1.136.

Patentee should use document code PET.OP if electronically filing a request for reconsideration of this patent term adjustment calculation. The patentee must also include the information required by 37 CFR 1.705(b)(2) and the fee required by 37 CFR 1.18(e). If patentee does not file a timely request for reconsideration of this patent term adjustment calculation including the information required by 37 CFR 1.705(b)(2) and the fee required by 37 CFR 1.18(e), the USPTO will issue a certificate of correction reflecting the PTA determination noted above.

Patentee should be aware that in order to preserve the right to review in the United States District Court for the District of Columbia of the USPTO patent term adjustment determination, patentee must ensure that he or she also take the steps required under 35 U.S.C. 154(b)(4)(A) in a timely manner. Nothing in the request for recalculation should be construed as providing an alternative time frame for commencing a civil action under 35 U.S.C. 154(b)(4)(A).

Any questions concerning this decision should be directed to the Office of Patent Legal Administration at 571-272-7702.

UNITED STATES PATENT AND TRADEMARK OFFICE

Commissioner for Patents
United States Patent and Trademark Office
P.O. Box 1450
Alexandria, VA 22313-1450
www.uspto.gov

DELPHI TECHNOLOGIES, INC.
M/C 480-410-202
PO BOX 5052
TROY MI 48007

MAILED

MAR 26 2009

OFFICE OF PETITIONS

In re Application of :
Giacomo Sciortino et al. :
Application No. 11/489,823 : ON PETITION
Filed: July 20, 2006 :
Attorney Docket No. DP-314140 :

This is a decision on the petition under the unintentional provisions of 37 CFR 1.137(b), filed December 11, 2008, to revive the above-identified application.

The petition is **GRANTED**.

The application became abandoned for failure to timely file a reply within the meaning of 37 CFR 1.113 to the final Office action of June 2, 2008. The proposed reply required for consideration of a petition to revive must be a Notice of Appeal (and appeal fee required by 37 CFR 41.20(b)(2), an amendment that *prima facie* places the application in condition for allowance, a Request for Continued Examination and submission (37 CFR 1.114), or the filing of a continuing application under 37 CFR 1.53(b). See MPEP 711.03(c)(II)(A)(2). A two (2) month extension of time pursuant to the provisions of 37 CFR 1.136(a) was obtained. Accordingly, the date of abandonment of this application is November 3, 2008 (November 2 being a Sunday).

The petition satisfies the requirements of 37 CFR 1.137(b) in that petitioner has supplied (1) the reply in the form of a Request for Continued Examination (RCE) and fee of $810, and the submission required by 37 CFR 1.114; (2) the petition fee of $1,620; and (3) a proper statement of unintentional delay.

Telephone inquiries concerning this decision should be directed to the undersigned at (571) 272-6842.

This application is being referred to Technology Center AU2831for processing of the RCE and for appropriate action by the Examiner in the normal course of business on the amendment submitted in accordance with 37 CFR 1.114.

Carl Friedman
Petitions Examiner
Office of Petitions

UNITED STATES PATENT AND TRADEMARK OFFICE

Commissioner for Patents
United States Patent and Trademark Office
P.O. Box 1450
Alexandria, VA 22313-1450
www.uspto.gov

Date: 05/04/09

Patent No. : 7503887 B2
Ser. No. : 11/489,825
Inventor(s) : WEDER, DONALD E.
Issued : 03/17/09
Title : **METHOD AND APPARATUS FOR MAKING CURLED DECORATIVE GRASS**
Docket No. : **8404.317**

Re: Request for Certificate of Correction

Consideration has been given your request for the issuance of a certificate of correction for the above-identified patent under the provisions of Rule(s) 1.322 and/or 1.323.

Assignees' names and addresses (assignment data) printed in a patent, are based *solely* on information supplied in the appropriate space for identifying the assignment data, i.e., item 3 of the Issue Fee Transmittal Form PTOL-85B. Granting of a request under 37 CFR 3.81(b) is required to correct applicant's error providing ***incorrect or erroneous*** assignment data, *before* issuance of a Certificate of Correction, under 37 CFR 1.323 *(see Manual of Patent Examining Procedures (M.P.E.P) Chp.1400, sect. 1481).* This procedure is required *at any time after the issue fee is paid*, including after issuance of the patent.

In view of the foregoing, your request, in this mater, is hereby denied.

A request to correct the Assignee under 37 CFR 3.81(b) should include:

A. **the processing fee set forth in 37 CFR 1.117(h) (currently $130);**
B. a statement that the failure to include the correct assignee name on the PTOL-85B was inadvertent; and
C. a copy of the Notice of Recordation of Assignment Document, reflecting the reel and frame number where the assignment(s) is recorded and/or reflecting proof of *the date* the assignment was submitted for recordation.

In the Request, Applicant(s) may request that the file be forwarded to Certificates of Correction Branch, for issuance of a Certificate of Correction, if the Request is granted.

Any request under 37 CFR 3.81(b) should be directed to the following address or facsimile number:

By mail: Mail Stop PETITIONS

Commissioner for Patents
Post Office Box 1450
Alexandria, VA 22313-1450

By hand: Customer Service Window
Mail Stop Petitions
Randolph Building
401 Dulany Street
Alexandria, VA 22314

By fax: (571) 273-0025
ATTN: Office of Petitions

If a fee (currently $100) was previously submitted for consideration of a Request for Certificate of Correction, under CFR 1.323, to correct assignment data, no additional fee is required.

Lamonte M. Newsome
For Mary Diggs, Supervisor
Decisions & Certificates
Of Correction Branch
(703) 305-8309 or (703) 308-9390 #112

DUNLAP CODDING, P.C.
PO BOX 16370
OKLAHOMA CITY OK 73113

LMN

UNITED STATES PATENT AND TRADEMARK OFFICE

Commissioner for Patents
United States Patent and Trademark Office
P.O. Box 1450
Alexandria, VA 22313-1450
www.uspto.gov

EMPK & SHILOH, LLP
116 JOHN ST,
SUITE 1201
NEW YORK, NY 10038

COPY MAILED

NOV 19 2007

OFFICE OF PETITIONS

In re Application of :
Michael Genossar, et al. :
Application No. 11/489,830 : DECISION ON PETITION
Filed: July 20, 2006 : TO WITHDRAW
Attorney Docket No. ELG-P-9409US : FROM RECORD
:

This is a decision on the Request to Withdraw as attorney or agent of record under 37 C.F.R. § 1.36(b) filed June 29, 2007.

The request is **APPROVED**.

A grantable request to withdraw as attorney/agent of record must be signed by every attorney/agent seeking to withdraw or contain a clear indication that one attorney is signing on behalf of another/others. A request to withdraw will not be approved unless at least 30 (thirty) days would remain between the date of approval and the later of the expiration date of a time to file a response or the expiration date of the maximum time period which can be extended under 37 C.F.R. § 1.136(a).

The request was signed by Andrew L. Tiajoloff on behalf of all attorneys of record who are associated with customer No. 43214.

All attorneys/agents associated with the Customer Number 43214 have been withdrawn.

Applicant is reminded that there is no attorney of record at this time.

The request to change the correspondence of record is not acceptable as the requested correspondence address is not that of: (1) the first named signing inventor; or (2) an intervening assignee of the entire interest under 37 C.F.R 3.71. All future communications from the Office will be directed to the first named signing inventor at the first copied address below until otherwise properly notified by the applicant.

Telephone inquiries concerning this decision should be directed to undersigned at 571-272-1642.

April M. Wise
Petitions Examiner
Office of Petitions

cc: MICHAEL GENOSSAR
62 BINYAMIN
MODI'IN 71700, ISRAEL

cc: EMPK & SHILOH, LLP
116 JOHN ST,
SUITE 1201
NEW YORK, NY 10038

UNITED STATES PATENT AND TRADEMARK OFFICE

UNITED STATES DEPARTMENT OF COMMERCE
United States Patent and Trademark Office
Address: COMMISSIONER FOR PATENTS
P.O. Box 1450
Alexandria, Virginia 22313-1450
www.uspto.gov

APPLICATION NUMBER	FILING OR 371(C) DATE	FIRST NAMED APPLICANT	ATTY. DOCKET NO./TITLE
11/489,830	07/20/2006	Michael Genossar	ELG-P-9409US

CONFIRMATION NO. 1503

POWER OF ATTORNEY NOTICE

43214
EMPK & SHILOH, LLP
116 John St.
Suite 1201
New York, NY 10038

OC000000026621982

Date Mailed: 11/05/2007

NOTICE REGARDING CHANGE OF POWER OF ATTORNEY

This is in response to the Power of Attorney filed 06/29/2007.

- The withdrawal as attorney in this application has been accepted. Future correspondence will be mailed to the new address of record. 37 CFR 1.33.

/amwise/

Office of Initial Patent Examination (571) 272-4000 or 1-800-PTO-9199

UNITED STATES PATENT AND TRADEMARK OFFICE

Commissioner for Patents
United States Patent and Trademark Office
P.O. Box 1450
Alexandria, VA 22313-1450
www.uspto.gov

RUTAN & TUCKER, LLP.
611 ANTON BLVD
SUITE 1400
COSTA MESA CA 92626

COPY MAILED

JUN 04 2008

OFFICE OF PETITIONS

In re Application of	:	
Geraty, Thomas	:	
Application No. 11/489,832	:	DECISION ON PETITION
Filed: July 19, 2006	:	
Attorney Docket No. 026512-0001P	:	

This is a decision on the petition under the unintentional provisions of 37 CFR 1.137(b), filed May 8, 2008, to revive the above-identified application.

The petition is **GRANTED**.

The petition satisfies the requirements of 37 CFR 1.137(b) in that petitioner has supplied (1) the reply in the form of the Issue Fee Transmittal with payment of the issue and publication fees, (2) the petition fee, and (3) a proper statement of unintentional delay.

Telephone inquiries concerning this decision should be directed to the undersigned at (571) 272-3206.

This matter is being referred to the Office of Data Management for processing into a patent.

Liana Walsh
Petitions Examiner
Office of Petitions

UNITED STATES PATENT AND TRADEMARK OFFICE

Commissioner for Patents
United States Patent and Trademark Office
P.O. Box 1450
Alexandria, VA 22313-1450
www.uspto.gov

COPY MAILED

APR 0 6 2007

OFFICE OF PETITIONS

Kenneth P. Krohn
Post Office Box 4415
Carlsbad CA 92018

In re Application of
MAURO, Tammy
Application No. 11/489,839
Filed: July 20, 2006
Attorney Docket No. **219.11**

DECISION ON PETITION
TO WITHDRAW
FROM RECORD

This is a decision on the Request to Withdraw as attorney or agent of record under 37 C.F.R. § 1.36(b), filed January 13, 2007.

The request is **NOT APPROVED**.

A grantable request to withdraw as attorney/agent of record must be signed by every attorney/agent seeking to withdraw or contain a clear indication that one attorney is signing on behalf of another/others. A request to withdraw will not be approved unless at least 30 (thirty) days would remain between the date of approval and the later of the expiration date of a time to file a response or the expiration date of the maximum time period which can be extended under 37 C.F.R. § 1.136(a).

The Office cannot approve the request at this time since the reasons provided do not meet any of the conditions under the mandatory or permissive categories enumerated in 37 CFR 10.40. Section 10.40 of Title 37 of the Code of Federal Regulation states, "[a] practitioner shall not withdraw from employment in a proceeding before the Office without permission from the Office[.]" More specifically, 37 CFR 10.40 states, "[i]f paragraph (b) of this section is not applicable, a practitioner may not request permission to withdraw in matter pending before the Office unless such request or such withdrawal is" for one the permissive reasons listed in 37 CFR 10.40(c). The reasons set forth in the request, (applicant's failure to abide by the representation agreement, does meet any the conditions set forth in 37 CFR 10.40.

All future communications from the Office will continue to be directed to the above-listed address until otherwise notified by applicant.

Telephone inquiries concerning this decision should be directed to Michelle R. Eason at 571-272- 4231.

Terri Williams
Petitions Examiner
Office of Petitions

cc: **TAMMY MAURO**
1854 OLYMPUS LOOP DRIVE
VISTA, CA 92081

UNITED STATES PATENT AND TRADEMARK OFFICE

Commissioner for Patents
United States Patent and Trademark Office
P.O. Box 1450
Alexandria, VA 22313-1450
www.uspto.gov

KENNETH P. KROHN
POST OFFICE BOX 4415
CARLSBAD CA 92018

COPY MAILED

JUL 11 2007

OFFICE OF PETITIONS

In re Application of

MAURO, Tammy
Application No. 11/489,839
Filed: July 20, 2006
Attorney Docket No. **219.11**

DECISION ON PETITION
TO WITHDRAW
FROM RECORD

This is a decision on the Request to Withdraw as attorney or agent of record under 37 C.F.R. § 1.36(b), filed June 22, 2007.

The request is **APPROVED**.

A grantable request to withdraw as attorney/agent of record must be signed by every attorney/agent seeking to withdraw or contain a clear indication that one attorney is signing on behalf of another/others. A request to withdraw will not be approved unless at least 30 (thirty) days would remain between the date of approval and the later of the expiration date of a time to file a response or the expiration date of the maximum time period which can be extended under 37 C.F.R. § 1.136(a).

The request was signed Kenneth P. Krohn, the sole attorney of record. The undersigned attorney has been withdrawn. Applicant is reminded that there is no attorney of record at this time.

All future correspondence will be directed to the first named inventor Tammy Mauro at the address indicated below.

There are no outstanding office actions at this time.

Telephone inquiries concerning this decision should be directed to Michelle R. Eason at 571-272-4231.

Terri Williams
Petitions Examiner
Office of Petitions

cc: **MS. TAMMY MAURO**
1854 OLYMPUS LOOP DRIVE
VISTA, CA 92081

UNITED STATES PATENT AND TRADEMARK OFFICE

UNITED STATES DEPARTMENT OF COMMERCE
United States Patent and Trademark Office
Address: COMMISSIONER FOR PATENTS
P.O. Box 1450
Alexandria, Virginia 22313-1450
www.uspto.gov

APPLICATION NUMBER	FILING OR 371 (c) DATE	FIRST NAMED APPLICANT	ATTY. DOCKET NO./TITLE
11/489,839	07/20/2006	Tammy Mauro	219.11

CONFIRMATION NO. 1517

Kenneth P. Krohn
Post Office Box 4415
Carlsbad, CA 92018

OC000000024725429

Date Mailed: 07/09/2007

NOTICE REGARDING CHANGE OF POWER OF ATTORNEY

This is in response to the Power of Attorney filed 06/22/2007.

- The withdrawal as attorney in this application has been accepted. Future correspondence will be mailed to the new address of record. 37 CFR 1.33.

Michelle R. Eason

Office of Initial Patent Examination (571) 272-4000, or 1-800-PTO-9199
FORMER ATTORNEY/AGENT COPY

UNITED STATES PATENT AND TRADEMARK OFFICE

Commissioner for Patents
United States Patent and Trademark Office
P.O. Box 1450
Alexandria, VA 22313-1450
www.uspto.gov

MAILED

FEB 22 2010

OFFICE OF PETITIONS

INEOS YSA KKC
3030 WARRENVILLE RD,
S/650
LISLE IL 60532

In re Application of
Marvin I. Trimble et al
Application No. 11/489,845
Filed: July 20, 2006
Attorney Docket No. 37.541

DECISION ON PETITION

This is a decision on the petition under the unintentional provisions of 37 CFR 1.137(b), filed November 23, 2009, to revive the above-identified application.

The petition is **GRANTED**.

The petition satisfies the conditions for revival pursuant to the provisions of 37 CFR 1.137(b) in that (1) the reply in the form of an amendment; (2) the petition fee; and (3) the required statement of unintentional delay have been received. Accordingly, the reply to the final rejection mailed May 13, 2009, is accepted as having been unintentionally delayed.

Telephone inquiries concerning this decision should be directed to the undersigned at (571) 272-3208.

This application is being referred to Technology Center AU 1796 for appropriate action by the Examiner in the normal course of business on the reply received November 23, 2009.

/KOC/
Karen Creasy
Petitions Examiner
Office of Petitions

UNITED STATES PATENT AND TRADEMARK OFFICE

Commissioner for Patents
United States Patent and Trademark Office
P.O. Box 1450
Alexandria, VA 22313-1450
www.uspto.gov

MAIL

MAR 19 2007

DIRECTOR'S OFFICE
TECHNOLOGY CENTER 2600

MERRELL C. SAGER
9845 LITTLEROCK RD. SW
OLYMPIA WA 98512

In re Application of:
Merrell C. Sager
Serial No.: 11/489,851
Filed: July 20, 2006
Attorney Docket Number:
Title: APPLIANCE AND UTILITY SENTRY

DECISION ON PETITION TO MAKE SPECIAL FOR NEW APPLICATION UNDER 37 C.F.R. § 1.102 & M.P.E.P. § 708.02

This is a decision on the petition filed on February 09, 2007 to make the above-identified application special for accelerated examination procedure under 37 C.F.R. § 1.102(d).

The petition to make the application special is **DENIED**.

REGULATION AND PRACTICE

To be eligible for accelerated examination under 37 C.F.R. § 1.102(d) and pursuant to the "Change to Practice for Petitions in Patent Applications to Make Special and for Accelerated Examination" published in the Federal Register on June 26, 2006 (71 Fed. Reg. 36323), the following conditions must be satisfied:

1. The application must be a non-reissue utility or design application filed under 37 CFR 1.111(a);
2. The application, the petition and the required fees must be filed electronically using the USPTO's electronic filing system (EFS), or EFS-web; if not filed electronically, a statement asserting that EFS and EFS-web were not available during the normal business hours;
3. The application, at the time of filing, must be complete under 37 CFR 1.51 and in condition for examination;
4. The application must contain three or fewer independent claims and twenty or fewer total claims and the claims must be directed to a single invention.

The application as filed is not eligible for the accelerated examination under 37 C.F.R. § 1.102(d) because it was not filed electronically using the USPTO's electronic filing system (EFS), or EFS-web; and because the petition was not filed together with the application on or after August 25, 2006 and because the application was not complete at the time of filing, as set forth in condition 3 above. A Notice To File Corrected Application papers was mailed on August 09, 2006.

For the above-stated reasons, the petition is denied. Therefore, the file will be taken up by the examiner in its regular turn.

Any inquiry regarding this decision should be directed to Michael Horabik, Quality Assurance Specialist, at (571) 272-3068.

Michael Horabik
Quality Assurance Specialist
Technology Center 2600
Communications

UNITED STATES PATENT AND TRADEMARK OFFICE

UNITED STATES DEPARTMENT OF COMMERCE
United States Patent and Trademark Office
Address: COMMISSIONER FOR PATENTS
P.O. Box 1450
Alexandria, Virginia 22313-1450
www.uspto.gov

JOHN W. WUSTENBERG
P.O. BOX 1431
DUNCAN, OK 73536

Mail Date: 04/20/2010

Applicant	: Stephen E. Tilghman	: DECISION ON REQUEST FOR
Patent Number	: 7591318	: RECALCULATION of PATENT
Issue Date	: 09/22/2009	: TERM ADJUSTMENT IN VIEW
Appliction No	: 11/489,853	: OF WYETH AND NOTICE OF INTENT TO
Filed	: 07/20/2006	: ISSUE CERTIFICATE OF CORRECTION
		:

The Request for Recalculation is **GRANTED** to the extent indicated.

The patent term adjustment has been determined to be **243** days. The USPTO will *sua sponte* issue a certificate of correction reflecting the amount of PTA days determined by the recalculation.

Prior to the issuance of the certificate of correction, the USPTO will afford patentee an opportunity to be heard and request reconsideration. Accordingly, patentee has **one month or thirty (30) days**, whichever is longer, to file a request for reconsideration of this patent term adjustment calculation. See 35 U.S.C. 154(b)(3)(B)(ii) and 37 CFR 1.322(a)(4). No extensions of time will be granted under 37 CFR 1.136.

Patentee should use document code PET.OP if electronically filing a request for reconsideration of this patent term adjustment calculation. The patentee must also include the information required by 37 CFR 1.705(b)(2) and the fee required by 37 CFR 1.18(e). If patentee does not file a timely request for reconsideration of this patent term adjustment calculation including the information required by 37 CFR 1.705(b)(2) and the fee required by 37 CFR 1.18(e), the USPTO will issue a certificate of correction reflecting the PTA determination noted above.

Patentee should be aware that in order to preserve the right to review in the United States District Court for the District of Columbia of the USPTO patent term adjustment determination, patentee must ensure that he or she also take the steps required under 35 U.S.C. 154(b)(4)(A) in a timely manner. Nothing in the request for recalculation should be construed as providing an alternative time frame for commencing a civil action under 35 U.S.C. 154(b)(4)(A).

Any questions concerning this decision should be directed to the Office of Patent Legal Administration at 571-272-7702.

UNITED STATES PATENT AND TRADEMARK OFFICE

Commissioner for Patents
United States Patent and Trademark Office
P.O. Box 1450
Alexandria, VA 22313-1450
www.uspto.gov

CARLTON FIELDS, PA
1201 WEST PEACHTREE STREET
3000 ONE ATLANTIC CENTER
ATLANTA GA 30309

COPY MAILED

JUN 0 1 2007

OFFICE OF PETITIONS

In re Application of: Iero et al.
Application No.: 11/489,862
Filed: July 20, 2006
Docket No.: E3306/05 US

: DECISION DISMISSING PETITION

This is a decision on the petition under 37 CFR 1.10(d), filed October 10, 2006, requesting that the above-identified application be accorded a filing date of July 19, 2006, rather than the presently accorded date of July 20, 2006.

The petition is DISMISSED.

Any request for reconsideration of this decision should be filed within TWO MONTHS of the date of this decision in order to be considered timely (see 37 CFR 1.181(f)). No extensions of time pursuant to the provisions of 37 CFR 1.136 are permitted. If reconsideration is not requested within the time period specified above, this application will be referred to the Office of Initial Patent Examination with the presently accorded filing date of July 20, 2006.

Any person filing correspondence under 37 CFR 1.10 that was received by the Office and delivered by the "Express Mail Post Office to Addressee" service of the USPS, who can show that the "date-in" on the "Express Mail" mailing label or other official notation entered by the USPS was incorrectly entered or omitted by the USPS, may petition the Director to accord the correspondence a filing date as of the date the correspondence is shown to have been deposited with the USPS.

The showing under 37 CFR 1.10(d) must be corroborated by (1) evidence from the USPS, or (2) evidence that came into being after deposit and within one business day of the deposit of the correspondence as "Express Mail." Evidence from the USPS may be the "Express Mail" Corporate Account Mailing Statement, or the USPS Form 5541C Pickup Service Statement Receipt, which is filled out by the USPS at the time of pick-up of the correspondence as Express Mail. Due to the questionable reliability of evidence from a party other than the USPS that did not come into being contemporaneously with the deposit of the correspondence with the USPS, 37 CFR 1.10(d) specifically requires that any petition under 37 CFR 1.10(d) be corroborated either by evidence from the USPS, or by evidence that came into being after deposit and within one business day

after the deposit of the correspondence as "Express Mail." Evidence that came into being within one day after the deposit of the correspondence as "Express Mail" may be in the form of a log book which contains information such as the "Express Mail" number; the application number, attorney docket number or other such file identification number; the place, date and time of deposit; the time of the last scheduled pick up for that date and place of deposit; the depositor's initials or signature; and the date and time of entry in the log. Conversely, evidence created prior to the deposit of the correspondence as "Express Mail" with the USPS (e.g., an application transmittal cover letter, or a client letter prepared prior to the deposit of the correspondence); or created more than one business day after the deposit of the correspondence as "Express Mail" (e.g., an affidavit or declaration prepared more than one business day after the correspondence was deposited with the USPS as "Express Mail") cannot be accepted under the terms of the rule.

Petitioner requests the earlier filing date on the basis that the application was purportedly deposited in the firm's mail room on the date in question, from which the correspondence was thereafter taken to a nearby Postal Office by mailroom staff member Mary Parks prior to the last scheduled pickup of the day.

A grantable petition under 37 CFR 1.10(d) must include:

> (1) The filing of a petition promptly after the person becomes aware that the Office has accorded, or will accord, a filing date based upon an incorrect entry by the USPS;
>
> (2) The placement of the "Express Mail" number on the mailing label of the paper(s) or fee(s) that constitutes the correspondence prior to the original mailing by "Express Mail"; and
>
> (3) A showing which establishes, to the satisfaction of the Director, that the requested filing date was the date the correspondence was deposited in the "Express Mail Post Office to Addressee" service prior to the last scheduled pickup for that day. Any showing pursuant to this paragraph must be corroborated by evidence from the USPS or that came into being after deposit and within one business day of the deposit of the correspondence in the "Express Mail Post Office to Addressee" service of the USPS.

The petition lacks item (3). The evidence, from either the USPS, or created after deposit with the USPS but within one business day thereafter fails to support the contention that Express Mail package Label Number EV835818004US was properly entrusted to the US Postal Service as Express Mail Postal Service to Addressee on July 19, 2006.

The showing of record is merely that the instant contested correspondence accompanied by First Class mail was deposited with the firm's mail room on the date alleged; it does not establish when and how the instant correspondence was entrusted to the USPS in the manner required by 37 CFR 1.10.

The statement of Mary Parks, the person who brought the correspondence to the USPS was prepared more than one business day after July 19, 2006, and as such is not probative of the issue. Parks' statement is not corroborated by any direct evidence that was prepared **after deposit of the correspondence with the USPS**, yet within one business day of that act, and this is fatal to the petition. Ms. Parks does not state that she has any specific recollection or remembrance that the patent application papers were entrusted to the USPS on the date alleged in the petition. Indeed, it is unclear how any individual routinely involved in the day-to-day handling of papers for filing in the USPTO can recall the specific action(s) pertaining to a particular Express Mail package mailed weeks earlier. As the court observed in Nitto Chemical Industry. Co., Ltd. v. Comer, 39 USPQ2d 1778, 1781, "the affidavits are hardly as probative of the actual date of mailing as are Express Mail receipts." Further, a party's lack of making or maintaining adequate business records to support a contention that a paper was actually entrusted to the USPS does not warrant relief. Krahn, Id.; Honigsbaum v. Lehman, 903 F.Supp. 8, 37 USPQ2d 1799 (D.D.C. 1995) (Commissioner did not abuse his discretion in refusing to waive requirements of 37 CFR 1.10(c) in order to grant filing date to patent application, where applicant failed to produce "Express Mail" customer receipt or any other USPS evidence that application was actually deposited with USPS as "Express Mail"), aff'd without opinion, 95 F.3d 1166 (Fed. Cir.1996). Parks does not attest that to her personal knowledge, and specific remembrance, the instant correspondence was actually entrusted to the USPS as Express Mail on or before the last schedule pickup on the date alleged in the petition. The firm's log book records simply were **not** created after Parks' deposit of the correspondence with the USPS in the Express Mail service, as required. Rather, the copy of the firm's mail log book sheet proffered with the petition was originally prepared while the correspondence remained within the possession of the firm *before* the correspondence had been deposited with the USPTO, and as such is not the evidence required by the rule.

It is further noted that the mere act of deposit of Express Mail correspondence with the USPS on a given date does not in of itself ensure that date will be accorded to the correspondence. See Nitto at 1781-2 (consignment of Express Mail correspondence to a first class mail bin at the USPS does not properly entrust the correspondence to the custody of the USPS for purposes of 37 CFR 1.10). Since there is no showing that petitioner deposited the instant correspondence in the Express Mail Post Office to Addressee service of the USPS prior to the last scheduled pick-up on July 19, 2006, the Office is not permitted, under the terms of 37 CFR 1.10(d), to correct the alleged "date-in" error of the USPS in this instance. See Honigsbaum at 10, 37 USPQ2d at 1800 (USPTO refusal to waive requirements of 37 CFR 1.10, where applicant failed to

produce Official USPS records, in order to grant priority filing date to patent application not arbitrary and capricious, because the evidence submitted by petitioner was not corroborated by any showing outside of counsel's office.)

37 CFR 1.10(b) provides that correspondence should be deposited directly with an employee of the USPS to ensure that the person depositing the correspondence receives a legible copy of the "Express Mail" mailing label with the "date-in" clearly marked, and that persons dealing, as here, indirectly with the employees of the USPS (such as by depositing correspondence in an "Express Mail" drop box) do so at the risk of not receiving a copy of the "Express Mail" mailing label with the desired "date-in" clearly marked.

Further correspondence with respect to this matter should be addressed as follows:

By Mail:
Mail Stop PETITION
Commissioner for Patents
P. O. Box 1450
Alexandria, VA 22313-1450

By facsimile:
(571) 273-8300
Attn: Office of Petitions

By hand:
U. S. Patent and Trademark Office
Customer Service Window, Mail Stop Petitions
Randolph Building
401 Dulany Street
Alexandria, VA 22314

Telephone inquiries concerning this matter may be directed to the undersigned at (571) 272-3217.

Brian Hearn
Petitions Examiner
Office of Petitions

UNITED STATES PATENT AND TRADEMARK OFFICE

Commissioner for Patents
United States Patent and Trademark Office
P.O. Box 1450
Alexandria, VA 22313-1450
www.uspto.gov

CARLTON FIELDS, PA
1201 WEST PEACHTREE STREET
3000 ONE ATLANTIC CENTER
ATLANTA GA 30309

COPY MAILED

JUL 31 2007

OFFICE OF PETITIONS

In re Application of: Iero et al.
Application No.: 11/489,862
Filed: July 19, 2006
Docket No.: E3306/05 US

: DECISION GRANTING PETITION

This is a decision on the renewed petition under 37 CFR 1.10(d), filed July 19, 2007, requesting that the above-identified application be accorded a filing date of July 19, 2006, rather than the presently accorded date of July 20, 2006.

The petition is granted.

The petition is **granted**.

The additional information submitted with this renewed petition, coupled with the evidence already of record indicates that the requested relief may be accorded. It is noted that one page of the petition as scanned in was entirely black, which may have been the page containing a photograph of the Express Mail pick up time(s) referenced in the petition. The assertion in the petition as to the scheduled pick up time(s) for the date in question is accepted.

This application is being referred to the Office of Initial Patent Examination (OIPE) for correction of the filing date to July 19, 2006. Any queries related to OIPE processing must be referred to their hotline at 571-272-4000.

Telephone inquiries related to this communication should be directed to the undersigned at (571) 272-3217.

Brian Hearn
Petitions Examiner
Office of Petitions

UNITED STATES PATENT AND TRADEMARK OFFICE

UNITED STATES DEPARTMENT OF COMMERCE
United States Patent and Trademark Office
Address: COMMISSIONER FOR PATENTS
P.O. Box 1450
Alexandria, Virginia 22313-1450
www.uspto.gov

JOHN S. BEULICK (17851)
ARMSTRONG TEASDALE LLP
ONE METROPOLITAN SQUARE, SUITE 2600
ST. LOUIS, MO 63102-2740

Mail Date: 04/20/2010

Applicant	: Raymond Billy Williams	: DECISION ON REQUEST FOR
Patent Number	: 7600526	: RECALCULATION of PATENT
Issue Date	: 10/13/2009	: TERM ADJUSTMENT IN VIEW
Appliction No	: 11/489,863	: OF WYETH AND NOTICE OF INTENT TO
Filed	: 07/20/2006	: ISSUE CERTIFICATE OF CORRECTION
		:

The Request for Recalculation is **GRANTED** to the extent indicated.

The patent term adjustment has been determined to be **712** days. The USPTO will *sua sponte* issue a certificate of correction reflecting the amount of PTA days determined by the recalculation.

Prior to the issuance of the certificate of correction, the USPTO will afford patentee an opportunity to be heard and request reconsideration. Accordingly, patentee has **one month or thirty (30) days**, whichever is longer, to file a request for reconsideration of this patent term adjustment calculation. See 35 U.S.C. 154(b)(3)(B)(ii) and 37 CFR 1.322(a)(4). No extensions of time will be granted under 37 CFR 1.136.

Patentee should use document code PET.OP if electronically filing a request for reconsideration of this patent term adjustment calculation. The patentee must also include the information required by 37 CFR 1.705(b)(2) and the fee required by 37 CFR 1.18(e). If patentee does not file a timely request for reconsideration of this patent term adjustment calculation including the information required by 37 CFR 1.705(b)(2) and the fee required by 37 CFR 1.18(e), the USPTO will issue a certificate of correction reflecting the PTA determination noted above.

Patentee should be aware that in order to preserve the right to review in the United States District Court for the District of Columbia of the USPTO patent term adjustment determination, patentee must ensure that he or she also take the steps required under 35 U.S.C. 154(b)(4)(A) in a timely manner. Nothing in the request for recalculation should be construed as providing an alternative time frame for commencing a civil action under 35 U.S.C. 154(b)(4)(A).

Any questions concerning this decision should be directed to the Office of Patent Legal Administration at 571-272-7702.

UNITED STATES PATENT AND TRADEMARK OFFICE

UNITED STATES DEPARTMENT OF COMMERCE
United States Patent and Trademark Office
Address: COMMISSIONER FOR PATENTS
P.O. Box 1450
Alexandria, Virginia 22313-1450
www.uspto.gov

SIDLEY AUSTIN LLP
717 NORTH HARWOOD
SUITE 3400
DALLAS, TX 75201

Mail Date: 04/20/2010

Applicant	: Akihiro Ukai	: DECISION ON REQUEST FOR
Patent Number	: 7600409	: RECALCULATION of PATENT
Issue Date	: 10/13/2009	: TERM ADJUSTMENT IN VIEW
Appliction No	: 11/489,871	: OF WYETH AND NOTICE OF INTENT TO
Filed	: 07/20/2006	: ISSUE CERTIFICATE OF CORRECTION
		:

The Request for Recalculation is **GRANTED** to the extent indicated.

The patent term adjustment has been determined to be **560** days. The USPTO will *sua sponte* issue a certificate of correction reflecting the amount of PTA days determined by the recalculation.

Prior to the issuance of the certificate of correction, the USPTO will afford patentee an opportunity to be heard and request reconsideration. Accordingly, patentee has **one month or thirty (30) days**, whichever is longer, to file a request for reconsideration of this patent term adjustment calculation. See 35 U.S.C. 154(b)(3)(B)(ii) and 37 CFR 1.322(a)(4). No extensions of time will be granted under 37 CFR 1.136.

Patentee should use document code PET.OP if electronically filing a request for reconsideration of this patent term adjustment calculation. The patentee must also include the information required by 37 CFR 1.705(b)(2) and the fee required by 37 CFR 1.18(e). If patentee does not file a timely request for reconsideration of this patent term adjustment calculation including the information required by 37 CFR 1.705(b)(2) and the fee required by 37 CFR 1.18(e), the USPTO will issue a certificate of correction reflecting the PTA determination noted above.

Patentee should be aware that in order to preserve the right to review in the United States District Court for the District of Columbia of the USPTO patent term adjustment determination, patentee must ensure that he or she also take the steps required under 35 U.S.C. 154(b)(4)(A) in a timely manner. Nothing in the request for recalculation should be construed as providing an alternative time frame for commencing a civil action under 35 U.S.C. 154(b)(4)(A).

Any questions concerning this decision should be directed to the Office of Patent Legal Administration at 571-272-7702.

UNITED STATES PATENT AND TRADEMARK OFFICE

UNITED STATES DEPARTMENT OF COMMERCE
United States Patent and Trademark Office
Address: COMMISSIONER FOR PATENTS
P.O. Box 1450
Alexandria, Virginia 22313-1450
www.uspto.gov

APPLICATION NO.	FILING DATE	FIRST NAMED INVENTOR	ATTORNEY DOCKET NO.	CONFIRMATION NO.
11/489,884	07/20/2006	Barrett Alan Trask	200505006-1	3140

7590 04/15/2008

HEWLETT PACKARD COMPANY
P O BOX 272400, 3404 E. HARMONY ROAD
INTELLECTUAL PROPERTY ADMINISTRATION
FORT COLLINS, CO 80527-2400

EXAMINER	
GAFFIN, JEFFREY A	

ART UNIT	PAPER NUMBER
2165	

NOTIFICATION DATE	DELIVERY MODE
04/15/2008	ELECTRONIC

DECISION GRANTING PETITION UNDER 37 CFR 1.138(d)

The declaration of express abandonment is recognized

This is in response to the petition under 37 CFR 1.138(d), requesting for a refund of any previously paid search fee and excess claims fee in the above-identified application.

The petition is granted.

The express abandonment is recognized. Any previously paid search fee and excess claims fee are hereby refunded.

Telephone inquiries should be directed to the Office of Data Management at (571) 272-4200.

Patent Publication Branch
Office of Data Management

Adjustment date: 04/14/2008 DTERRY
07/24/2006 MGEBREM1 00000015 11489884
02 FC:1111 500.00 CR 082025
04 FC:1202 500.00 CR

UNITED STATES PATENT AND TRADEMARK OFFICE

UNITED STATES DEPARTMENT OF COMMERCE
United States Patent and Trademark Office
Address: COMMISSIONER FOR PATENTS
P.O. Box 1450
Alexandria, Virginia 22313-1450
www.uspto.gov

Weaver Austin Villeneuve & Sampson - Yahoo!
P.O. BOX 70250
OAKLAND, CA 94612-0250

Mail Date: 04/20/2010

Applicant	: Pavel Berkhin	: DECISION ON REQUEST FOR
Patent Number	: 7596587	: RECALCULATION of PATENT
Issue Date	: 09/29/2009	: TERM ADJUSTMENT IN VIEW
Appliction No	: 11/489,885	: OF WYETH AND NOTICE OF INTENT TO
Filed	: 07/19/2006	: ISSUE CERTIFICATE OF CORRECTION
		:

The Request for Recalculation is **GRANTED** to the extent indicated.

The patent term adjustment has been determined to be **320** days. The USPTO will *sua sponte* issue a certificate of correction reflecting the amount of PTA days determined by the recalculation.

Prior to the issuance of the certificate of correction, the USPTO will afford patentee an opportunity to be heard and request reconsideration. Accordingly, patentee has **one month or thirty (30) days**, whichever is longer, to file a request for reconsideration of this patent term adjustment calculation. See 35 U.S.C. 154(b)(3)(B)(ii) and 37 CFR 1.322(a)(4). No extensions of time will be granted under 37 CFR 1.136.

Patentee should use document code PET.OP if electronically filing a request for reconsideration of this patent term adjustment calculation. The patentee must also include the information required by 37 CFR 1.705(b)(2) and the fee required by 37 CFR 1.18(e). If patentee does not file a timely request for reconsideration of this patent term adjustment calculation including the information required by 37 CFR 1.705(b)(2) and the fee required by 37 CFR 1.18(e), the USPTO will issue a certificate of correction reflecting the PTA determination noted above.

Patentee should be aware that in order to preserve the right to review in the United States District Court for the District of Columbia of the USPTO patent term adjustment determination, patentee must ensure that he or she also take the steps required under 35 U.S.C. 154(b)(4)(A) in a timely manner. Nothing in the request for recalculation should be construed as providing an alternative time frame for commencing a civil action under 35 U.S.C. 154(b)(4)(A).

Any questions concerning this decision should be directed to the Office of Patent Legal Administration at 571-272-7702.

UNITED STATES PATENT AND TRADEMARK OFFICE

UNITED STATES DEPARTMENT OF COMMERCE
United States Patent and Trademark Office
Address: COMMISSIONER FOR PATENTS
P.O. Box 1450
Alexandria, Virginia 22313-1450
www.uspto.gov

Weaver Austin Villeneuve & Sampson - Yahoo!
P.O. BOX 70250
OAKLAND, CA 94612-0250

Mail Date: 04/20/2010

Applicant	: Pavel Berkhin	: DECISION ON REQUEST FOR
Patent Number	: 7596587	: RECALCULATION of PATENT
Issue Date	: 09/29/2009	: TERM ADJUSTMENT IN VIEW
Appliction No	: 11/489,885	: OF WYETH AND NOTICE OF INTENT TO
Filed	: 07/19/2006	: ISSUE CERTIFICATE OF CORRECTION
		:

The Request for Recalculation is **GRANTED** to the extent indicated.

The patent term adjustment has been determined to be **320** days. The USPTO will *sua sponte* issue a certificate of correction reflecting the amount of PTA days determined by the recalculation.

Prior to the issuance of the certificate of correction, the USPTO will afford patentee an opportunity to be heard and request reconsideration. Accordingly, patentee has **one month or thirty (30) days**, whichever is longer, to file a request for reconsideration of this patent term adjustment calculation. See 35 U.S.C. 154(b)(3)(B)(ii) and 37 CFR 1.322(a)(4). No extensions of time will be granted under 37 CFR 1.136.

Patentee should use document code PET.OP if electronically filing a request for reconsideration of this patent term adjustment calculation. The patentee must also include the information required by 37 CFR 1.705(b)(2) and the fee required by 37 CFR 1.18(e). If patentee does not file a timely request for reconsideration of this patent term adjustment calculation including the information required by 37 CFR 1.705(b)(2) and the fee required by 37 CFR 1.18(e), the USPTO will issue a certificate of correction reflecting the PTA determination noted above.

Patentee should be aware that in order to preserve the right to review in the United States District Court for the District of Columbia of the USPTO patent term adjustment determination, patentee must ensure that he or she also take the steps required under 35 U.S.C. 154(b)(4)(A) in a timely manner. Nothing in the request for recalculation should be construed as providing an alternative time frame for commencing a civil action under 35 U.S.C. 154(b)(4)(A).

Any questions concerning this decision should be directed to the Office of Patent Legal Administration at 571-272-7702.

UNITED STATES PATENT AND TRADEMARK OFFICE

UNITED STATES DEPARTMENT OF COMMERCE
United States Patent and Trademark Office
Address: COMMISSIONER FOR PATENTS
P.O. Box 1450
Alexandria, Virginia 22313-1450
www.uspto.gov

APPLICATION NO.	FILING DATE	FIRST NAMED INVENTOR	ATTORNEY DOCKET NO.	CONFIRMATION NO.
11/489,898	07/20/2006	Roberto Casini		3142

7590 01/13/2009

R.RUSCHENA PATENT AGENT, LLC
SUITE 600
8400 E. CRESCENT PARKWY
GREENWOOD VILLAGE, CO 80111

EXAMINER	
O HERN, BRENT T	

ART UNIT	PAPER NUMBER
1794	

MAIL DATE	DELIVERY MODE
01/13/2009	PAPER

DECISION DISMISSING PETITION UNDER 37 CFR 1.138(d)

The declaration of express abandonment will not be recognized

This is in response to the petition under 37 CFR 1.138(d), requesting for a refund of any previously paid search fee and excess claims fee in the above-identified application.

The petition is dismissed.

The express abandonment will **not** be recognized for the reason(s) indicated below:

1. ☑ The petition was not filed in sufficient time to permit the appropriate officials to recognize the abandonment before an examination has been made of the application. See 37 CFR 1.138(d).

2. ☐ The petition was not signed by a party authorized by 37 CFR 1.33(b)(1), (3) or (4).

3. ☐ The application is not an application filed under 35 U.S.C. 111(a) on or after December 8, 2004.

4. ☐ The petition for express abandonment under 1.138(d) is dismissed because the applicant did not pay any search fee and excess claims fees in the above-identified application.

Telephone inquiries should be directed to the Office of Data Management at (571) 272-4200.

Nimi Farmer

Patent Publication Branch
Office of Data Management

UNITED STATES PATENT AND TRADEMARK OFFICE

UNITED STATES DEPARTMENT OF COMMERCE
United States Patent and Trademark Office
Address: COMMISSIONER FOR PATENTS
P.O. Box 1450
Alexandria, Virginia 22313-1450
www.uspto.gov

LEFFERT JAY & POLGLAZE, P.A.
P.O. BOX 581009
MINNEAPOLIS, MN 55458-1009

Mail Date: 04/20/2010

Applicant	: Luca De Santis	: DECISION ON REQUEST FOR
Patent Number	: 7587560	: RECALCULATION of PATENT
Issue Date	: 09/08/2009	: TERM ADJUSTMENT IN VIEW
Appliction No	: 11/489,904	: OF WYETH AND NOTICE OF INTENT TO
Filed	: 07/20/2006	: ISSUE CERTIFICATE OF CORRECTION
		:

The Request for Recalculation is **GRANTED** to the extent indicated.

The patent term adjustment has been determined to be **443** days. The USPTO will *sua sponte* issue a certificate of correction reflecting the amount of PTA days determined by the recalculation.

Prior to the issuance of the certificate of correction, the USPTO will afford patentee an opportunity to be heard and request reconsideration. Accordingly, patentee has **one month or thirty (30) days**, whichever is longer, to file a request for reconsideration of this patent term adjustment calculation. See 35 U.S.C. 154(b)(3)(B)(ii) and 37 CFR 1.322(a)(4). No extensions of time will be granted under 37 CFR 1.136.

Patentee should use document code PET.OP if electronically filing a request for reconsideration of this patent term adjustment calculation. The patentee must also include the information required by 37 CFR 1.705(b)(2) and the fee required by 37 CFR 1.18(e). If patentee does not file a timely request for reconsideration of this patent term adjustment calculation including the information required by 37 CFR 1.705(b)(2) and the fee required by 37 CFR 1.18(e), the USPTO will issue a certificate of correction reflecting the PTA determination noted above.

Patentee should be aware that in order to preserve the right to review in the United States District Court for the District of Columbia of the USPTO patent term adjustment determination, patentee must ensure that he or she also take the steps required under 35 U.S.C. 154(b)(4)(A) in a timely manner. Nothing in the request for recalculation should be construed as providing an alternative time frame for commencing a civil action under 35 U.S.C. 154(b)(4)(A).

Any questions concerning this decision should be directed to the Office of Patent Legal Administration at 571-272-7702.

UNITED STATES PATENT AND TRADEMARK OFFICE

Commissioner for Patents
United States Patent and Trademark Office
P.O. Box 1450
Alexandria, VA 22313-1450
www.uspto.gov

AGENSYS C/O MORRISON & FOERSTER LLP
12531 HIGH BLUFF DRIVE
SUITE 100
SAN DIEGO, CA 92130-2040

COPY MAILED

JUN 2 7 2008

OFFICE OF PETITIONS

In re Application of Raitano et al. :
Application No. 11/489,907 : Decision on Petition
Filing Date: July 19, 2006 :
Attorney Docket No. 511582002801 :

This is a decision in response to the petition titled "PETITION UNDER RULE 1.47(a)" filed March 25, 2008, which is being treated as a petition under 37 CFR 1.183 requesting waiver of the requirement in 37 CFR 1.131 that all the inventors sign the declaration of prior inventorship.

The petition is **granted**.

The instant application is a continuation of Application No. 09/942,052.

The instant petition is, in essence, simply a copy of a petition filed in Application No. 09/942,052.

The petition titled "PETITION UNDER RULE 1.47(a)" filed in Application No. 09/942,052, was treated as a petition under 37 CFR 1.183 requesting waiver of the requirement in 37 CFR 1.131 that all the inventors sign the declaration of prior inventorship.

A decision granting the petition was mailed April 29, 2005. The declaration was accepted with the signatures of only six of the seven inventors.

Petitioner now seeks to have the declaration under 37 CFR 1.181 accepted in the instant application without the signature of all of the inventors.

The instant petition will be treated as a petition under 37 CFR 1.183 requesting waiver of the requirement in 37 CFR 1.131 that all the inventors sign the declaration of prior inventorship.

A review of the record indicates petitioner has demonstrated that this is an extraordinary situation warranting waiver of the requirement for all the inventors to sign the declaration under 37 CFR 1.131.

The petition is granted to the extent that the 37 CFR 1.131 declaration may be entered, despite the fact the requirement that all of the inventors sign the declaration has not been met. This is not a decision on the merits of the declaration.

Petitioner submitted $200 for the petition fee. The petition fee for a petition under 37 CFR 1.183 is $400. Therefore, an additional $200 has been charged to petitioner's deposit account.

Technology Center Art Unit 1643 will be informed of the instant decision and the examiner will review the papers filed March 25, 2008, and June 23, 2008, in due course.

Telephone inquiries regarding this communication should be directed to Petitions Attorney Steven Brantley at (571) 272-3203.

Charles Steven Brantley
Senior Petitions Attorney
Office of Petitions

UNITED STATES PATENT AND TRADEMARK OFFICE

UNITED STATES DEPARTMENT OF COMMERCE
United States Patent and Trademark Office
Address: COMMISSIONER FOR PATENTS
P.O. Box 1450
Alexandria, Virginia 22313-1450
www.uspto.gov

BRINKS HOFER GILSON & LIONE/UTAH
UTAH OFFICE
222 South Main Street
Suite 1930
SALT LAKE CITY, UT 84101

Mail Date: 04/21/2010

Applicant	: Griffith D. Neal	: DECISION ON REQUEST FOR
Patent Number	: 7629716	: RECALCULATION of PATENT
Issue Date	: 12/08/2009	: TERM ADJUSTMENT IN VIEW
Appliction No	: 11/489,913	: OF WYETH AND NOTICE OF INTENT TO
Filed	: 07/19/2006	: ISSUE CERTIFICATE OF CORRECTION
		:

The Request for Recalculation is **GRANTED** to the extent indicated.

The patent term adjustment has been determined to be **468** days. The USPTO will *sua sponte* issue a certificate of correction reflecting the amount of PTA days determined by the recalculation.

Prior to the issuance of the certificate of correction, the USPTO will afford patentee an opportunity to be heard and request reconsideration. Accordingly, patentee has **one month or thirty (30) days**, whichever is longer, to file a request for reconsideration of this patent term adjustment calculation. See 35 U.S.C. 154(b)(3)(B)(ii) and 37 CFR 1.322(a)(4). No extensions of time will be granted under 37 CFR 1.136.

Patentee should use document code PET.OP if electronically filing a request for reconsideration of this patent term adjustment calculation. The patentee must also include the information required by 37 CFR 1.705(b)(2) and the fee required by 37 CFR 1.18(e). If patentee does not file a timely request for reconsideration of this patent term adjustment calculation including the information required by 37 CFR 1.705(b)(2) and the fee required by 37 CFR 1.18(e), the USPTO will issue a certificate of correction reflecting the PTA determination noted above.

Patentee should be aware that in order to preserve the right to review in the United States District Court for the District of Columbia of the USPTO patent term adjustment determination, patentee must ensure that he or she also take the steps required under 35 U.S.C. 154(b)(4)(A) in a timely manner. Nothing in the request for recalculation should be construed as providing an alternative time frame for commencing a civil action under 35 U.S.C. 154(b)(4)(A).

Any questions concerning this decision should be directed to the Office of Patent Legal Administration at 571-272-7702.

UNITED STATES PATENT AND TRADEMARK OFFICE

UNITED STATES DEPARTMENT OF COMMERCE
United States Patent and Trademark Office
Address: COMMISSIONER FOR PATENTS
P.O. Box 1450
Alexandria, Virginia 22313-1450
www.uspto.gov

FENWICK & WEST LLP
SILICON VALLEY CENTER
801 CALIFORNIA STREET
MOUNTAIN VIEW, CA 94041

Mail Date: 04/21/2010

Applicant	: Mohan Maturi	: DECISION ON REQUEST FOR
Patent Number	: 7587513	: RECALCULATION of PATENT
Issue Date	: 09/08/2009	: TERM ADJUSTMENT IN VIEW
Appliction No	: 11/489,915	: OF WYETH AND NOTICE OF INTENT TO
Filed	: 07/19/2006	: ISSUE CERTIFICATE OF CORRECTION
		:

The Request for Recalculation is **GRANTED** to the extent indicated.

The patent term adjustment has been determined to be **505** days. The USPTO will *sua sponte* issue a certificate of correction reflecting the amount of PTA days determined by the recalculation.

Prior to the issuance of the certificate of correction, the USPTO will afford patentee an opportunity to be heard and request reconsideration. Accordingly, patentee has **one month or thirty (30) days**, whichever is longer, to file a request for reconsideration of this patent term adjustment calculation. See 35 U.S.C. 154(b)(3)(B)(ii) and 37 CFR 1.322(a)(4). No extensions of time will be granted under 37 CFR 1.136.

Patentee should use document code PET.OP if electronically filing a request for reconsideration of this patent term adjustment calculation. The patentee must also include the information required by 37 CFR 1.705(b)(2) and the fee required by 37 CFR 1.18(e). If patentee does not file a timely request for reconsideration of this patent term adjustment calculation including the information required by 37 CFR 1.705(b)(2) and the fee required by 37 CFR 1.18(e), the USPTO will issue a certificate of correction reflecting the PTA determination noted above.

Patentee should be aware that in order to preserve the right to review in the United States District Court for the District of Columbia of the USPTO patent term adjustment determination, patentee must ensure that he or she also take the steps required under 35 U.S.C. 154(b)(4)(A) in a timely manner. Nothing in the request for recalculation should be construed as providing an alternative time frame for commencing a civil action under 35 U.S.C. 154(b)(4)(A).

Any questions concerning this decision should be directed to the Office of Patent Legal Administration at 571-272-7702.

UNITED STATES PATENT AND TRADEMARK OFFICE

UNITED STATES DEPARTMENT OF COMMERCE
United States Patent and Trademark Office
Address: COMMISSIONER FOR PATENTS
P.O. Box 1450
Alexandria, Virginia 22313-1450
www.uspto.gov

BROOKS KUSHMAN P.C.
1000 TOWN CENTER
TWENTY-SECOND FLOOR
SOUTHFIELD, MI 48075

Mail Date: 04/21/2010

Applicant	: Jeffrey R. Baker	: DECISION ON REQUEST FOR
Patent Number	: 7573464	: RECALCULATION of PATENT
Issue Date	: 08/11/2009	: TERM ADJUSTMENT IN VIEW
Appliction No	: 11/489,922	: OF WYETH
Filed	: 07/20/2006	:
		:

The Patentee's Request for Recalculation is **DISMISSED.**

This Request is deemed ineligible for consideration for one or more of the following reasons:

(A). The patent for which PTA recalculation is requested is either a design or reissue application or is a reexamination proceeding;

(B). The patent for which PTA recalculation is requested resulted from a utility or plant application filed under 35 USC 111(a) before May 29, 2000 and no CPA filed in the application on/after May 29, 2000;

(C). The patent for which PTA recalculation is requested resulted from an international application in which the international filing date was before May 29, 2000 and no CPA filed in the application on/after May 29, 2000;

(D). The patent for which PTA recalculation is requested issued on/after March 2, 2010;

(E). The Request for Recalculation was filed more than 180 days after the grant date of the patent and the request was not filed within two months of a dismissal of a request for reconsideration of the of the patent term under 37 CFR 1.705(d);

(F). The Request for Recalculation is not solely limited to USPTO pre-Wyeth interpretation of 35 U.S.C. 154(b)(2)(A);

or

(G). A civil action was filed pursuant to 35 U.S.C. 154(b)(4)(A)concerning the same patent at issue in this request.

Patentee may file a reply to this decision dismissing the Request for Recalculation. Patentee must file such reply within one month or thirty days, whichever is longer, of the mail date of the decision dismissing the Request for Recalculation. No fee is required if patentee is asserting in the reply that the dismissal for ineligibility is improper.

Patentee should use document code PET.OP if electronically filing a reply to this dismissal. If the USPTO finds that the request was improperly deemed ineligible, the USPTO will mail applicant a recalculation determination.

Patentee should be aware that in order to preserve the right to review in the United States District Court for the District of Columbia of the USPTO patent term adjustment determination, patentee must ensure that he or she also take the steps required under 35 U.S.C. 154(b)(4)(A). Nothing in the request for recalculation should be construed as providing an alternative time frame for commencing a civil action under 35 U.S.C. 154 (b)(4)(A).

Any questions concerning this decision should be directed to the Office of Patent Legal Administration at 571-272-7702.

UNITED STATES PATENT AND TRADEMARK OFFICE

UNITED STATES DEPARTMENT OF COMMERCE
United States Patent and Trademark Office
Address: COMMISSIONER FOR PATENTS
P.O. Box 1450
Alexandria, Virginia 22313-1450
www.uspto.gov

BROOKS KUSHMAN P.C.
1000 TOWN CENTER
TWENTY-SECOND FLOOR
SOUTHFIELD, MI 48075

Mail Date: 05/18/2010

Applicant : Jeffrey R. Baker
Patent Number : 7573464
Issue Date : 08/11/2009
Application No: 11/489,922
Filed : 07/20/2006

: NOTICE CONCERNING IMPROPER
: DISMISSAL OF THE REQUEST
: FOR RECALCULATION OF
: PATENT TERM ADJUSTMENT
: IN VIEW OF WYETH

The United States Patent and Trademark Office (USPTO) discovered that in processing the recent recalculation decisions mailed in response to patentee's filed Request for Recalculation of Patent Term Adjustment in view of Wyeth, the USPTO mistakenly dismissed a small number of requests as ineligible. The dismissals involve requests that were filed on February 9-12, 2010, for patents that were granted on August 11, 2009. Any request that was filed on February 8, 2010 was properly deemed eligible for patent term adjustment (PTA) and was recalculated.

Patents meeting the above criteria were eligible because the USPTO was closed February 8-11, 2010, due to a snowstorm. See Closing of the United States Patent and Trademark Office from Monday February, 8, 2010, through Thursday, February 11, 2010, 1352 *Off. Gaz. Pat. Office* 146 (March 16, 2010). The Office considered each day from Monday, February 8, 2010, through Thursday, February 11, 2010, to be a "Federal holiday within the District of Columbia" under 35 U.S.C. § 21(b) and 37 CFR 1.6, 1.7, 1.9, 2.2(d), 2.195 and 2.196. Any actions that were due from Monday, February, 8, 2010, through Thursday, February 11, 2010, (or the preceding Saturday (February 6, 2010) or Sunday (February 7, 2010)) will be considered timely if the action was taken on the next succeeding business day on which the USPTO was open, which was February 12, 2010.

This notice **VACATES** the previous mailed decision in the patented file that deemed patentee ineligible for the request for recalculation. Patentee's request for recalculation is GRANTED.

The patent term adjustment has been determined to be **583** days. The USPTO will *sua sponte* issue a certificate of correction reflecting the amount of PTA days determined by the recalculation.

Prior to the issuance of the certificate of correction, the USPTO will afford patentee an opportunity to be heard and request reconsideration. Accordingly, patentee has **one month or thirty (30) days** from the mail date of this notice, whichever is longer, to file a request for reconsideration of this PTA calculation. See 35 U.S.C. § 154(b)(3)(B)(ii) and 37 CFR 1.322(a)(4).

Patentee should use document code PET.OP if electronically filing a request for reconsideration of this PTA calculation. The patentee must also include the information required by 37 CFR 1.705(b)(2) and the fee required by 37 CFR 1.18(e). If patentee does not file a timely request for reconsideration of this PTA calculation, including the information required by 37 CFR 1.705(b)(2) and the fee required by 37 1.18(e), the USPTO will issue a certificate of correction reflecting the PTA determination noted above.

Patentee should be aware that in order to preserve the right of review of the USPTO's PTA deterimation in the United States District Court for the District of Columbia, patentee must ensure that the steps required under 35 U.S.C. § 154(b)(4) are taken in a timely manner. Nothing in the request for recalculation should be construed as providing an alternative time frame for commencing a civil action under 35 U.S.C. § 154(b)(4).

UNITED STATES PATENT AND TRADEMARK OFFICE

UNITED STATES DEPARTMENT OF COMMERCE
United States Patent and Trademark Office
Address: COMMISSIONER FOR PATENTS
P.O. Box 1450
Alexandria, Virginia 22313-1450
www.uspto.gov

FULWIDER PATTON LLP
HOWARD HUGHES CENTER
6060 CENTER DRIVE, TENTH FLOOR
LOS ANGELES, CA 90045

Mail Date: 04/22/2010

Applicant	: Robert Frederick Frampton	: DECISION ON REQUEST FOR
Patent Number	: 7604019	: RECALCULATION of PATENT
Issue Date	: 10/20/2009	: TERM ADJUSTMENT IN VIEW
Appliction No	: 11/489,935	: OF WYETH AND NOTICE OF INTENT TO
Filed	: 07/20/2006	: ISSUE CERTIFICATE OF CORRECTION
		:

The Request for Recalculation is **GRANTED** to the extent indicated.

The patent term adjustment has been determined to be **572** days. The USPTO will *sua sponte* issue a certificate of correction reflecting the amount of PTA days determined by the recalculation.

Prior to the issuance of the certificate of correction, the USPTO will afford patentee an opportunity to be heard and request reconsideration. Accordingly, patentee has **one month or thirty (30) days**, whichever is longer, to file a request for reconsideration of this patent term adjustment calculation. See 35 U.S.C. 154(b)(3)(B)(ii) and 37 CFR 1.322(a)(4). No extensions of time will be granted under 37 CFR 1.136.

Patentee should use document code PET.OP if electronically filing a request for reconsideration of this patent term adjustment calculation. The patentee must also include the information required by 37 CFR 1.705(b)(2) and the fee required by 37 CFR 1.18(e). If patentee does not file a timely request for reconsideration of this patent term adjustment calculation including the information required by 37 CFR 1.705(b)(2) and the fee required by 37 CFR 1.18(e), the USPTO will issue a certificate of correction reflecting the PTA determination noted above.

Patentee should be aware that in order to preserve the right to review in the United States District Court for the District of Columbia of the USPTO patent term adjustment determination, patentee must ensure that he or she also take the steps required under 35 U.S.C. 154(b)(4)(A) in a timely manner. Nothing in the request for recalculation should be construed as providing an alternative time frame for commencing a civil action under 35 U.S.C. 154(b)(4)(A).

Any questions concerning this decision should be directed to the Office of Patent Legal Administration at 571-272-7702.

UNITED STATES PATENT AND TRADEMARK OFFICE

Commissioner for Patents
United States Patent and Trademark Office
P.O. Box 1450
Alexandria, VA 22313-1450
www.uspto.gov

VERTEX PHARMACEUTICALS INC.
130 WAVERLY STREET
CAMBRIDGE MA 02139-4242

MAILED

APR 12 2010

OFFICE OF PETITIONS

In re Application of	:	
Steven Durrant, et al.	:	
Application No. 11/489,939	:	DECISION ON PETITION
Filed: July 20, 2006	:	
Attorney Docket No. VPI/04-133 US	:	

This is a decision on the petition under the unintentional provisions of 37 CFR 1.137(b), filed January 20, 2010, to revive the above-identified application.

The petition is **GRANTED**.

The application became abandoned for failure to reply in a timely manner to the non-final Office action mailed, May 8, 2009, which set a shortened statutory period for reply of three (3) months. No extensions of time under the provisions of 37 CFR 1.136(a) were obtained. Accordingly, the application became abandoned on August 9, 2009. The Notice of Abandonment was mailed December 14, 2009.

The petition satisfies the requirements of 37 CFR 1.137(b) in that petitioner has supplied (1) the reply in the form of an amendment, (2) the petition fee of $1,620, and (3) a proper statement of unintentional delay.

Telephone inquiries concerning this decision should be directed to Terri Johnson at (571) 272-2991.

This application is being referred to Technology Center AU 1626 for appropriate action by the Examiner in the normal course of business on the reply received.

Terri Johnson
Petitions Examiner
Office of Petitions

UNITED STATES PATENT AND TRADEMARK OFFICE

Commissioner for Patents
United States Patent and Trademark Office
P.O. Box 1450
Alexandria, VA 22313-1450
www.uspto.gov
DTW Dec-09

COHEN, PONTANI, LIEBERMAN & PAVANE LLP
551 FIFTH AVENUE
SUITE 1210
NEW YORK NY 10176

COPY MAILED

DEC 10 2009

OFFICE OF PETITIONS

In re Application of :
Shigeaki Tomita :
Application Number: 11/489976 : ON PETITION
Filing Date: 07/20/2006 :
Attorney Docket Number: 5354-10 :
:

This is a decision on the petition, filed on October 8, 2009, to withdraw the holding of abandonment.

This application was held abandoned for failure to timely file a reply to the Notice of Allowance and Fee(s) Due mailed on June 11, 2009, which set a three (3)-month statutory period for reply. Notice of Abandonment was mailed on October 2, 2009. On October 8, 2009, the subject petition was filed.

In the subject petition, petitioners request that the Office withdraw the holding of abandonment due to non-receipt of the Notice of Allowance mailed on June 11, 2009.

A review of the record indicates no irregularity in the mailing of the Notice of Allowance and Fee(s) Due mailed on June 11, 2009, and in the absence of any irregularity in the mailing, there is a strong presumption that the Notice of Allowance and Fee(s) Due mailed on June 11, 2009, was properly mailed to the address of record. This presumption may be overcome by a showing that the Notice of Allowance and Fee(s) Due mailed on June 11, 2009 was not in fact received.

MPEP 711.03(c) states, in pertinent part:

> In Delgar v. Schulyer, 172 USPQ 513 (D.D.C. 1971), the court decided that the Office should mail a new Notice of Allowance in view of the evidence presented in support of the contention that the applicant's representative did not receive the original Notice of

Allowance. Under the reasoning of Delgar, an allegation that an Office action was never received may be considered in a petition to withdraw the holding of abandonment. If adequately supported, the Office may grant the petition to withdraw the holding of abandonment and remail the Office action. That is, the reasoning of Delgar is applicable regardless of whether an application is held abandoned for failure to timely pay the issue fee (35 U.S.C. 151) or for failure to prosecute (35 U.S.C. 133).

To minimize costs and burdens to practitioners and the Office, the Office has modified the showing required to establish nonreceipt of an Office action. The showing required to establish nonreceipt of an Office communication must include a statement from the practitioner describing the system used for recording an Office action received at the correspondence address of record with the USPTO. The statement should establish that the docketing system is sufficiently reliable. It is expected that the record would include, but not be limited to, the application number, attorney docket number, the mail date of the Office action and the due date for the response.

Practitioner must state that the Office action was not received at the correspondence address of record, and that a search of the practitioner's record(s), including any file jacket or the equivalent, and the application contents, indicates that the Office action was not received. A copy of the record(s) used by the practitioner where the non-received Office action would have been entered had it been received is required.

A copy of the practitioner's record(s) required to show non-receipt of the Office action should include the master docket for the firm. That is, if a three month period for reply was set in the nonreceived Office action, a copy of the master docket report showing all replies docketed for a date three months from the mail date of the nonreceived Office action must be submitted as documentary proof of nonreceipt of the Office action. If no such master docket exists, the practitioner should so state and provide other evidence such as, but not limited to, the following: the application file jacket; incoming mail log; calendar;

reminder system; or the individual docket record for the application in question.

Petitioners' counsel, registered patent practitioner Alfred W. Froebich, states that a search of the file jacket and the docket records in counsel's Office was performed, and that the search indicated that the June 11, 2009 Notice of Allowance was not received. Counsel has supplied a copy of the file jacket, the office's official journal, counsel's electronic docketing records, as well as the office's docket for all items having a due date of September 11, 2009.

Accordingly, petitioners have provided an adequate showing that the Notice of Allowance and Fee(s) Due mailed on June 11, 2009 was never received.

Therefore, there is no abandonment in fact. The Notice of Abandonment is hereby vacated, and the holding of abandonment withdrawn.

The petition is **GRANTED.**

The application is being referred to Technology Center Art Unit 2873 for remailing of the Notice of Allowance and Fee(s) Due mailed on June 11, 2009. The period for reply will be reset from the mailing date thereof.

Telephone inquiries concerning this matter may be directed to the undersigned at (571)272-3231.

D Wood

Douglas I. Wood
Senior Petitions Attorney
Office of Petitions

UNITED STATES PATENT AND TRADEMARK OFFICE

Commissioner for Patents
United States Patent and Trademark Office
P. O. Box 1450
Alexandria, VA 22313-1450
www.uspto.gov

OLIFF & BERRIDGE, PLC
P.O. BOX 320850
ALEXANDRIA, VA 22320-4850

MAILED

APR 05 2010

OFFICE OF PETITIONS

In re Application of :
Masaaki Suwabe :
Application No. 11/490,062 : ON PETITION
Filed: July 21, 2006 :
Attorney Docket No. 128806

This is a decision on the petition, filed April 2, 2010 under 37 CFR 1.313(c)(2) to withdraw the above-identified application from issue after payment of the issue fee.

The petition is **GRANTED**.

The above-identified application is withdrawn from issue for consideration of a submission under 37 CFR 1.114 (request for continued examination). See 37 CFR 1.313(c)(2).

Petitioner is advised that the issue fee paid on February 23, 2010 in the above-identified application cannot be refunded. If, however, the above-identified application is again allowed, petitioner may request that it be applied towards the issue fee required by the new Notice of Allowance.[1]

Telephone inquiries should be directed to Irvin Dingle at (571) 272-3210.

This matter is being referred to Technology Center AU 1795 for processing of the request for continued examination under 37 CFR 1.114 and for consideration of the concurrently filed Information Disclosure Statement.

/Irvin Dingle/
Irvin Dingle
Petitions Examiner
Office of Petitions

[1] The request to apply the issue fee to the new Notice may be satisfied by completing and returning the new Issue Fee Transmittal Form PTOL-85(b), which includes the following language thereon: Commissioner for Patents is requested to apply the Issue Fee and Publication Fee (if any) or re-apply any previously paid issue fee to the application identified above. Petitioner is advised that, whether a fee is indicated as being due or not, the Issue Fee Transmittal Form **must** be completed and timely submitted to avoid abandonment. Note the language in bold text on the first page of the Notice of Allowance and Fee(s) Due (PTOL-85).

UNITED STATES PATENT AND TRADEMARK OFFICE

UNITED STATES DEPARTMENT OF COMMERCE
United States Patent and Trademark Office
Address: COMMISSIONER FOR PATENTS
P.O. Box 1450
Alexandria, Virginia 22313-1450
www.uspto.gov

YOUNG & THOMPSON
209 Madison Street
Suite 500
Alexandria, VA 22314

Mail Date: 04/20/2010

Applicant	: Natsuki Sato	: DECISION ON REQUEST FOR
Patent Number	: 7589344	: RECALCULATION of PATENT
Issue Date	: 09/15/2009	: TERM ADJUSTMENT IN VIEW
Appliction No	: 11/490,073	: OF WYETH AND NOTICE OF INTENT TO
Filed	: 07/21/2006	: ISSUE CERTIFICATE OF CORRECTION
		:

The Request for Recalculation is **GRANTED** to the extent indicated.

The patent term adjustment has been determined to be **125** days. The USPTO will *sua sponte* issue a certificate of correction reflecting the amount of PTA days determined by the recalculation.

Prior to the issuance of the certificate of correction, the USPTO will afford patentee an opportunity to be heard and request reconsideration. Accordingly, patentee has **one month or thirty (30) days**, whichever is longer, to file a request for reconsideration of this patent term adjustment calculation. See 35 U.S.C. 154(b)(3)(B)(ii) and 37 CFR 1.322(a)(4). No extensions of time will be granted under 37 CFR 1.136.

Patentee should use document code PET.OP if electronically filing a request for reconsideration of this patent term adjustment calculation. The patentee must also include the information required by 37 CFR 1.705(b)(2) and the fee required by 37 CFR 1.18(e). If patentee does not file a timely request for reconsideration of this patent term adjustment calculation including the information required by 37 CFR 1.705(b)(2) and the fee required by 37 CFR 1.18(e), the USPTO will issue a certificate of correction reflecting the PTA determination noted above.

Patentee should be aware that in order to preserve the right to review in the United States District Court for the District of Columbia of the USPTO patent term adjustment determination, patentee must ensure that he or she also take the steps required under 35 U.S.C. 154(b)(4)(A) in a timely manner. Nothing in the request for recalculation should be construed as providing an alternative time frame for commencing a civil action under 35 U.S.C. 154(b)(4)(A).

Any questions concerning this decision should be directed to the Office of Patent Legal Administration at 571-272-7702.

UNITED STATES PATENT AND TRADEMARK OFFICE

Commissioner for Patents
United States Patent and Trademark Office
P.O. Box 1450
Alexandria, VA 22313-1450
www.uspto.gov

PERKINS COIE LLP
POST OFFICE BOX 1208
SEATTLE WA 98111-1208

MAILED

FEB 17 2010

OFFICE OF PETITIONS

In re Patent No. 7,315,487 :
Issue Date: January 1, 2008 :
Application No. 11/490,078 : DECISION ON PETITION
Filed: July 21, 2006 :
Attorney Docket No. **63795.8014.US00** :

This is a decision on the petition August 11, 2009, requesting issuance of a duplicate Letters Patent for the above-identified patent that is being considered under 37 CFR 1.182.

The petition under 37 CFR 1.182 is **GRANTED**.

The Office of Data Management is directed to issue duplicate Letters Patent.

As authorized, the $400 fee for the petition under 37 CFR 1.182 has been assessed to petitioner's deposit account.

A copy of this decision is being forwarded to the Office of Data Management for issuance of the duplicate Letters Patent.

Any questions concerning this matter may be directed to the undersigned at (571) 272-4584. Any questions concerning issuance of the duplicate Letters Patent should be directed to Niomi Farmer at (703)756-1556.

JoAnne Burke
Petitions Examiner
Office of Petitions

cc: Niomi Farmer, P/ODM, Randolph Square Building, 9th Floor, 09/D30-B
FAX No. (571) 270-9753

UNITED STATES PATENT AND TRADEMARK OFFICE

UNITED STATES DEPARTMENT OF COMMERCE
United States Patent and Trademark Office
Address: COMMISSIONER FOR PATENTS
P.O. Box 1450
Alexandria, Virginia 22313-1450
www.uspto.gov

YOUNG & THOMPSON
209 Madison Street
Suite 500
Alexandria, VA 22314

Mail Date: 06/15/2010

Applicant	: Koujirou Matsui	: DECISION ON REQUEST FOR
Patent Number	: 7633126	: RECALCULATION of PATENT
Issue Date	: 12/15/2009	: TERM ADJUSTMENT IN VIEW
Application No	: 11/490,081	: OF WYETH AND NOTICE OF INTENT TO
Filed	: 07/21/2006	: ISSUE CERTIFICATE OF CORRECTION
		:

The Request for Recalculation is **GRANTED** to the extent indicated.

The patent term adjustment has been determined to be **481** days. The USPTO will *sua sponte* issue a certificate of correction reflecting the amount of PTA days determined by the recalculation.

Prior to the issuance of the certificate of correction, the USPTO will afford patentee an opportunity to be heard and request reconsideration. Accordingly, patentee has **one month or thirty (30) days**, whichever is longer, to file a request for reconsideration of this patent term adjustment calculation. See 35 U.S.C. 154(b)(3)(B)(ii) and 37 CFR 1.322(a)(4). No extensions of time will be granted under 37 CFR 1.136.

Patentee should use document code PET.OP if electronically filing a request for reconsideration of this patent term adjustment calculation. The patentee must also include the information required by 37 CFR 1.705(b)(2) and the fee required by 37 CFR 1.18(e). If patentee does not file a timely request for reconsideration of this patent term adjustment calculation including the information required by 37 CFR 1.705(b)(2) and the fee required by 37 CFR 1.18(e), the USPTO will issue a certificate of correction reflecting the PTA determination noted above.

Patentee should be aware that in order to preserve the right to review in the United States District Court for the District of Columbia of the USPTO patent term adjustment determination, patentee must ensure that he or she also take the steps required under 35 U.S.C. 154(b)(4)(A) in a timely manner. Nothing in the request for recalculation should be construed as providing an alternative time frame for commencing a civil action under 35 U.S.C. 154(b)(4)(A).

Any questions concerning this decision should be directed to the Office of Patent Legal Administration at 571-272-7702.

19 MAR 2004

UNITED STATES PATENT AND TRADEMARK OFFICE

JWF

COMMISSIONER FOR PATENTS
UNITED STATES PATENT AND TRADEMARK OFFICE
P.O. BOX 1450
ALEXANDRIA, VA 22313-1450
www.uspto.gov

RECEIVED
MAR 23 2004

OLIFF & BERRIDGE
P.O. BOX 19928
ALEXANDRIA, VA 22320

In re Application of HOLMES et al.
Application No.: 10/415,903
PCT No.: PCT/GB01/05538
Int. Filing: 14 December 2001
Priority Date: 15 December 2000
Attorney Docket No.: 115862
For: DIFFUSE REFLECTOR AND METHOD

: DECISION ON PETITION
: UNDER 37 CFR 1.47(a)

This is a decision on applicant's petition under 37 CFR 1.47(a) filed in the United States Patent and Trademark Office (USPTO) on 01 December 2003. Applicant also requests a one month extension of time, which is granted.

BACKGROUND

On 05 May 2003, within thirty months of the priority date, applicant filed a transmittal letter (PTO-1390) requesting entry into the national stage in the United States of America under 35 U.S.C. § 371. Filed with the Transmittal Letter was, *inter alia*, the requisite basic national fee.

On 29 August 2003, a Notification of Missing Requirements was mailed to applicant indicating that an oath or declaration, in compliance with 37 CFR 1.497(a) & (b), and the surcharge for filing the oath or declaration after the thirty month period, was required.

On 01 December 2003, applicant filed a petition under 37 CFR 1.47(a) in an attempt to satisfy the requirements of 35 U.S.C. 371(c)(4). The petition requested the acceptance of the application without the signature of inventor Kenneth John Drinkwater. Applicant alleges that the inventor refuses to sign the application. The petition included the requisite petition fee, a declaration signed by the joint inventor Brian William Holmes on behalf of Kenneth John Drinkwater and a statement of facts under 37 CFR 1.47(a).

DISCUSSION

A petition under 37 CFR §1.47(a) must be accompanied by (1) the fee under 37 CFR §1.17(h), (2) factual proof that the non-signing joint inventor(s) refuses to execute the application or cannot be reached after diligent effort, (3) a statement of the last known address of the non-signing inventor(s), and (4) an oath or declaration by each available joint inventor on his or her own behalf and on behalf of the non-signing joint inventor(s).

Item (1) is satisfied with the payment of the $130 petition fee. Item (3) is satisfied because the last known address for non-signing inventor was provided. With regard to item (4), the declaration was executed by the available joint inventor on his behalf and on behalf of the non-signing inventor and satisfies the requirement of 37 CFR 1.47(a).

With respect to item (2), applicant's Statement of Facts Supporting Petition under 37 CFR 1.47(a) in support of applicant's allegation that inventor Drinkwater refuses to sign the application was submitted by Derek M. Wallace, Group Patent and Trademark Manager for De

La Rue, PLC. Based upon his first hand knowledge, Mr. Wallace attests that "On July 9, 2003, I sent a letter by mail to Dr. Drinkwater that included a copy of the patent application as filed in the United States, Declaration and Power of Attorney executed by the co-inventor Dr. Brian HOLMES, and an Assignment....sent to Dr. Drinkwater's last known address." (Wallace Decl., ¶4). Mr. Wallace also attests that "In reply to the July 9 letter, I received a note from Dr. Drinkwater on August 11, 2003 suggesting that Dr. Drinkwater believed he may not be an inventor of the subject matter of the above-identified patent application.(Wallace Decl., ¶5)... On September 10, 2003, I sent a registered letter to Dr. Drinkwater providing a detailed explanation of the reasons why Dr. Drinkwater is considered to be an inventor of the above-identified patent application...sent to Dr. Drinkwater's last known address."(Wallace Decl., ¶6). Mr. Wallace further states that a reply was not received to his September 10th communication; thus, on October 14, 2003, he forwarded that communication to Dr. Drinkwater at his business address, which was signed for. Mr. Wallace states that to date, Dr. Drinkwater has neither telephoned or returned any of the documents. (Wallace Decl., ¶8). In addition, copies of Mr. Wallace's 09 July 2003, 10 September 2003 and 14 October 2003 letters to Dr. Drinkwater and Dr. Drinkwater's 11 August 2003 reply communication were attached as exhibits to the declaration.

Under these circumstances, it can be concluded that Dr. Drinkwater's conduct constitutes a refusal to sign the application. The evidence submitted supports a finding that the nonsigning inventor refused to sign the application for the reasons set forth above. Accordingly, it is appropriate to accord the national stage application status under 37 CFR §1.47(a) at this time.

CONCLUSION

The petition under 37 CFR §1.47(a) is **GRANTED**.

The U.S. Designated/Elected Office is authorized to accept the application as a 37 CFR 1.47(a) application using the declaration filed 02 February 2004. The application has an international filing date of 14 December 2001 under 35 U.S.C. 363, and a date of 01 December 2003 under 35 U.S.C. 371(c)(1), (c)(2) and (c)(4).

As provided in 37 CFR 1.47(a), a notice of the filing of this application will be forwarded to the non-signing inventors at their respective last known address of record. Also, a notice of the filing of this application will be published in the Official Gazette.

The application is being returned to the International Division for processing as the U.S. National Stage of the above-identified international application.

/Cynthia M. Kratz/

Cynthia M. Kratz
Attorney Advisor
Office of PCT Legal Administration

Telephone: (703) 306-5467
Fax: (703)-308-6459

UNITED STATES PATENT AND TRADEMARK OFFICE

Commissioner for Patents
United States Patent and Trademark Office
P.O. Box 1450
Alexandria, VA 22313-1450
www.uspto.gov

OLIFF & BERRIDGE, PLC
P.O. BOX 19928
ALEXANDRIA VA 22320

COPY MAILED

NOV 22 2006

OFFICE OF PETITIONS

In re Application of	:	
Holmes et al.	:	
Application No. 11/490,086	:	DECISION GRANTING
Filing or 371(c) Date: 07/21/2006	:	STATUS UNDER
Attorney Docket No.	:	37 CFR 1.47(a)
115862.01	:	

This is in response to the Oath and Petition Under 37 CFR 1.47, filed July 21, 2006, from prior application 10/415,903, of which the above-identified application is a divisional application.

The above-identified application and papers have been reviewed and found in compliance with 37 CFR 1.47(c). This application is hereby accorded Rule 1.47(a) status. The Office will dispense with the Notice to the nonsigning inventor and the announcement in the Official Gazette.[1].

The application file is being referred to the Office of Initial Patent Examination for continued processing.

Telephone inquiries related to this decision may be directed to the undersigned at (571) 272-3232.

Derek L. Woods
Attorney
Office of Petitions

[1] See 37 CFR 1.47(c) and MPEP 201.06(c).

UNITED STATES PATENT AND TRADEMARK OFFICE

Commissioner for Patents
United States Patent and Trademark Office
P.O. Box 1450
Alexandria, VA 22313-1450
www.uspto.gov

PILLSBURY WINTHROP SHAW PITTMAN, LLP
PO BOX 10500
MCLEAN VA 22102

COPY MAILED

MAY 09 2007

OFFICE OF PETITIONS

In re Application of :
Heinrich Sinnreich :
Application No. 11/490,130 : DECISION ACCORDING STATUS
Filed: July 21, 2006 : UNDER 37 CFR 1.47(b)
Attorney Docket No. 539036-0356304 :

This is in response to the petition under 37 C.F.R. § 1.47(b), filed March 12, 2007.

The petition under 37 C.F.R. § 1.47(b) is **GRANTED**.

The petition and declaration have been reviewed and determined to be in compliance with 37 CFR 1.47(b). Specifically, petitioner has shown that inventor Heinrich Sinnreich refused to sign the declaration after having been presented with the application papers.

The application is hereby accorded Rule 47 status.

As provided in 37 CFR 1.47(c), the Office will provide notice of this application's filing to the non-signing inventor at the last known address provided in the petition. Notice will also be provided in the Official Gazette.

The matter is being forwarded to the Office of Initial Patent Examination for pre-examination processing.

Telephone inquiries related to this decision may be directed to the undersigned at (571)272-3207.

Cliff Congo
Petitions Attorney
Office of Petitions

UNITED STATES PATENT AND TRADEMARK OFFICE

Commissioner for Patents
United States Patent and Trademark Office
P.O. Box 1450
Alexandria, VA 22313-1450
www.uspto.gov

HEINRICH SINNREICH
3101 WYNDHAM LANE
RICHARDSON TX 75082

COPY MAILED

MAY 09 2007

OFFICE OF PETITIONS

In re Application of :
Heinrich Sinnreich :
Application No. 11/490,130 :
Filed: July 21, 2006 : LETTER
Title: System and Method for Securely :
Storing and Accessing Credentials and
Certificates for Secure VOIP Endpoints

Dear Mr. Sinnreich:

You are named as the sole inventor in the above-identified United States patent application filed under the provisions of 35 USC 116 (United States Code) and 37 CFR 1.47(b), Rules of Practice in Patent Cases. Should a patent be granted on the application you will be designated therein as the sole inventor.

As the named inventor you are entitled to inspect any paper in the file wrapper of the application, order copies of all or any part thereof (at a prepaid cost per 37 CFR 1.19) or make your position of record in the application. Alternatively, you may arrange to do any of the preceding through a registered patent attorney or agent presenting written authorization from you. If you care to join the application, agent of record would presumably assist you. Joining in the application would entail the filing of an appropriate oath or declaration by you pursuant to 37 CFR 1.63.

Telephone inquiries regarding this communication should be directed to Petitions Attorney Cliff Congo at (571)272-3207. Requests for information regarding your application should be directed to the File Information Unit at (703) 308-2733. Information regarding how to pay for and order a copy of the application, or a specific paper in the application, should be directed to the Certification Division at (703) 308-9726 or 1-800-972-6382 (outside the Washington D.C. area).

Cliff Congo
Petitions Attorney
Office of Petitions

UNITED STATES PATENT AND TRADEMARK OFFICE

UNITED STATES DEPARTMENT OF COMMERCE
United States Patent and Trademark Office
Address: COMMISSIONER FOR PATENTS
P.O. Box 1450
Alexandria, Virginia 22313-1450
www.uspto.gov

USG Corporation
700 N. Highway 45
Libertyville, IL 60048

Mail Date: 04/21/2010

Applicant	: David R. Blackburn	: DECISION ON REQUEST FOR
Patent Number	: 7601214	: RECALCULATION of PATENT
Issue Date	: 10/13/2009	: TERM ADJUSTMENT IN VIEW
Appliction No	: 11/490,150	: OF WYETH
Filed	: 07/20/2006	:
		:

The Patentee's Request for Recalculation is **DISMISSED.**

This Request is deemed ineligible for consideration for one or more of the following reasons:

(A). The patent for which PTA recalculation is requested is either a design or reissue application or is a reexamination proceeding;

(B). The patent for which PTA recalculation is requested resulted from a utility or plant application filed under 35 USC 111(a) before May 29, 2000 and no CPA filed in the application on/after May 29, 2000;

(C). The patent for which PTA recalculation is requested resulted from an international application in which the international filing date was before May 29, 2000 and no CPA filed in the application on/after May 29, 2000;

(D). The patent for which PTA recalculation is requested issued on/after March 2, 2010;

(E). The Request for Recalculation was filed more than 180 days after the grant date of the patent and the request was not filed within two months of a dismissal of a request for reconsideration of the of the patent term under 37 CFR 1.705(d);

(F). The Request for Recalculation is not solely limited to USPTO pre-Wyeth interpretation of 35 U.S.C. 154(b)(2)(A);

or

(G). A civil action was filed pursuant to 35 U.S.C. 154(b)(4)(A)concerning the same patent at issue in this request.

Patentee may file a reply to this decision dismissing the Request for Recalculation. Patentee must file such reply within one month or thirty days, whichever is longer, of the mail date of the decision dismissing the Request for Recalculation. No fee is required if patentee is asserting in the reply that the dismissal for ineligibility is improper.

Patentee should use document code PET.OP if electronically filing a reply to this dismissal. If the USPTO finds that the request was improperly deemed ineligible, the USPTO will mail applicant a recalculation determination.

Patentee should be aware that in order to preserve the right to review in the United States District Court for the District of Columbia of the USPTO patent term adjustment determination, patentee must ensure that he or she also take the steps required under 35 U.S.C. 154(b)(4)(A). Nothing in the request for recalculation should be construed as providing an alternative time frame for commencing a civil action under 35 U.S.C. 154 (b)(4)(A).

Any questions concerning this decision should be directed to the Office of Patent Legal Administration at 571-272-7702.

UNITED STATES PATENT AND TRADEMARK OFFICE

Commissioner for Patents
United States Patent and Trademark Office
P.O. Box 1450
Alexandria, VA 22313-1450
www.uspto.gov

NALCO COMPANY
PATENT & LICENSING DEPARTMENT
1601 W. DIEHL ROAD
NAPERVILLE IL 60563-1198

COPY MAILED

APR 17 2008

OFFICE OF PETITIONS

In re Application of :
Bo L. Tran et al :
Application No. 11/490,193 : DECISION GRANTING PETITION
Filed: July 20, 2006 : UNDER 37 CFR 1.313(c)(2)
Attorney Docket No. 7782 P2 :

This is a decision on the petition under 37 CFR 1.313(c)(2), filed April 14, 2008, to withdraw the above-identified application from issue after payment of the issue fee.

The petition is **GRANTED**.

The above-identified application is withdrawn from issue for consideration of a submission under 37 CFR 1.114 (request for continued examination). *See* 37 CFR 1.313(c)(2).

Petitioner is advised that the issue fee paid on March 20, 2008 ***cannot be refunded. If, however, this application is again allowed, petitioner may request that it be applied towards the issue fee required by the new Notice of Allowance.***[1]

Telephone inquiries should be directed to the undersigned at (571) 272-3208.

This application is being referred to Technology Center AU 1796 for processing of the request for continued examination under 37 CFR 1.114 and for consideration of the concurrently filed IDS.

Karen Creasy

Karen Creasy
Petitions Examiner
Office of Petitions

[1] *The request to apply the issue fee to the new Notice may be satisfied by completing and returning the new Part B – Fee(s) Transmittal Form (along with any balance due at the time of submission). Petitioner is advised that the Issue Fee Transmittal Form must be completed and timely submitted to avoid abandonment of the application.*

UNITED STATES PATENT AND TRADEMARK OFFICE

Commissioner for Patents
United States Patent and Trademark Office
P.O. Box 1450
Alexandria, VA 22313-1450
www.uspto.gov

OBLON, SPIVAK, MCCLELLAND MAIER & NEUSTADT, L.L.P.
1940 DUKE STREET
ALEXANDRIA VA 22314

MAILED

JUN 0 8 2010

OFFICE OF PETITIONS

In re Application of :
Rudolf Ritter et al :
Application No. 11/490,238 : DECISION ON PETITION
Filed: July 21, 2006 :
Attorney Docket No. 293384US2CONT :

This is a decision on the petition filed March 24, 2010, requesting under 37 CFR 1.182 that the terminal disclaimer filed March 23, 2010 be withdrawn The $140.00 petition fee has been received.

The petition is granted.

Petitioner request that the terminal disclaimer filed March 23, 2010, be withdrawn because of an inadvertent clerical error. A new terminal disclaimer that correctly identifies the Assignee was filed on March 24, 2010. The new terminal disclaimer was approved on April 8, 2010.

In view of the Approval of the terminal disclaimer filed on March 24, 2010, the petition (filed on March 24, 2010) to withdraw the terminal disclaimer filed on March 23, 2010, is granted.

Telephone inquiries related to this decision should be addressed to the undersigned at (571) – 272-3208.

This application is being referred to Technology Center AU 2434 for appropriate action by the Examiner in the normal course of business on the amendment received March 23, 2010.

/KOC/
Karen Creasy
Petitions Examiner
Office of Petitions

UNITED STATES PATENT AND TRADEMARK OFFICE

UNITED STATES DEPARTMENT OF COMMERCE
United States Patent and Trademark Office
Address: COMMISSIONER FOR PATENTS
P.O. Box 1450
Alexandria, Virginia 22313-1450
www.uspto.gov

APPLICATION NO.	FILING DATE	FIRST NAMED INVENTOR	ATTORNEY DOCKET NO.	CONFIRMATION NO.
11/490,258	07/21/2006	Shinichi Kodama	062822	2539

7590 08/31/2009

WESTERMAN, HATTORI, DANIELS & ADRIAN, LLP
1250 CONNECTICUT AVENUE, NW
SUITE 700
WASHINGTON, DC 20036

EXAMINER	
VUONG, QUOCHIEN B	

ART UNIT	PAPER NUMBER
2618	

NOTIFICATION DATE	DELIVERY MODE
08/31/2009	ELECTRONIC

DECISION GRANTING PETITION UNDER 37 CFR 1.138(d)

The declaration of express abandonment is recognized

This is in response to the petition under 37 CFR 1.138(d), requesting for a refund of any previously paid search fee and excess claims fee in the above-identified application.

The petition is granted.

The express abandonment is recognized. Any previously paid search fee and excess claims fee are hereby refunded.

Telephone inquiries should be directed to the Office of Data Management at (571) 272-4200.

Nioni Farmer

Patent Publication Branch
Office of Data Management

Refund Ref:
08/31/2009 NFARMER 0000168636

CHECK Refund Total: $700.00

Adjustment date: 08/31/2009 NFARMER
07/24/2006 AKELECH1 00000017 11490258
02 FC:1111 -500.00 OP
04 FC:1201 -200.00 OP

UNITED STATES PATENT AND TRADEMARK OFFICE

Commissioner for Patents
United States Patent and Trademark Office
P.O. Box 1450
Alexandria, VA 22313-1450
www.uspto.gov

DICKSTEIN SHAPIRO LLP
1825 EYE STREET NW
WASHINGTON DC 20006-5403

MAILED

JUL 06 2009

OFFICE OF PETITIONS

In re Application of	:	
Michael REED et al.	:	
Application No. 11/490,263	:	DECISION ON PETITION
Filed: July 21, 2006	:	UNDER 37 CFR 1.78(a)(3)
Attorney Docket No. E4800.0020/P001-G	:	

This is a decision on the petition under 37 CFR 1.78(a)(3), filed June 11, 2009, to accept an unintentionally delayed claim under 35 U.S.C. § 120 for the benefit of priority to the prior-filed nonprovisional applications set forth in the amendment filed with the petition.

The petition is **DISMISSED**.

A petition for acceptance of a claim for late priority under 37 CFR 1.78(a)(3) is only applicable to those applications filed on or after November 29, 2000. Further, the petition is appropriate only after the expiration of the period specified in 37 CFR 1.78(a)(2)(ii). In addition, the petition under 37 CFR 1.78(a)(3) must be accompanied by:

(1) the reference required by 35 U.S.C. § 120 and 37 CFR 1.78(a)(2)(i) of the prior-filed application, unless previously submitted;
(2) the surcharge set forth in § 1.17(t); and
(3) a statement that the entire delay between the date the claim was due under 37 CFR 1.78(a)(2)(ii) and the date the claim was filed was unintentional. The Director may require additional information where there is a question whether the delay was unintentional.

The petition does not satisfy item (1) above.

The reference to add the above-noted, prior-filed applications in the first sentence of the specification on page one following the title is not acceptable as drafted since it improperly incorporates by reference the prior-filed applications. An incorporation by reference statement added after an application's filing date is not effective

because no new matter can be added to an application after its filing date (*see* 35 U.S.C. § 132(a)). If an incorporation by reference statement is included in an amendment to the specification to add a benefit claim under 35 U.S.C. § 120 after the filing date of the application, the amendment would not be proper. When a benefit claim under 35 U.S.C. § 120 is submitted after the filing of an application, the reference to the prior application cannot include an incorporation by reference statement of the prior application. *See* Dart Industries v. Banner, 636 F.2d 684, 207 USPQ 273 (C.A.D.C. 1980). *Note* MPEP §§ 201.06(c) and 608.04(b).

If reconsideration of this decision is desired, a renewed petition under 37 CFR § 1.78(a)(3) and an Application Data Sheet or an amendment (complying with the provisions of 37 CFR 1.121 and 37 CFR 1.76(b)(5)) to correct the above matters are required.

Further correspondence with respect to this matter should be addressed as follows:

By mail: Mail Stop PETITIONS
Commissioner for Patents
Post Office Box 1450
Alexandria, VA 22313-1450

By hand: Customer Service Window
Mail Stop Petitions
Randolph Building
401 Dulany Street
Alexandria, VA 22314

By fax: (571) 273-8300
ATTN: Office of Petitions

Any questions concerning this matter may be directed to Michelle R. Eason at (571) 272-4231.

Thurman Page
Petitions Examiner
Office of Petitions

UNITED STATES PATENT AND TRADEMARK OFFICE

Commissioner for Patents
United States Patent and Trademark Office
P.O. Box 1450
Alexandria, VA 22313-1450
www.uspto.gov

DICKSTEIN SHAPIRO LLP
1825 EYE STREET NW
Washington DC 20006-5403

MAILED

SEP 0 9 2009

OFFICE OF PETITIONS

In re Application of	:	
Michael REED et al.	:	
Application No. 11/490,263	:	DECISION ON PETITION
Filed: July 21, 2006	:	UNDER 37 CFR 1.78(a)(3)
Attorney Docket No. E4800.0020/P001-G	:	

This is a decision on the renewed petition under 37 CFR 1.78(a)(3), filed August 05, 2009, to accept an unintentionally delayed claim under 35 U.S.C. § 120 for the benefit of priority to the prior-filed nonprovisional applications set forth in the amendment filed with the petition.

The petition is **GRANTED**.

A petition for acceptance of a claim for late priority under 37 CFR 1.78(a)(3) is only applicable to those applications filed on or after November 29, 2000. Further, the petition is appropriate only after the expiration of the period specified in 37 CFR 1.78(a)(2)(ii). In addition, the petition under 37 CFR 1.78(a)(3) must be accompanied by:

(1) the reference required by 35 U.S.C. § 120 and 37 CFR 1.78(a)(2)(i) of the prior-filed application, unless previously submitted;
(2) the surcharge set forth in § 1.17(t); and
(3) a statement that the entire delay between the date the claim was due under 37 CFR 1.78(a)(2)(ii) and the date the claim was filed was unintentional. The Director may require additional information where there is a question whether the delay was unintentional.

All of the above requirements having been satisfied, the late claim for priority under 35 U.S.C. § 120 is accepted as being unintentionally delayed.

The granting of the petition to accept the delayed benefit claim to the prior-filed applications under 37 CFR 1.78(a)(3) should not be construed as meaning that this application is entitled to the benefit of the prior-filed applications. In order for this application to be entitled to the benefit of the prior-filed applications, all other requirements under 35 U.S.C. § 120 and 37 CFR 1.78(a)(1) and (a)(2) must be met. Similarly, the fact that the corrected Filing Receipt accompanying this decision on petition includes the prior-filed applications should not be construed as meaning that applicant is entitled to the claim for benefit of priority to the prior-filed applications noted thereon. Accordingly, the examiner will, in due course, consider this benefit claim and determine whether the application is entitled to the benefit of the earlier filing date.

A corrected Filing Receipt, which includes the priority claim to the prior-filed nonprovisional applications, accompanies this decision on petition.

Any inquiries concerning this decision may be directed to Michelle R. Eason at (571) 272-4231. All other inquiries concerning either the examination procedures or status of the application should be directed to the Technology Center.

This application is being forwarded to Technology Center Art Unit 2167 for consideration by the examiner of applicant's entitlement to claim benefit of priority under 35 U.S.C. § 120 to the prior-filed applications.

Thurman K. Page
Petitions Office
Office of Petitions

ATTACHMENT: Corrected Filing Receipt

UNITED STATES PATENT AND TRADEMARK OFFICE

UNITED STATES DEPARTMENT OF COMMERCE
United States Patent and Trademark Office
Address: COMMISSIONER FOR PATENTS
P.O. Box 1450
Alexandria, Virginia 22313-1450
www.uspto.gov

APPLICATION NUMBER	FILING or 371(c) DATE	GRP ART UNIT	FIL FEE REC'D	ATTY.DOCKET.NO	TOT CLAIMS	IND CLAIMS
11/490,263	07/21/2006	2167	2850	E4800.0020/P001-G	33	9

CONFIRMATION NO. 2578

CORRECTED FILING RECEIPT

24998
DICKSTEIN SHAPIRO LLP
1825 EYE STREET NW
Washington, DC 20006-5403

Date Mailed: 09/09/2009

Receipt is acknowledged of this non-provisional patent application. The application will be taken up for examination in due course. Applicant will be notified as to the results of the examination. Any correspondence concerning the application must include the following identification information: the U.S. APPLICATION NUMBER, FILING DATE, NAME OF APPLICANT, and TITLE OF INVENTION. Fees transmitted by check or draft are subject to collection. Please verify the accuracy of the data presented on this receipt. **If an error is noted on this Filing Receipt, please submit a written request for a Filing Receipt Correction. Please provide a copy of this Filing Receipt with the changes noted thereon. If you received a "Notice to File Missing Parts" for this application, please submit any corrections to this Filing Receipt with your reply to the Notice. When the USPTO processes the reply to the Notice, the USPTO will generate another Filing Receipt incorporating the requested corrections**

Applicant(s)

Michael Reed, Chicago, IL;
Greg Bestick, Lacosta, CA;
Carol Greenhalgh, Austin, TX;
Norman J. Bastin, Chicago, IL;
Ron Carlton, San Marcos, CA;
Stanley D. Frank, Chicago, IL;
Dale Good, Evanston, IL;
Neil Holman, Buffalo Grove, IL;
Carl Holzman, Chicago, IL;
Ann Jensen, Austin, TX;
Harold Kester, San Diego, CA;
Dave Meatman, Solana Beach, CA;
Edwardo Munevar, San Diego, CA;
Derryl Rogers, Carlsbad, CA;
Gail B. Maatman, Hollidaysburg, PA;

Power of Attorney:

Gary Hoffman--26411
Thomas D'Amico--28371
Donald Gregory--28954
James Brady Jr--32115
Jon Grossman--32699
Mark Thronson--33082
Oscar Towler III--33803
Kenneth Sheehan--36270
James Trussell--37251
George Pinchak Jr--37697

Domestic Priority data as claimed by applicant

This application is a CON of 11/150,494 06/13/2005 PAT 7,082,437
and is a CON of 11/150,813 06/13/2005 PAT 7,085,778

and said 11/150,494 06/13/2005
is a CON of 10/103,814 03/25/2002 PAT 6,978,277
and said 11/150,813 06/13/2005
is a CON of 10/103,814 03/25/2002 PAT 6,978,277
which is a CON of 08/202,985 02/28/1994 PAT 6,546,399
which is a CON of 08/113,955 08/31/1993 ABN
and is a CON of 07/848,960 06/26/1992 ABN
and said 08/113,955 08/31/1993
is a CON of 07/426,917 10/26/1989 PAT 5,241,671
and said 07/848,960 06/26/1992
is a CIP of 07/426,917 10/26/1989 PAT 5,241,671

Foreign Applications
UNITED STATES OF AMERICA PCT/US90/06098 10/26/1990

If Required, Foreign Filing License Granted: 08/08/2006

The country code and number of your priority application, to be used for filing abroad under the Paris Convention, is **US 11/490,263**

Projected Publication Date: Not Applicable

Non-Publication Request: No

Early Publication Request: No

Title

Multimedia search system

Preliminary Class

707

PROTECTING YOUR INVENTION OUTSIDE THE UNITED STATES

Since the rights granted by a U.S. patent extend only throughout the territory of the United States and have no effect in a foreign country, an inventor who wishes patent protection in another country must apply for a patent in a specific country or in regional patent offices. Applicants may wish to consider the filing of an international application under the Patent Cooperation Treaty (PCT). An international (PCT) application generally has the same effect as a regular national patent application in each PCT-member country. The PCT process **simplifies** the filing of patent applications on the same invention in member countries, but **does not result** in a grant of "an international patent" and does not eliminate the need of applicants to file additional documents and fees in countries where patent protection is desired.

Almost every country has its own patent law, and a person desiring a patent in a particular country must make an application for patent in that country in accordance with its particular laws. Since the laws of many countries differ in various respects from the patent law of the United States, applicants are advised to seek guidance from specific foreign countries to ensure that patent rights are not lost prematurely.

Applicants also are advised that in the case of inventions made in the United States, the Director of the USPTO must issue a license before applicants can apply for a patent in a foreign country. The filing of a U.S. patent application serves as a request for a foreign filing license. The application's filing receipt contains further information and guidance as to the status of applicant's license for foreign filing.

Applicants may wish to consult the USPTO booklet, "General Information Concerning Patents" (specifically, the section entitled "Treaties and Foreign Patents") for more information on timeframes and deadlines for filing foreign patent applications. The guide is available either by contacting the USPTO Contact Center at 800-786-9199, or it can be viewed on the USPTO website at http://www.uspto.gov/web/offices/pac/doc/general/index.html.

For information on preventing theft of your intellectual property (patents, trademarks and copyrights), you may wish to consult the U.S. Government website, http://www.stopfakes.gov. Part of a Department of Commerce initiative, this website includes self-help "toolkits" giving innovators guidance on how to protect intellectual property in specific countries such as China, Korea and Mexico. For questions regarding patent enforcement issues, applicants may call the U.S. Government hotline at 1-866-999-HALT (1-866-999-4158).

LICENSE FOR FOREIGN FILING UNDER

Title 35, United States Code, Section 184

Title 37, Code of Federal Regulations, 5.11 & 5.15

GRANTED

The applicant has been granted a license under 35 U.S.C. 184, if the phrase "IF REQUIRED, FOREIGN FILING LICENSE GRANTED" followed by a date appears on this form. Such licenses are issued in all applications where the conditions for issuance of a license have been met, regardless of whether or not a license may be required as set forth in 37 CFR 5.15. The scope and limitations of this license are set forth in 37 CFR 5.15(a) unless an earlier license has been issued under 37 CFR 5.15(b). The license is subject to revocation upon written notification. The date indicated is the effective date of the license, unless an earlier license of similar scope has been granted under 37 CFR 5.13 or 5.14.

This license is to be retained by the licensee and may be used at any time on or after the effective date thereof unless it is revoked. This license is automatically transferred to any related applications(s) filed under 37 CFR 1.53(d). This license is not retroactive.

The grant of a license does not in any way lessen the responsibility of a licensee for the security of the subject matter as imposed by any Government contract or the provisions of existing laws relating to espionage and the national security or the export of technical data. Licensees should apprise themselves of current regulations especially with respect to certain countries, of other agencies, particularly the Office of Defense Trade Controls, Department of State (with respect to Arms, Munitions and Implements of War (22 CFR 121-128)); the Bureau of Industry and Security, Department of Commerce (15 CFR parts 730-774); the Office of Foreign AssetsControl, Department of Treasury (31 CFR Parts 500+) and the Department of Energy.

NOT GRANTED

No license under 35 U.S.C. 184 has been granted at this time, if the phrase "IF REQUIRED, FOREIGN FILING LICENSE GRANTED" DOES NOT appear on this form. Applicant may still petition for a license under 37 CFR 5.12, if a license is desired before the expiration of 6 months from the filing date of the application. If 6 months has lapsed from the filing date of this application and the licensee has not received any indication of a secrecy order under 35 U.S.C. 181, the licensee may foreign file the application pursuant to 37 CFR 5.15(b).

UNITED STATES PATENT AND TRADEMARK OFFICE

UNITED STATES DEPARTMENT OF COMMERCE
United States Patent and Trademark Office
Address: COMMISSIONER FOR PATENTS
P.O. Box 1450
Alexandria, Virginia 22313-1450
www.uspto.gov

DICKSTEIN SHAPIRO LLP
1825 EYE STREET NW
Washington, DC 20006-5403

Mail Date: 04/23/2010

Applicant	: Michael Reed	: DECISION ON REQUEST FOR
Patent Number	: 7664775	: RECALCULATION of PATENT
Issue Date	: 02/16/2010	: TERM ADJUSTMENT IN VIEW
Appliction No	: 11/490,263	: OF WYETH AND NOTICE OF INTENT TO
Filed	: 07/21/2006	: ISSUE CERTIFICATE OF CORRECTION
		:

The Request for Recalculation is **GRANTED** to the extent indicated.

The patent term adjustment has been determined to be **747** days. The USPTO will *sua sponte* issue a certificate of correction reflecting the amount of PTA days determined by the recalculation.

Prior to the issuance of the certificate of correction, the USPTO will afford patentee an opportunity to be heard and request reconsideration. Accordingly, patentee has **one month or thirty (30) days**, whichever is longer, to file a request for reconsideration of this patent term adjustment calculation. See 35 U.S.C. 154(b)(3)(B)(ii) and 37 CFR 1.322(a)(4). No extensions of time will be granted under 37 CFR 1.136.

Patentee should use document code PET.OP if electronically filing a request for reconsideration of this patent term adjustment calculation. The patentee must also include the information required by 37 CFR 1.705(b)(2) and the fee required by 37 CFR 1.18(e). If patentee does not file a timely request for reconsideration of this patent term adjustment calculation including the information required by 37 CFR 1.705(b)(2) and the fee required by 37 CFR 1.18(e), the USPTO will issue a certificate of correction reflecting the PTA determination noted above.

Patentee should be aware that in order to preserve the right to review in the United States District Court for the District of Columbia of the USPTO patent term adjustment determination, patentee must ensure that he or she also take the steps required under 35 U.S.C. 154(b)(4)(A) in a timely manner. Nothing in the request for recalculation should be construed as providing an alternative time frame for commencing a civil action under 35 U.S.C. 154(b)(4)(A).

Any questions concerning this decision should be directed to the Office of Patent Legal Administration at 571-272-7702.

SPE RESPONSE FOR CERTIFICATE OF CORRECTION

Paper No.: _____

DATE : 5/24/10

TO SPE OF : ART UNIT 2167 (2100)

SUBJECT : Request for Certificate of Correction for Appl. No.: 11/490,263 Patent No.: 7,664,775

Please respond to this request for a certificate of correction within 7 days.

FOR IFW FILES:

Please review the requested changes/corrections as shown in the **COCIN** document(s) in the IFW application image. No new matter should be introduced, nor should the scope or meaning of the claims be changed.

Please complete the response (see below) and forward the completed response to scanning using document code **COCX**.

FOR PAPER FILES:

Please review the requested changes/corrections as shown in the attached certificate of correction. Please complete this form (see below) and forward it with the file to:

Certificates of Correction Branch (CofC)
Randolph Square – 9D10-A
Palm Location 7580

Ernest C. White, LTE
Randolph Sq. Ste 9D62A
703-756-1590

Thank You For Your Assistance

The request for issuing the above-identified correction(s) is hereby:

Note your decision on the appropriate box.

☒ **Approved**	**All** changes apply.
☐ **Approved in Part**	Specify below which changes **do not** apply.
☐ **Denied**	State the reasons for denial below.

JOHN COTTINGHAM
SUPERVISORY PATENT EXAMINER
TECHNOLOGY CENTER 2100

SPE _____ **ART UNIT** 2167

UNITED STATES PATENT AND TRADEMARK OFFICE

Commissioner for Patents
United States Patent and Trademark Office
P.O. Box 1450
Alexandria, VA 22313-1450
www.uspto.gov

SEAN KAUFHOLD
P. O. BOX 89626
SIOUX FALLS, SD 57109

COPY MAILED

JAN 2 9 2009

OFFICE OF PETITIONS

In re Application of	:	
Tammera D. Hicks	:	
Application No. 11/490,271	:	ON PETITION
Filed: July 21, 2006	:	
Attorney Docket No. BHA 784	:	

This is a decision on the petition under 37 CFR 1.137(b), filed on December 4, 2008, to revive the above-identified application.

The application became abandoned for failure to respond to the Notice of Allowance and Fee(s) Due mailed August 15, 2008. A Notice of Abandonment was mailed on December 11, 2008.

The petition satisfies the requirements of 37 CFR 1.137(b) in that petitioner has supplied (1) the reply in the form of $755 for payment of the issue fee; (2) the petition fee of $810; and (3) a proper statement of unintentional delay. Therefore, the petition is **GRANTED.**

This application file is being referred to the Office of Data Management for further processing into a patent.

Telephone inquiries concerning this decision should be directed to the undersigned at (571) 272-3226.

Andrea Smith
Petitions Examiner
Office of Petitions

UNITED STATES PATENT AND TRADEMARK OFFICE

Commissioner for Patents
United States Patent and Trademark Office
P.O. Box 1450
Alexandria, VA 22313-1450
www.uspto.gov
DIW Sep-07

MACPHERSON KWOK CHEN & HEID LLP
2033 GATEWAY PLACE
SUITE 400
SAN JOSE CA 95110

COPY MAILED
SEP 14 2007
OFFICE OF PETITIONS

In re Application of	:	
Chang et al.	:	DECISION ON PETITION TO
Application Number: 11/490280	:	WITHDRAW HOLDING OF
Filing Date: 07/19/2006	:	ABANDONMENT
Attorney Docket Number: ABS-2620 US	:	

This is a decision on the petition, filed on 19 July, 2007, to withdraw the holding of abandonment in the above-identified application.

The petition is **GRANTED**.

The application was held abandoned for failure to timely file replacement drawings as required by the Notice to File Corrected Application Papers mailed on 9 August, 2006, which set a two (2) month period for reply. Notice of Abandonment was mailed on 19 April, 2007.

Petitioner asserts that a response to the Notice was timely filed, in that 16 sheets of replacement drawings were filed on 2 October, 2006. In support, petitioners have supplied a copy of 16 sheets of replacement drawings as well as a postcard bearing an "Office-date" of 2 October, 2006, itemizing the filing of 16 sheets of replacement drawings. Petitioner asserts that a cover sheet was filed with the drawings, however, which miscaptioned the application number.

A review of the official file reveals that on 2 October, 2006, 16 sheets of replacement drawings were filed. The drawings were originally matched with a different application, but have now been placed in the correct application file.

It is noted that although the application number was properly captioned on the drawing sheets, the transmittal letter accompanying the drawing sheets filed on 2 October, 2006, inadvertently miscaptioned the application number as "11/290,280". Under current Office procedure, a response that has an incorrect serial number is handled in accordance with M.P.E.P. § 508.03. If a paper having an incorrect serial number contains sufficient information to identify the correct application and was timely received at the Office, the holding of abandonment will be withdrawn. In reviewing the papers which were submitted, it is concluded that there was sufficient information thereon to associate the papers with the present application file.

The papers filed on 2 October, 2006, have been located in the Office. A copy of the papers has been placed in the file of the subject application.

As petitioner has provided convincing evidence that a reply to the Office communication was transmitted to the USPTO on 2 October, 2006, the showing of record is that a response was timely filed, and there is no abandonment in fact. Any inconvenience caused to applicant is regretted.

The holding of abandonment is withdrawn, and the Notice of Abandonment is vacated.

The application is being referred to the Office of Initial Patent Examination for further processing.

Telephone inquiries concerning this matter may be directed to the undersigned at (571)272-3231.

D Wood

Douglas I. Wood
Senior Petitions Attorney
Office of Petitions

UNITED STATES PATENT AND TRADEMARK OFFICE

Commissioner for Patents
United States Patent and Trademark Office
P.O. Box 1450
Alexandria, VA 22313-1450
www.uspto.gov

COPY MAILED

MAR 0 6 2007

OFFICE OF PETITIONS

SHUMAKER & SIEFFERT, P. A.
1625 RADIO DRIVE
SUITE 300
WOODBURY, MN 55125

In re Application of :
Yutaro Kaneko, et al. :
Application No. 11/490,291 : DECISION ON PETITION
Filed: July 20, 2006 : TO WITHDRAW
Attorney Docket No. 1085-061US01 : FROM RECORD
:

This is a decision on the Request to Withdraw as attorney or agent of record under 37 C.F.R. § 1.36(b) filed November 3, 2006.

The request is **NOT APPROVED**.

A grantable request to withdraw as attorney/agent of record must be signed by every attorney/agent seeking to withdraw or contain a clear indication that one attorney is signing on behalf of another/others. A request to withdraw will not be approved unless at least 30 (thirty) days would remain between the date of approval and the later of the expiration date of a time to file a response or the expiration date of the maximum time period which can be extended under 37 C.F.R. § 1.136(a).

The Office cannot approve the request at this time since the reasons provided do not meet any of the conditions under the mandatory or permissive categories enumerated in 37 CFR 10.40. Section 10.40 of Title 37 of the Code of Federal Regulation states, "[a] practitioner shall not withdraw from employment in a proceeding before the Office without permission from the Office[.]" More specifically, 37 CFR 10.40 states, "[i]f paragraph (b) of this section is not applicable, a practitioner may not request permission to withdraw in matter pending before the Office unless such request or such withdrawal is" for one the permissive reasons listed in 37 CFR 10.40(c). The reasons set forth in the request, "application is being transferred to another law firm", does not meet any of the conditions set forth in 37 CFR 10.40.

In order to request or take action in a patent matter, the assignee must establish its ownership of the patent to the satisfaction of the Director. In this regard, a Statement under 37 CFR 3.73(b) must have either: (i) documentary evidence of a chain of title from the original owner to the assignee (*e.g.*, copy of an executed assignment), and a statement affirming that the documentary evidence of the chain of title from the original owner to the assignee was or concurrently is being

submitted for recordation pursuant to § 3.11; or (ii) a statement specifying where documentary evidence of a chain of title from the original owner to the assignee is recorded in the assignment records of the Office (*e.g.*, reel and frame number). The power of attorney filed on November 20, 2006 does not include the reel and frame or a proper chain of title.

All future communications from the Office will continue to be directed to the above-listed address until otherwise notified by applicant.

Telephone inquiries concerning this decision should be directed to undersigned at 571-272-1642.

April M. Wise
Petitions Examiner
Office of Petitions

cc: GLOBAL IP COUNSELORS, LLP
1233 20TH STREET, NW
SUITE 700
WASHINGTON, DC 20036-2680

SPE RESPONSE FOR CERTIFICATE OF CORRECTION

Paper No.:

DATE :

TO SPE OF : ART UNIT

SUBJECT : Request for Certificate of Correction on Patent No.:

A response is requested with respect to the accompanying request for a certificate of correction.

Please complete this form and return with file, within **7** days to:
Certificates of Correction Branch - ST (South Tower) 9A22
Palm location **7590** - Tel. No. (703) 305-8309

With respect to the change(s) requested, correcting Office and/or Applicant's errors, should the patent read as shown in the certificate of correction? No new matter should be introduced, nor should the scope or meaning of the claims be changed.

Thank You For Your Assistance **Certificates of Correction Branch**

The request for issuing the above-identified correction(s) is hereby:

Note your decision on the appropriated box.

☐ **Approved** All changes apply.

☐ **Approved in Part** Specify below which changes **do not** apply.

☐ **Denied** State the reasons for denial below.

Comments:

SPE: Art Unit

UNITED STATES PATENT AND TRADEMARK OFFICE

UNITED STATES DEPARTMENT OF COMMERCE
United States Patent and Trademark Office
Address: COMMISSIONER FOR PATENTS
P.O. Box 1450
Alexandria, Virginia 22313-1450
www.uspto.gov

HUNTON & WILLIAMS LLP
INTELLECTUAL PROPERTY DEPARTMENT
1900 K STREET, N.W.
SUITE 1200
WASHINGTON, DC 20006-1109

Mail Date: 04/21/2010

Applicant	: Helene Lannibois-Drean	: DECISION ON REQUEST FOR
Patent Number	: 7589144	: RECALCULATION of PATENT
Issue Date	: 09/15/2009	: TERM ADJUSTMENT IN VIEW
Appliction No	: 11/490,339	: OF WYETH AND NOTICE OF INTENT TO
Filed	: 07/20/2006	: ISSUE CERTIFICATE OF CORRECTION
		:

The Request for Recalculation is **GRANTED** to the extent indicated.

The patent term adjustment has been determined to be **331** days. The USPTO will *sua sponte* issue a certificate of correction reflecting the amount of PTA days determined by the recalculation.

Prior to the issuance of the certificate of correction, the USPTO will afford patentee an opportunity to be heard and request reconsideration. Accordingly, patentee has **one month or thirty (30) days**, whichever is longer, to file a request for reconsideration of this patent term adjustment calculation. See 35 U.S.C. 154(b)(3)(B)(ii) and 37 CFR 1.322(a)(4). No extensions of time will be granted under 37 CFR 1.136.

Patentee should use document code PET.OP if electronically filing a request for reconsideration of this patent term adjustment calculation. The patentee must also include the information required by 37 CFR 1.705(b)(2) and the fee required by 37 CFR 1.18(e). If patentee does not file a timely request for reconsideration of this patent term adjustment calculation including the information required by 37 CFR 1.705(b)(2) and the fee required by 37 CFR 1.18(e), the USPTO will issue a certificate of correction reflecting the PTA determination noted above.

Patentee should be aware that in order to preserve the right to review in the United States District Court for the District of Columbia of the USPTO patent term adjustment determination, patentee must ensure that he or she also take the steps required under 35 U.S.C. 154(b)(4)(A) in a timely manner. Nothing in the request for recalculation should be construed as providing an alternative time frame for commencing a civil action under 35 U.S.C. 154(b)(4)(A).

Any questions concerning this decision should be directed to the Office of Patent Legal Administration at 571-272-7702.

UNITED STATES PATENT AND TRADEMARK OFFICE

UNITED STATES DEPARTMENT OF COMMERCE
United States Patent and Trademark Office
Address: COMMISSIONER FOR PATENTS
P.O. Box 1450
Alexandria, Virginia 22313-1450
www.uspto.gov

KIRTON AND MCCONKIE
60 EAST SOUTH TEMPLE,
SUITE 1800
SALT LAKE CITY, UT 84111

Mail Date: 04/21/2010

Applicant	: Wen-Lung Tseng	: DECISION ON REQUEST FOR
Patent Number	: 7630647	: RECALCULATION of PATENT
Issue Date	: 12/08/2009	: TERM ADJUSTMENT IN VIEW
Appliction No	: 11/490,350	: OF WYETH AND NOTICE OF INTENT TO
Filed	: 07/20/2006	: ISSUE CERTIFICATE OF CORRECTION
		:

The Request for Recalculation is **GRANTED** to the extent indicated.

The patent term adjustment has been determined to be **586** days. The USPTO will *sua sponte* issue a certificate of correction reflecting the amount of PTA days determined by the recalculation.

Prior to the issuance of the certificate of correction, the USPTO will afford patentee an opportunity to be heard and request reconsideration. Accordingly, patentee has **one month or thirty (30) days**, whichever is longer, to file a request for reconsideration of this patent term adjustment calculation. See 35 U.S.C. 154(b)(3)(B)(ii) and 37 CFR 1.322(a)(4). No extensions of time will be granted under 37 CFR 1.136.

Patentee should use document code PET.OP if electronically filing a request for reconsideration of this patent term adjustment calculation. The patentee must also include the information required by 37 CFR 1.705(b)(2) and the fee required by 37 CFR 1.18(e). If patentee does not file a timely request for reconsideration of this patent term adjustment calculation including the information required by 37 CFR 1.705(b)(2) and the fee required by 37 CFR 1.18(e), the USPTO will issue a certificate of correction reflecting the PTA determination noted above.

Patentee should be aware that in order to preserve the right to review in the United States District Court for the District of Columbia of the USPTO patent term adjustment determination, patentee must ensure that he or she also take the steps required under 35 U.S.C. 154(b)(4)(A) in a timely manner. Nothing in the request for recalculation should be construed as providing an alternative time frame for commencing a civil action under 35 U.S.C. 154(b)(4)(A).

Any questions concerning this decision should be directed to the Office of Patent Legal Administration at 571-272-7702.

UNITED STATES PATENT AND TRADEMARK OFFICE

UNITED STATES DEPARTMENT OF COMMERCE
United States Patent and Trademark Office
Address: COMMISSIONER FOR PATENTS
P.O. Box 1450
Alexandria, Virginia 22313-1450
www.uspto.gov

KIRTON AND MCCONKIE
60 EAST SOUTH TEMPLE,
SUITE 1800
SALT LAKE CITY, UT 84111

Mail Date: 04/21/2010

Applicant	: Jin-Liang Mao	: DECISION ON REQUEST FOR
Patent Number	: 7631136	: RECALCULATION of PATENT
Issue Date	: 12/08/2009	: TERM ADJUSTMENT IN VIEW
Appliction No	: 11/490,351	: OF WYETH AND NOTICE OF INTENT TO
Filed	: 07/20/2006	: ISSUE CERTIFICATE OF CORRECTION
		:

The Request for Recalculation is **GRANTED** to the extent indicated.

The patent term adjustment has been determined to be **650** days. The USPTO will *sua sponte* issue a certificate of correction reflecting the amount of PTA days determined by the recalculation.

Prior to the issuance of the certificate of correction, the USPTO will afford patentee an opportunity to be heard and request reconsideration. Accordingly, patentee has **one month or thirty (30) days**, whichever is longer, to file a request for reconsideration of this patent term adjustment calculation. See 35 U.S.C. 154(b)(3)(B)(ii) and 37 CFR 1.322(a)(4). No extensions of time will be granted under 37 CFR 1.136.

Patentee should use document code PET.OP if electronically filing a request for reconsideration of this patent term adjustment calculation. The patentee must also include the information required by 37 CFR 1.705(b)(2) and the fee required by 37 CFR 1.18(e). If patentee does not file a timely request for reconsideration of this patent term adjustment calculation including the information required by 37 CFR 1.705(b)(2) and the fee required by 37 CFR 1.18(e), the USPTO will issue a certificate of correction reflecting the PTA determination noted above.

Patentee should be aware that in order to preserve the right to review in the United States District Court for the District of Columbia of the USPTO patent term adjustment determination, patentee must ensure that he or she also take the steps required under 35 U.S.C. 154(b)(4)(A) in a timely manner. Nothing in the request for recalculation should be construed as providing an alternative time frame for commencing a civil action under 35 U.S.C. 154(b)(4)(A).

Any questions concerning this decision should be directed to the Office of Patent Legal Administration at 571-272-7702.

UNITED STATES PATENT AND TRADEMARK OFFICE

UNITED STATES DEPARTMENT OF COMMERCE
United States Patent and Trademark Office
Address: COMMISSIONER FOR PATENTS
P.O. Box 1450
Alexandria, Virginia 22313-1450
www.uspto.gov

ALSTON & BIRD LLP
BANK OF AMERICA PLAZA
101 SOUTH TRYON STREET, SUITE 4000
CHARLOTTE, NC 28280-4000

Mail Date: 04/21/2010

Applicant	: Yoshinobu Takahashi	: DECISION ON REQUEST FOR
Patent Number	: 7574779	: RECALCULATION of PATENT
Issue Date	: 08/18/2009	: TERM ADJUSTMENT IN VIEW
Appliction No	: 11/490,352	: OF WYETH AND NOTICE OF INTENT TO
Filed	: 07/20/2006	: ISSUE CERTIFICATE OF CORRECTION
		:

The Request for Recalculation is **GRANTED** to the extent indicated.

The patent term adjustment has been determined to be **435** days. The USPTO will *sua sponte* issue a certificate of correction reflecting the amount of PTA days determined by the recalculation.

Prior to the issuance of the certificate of correction, the USPTO will afford patentee an opportunity to be heard and request reconsideration. Accordingly, patentee has **one month or thirty (30) days**, whichever is longer, to file a request for reconsideration of this patent term adjustment calculation. See 35 U.S.C. 154(b)(3)(B)(ii) and 37 CFR 1.322(a)(4). No extensions of time will be granted under 37 CFR 1.136.

Patentee should use document code PET.OP if electronically filing a request for reconsideration of this patent term adjustment calculation. The patentee must also include the information required by 37 CFR 1.705(b)(2) and the fee required by 37 CFR 1.18(e). If patentee does not file a timely request for reconsideration of this patent term adjustment calculation including the information required by 37 CFR 1.705(b)(2) and the fee required by 37 CFR 1.18(e), the USPTO will issue a certificate of correction reflecting the PTA determination noted above.

Patentee should be aware that in order to preserve the right to review in the United States District Court for the District of Columbia of the USPTO patent term adjustment determination, patentee must ensure that he or she also take the steps required under 35 U.S.C. 154(b)(4)(A) in a timely manner. Nothing in the request for recalculation should be construed as providing an alternative time frame for commencing a civil action under 35 U.S.C. 154(b)(4)(A).

Any questions concerning this decision should be directed to the Office of Patent Legal Administration at 571-272-7702.

UNITED STATES PATENT AND TRADEMARK OFFICE

Commissioner for Patents
United States Patent and Trademark Office
P.O. Box 1450
Alexandria, VA 22313-1450
www.uspto.gov

IANDIORIO & TESKA
INTELLECTUAL PROPERTY LAW ATTORNEYS
260 BEAR HILL ROAD
WALTHAM MA 02451-1018

COPY MAILED

MAR 0 1 2007

OFFICE OF PETITIONS

In re Application of
Lai et al.
Application No. 11/490,354
Filed: July 20, 2006
Attorney Docket No. Pet-158J
Title: Treat Ball

DECISION REFUSING STATUS
UNDER 37 CFR 1.47(a)

This is in response to the petition filed December 11, 2006 and supplemented December 19, 2006 under 37 CFR. §1.47(a).

The petition under 37 CFR. §1.47(a) is **DISMISSED**.

Rule 47 applicant is given TWO MONTHS from the mailing date of this decision to reply, correcting the below-noted deficiencies. Any reply should be entitled "Request for Reconsideration of Petition Under 37 CFR. §1.47(a)," and should only address the deficiencies noted below, except that the reply may include an oath or declaration executed by the non-signing inventor. **Failure to respond will result in abandonment of the application**. Any extensions of time will be governed by 37 CFR. §1.136(a).

The above-identified application was filed on July 20, 2006, without an executed oath or declaration. Accordingly, on August 9, 2006, applicant was mailed a "Notice to File Missing Parts of Nonprovisional Application - Filing Date Granted," requiring for the purposes of this decision an executed oath or declaration in compliance with §1.63, and a surcharge for its late filing. This Notice set an extendable two-month period for reply of October 9, 2006.

In reply, applicant filed a petition, the surcharge for late filing of the declaration, and a partially executed declaration. To make the reply timely, a two (2) month extension of time was also submitted.

A grantable petition under 37 CFR. §1.47(a) requires: (1) proof that the non-signing inventor cannot be reached or refuses to sign the oath or declaration after having been presented with the application papers (specification, claims and drawings); (2) an acceptable oath or declaration in compliance with 35 U.S.C. §§115 and 116; (3) the

petition fee; and (4) a statement of the last known address of the non-signing inventor. The instant petition does not satisfy requirements (2) and (4) .

As to item (2), the declaration submitted is not in compliance with 37 CFR 1.63 . Rule 47 applicant failed to provide the citizenship of all of the inventors pursuant to 37 CFR 1.63 (a)(3). On renewed petition, a newly executed declaration is required.

As to item (4), in situations where an inventor does not execute the oath or declaration and the inventor is not deceased, such as in an application filed under 37 CFR 1.47, the inventor's most recent home address must be given to enable the Office to communicate directly with the inventor as necessary. See MPEP 605.03. The address provided in the declaration and in the petition appear to be a business address. The last known address must be supplied in an executed declaration or application data sheet (ADS).

Although petitioner has established that inventor Lai has refused to execute the application papers, petitioner needs to attempt to locate a home address where inventor Lai can be reached. This can be achieved by doing an internet search. To the extent a home address cannot be located a statement to that effect should be provided.

Further correspondence with respect to this matter should be addressed as follows:

By mail:	Mail Stop Petition Commissioner for Patents P.O. Box 1450 Alexandria, VA 22313-1450
By facsimile:	(571) 273-8300
By delivery service: (FedEx, UPS, DHL, etc.)	U.S. Patent and Trademark Office Customer Service Window, Randolph Building 401 Dulany Street Alexandria, VA 22314

Telephone inquiries related to this decision may be directed to the undersigned at (571) 272-3215.

Charlema R. Grant

Charlema R. Grant
Petitions Attorney
Office of Petitions

UNITED STATES PATENT AND TRADEMARK OFFICE

Commissioner for Patents
United States Patent and Trademark Office
P.O. Box 1450
Alexandria, VA 22313-1450
www.uspto.gov

TAYLOR & AUST, P.C.
P.O. BOX 560
142. S MAIN STREET
AVILLA, IN 46710

MAILED

FEB 24 2009

OFFICE OF PETITIONS

In re Application of :
Arved H. Westerkamp :
Application No. 11/490,369 : ON PETITION
Filed: July 20, 2006 :
Attorney Docket No. VOI0362.US :

This is a decision on the petition under 37 CFR 1.313(a), filed February 12, 2009, to withdraw the above-identified application from issue.

The petition is not signed by a registered patent attorney or patent agent of record. However, in accordance with 37 CFR 1.34, the signature of Mr. Kelly R. Bailey appearing on the correspondence shall constitute a representation to the United States Patent and Trademark Office that he is authorized to represent the particular party on whose behalf he acts.

The petition is **DISMISSED**.

Petitioner requests that the present application be withdrawn from issue for consideration of a petition to correct inventorship under 37 CFR 1.48(a) which is intended to be filed..

37 CFR 1.313(a) states, in part:

> Applications may be withdrawn from issue for further action at the initiative of the Office or upon petition by the applicant. To request that the Office withdraw an application from issue, applicant must file a petition under this section including the fee set forth in § 1.17(h) and a showing of good and sufficient reasons why withdrawal of the application from issue is necessary.

As such, a grantable petition requesting withdrawal of an application from issue must be accompanied by: (1) a showing of good and sufficient reasons why withdrawal of the application from issue is necessary; and (2) the requisite petition fee under 37 CFR 1.17(h). The petition fee of $130 has been paid.

However, the petition does not set forth good and sufficient reasons as to why withdrawal of the application from issue is necessary. The mere submission of a petition to correct inventorship under 37 CFR 1.48 does not make withdrawal of the application from issue necessary.

Telephone inquires related to this decision should be directed to the undersigned at (571) 272-3204.

/SDB/

Sherry D. Brinkley
Petitions Examiner
Office of Petitions

UNITED STATES PATENT AND TRADEMARK OFFICE

Commissioner for Patents
United States Patent and Trademark Office
P.O. Box 1450
Alexandria, VA 22313-1450
www.uspto.gov

Date : December 15, 2009

Patent No. :7557716
Inventor(s) :Morbitzer et al.
Issued :July 7, 2009
Title :METAL TUBE ASSEMBLY AND RADIO FREQUENCY IDENTIFICATION (RFID) TAG

Re: Request for Certificate of Correction

Consideration has been given your request for the issuance of a certificate of correction for the above-identified patent under the provisions of 37 CFR 1.322 and/or 1.323.

Assignees' names and addresses (assignment data) printed in a patent are based *solely* on information supplied in the appropriate space for identifying the assignment data, i.e., item 3 of the Fee(s) Transmittal Form PTOL-85B. After payment of the issue fee, correction of assignment data submitted on the PTOL-85B can only be done by Certificate of Correction under 37 CFR 1.323, with a request under 37 CFR 3.81(b).

A request for a patent to be corrected to state the name of the assignee must:

A. state that the assignment was submitted for recordation as set forth in 37 CFR 3.11 before issuance of the patent;

B. include a request for a certificate of correction under 37 CFR 1.323 along with the fee set forth in 37 CFR 1.20(a); and

C. include the processing fee set forth in 37 CFR 1.17(i).

If the request is granted, Certificates of Correction Branch will be notified that a Certificate of Correction may be issued.

See Manual of Patent Examining Procedure, Section 1481.01 (Rev. 3) (Oct. 2005).

Applicant has not included items A and or C above, accordingly, the request for Certificate of Correction to add or change the assignee data is dismissed.

Any request under 37 CFR 3.81(b) should be directed to the following address or facsimile number:

By mail: Mail Stop PETITIONS
Commissioner for Patents
Post Office Box 1450
Alexandria, VA 22313-1450

By hand:	Customer Service Window Randolph Building 401 Dulany Street Alexandria, VA 22314
By fax:	571-273-8300 ATTN: Office of Petitions
EFS web	uspto.gov/ebc/index.html (must be registered as an e-filer to submit responses) Technical Support 1-866-217-9197

Any inquiry concerning this communication should be directed to Ms. A. Green at (703) 756-1541.

Mary Diggs, Supervisor
Decisions & Certificates
of Correction Branch
(703) 756-1580 or (703) 756-1541

Volpe and Koenig, P.C
United Plaza
30 South 17th Street
Philadelphia, PA 19103-4009

/arg

UNITED STATES PATENT AND TRADEMARK OFFICE

Commissioner for Patents
United States Patent and Trademark Office
P.O. Box 1450
Alexandria, VA 22313-1450
www.uspto.gov

MAIL

JUL 08 2008

DIRECTOR'S OFFICE
TECHNOLOGY CENTER 2600

SHIMOKAJI & ASSOCIATES, P.C.
8911 RESEARCH DRIVE
IRVINE CA 92618

In re Application of
HIRASAKA, YOSHIHIRO
Application No. 11/490,435
Filed: July 20, 2006
Attorney Docket No. JP920050081US1

DECISION ON REQUEST TO PARTICIPATE IN PATENT PROSECUTION HIGHWAY PROGRAM AND PETITION TO MAKE SPECIAL UNDER 37 CFR 1.102(d)

This is a decision on the request to participate in the Patent Prosecution Highway (PPH) program and the petition under 37 CFR 1.102(d), filed June 20, 2008, to make the above-identified application special.

The request and petition are **GRANTED**.

A grantable request to participate in the PPH program and petition to make special require:

(1) The U.S. application must validly claim priority under 35 U.S.C. 119(a) to one or more applications filed in the JPO;
(2) Applicant must submit a copy of the allowable/patentable claim(s) from the JPO application(s) along with an English translation thereof and a statement that the English translation is accurate;
(3) All the claims in the U.S. application must sufficiently correspond or be amended to sufficiently correspond to the allowable/patentable claim(s) in the JPO application(s);
(4) Examination of the U.S. application has not begun;
(5) Applicant must submit a copy of all the office actions from each of the JPO application(s) containing the allowable/patentable claim(s) along with an English translation thereof and a statement that the English translation is accurate;
(6) Applicant must submit an IDS listing the documents cited by the JPO examiner in the JPO office action along with copies of documents except U.S. patents or U.S. patent application publications; and
(7) The required petition fee under 37 CFR 1.17(h).

The request to participate in the PPH program and petition comply with the above requirements. Accordingly, the above-identified application has been accorded "special" status.

Telephone inquiries concerning this decision should be directed to Kenneth Wieder at 571-272-2986.

All other inquiries concerning the examination or status of the application should be directed to Patent Application Information Retrieval (PAIR) system.

The application is being forwarded to the examiner for action on the merits commensurate with this decision.

Kenneth Wieder
Quality Assurance Specialist
Technology Center 2600
Communications

UNITED STATES PATENT AND TRADEMARK OFFICE

Commissioner for Patents
United States Patent and Trademark Office
P.O. Box 1450
Alexandria, VA 22313-1450
www.uspto.gov

Heller Ehrman, LLP
4350 La Jolla Village Drive
7th Floor
San Diego, CA 92122

COPY MAILED
OCT 01 2008

In re Application of	:	
Mark X. Sliwkowski et al.	:	
Application No. 11/490,438	:	DECISION ON PETITION
Filed: July 19, 2006	:	TO WITHDRAW
Attorney Docket No. 39766-0170A	:	FROM RECORD
	:	

This is a decision on the Request to Withdraw as attorney or agent under 37 C.F.R. § 1.36(b) or 37 C.F.R. § 10.40 filed August 20, 2008.

The request is **APPROVED**.

A grantable request to withdraw as attorney/agent of record must be signed by every attorney/agent seeking to withdraw or contain a clear indication that one attorney is signing on behalf of another/others. The Office requires the practitioner(s) requesting withdrawal to certify that he, she, or they have: (1) given reasonable notice to the client, prior to the expiration of the response period, that the practitioner(s) intends to withdraw from employment; (2) delivered to the client or a duly authorized representative of the client all papers and property (including funds) to which the client is entitled; and (3) notified the client of any responses that may be due and the time frame within which the client must respond, pursuant 37 CFR 10.40(c).

The request was signed by Leslie B. Overman, on behalf of all attorneys/agents associated with customer number 25213. All attorneys/agents associated with customer number 25213 have been withdrawn.

Applicant is reminded that there is no attorney of record at this time.

The request to change the correspondence of record is not acceptable as the requested correspondence address is not that of (1) the first named signing inventor; or (2) an intervening assignee of the entire interest under 37 C.F.R. 3.71. Accordingly, all correspondence will be mailed to the first signing inventor at the address noted on the oath and declaration. A courtesy copy of this decision will be mailed to address as indicated in the request to withdraw. If this firm would like to receive future correspondence, the proper power of attorney documents must be submitted or if an assignee has intervened compliance with 37 CFR 3.73(b) must be satisfied.

Telephone inquiries concerning this decision should be directed to Kimberly Inabinet at 571-272-4618.

Kimberly Inabinet
Petitions Examiner
Office of Petitions

cc: Mark X. Sliwkowski
42 Oak Creek Lane
San Carlos, CA 94070

cc: Goodwin Procter, LLP
Attn: Patent Administrator
135 Commonwealth Drive
Menlo Park, CA 94025-1105

UNITED STATES PATENT AND TRADEMARK OFFICE

UNITED STATES DEPARTMENT OF COMMERCE
United States Patent and Trademark Office
Address: COMMISSIONER FOR PATENTS
P.O. Box 1450
Alexandria, Virginia 22313-1450
www.uspto.gov

APPLICATION NUMBER	FILING OR 371(C) DATE	FIRST NAMED APPLICANT	ATTY. DOCKET NO./TITLE
11/490,438	07/19/2006	Mark X. Sliwkowski	39766-0170A

CONFIRMATION NO. 3391

POWER OF ATTORNEY NOTICE

25213
HELLER EHRMAN LLP
4350 La Jolla Village Drive, 7th Floor
San Diego, CA 92122

OC000000032361882

Date Mailed: 10/01/2008

NOTICE REGARDING CHANGE OF POWER OF ATTORNEY

This is in response to the Power of Attorney filed 08/20/2008.

- The withdrawal as attorney in this application has been accepted. Future correspondence will be mailed to the new address of record. 37 CFR 1.33.

/kainabinet/

Office of Data Management, Application Assistance Unit (571) 272-4000, or (571) 272-4200, or 1-888-786-0101

UNITED STATES PATENT AND TRADEMARK OFFICE

Commissioner for Patents
United States Patent and Trademark Office
P.O. Box 1450
Alexandria, VA 22313-1450
www.uspto.gov

COPY MAILED

JUN 25 2008

Womble Carlyle Sandridge & Rice, PLLC
Attn: Patent Docketing 32nd Floor
P.O. Box 7037
Atlanta, GA 30357-0037

In re Application of :
Klaus Rennebeck :
Application No. 11/490,466 : DECISION ON PETITION
Filed: July 20, 2006 : TO WITHDRAW
Attorney Docket No. H169 10360.1 : FROM RECORD
:

This is a decision on the Requests to Withdraw as attorney or agent under 37 C.F.R. § 1.36(b) or 37 C.F.R. § 10.40 filed February 15, 2008 and May 19, 2008.

The requests are **APPROVED**.

A grantable request to withdraw as attorney/agent of record must be signed by every attorney/agent seeking to withdraw or contain a clear indication that one attorney is signing on behalf of another/others. A request to withdraw will not be approved unless at least 30 (thirty) days would remain between the date of approval and the later of the expiration date of a time to file a response or the expiration date of the maximum time period which can be extended under 37 C.F.R. § 1.136(a).

The request was signed by James A. Witherspoon on behalf of all attorneys/agents associated with customer number 26158. All attorneys/agents of record associated with customer number 26158 have been withdrawn.

The correspondence address has been changed and is copied below.

Applicant is reminded that there is no attorney of record at this time.

Telephone inquires concerning this decision should be directed to Kimberly Inabinet at 571-272-4618.

Kimberly Inabinet
Petitions Examiner
Office of Petitions

cc: Dr. Klaus Rennebeck
Blumenstrasse 16
Wendlingen, Germany 73240

UNITED STATES PATENT AND TRADEMARK OFFICE

UNITED STATES DEPARTMENT OF COMMERCE
United States Patent and Trademark Office
Address: COMMISSIONER FOR PATENTS
P.O. Box 1450
Alexandria, Virginia 22313-1450
www.uspto.gov

APPLICATION NUMBER	FILING OR 371(C) DATE	FIRST NAMED APPLICANT	ATTY. DOCKET NO./TITLE
11/490,466	07/20/2006	Klaus Rennebeck	H169 10360.1

CONFIRMATION NO. 2369

26158
WOMBLE CARLYLE SANDRIDGE & RICE, PLLC
ATTN: PATENT DOCKETING 32ND FLOOR
P.O. BOX 7037
ATLANTA, GA 30357-0037

POWER OF ATTORNEY NOTICE

OC000000030613930

Date Mailed: 06/23/2008

NOTICE REGARDING CHANGE OF POWER OF ATTORNEY

This is in response to the Power of Attorney filed 02/15/2008.

- The withdrawal as attorney in this application has been accepted. Future correspondence will be mailed to the new address of record. 37 CFR 1.33.

/kainabinet/

Office of Data Management, Application Assistance Unit (571) 272-4000, or (571) 272-4200, or 1-888-786-0101

UNITED STATES PATENT AND TRADEMARK OFFICE

Commissioner for Patents
United States Patent and Trademark Office
P.O. Box 1450
Alexandria, VA 22313-1450
www.uspto.gov

ALSTON & BIRD LLP
BANK OF AMERICA PLAZA
101 SOUTH TRYON STREET, SUITE 4000
CHARLOTTE NC 28280-4000

MAILED

JUL 15 2010

OFFICE OF PETITIONS

In re Application of :
Luciana R. Bertolini et al. :
Application No. 11/490,474 : DECISION ON PETITION
Filed: July 20, 2006 : TO WITHDRAW
Attorney Docket No. **051113/313965** : FROM RECORD

This is a decision on the Request to Withdraw as attorney or agent of record under 37 CFR § 1.36(b), filed June 15, 2010.

The request is **NOT APPROVED**.

The request cannot be approved because the Office no longer accept address changes to a new practitioner/customer number or law firm filed with a request, absent the filing of a power of attorney to the new representative.

The Office will only accept correspondence address changes to the most current address information provided for the assignee of the entire interest *who properly became of record under 37 CFR 3.71* or, the most current address information provided for the first named inventor. 37 CFR 3.71(c) states:

> *An assignee becomes of record either in a national patent application or a reexamination proceeding by filing a statement in compliance with § 3.73(b) that is signed by a party who is authorized to act on behalf of the assignee.*

The assignee must establish its ownership of the patent to the satisfaction of the Director. In this regard, the statement under 37 CFR 3.73(b) must have either: (i) documentary evidence of a chain of title from the original owner to the assignee (*e.g.*, copy of an executed assignment), and a statement affirming that the documentary evidence of the chain of title from the original owner to the assignee was or concurrently is being submitted for recordation pursuant to § 3.11; or (ii) a statement specifying where documentary evidence of a chain of title from the original owner to the assignee is recorded in the assignment records of the Office (*e.g.*, reel and frame number).

All future communications from the Office will continue to be directed to the above-listed address until otherwise notified by applicant.

Telephone inquiries concerning this decision should be directed to JoAnne Burke at 571-272-4584.

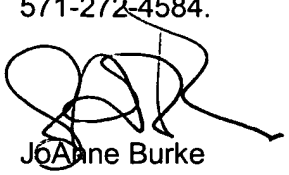

JoAnne Burke
Petitions Examiner
Office of Petitions

UNITED STATES PATENT AND TRADEMARK OFFICE

Commissioner for Patents
United States Patent and Trademark Office
P.O. Box 1450
Alexandria, VA 22313-1450
www.uspto.gov

STEVENS, DAVIS, MILLER & MOSHER, LLP
1615 L. STREET N.W.
SUITE 850
WASHINGTON DC 20036

MAIL

JUL 09 2007

DIRECTOR'S OFFICE
TECHNOLOGY CENTER 2600

In re Application of
Joachim LOHR, et al.
Application No. 11/490,485
Filed: July 21, 2006,
For: **HARQ PROCESS RESTRICTION AND TRANSMISSION OF NON-SCHEDULED CONTROL DATA VIA UPLINK CHANNELS**

DECISION ON PETITION
TO MAKE SPECIAL

This is a decision on the petition filed August 16, 2006 under Manual of Patent Examination Procedure §708.02, VIII requesting accelerated examination.

The petition under Manual of Patent Examination Procedure §708.02, VIII, must:
(1) be filed prior to receiving any examination by the examiner,
(2) be accompanied by the required fee- $130,
(3) the claims should be directed to a single invention (if it is determined that the claims pertain to more than one invention, then applicant will have to make an election without traverse or forfeit accelerated examination status),
(4) state that a pre-examination search was made, and fully discuss the search method employed, such as classes and subclasses searched, publications, Chemical abstracts, patents, etc. A search made by a foreign patent office satisfies this requirement,
(5) be accompanied by a copy of each of the references most closely related to the subject matter encompassed by the claims if said references are not already of record,
(6) fully discuss the references, pointing out with the particularity required by 37 C.F.R. §1.111 (b) and (c), how the claimed subject matter is patentable over the references.

The petitioner meets all the above-listed requirements. Accordingly, the petition is **GRANTED**.

The application will retain its special status throughout its entire prosecution, including any appeal to the Board of Patent Appeals and Interferences, subject only to diligent prosecution by the applicant. The application file is being forwarded to the examiner for appropriate action in due course.

Krista Zele
Special Program Examiner
Technology Center 2600
Communications

UNITED STATES PATENT AND TRADEMARK OFFICE

UNITED STATES DEPARTMENT OF COMMERCE
United States Patent and Trademark Office
Address: COMMISSIONER FOR PATENTS
P.O. Box 1450
Alexandria, Virginia 22313-1450
www.uspto.gov

APPLICATION NO.	FILING DATE	FIRST NAMED INVENTOR	ATTORNEY DOCKET NO.	CONFIRMATION NO.
90/007,703	09/01/2005	6609764	WCMI-0045	4117

26568 7590 09/19/2007

EXAMINER	

COOK, ALEX, MCFARRON, MANZO, CUMMINGS & MEHLER LTD
SUITE 2850
200 WEST ADAMS STREET
CHICAGO, IL 60606

ART UNIT	PAPER NUMBER

DATE MAILED: 09/19/2007

Please find below and/or attached an Office communication concerning this application or proceeding.

Copied from 90007703 on 01/22/2008

UNITED STATES PATENT AND TRADEMARK OFFICE

Commissioner for Patents
United States Patent and Trademark Office
P.O. Box 1450
Alexandria, VA 22313-1450
www.uspto.gov

9/19/07

THIRD PARTY REQUESTER'S CORRESPONDENCE ADDRESS

MARLIN R. SMITH
KONNEKER & SMITH PC
660 NORTH CENTRAL EXPRESSWAY, SUITE 230
PIANO, TX 75074

EX PARTE REEXAMINATION COMMUNICATION TRANSMITTAL FORM

REEXAMINATION CONTROL NO 90/007703
PATENT NO. 6,609,764
ART UNI 3993

Enclosed is a copy of the latest communication from the United States Patent and Trademark Office in the above identified ex parte reexamination proceeding (37 CFR 1.550(f)).

Where this copy is supplied after the reply by requester, 37 CFR 1.535, or the time for filing a replly has passed, no submission on behalf of the ex parte reexamination requester will be acknowledged or considered (37 CFR 1.550(g)).

Copied from 90007703 on 01/22/2008

UNITED STATES PATENT AND TRADEMARK OFFICE

Commissioner for Patents
United States Patent and Trademark Office
P.O. Box 1450
Alexandria, VA 22313-1450
www.uspto.gov

Michael J. McGee, Esq. (For Patent Owner)
COOK, ALEX, MCFARRON, MANZO, CUMMINGS & MEHLER LTD
Suite 2850
200 West Adams St.
Chicago, Illinois 60606

MAILED

SEP 19 2007

CENTRAL REEXAMINATION UNIT

Marlin R. Smith, Esq. (For Requester)
KONNEKER & SMITH PC
660 North Central Expressway
Suite 230
Plano, Texas 75074

In re Reissue Application of Dudding, et al.
Application No. 11/490,507
Filed: July 20, 2006
For: U.S. Patent No. 6,609,764

In re Dudding et al.
Reexamination Proceeding
Control No. 90/007703
Filed: September 1, 2005
For: U.S. Patent No. 6,609,764

DECISION, *SUA SPONTE*, TO MERGE REISSUE AND REEXAMINATION PROCEEDINGS

The above-captioned reissue and reexamination proceedings are before the Office of Patent Legal Administration for *sua sponte* consideration of whether the proceedings should be merged under 37 CFR 1.565(d) at this time.

REVIEW OF FACTS

1. U.S. Patent No. 6,609,764 (the '764 patent) issued on August 26, 2003, with 92 claims.

2. A request for reexamination of the '764 patent was filed by a third party requester on September 1, 2005, and was assigned control No. 90/007,703 (the '703 proceeding).

3. Reexamination was ordered for the '703 proceeding on November 4, 2005.

Copied from 90007703 on 01/22/2008

4. Notice of the filing of the request for reexamination was announced in the *Official Gazette* on November 29, 2005.

5. A patent owner's statement under 37 CFR 1.530 has not been received in the '703 proceeding, and the time for filing same has expired.

6. A non-final Office Action in the '703 proceeding was mailed on March 16, 2006.

7. The patent owner filed an amendment in the '703 proceeding on May 16, 2006.

8. An application for reissue of the '764 patent, assigned application No. 11/490,507 (the '507 application), was filed by the patent owner on July 20, 2006.

9. A paper was filed with the '507 application amending the claims in the same manner as was done in the '703 proceeding.

10. On July 20, 2006, the patent owner filed, in the '703 proceeding, a notice of concurrent proceeding under 37 CFR 1.565, informing the Office of the '507 reissue application.

11. The filing of the '507 reissue application was announced in the *Official Gazette* on September 5, 2006.

DISCUSSION REGARDING MERGER

Under 37 CFR 1.565(d):

> "If a reissue application and an *ex parte* reexamination proceeding on which an order pursuant to § 1.525 has been mailed are pending concurrently on a patent, a decision will normally be made to merge the two proceedings or to suspend one of the two proceedings."

As evidenced by the above review of facts, reissue application No. 11/490,507 and reexamination control No. 90/007,703 are currently pending. The order to reexamine has been mailed in the reexamination proceeding, and a notice of the reissue application has been published in the *Official Gazette*. Accordingly, a decision under 37 CFR 1.565(d) is timely.

The general policy of the Office is that a reissue application examination and a reexamination proceeding will not be conducted separately, and at the same time, as to a particular patent. The reason for this policy is to prevent inconsistent, and possibly

Copied from 90007703 on 01/22/2008

conflicting, amendments from being introduced into the two proceedings on behalf of the patent owner. Normally, the proceedings will be merged when it is desirable to do so in the interest of expediting the prosecution of both proceedings. In making a decision on whether or not to merge the two proceedings, consideration will be given to the status of each proceeding. See MPEP 2285.

In order to provide efficient and prompt handling of the reissue and reexamination proceedings and to prevent inconsistent, and possibly conflicting, amendments from being introduced on behalf of the patent owner, it is appropriate that the instant reissue and reexamination proceedings be merged and a joint examination be conducted. Accordingly, the examination of the reissue application and the reexamination proceeding will be merged in accordance with the decision set forth below.

It is to be noted, however, that the grant of merger of a reissue application and an *ex parte* reexamination proceeding under 37 CFR 1.565(d) **is discretionary**. *The present merger is not an assurance that, in a future similar situation, merger would be ordered.*

DECISION MERGING THE REISSUE AND REEXAMINATION PROCEEDINGS

I. Merger of Proceedings

The above-captioned reissue and reexamination proceedings are hereby merged. A joint examination will be conducted in accordance with the following guidelines and requirements.

II. Requirement for Same Amendments in Both Proceedings

1. The patent owner is required to maintain identical amendments in the reissue and the reexamination files for purposes of the merged proceeding. The maintenance of identical amendments in both files is required as long as the reissue and reexamination proceedings remain merged. See 37 CFR 1.565(d).

2. A review of the file for reexamination control No. 90/007,703 and the reissue application 11/490,507 shows that both contain: original claims 2-5, 7-9, 11-17, 19-24, 27-37, 39-44, 48, 50-52, 54, 59-65, 74, and 78-91; amended claims 1, 6, 10, 18, 25, 26, 38, 46, 47, 49, 53, 73, 75, and 77; canceled claims 45, 55-58, 66-72, 76, and 92; and new claims 93-101. The claims are identical in both number and text in both proceedings.

Copied from 90007703 on 01/22/2008

III. Conduct of the Merged Reissue Application Examination and Reexamination Proceedings

1. Upon receipt of the merged proceeding, the examiner should promptly prepare an Office action for the merged proceeding.

2. Because the statutory provisions for reissue application examination include, *inter alia*, provisions equivalent to 35 U.S.C. 305 relating to the conduct of *ex parte* reexamination proceedings, the merged examination will be conducted on the basis of the rules relating to the broader, reissue-application examination. The examiner will apply the reissue statute, rules, and case law to the merged proceeding. **However, periods for response should be set at TWO (2) months, to comply with the statutory requirement for special dispatch in *ex parte* reexamination (35 U.S.C. 305).**

3. Each Office action issued by the examiner will take the form of a *single action* which jointly applies to the reissue application and the reexamination proceeding. Each action will contain identifying data *for both of the cases*, i.e., the reissue application and the reexamination proceeding, and each action will be entered into both files (which will be maintained as separate files).

4. Any response by the applicant/patent owner must consist of a single response, with two copies being filed for entry of a copy into each of the two files, with each of the two copies bearing a signature. Any such response must contain identifying data *for both of the cases*, i.e., the reissue application and the reexamination proceeding. *Any such responses must be served on the requester*, who will also be sent copies of Office actions.

5. Pursuant to MPEP 2285, for a merged proceeding containing a reexamination proceeding and a reissue application:

> "Amendments should be submitted in accordance with the reissue practice under ... 37 CFR 1.173; see MPEP § 1453."

Thus, the filing of any amendments to the specification, claims, or drawings must comply with the provisions of 37 CFR 1.173, and with the guidelines of MPEP 1453. It is to be noted that 37 CFR 1.121 does not apply to amendments in a reissue application. Accordingly, clean copies of the amended claims are not required, *and such clean copies are not to be*

Copied from 90007703 on 01/22/2008

submitted. Instead, pursuant to 37 CFR 1.173(b)(2), amendments are to be presented via markings pursuant to 37 CFR 1.173(d), except that a claim is canceled by a statement canceling the claim, without presentation of the text of the claim.

Pursuant to 37 CFR 1.173(g), all amendments must be made relative to the patent specification, including the claims, and drawings, which are in effect as of the date of filing the reissue application. *Amendments are not to be made relative to previous amendments.* Thus, for amendments, all words not appearing in the patent are always underlined, and only words being deleted from the patent appear in brackets.

6. Where a paper is filed which requires payment of a fee (e.g., petition fee, excess claims fee, appeal fee, brief fee, oral hearing fee), only a single fee need be paid. For example, only one fee need be paid for any patent owner appeal brief, even though such a brief would relate to the merged multiple proceedings, and even though copies must be filed (as pointed out above) for each file of the merged proceeding.

7. Upon return of the present merged proceeding to the examiner, the examiner (a) will review the files to ensure that each file contains identical citations of prior patents and printed publications, and (b) will cite such documents as are necessary, as part of the next Office action, in order to place the files in that condition.

8. If the reissue application ultimately matures into a reissue patent, the reexamination proceeding shall be concluded by the grant of the reissue patent, and the reissue patent will serve as the certificate under 37 CFR 1.570. See MPEP 2285.

9. If the applicant/patent owner fails to file a timely and appropriate response to any Office action, the merged proceeding will be dissolved. The reissue application will be held abandoned. The reexamination prosecution will be terminated, and a reexamination certificate under 37 CFR 1.570 will be issued in accordance with the last action of the Office, unless further action in the reexamination proceeding is needed as a result of the difference in the rules relating to reexamination and reissue proceedings. If further action in the reexamination proceeding is needed, any grounds of rejection that are not applicable under reexamination would be withdrawn (e.g., based on public use or on sale), and any new grounds of rejection which are applicable under reexamination (e.g., improperly broadened claims) would be made by the examiner, upon dissolution of the merged proceeding. The existence of any questions/issues remaining which cannot be

Copied from 90007703 on 01/22/2008

considered under reexamination following the dissolution would be noted by the examiner as not being proper for consideration in reexamination pursuant to 37 CFR 1.552(c).

10. If the applicant/patent owner files an express abandonment of the reissue application pursuant to 37 CFR 1.138, the next Office action of the examiner will accept the express abandonment, dissolve the merged proceeding, and continue examination as to the reexamination proceeding. Such examination would be conducted as set forth in the immediately preceding paragraph.

CONCLUSION

1. Reissue application No. 11/490,507 and reexamination control No. 90/007,703 **are merged** into a single proceeding.

2. Jurisdiction over the merged reissue and reexamination proceeding is being transferred to Technology Center 3600, in which the reissue proceeding is assigned. The examiner assigned the merged proceeding is not to be one who was involved in any part of the examination of the '764 patent (e.g., by preparing/signing an action). See MPEP 2236.

3. All further examination in the merged proceeding should be conducted in accordance with Part III of this decision.

4. Telephone inquiries related to this decision should be directed to Caroline Dennison, Legal Advisor, at (571) 272-7729.

Kenneth M. Schor
Senior Legal Advisor
Office of Patent Legal Administration

cdd
DATE

9/18/07
C:\kiva\kenpetmerger\7703_Cls-the-same_Sua Sponte merge reexam + reissue.doc

Copied from 90007703 on 01/22/2008

UNITED STATES PATENT AND TRADEMARK OFFICE

Commissioner for Patents
United States Patent and Trademark Office
P.O. Box 1450
Alexandria, VA 22313-1450
www.uspto.gov

EMPK & SHILOH, LLP
116 JOHN ST.
SUITE 1201
NEW YORK NY 10038

COPY MAILED

JUL 24 2007

OFFICE OF PETITIONS

In re Application of :
SOFER, Yair et al. :
Application No. 11/490,539 : DECISION ON PETITION
Filed: July 19, 2006 : TO WITHDRAW
Attorney Docket No. **ELG-P-6415-US1C** : FROM RECORD
:

This is a decision on the Request to Withdraw as attorney or agent of record under 37 C.F.R. § 1.36(b), filed June 29, 2007.

The request is **NOT APPROVED**.

A grantable request to withdraw as attorney/agent of record must be signed by every attorney/agent seeking to withdraw or contain a clear indication that one attorney is signing on behalf of another/others. A request to withdraw will not be approved unless at least 30 (thirty) days would remain between the date of approval and the later of the expiration date of a time to file a response or the expiration date of the maximum time period which can be extended under 37 C.F.R. § 1.136(a).

The request to withdraw less than all attorneys appointed by customer number 43214 cannot be approved. The addition and/or deletion of a practitioner from the list of practitioners associated with a Customer Number should be made by submitting a "Request for Customer Number Data Change" (PTO/SB/124) which will result in the addition or deletion of such practitioner from the list of persons authorized to represent any applicant or assignee of the entire interest who appointed all of the practitioners associated with such Customer Number. See MPEP 403 Section I. Customer Number Practice.

All future communications from the Office will continue to be directed to the above-listed address until otherwise notified by applicant.

Telephone inquiries concerning this decision should be directed to Tredelle Jackson at 571-272- 2783.

Monica A. Graves
Petitions Examiner
Office of Petitions

UNITED STATES PATENT AND TRADEMARK OFFICE

UNITED STATES DEPARTMENT OF COMMERCE
United States Patent and Trademark Office
Address: COMMISSIONER FOR PATENTS
P.O. Box 1450
Alexandria, Virginia 22313-1450
www.uspto.gov

APPLICATION NO.	FILING DATE	FIRST NAMED INVENTOR	ATTORNEY DOCKET NO.	CONFIRMATION NO.
11/490,567	07/20/2006	Jeffrey A. Nielsen	200507655-1	2894

7590 04/14/2008

HEWLETT PACKARD COMPANY
P O BOX 272400, 3404 E. HARMONY ROAD
INTELLECTUAL PROPERTY ADMINISTRATION
FORT COLLINS, CO 80527-2400

EXAMINER	
TENTONI, LEO B	

ART UNIT	PAPER NUMBER
1791	

NOTIFICATION DATE	DELIVERY MODE
04/14/2008	ELECTRONIC

DECISION GRANTING PETITION UNDER 37 CFR 1.138(d)

The declaration of express abandonment is recognized

This is in response to the petition under 37 CFR 1.138(d), requesting for a refund of any previously paid search fee and excess claims fee in the above-identified application.

The petition is granted.

The express abandonment is recognized. Any previously paid search fee and excess claims fee are hereby refunded.

Telephone inquiries should be directed to the Office of Data Management at (571) 272-4200.

Tom Farmer

Patent Publication Branch
Office of Data Management

Adjustment date: 04/15/2008 DTERRY
07/25/2006 HMARZI1 00000023 11490567
02 FC:1111 500.00 CR 082025
04 FC:1202 150.00 CR

UNITED STATES PATENT AND TRADEMARK OFFICE

Commissioner for Patents
United States Patent and Trademark Office
P.O. Box 1450
Alexandria, VA 22313-1450
www.uspto.gov

HEWLETT PACKARD COMPANY
P O BOX 272400, 3404 E. HARMONY ROAD
INTELLECTUAL PROPERTY ADMINISTRATION
FORT COLLINS CO 80527-2400

COPY MAILED

APR 2 9 2008

OFFICE OF PETITIONS

In re Application of	:	
David A. Rehmann, et al.	:	
Application No. 11/490,577	:	DECISION GRANTING PETITION
Filed: July 21, 2006	:	UNDER 37 CFR 1.313(c)(2)
Attorney Docket No. 200600890-1	:	

This is a decision on the petition under 37 CFR 1.313(c)(2), filed April 23, 2008, to withdraw the above-identified application from issue after payment of the issue fee.

The petition is **GRANTED**.

The above-identified application is withdrawn from issue for consideration of a submission under 37 CFR 1.114 (request for continued examination). *See* 37 CFR 1.313(c)(2).

Petitioner is advised that the issue fee paid on February 22, 2008 cannot be refunded. If, however, this application is again allowed, petitioner may request that it be applied towards the issue fee required by the new Notice of Allowance.[1]

Telephone inquiries should be directed to Terri Williams at (571) 272-2991.

This application is being referred to Technology Center AU 2819 for processing of the request for continued examination under 37 CFR 1.114 and for consideration of the concurrently filed information disclosure statement.

Terri Williams
Petitions Examiner
Office of Petitions

[1] *The request to apply the issue fee to the new Notice may be satisfied by completing and returning the new Part B – Fee(s) Transmittal Form (along with any balance due at the time of submission). Petitioner is advised that the Issue Fee Transmittal Form must be completed and timely submitted to avoid abandonment of the application.*

UNITED STATES PATENT AND TRADEMARK OFFICE

Commissioner for Patents
United States Patent and Trademark Office
P.O. Box 1450
Alexandria, VA 22313-1450
www.uspto.gov

JONATHAN CLAYPOOL
SUITE 30
625 WEST KATELLA AVENUE
SEATTLE WA 98109

COPY MAILED

MAY 2 / 2008

OFFICE OF PETITIONS

In re Application of :
Xiyu **JIA** :
Application No. 11/490,583 : DECISION ON PETITION
Filed: July 22, 2006 :
Attorney Docket No. **ZRC-9** :

This is a decision on the petition under the unintentional provisions of 37 CFR 1.137(b), filed December 17, 2007, to revive the above-identified application.

The petition is **GRANTED**.

The application became abandoned for failure to reply in a timely manner to the Restriction Requirement, mailed April 24, 2007, which set a shortened statutory period for reply of one (1) month or thirty (30) days (whichever is later). No extensions of time under the provisions of 37 CFR 1.136(a) were obtained. Accordingly, the application became abandoned on July 25, 2007.

The petition satisfies the requirements of 37 CFR 1.137(b) in that petitioner has supplied (1) the reply in the form of a an election, (2) the petition fee of $770, and (3) a proper statement of unintentional delay. Accordingly, the reply to the Restriction requirement of April 24, 2007, is accepted as having been unintentionally delayed.

An extension of time under 37 CFR 1.136 must be filed prior to the expiration of the maximum extendable period for reply. See In re Application of S., 8 USPQ2d 1630, 1631 (Comm'r Pats. 1988). Since the $1115 extension of time fee submitted with the petition on December 17, 2007 was subsequent to the maximum extendable period for reply, this fee is unnecessary and will be credited to petitioner's deposit account.

Telephone inquiries concerning this decision should be directed to Tredelle Jackson at (571) 272-2783.

This application is being referred to Technology Center AU 1637 for appropriate action on the concurrently filed amendment.

David Bucci
Petitions Examiner
Office of Petitions

cc: **JOHNATHAN A. CLAYPOOL**
107 1ST AVENUE N412
SEATTLE, WA 98109

UNITED STATES PATENT AND TRADEMARK OFFICE

Commissioner for Patents
United States Patent and Trademark Office
P.O. Box 1450
Alexandria, VA 22313-1450
www.uspto.gov

CHRISTIE PARKER & HALE, LLP
P.O. BOX 7068
PASADENA, CA 91109-7068

COPY MAILED

JAN 0 3 2007

OFFICE OF PETITIONS

In re Application of	:	
Thomas Menzi et al	:	
Application No. 11/490,602	:	DECISION ON PETITION
Filed: July 20, 2006	:	TO MAKE SPECIAL UNDER
Attorney Docket No. 57930/K163	:	37 CFR 1.102(d)
	:	

This is a decision on the petition under 37 CFR §1.102(d), filed July 20, 2006, to make the above-identified application special based on actual infringement as set forth in M.P.E.P. § 708.02, Section II.

The petition is **GRANTED.**

A grantable petition to make an application special under 37 CFR §1.102(d) and MPEP §708.02, Section II: Infringement, must be accompanied by the required fee pursuant to 37 CFR 1.17(h) and a statement by the applicant, assignee, or attorney/agent registered to practice before the office alleging:

> (A) That there is an infringing device or product actually on the market or method in use;
>
> (B) That a rigid comparison of the alleged infringing device, product, or method with the claims of the application has been made, and that, in his or her opinion, some of the claims are unquestionably infringed; and
>
> (C) That he or she has made or caused to be made a careful and thorough search of the prior art or has a good knowledge of the pertinent prior art.
>
> Applicant must provide one copy of each of the references deemed most closely related to the subject matter encompassed by the claims if said references are not already of record.

The petition complies with all the above stated requirements. Accordingly, the above-identified application has been accorded "special" status.

Telephone inquiries concerning this decision should be directed to Irvin Dingle at 571-272-3210.

All other inquiries concerning either the examination or status of the application should be directed to the Technology Center.

The application is being forwarded to the Technology Center Art Unit 3767 for action on the merits commensurate with this decision.

for Denise Pothier
Petitions Examiner
Office of Petitions

UNITED STATES PATENT AND TRADEMARK OFFICE

Commissioner for Patents
United States Patent and Trademark Office
P.O. Box 1450
Alexandria, VA 22313-1450
www.uspto.gov

COPY MAILED

OCT 2 9 2009

OFFICE OF PETITIONS

JAFARI LAW GROUP, P.C.
801 N. PARKCENTER DRIVE, SUITE 220
SANTA ANA, CA 92705

In re Application of :
William B. GRAHAM, et *al.* :
Application No. 11/490,605 : DECISION ON PETITION TO
Filed: July 20, 2006 : WITHDRAW FROM RECORD
Attorney Docket No. :

This is a decision on the Request to Withdraw as attorney or agent of record under 37 C.F.R. § 1.36(b), filed October 5, 2009.

The request is **APPROVED**.

A grantable request to withdraw as attorney/agent of record must be signed by every attorney/agent seeking to withdraw or contain a clear indication that one attorney is signing on behalf of another/others.

The request was signed by David V. Jafari, the sole attorney of record. David V. Jafari has been withdrawn as attorney or agent of record. Applicant is reminded that there is no attorney of record at this time.

All future communications from the Office will be directed to the first named signing inventor at the address below until otherwise properly notified by the applicant.

There is an outstanding non-final Office action mailed July 31, 2009 that requires a reply from the applicant.

Telephone inquiries concerning this decision should be directed to the undersigned at 571-272-7253.

/Monica A. Graves/
Petitions Examiner, Office of Petitions

cc: **WILLIAM B. GRAHAM**
1108 BAJA STREET
LAGUNA BEACH, CA 92651

UNITED STATES PATENT AND TRADEMARK OFFICE

COMMISSIONER FOR PATENTS
UNITED STATES PATENT AND TRADEMARK OFFICE
P.O. BOX 1450
ALEXANDRIA, VA 22313-1450
www.uspto.gov

Paper No.

FANN-MKE C/O
FOLEY & LARDNER LLP
777 EAST WISCONSIN AVENUE
MILWAUKEE WI 53202-5306

MAILED

JUN 23 2010

OFFICE OF PETITIONS

In re Application of :
Williams et al. :
Application No. 11/490,614 : ON APPLICATION FOR
Filed: July 21, 2006 : PATENT TERM ADJUSTMENT
Atty Docket No. 037607-0372 :
Title: COMPUTERIZED SYSTEMS :
AND METHODS FOR FACILITATING :
THE FLOW OF CAPITAL THROUGH :
THE HOUSING FINANCE INDUSTRY :

This is in response to the "REQUEST FOR RECONSIDERATION OF PATENT TERM ADJUSTMENT UNDER 37 C.F.R. §1.705," filed February 3, 2010. Applicant submits that the correct patent term adjustment to be indicated on the patent is four hundred and eighty-one (481) days, not four hundred and one (401) days as calculated by the Office as of the mailing of the initial determination of patent term adjustment. Applicant requests this correction solely on the basis that the Office will take in excess of three years to issue this patent.

As the instant application for patent term adjustment requests reconsideration of the patent term adjustment as it relates to the Office's failure to issue the patent within 3 years of the filing date, the application for patent term adjustment under 37 CFR 1.705(b) is **DISMISSED as PREMATURE**.

Knowledge of the actual date the patent issues is required to calculate the amount, if any, of additional patent term patentee is entitled to for Office failure to issue the patent within 3 years. See § 1.702(b). (This is true even where a request for continued examination (RCE) was filed). The computer will not undertake the § 1.702(b) calculation until the actual date of issuance of the patent has been determined. Likewise, the computer will not calculate any further Office delay under

§ 1.702(a)(4) or applicant delay under § 1.704(c)(10) until the actual date of issuance of the patent has been determined. As such, the Office cannot make a determination on the correctness of the patent term adjustment until the patent has issued.

Requesting reconsideration of the patent term adjustment to be indicated on the patent under 37 CFR 1.705(b) based on the initial determination of patent term adjustment and a projected issuance date of the patent (or even the filing date of the request for continued examination) is premature. Accordingly, it is appropriate to dismiss as premature such a request.

Rather than file an application for patent term adjustment under 37 CFR 1.705(b) contesting the 37 CFR 1.702(b) calculation at the time of the mailing of the notice of allowance, applicant is advised that they may wait until the time of the issuance of the patent and file a request for reconsideration of the patent term adjustment pursuant to 37 CFR 1.705(d). As the USPTO does not calculate the amount of time earned pursuant to 37 CFR 1.702(b) until the time of the issuance of the patent, the Office will consider any request for reconsideration of the patent term adjustment due to an error in the calculation of 37 CFR 1.702(b) to be timely if the request for reconsideration is filed within two months of the issuance of the patent. However, as to all other bases for contesting the initial determination of patent term adjustment received with the notice of allowance, applicant must timely file an application for patent term adjustment prior to the payment of the issue fee.[1]

The Office acknowledges submission of the $200.00 fee set forth in 37 CFR 1.18(e). No additional fees are required.

Any request for reconsideration of the patent term adjustment indicated on the patent must be timely filed within 2 months

---

[1] For example, if applicant disputes both the calculation of patent term adjustment under 37 CFR 1.702(a)(1) for Office failure to mail a first Office action or notice of allowance not later than fourteen months after the date on which the application was filed and under 37 CFR 1.702(b) for Office failure to issue a patent within three years of the actual filing date of the application, then applicant must still timely file an application for patent term adjustment prior to the payment of the issue fee to contest the calculation of Office delay in issuing a first Office action or notice of allowance. See 37 CFR 1.705(b) and 35 U.S.C. 154(b)(3)(B). A dispute as to the calculation of the §1.702(a)(1) period raised on request for reconsideration of patent term adjustment under 37 CFR 1.705(d) will be dismissed as untimely filed.

after issuance pursuant to 37 CFR 1.705(d) and must include payment of the required fee under 37 CFR 1.18(e).

The Office of Data Management has been advised of this decision. This application is being referred to the Office of Data Management for issuance of the patent.

Telephone inquiries regarding this decision should be directed to Senior Attorney Paul Shanoski at (571) 272-3225.

Anthony Knight
Director
Office of Petitions

UNITED STATES PATENT AND TRADEMARK OFFICE

UNITED STATES DEPARTMENT OF COMMERCE
United States Patent and Trademark Office
Address: COMMISSIONER FOR PATENTS
P.O. Box 1450
Alexandria, Virginia 22313-1450
www.uspto.gov

KNOBBE MARTENS OLSON & BEAR LLP
2040 MAIN STREET
FOURTEENTH FLOOR
IRVINE, CA 92614

Mail Date: 04/20/2010

Applicant	: David H. Wells	: DECISION ON REQUEST FOR
Patent Number	: 7601608	: RECALCULATION of PATENT
Issue Date	: 10/13/2009	: TERM ADJUSTMENT IN VIEW
Appliction No	: 11/490,619	: OF WYETH AND NOTICE OF INTENT TO
Filed	: 07/21/2006	: ISSUE CERTIFICATE OF CORRECTION
		:

The Request for Recalculation is **GRANTED** to the extent indicated.

The patent term adjustment has been determined to be **68** days. The USPTO will *sua sponte* issue a certificate of correction reflecting the amount of PTA days determined by the recalculation.

Prior to the issuance of the certificate of correction, the USPTO will afford patentee an opportunity to be heard and request reconsideration. Accordingly, patentee has **one month or thirty (30) days**, whichever is longer, to file a request for reconsideration of this patent term adjustment calculation. See 35 U.S.C. 154(b)(3)(B)(ii) and 37 CFR 1.322(a)(4). No extensions of time will be granted under 37 CFR 1.136.

Patentee should use document code PET.OP if electronically filing a request for reconsideration of this patent term adjustment calculation. The patentee must also include the information required by 37 CFR 1.705(b)(2) and the fee required by 37 CFR 1.18(e). If patentee does not file a timely request for reconsideration of this patent term adjustment calculation including the information required by 37 CFR 1.705(b)(2) and the fee required by 37 CFR 1.18(e), the USPTO will issue a certificate of correction reflecting the PTA determination noted above.

Patentee should be aware that in order to preserve the right to review in the United States District Court for the District of Columbia of the USPTO patent term adjustment determination, patentee must ensure that he or she also take the steps required under 35 U.S.C. 154(b)(4)(A) in a timely manner. Nothing in the request for recalculation should be construed as providing an alternative time frame for commencing a civil action under 35 U.S.C. 154(b)(4)(A).

Any questions concerning this decision should be directed to the Office of Patent Legal Administration at 571-272-7702.

UNITED STATES PATENT AND TRADEMARK OFFICE

Commissioner for Patents
United States Patent and Trademark Office
P.O. Box 1450
Alexandria, VA 22313-1450
www.uspto.gov

APPLICATION NUMBER	FILING/RECEIPT DATE	FIRST NAMED APPLICANT	ATTORNEY DOCKET NUMBER
11/490,622	07/21/2006	Garo J. Derderian	M122-3335

WELLS ST. JOHN P.S.
601 W. FIRST AVENUE, SUITE 1300
SPOKANE WA 99201

DATE MAILED: August 16, 2007

DECISION GRANTING PETITION UNDER 37 CFR 1.138(d)
The declaration of express abandonment is recognized

This is in response to the petition under 37 CFR 1.138(d) filed August 10, 2007, requesting for a refund of any previously paid search fee and excess claims fee in the above-identified application.

The petition is granted.

The express abandonment is recognized. Any previously paid search fee and excess claims fee are hereby refunded.

Any inquiries concerning this decision should be directed to the Pre-Grant Publication Division at (703) 605-4283.

Barbara J. Debnam
Pre-Grant Publication Division

UNITED STATES PATENT AND TRADEMARK OFFICE

UNITED STATES DEPARTMENT OF COMMERCE
United States Patent and Trademark Office
Address: COMMISSIONER FOR PATENTS
P.O. Box 1450
Alexandria, Virginia 22313-1450
www.uspto.gov

CARR & FERRELL LLP
2200 GENG ROAD
PALO ALTO, CA 94303

Mail Date: 04/21/2010

Applicant	: Lindor Eric Henrickson	: DECISION ON REQUEST FOR
Patent Number	: 7587694	: RECALCULATION of PATENT
Issue Date	: 09/08/2009	: TERM ADJUSTMENT IN VIEW
Appliction No	: 11/490,658	: OF WYETH AND NOTICE OF INTENT TO
Filed	: 07/21/2006	: ISSUE CERTIFICATE OF CORRECTION
		:

The Request for Recalculation is **GRANTED** to the extent indicated.

The patent term adjustment has been determined to be **177** days. The USPTO will *sua sponte* issue a certificate of correction reflecting the amount of PTA days determined by the recalculation.

Prior to the issuance of the certificate of correction, the USPTO will afford patentee an opportunity to be heard and request reconsideration. Accordingly, patentee has **one month or thirty (30) days**, whichever is longer, to file a request for reconsideration of this patent term adjustment calculation. See 35 U.S.C. 154(b)(3)(B)(ii) and 37 CFR 1.322(a)(4). No extensions of time will be granted under 37 CFR 1.136.

Patentee should use document code PET.OP if electronically filing a request for reconsideration of this patent term adjustment calculation. The patentee must also include the information required by 37 CFR 1.705(b)(2) and the fee required by 37 CFR 1.18(e). If patentee does not file a timely request for reconsideration of this patent term adjustment calculation including the information required by 37 CFR 1.705(b)(2) and the fee required by 37 CFR 1.18(e), the USPTO will issue a certificate of correction reflecting the PTA determination noted above.

Patentee should be aware that in order to preserve the right to review in the United States District Court for the District of Columbia of the USPTO patent term adjustment determination, patentee must ensure that he or she also take the steps required under 35 U.S.C. 154(b)(4)(A) in a timely manner. Nothing in the request for recalculation should be construed as providing an alternative time frame for commencing a civil action under 35 U.S.C. 154(b)(4)(A).

Any questions concerning this decision should be directed to the Office of Patent Legal Administration at 571-272-7702.

UNITED STATES PATENT AND TRADEMARK OFFICE

UNITED STATES DEPARTMENT OF COMMERCE
United States Patent and Trademark Office
Address: COMMISSIONER FOR PATENTS
P.O. Box 1450
Alexandria, Virginia 22313-1450
www.uspto.gov

VISTA IP LAW GROUP LLP
1885 Lundy Avenue
Suite 108
SAN JOSE, CA 95131

Mail Date: 04/26/2010

Applicant	: Arnold Ginetti	: DECISION ON REQUEST FOR
Patent Number	: 7634743	: RECALCULATION of PATENT
Issue Date	: 12/15/2009	: TERM ADJUSTMENT IN VIEW
Appliction No	: 11/490,668	: OF WYETH AND NOTICE OF INTENT TO
Filed	: 07/21/2006	: ISSUE CERTIFICATE OF CORRECTION
		:

The Request for Recalculation is **GRANTED** to the extent indicated.

The patent term adjustment has been determined to be **573** days. The USPTO will *sua sponte* issue a certificate of correction reflecting the amount of PTA days determined by the recalculation.

Prior to the issuance of the certificate of correction, the USPTO will afford patentee an opportunity to be heard and request reconsideration. Accordingly, patentee has **one month or thirty (30) days**, whichever is longer, to file a request for reconsideration of this patent term adjustment calculation. See 35 U.S.C. 154(b)(3)(B)(ii) and 37 CFR 1.322(a)(4). No extensions of time will be granted under 37 CFR 1.136.

Patentee should use document code PET.OP if electronically filing a request for reconsideration of this patent term adjustment calculation. The patentee must also include the information required by 37 CFR 1.705(b)(2) and the fee required by 37 CFR 1.18(e). If patentee does not file a timely request for reconsideration of this patent term adjustment calculation including the information required by 37 CFR 1.705(b)(2) and the fee required by 37 CFR 1.18(e), the USPTO will issue a certificate of correction reflecting the PTA determination noted above.

Patentee should be aware that in order to preserve the right to review in the United States District Court for the District of Columbia of the USPTO patent term adjustment determination, patentee must ensure that he or she also take the steps required under 35 U.S.C. 154(b)(4)(A) in a timely manner. Nothing in the request for recalculation should be construed as providing an alternative time frame for commencing a civil action under 35 U.S.C. 154(b)(4)(A).

Any questions concerning this decision should be directed to the Office of Patent Legal Administration at 571-272-7702.

UNITED STATES PATENT AND TRADEMARK OFFICE

Commissioner for Patents
United States Patent and Trademark Office
P.O. Box 1450
Alexandria, VA 22313-1450
www.uspto.gov

HEWLETT PACKARD COMPANY
P O BOX 272400, 3404 E. HARMONY ROAD
INTELLECTUAL PROPERTY ADMINISTRATION
FORT COLLINS CO 80527-2400

RECEIVED

DEC 31 2008

OFFICE OF PETITIONS

In re Application of :
Eric Hoarau, et. al. :
Application No. 11/490,687 : DECISION ON PETITION
Filed: July 21, 2006 :
Attorney Docket No. 200601738-1 :

This is a decision on the petitions under the unintentional provisions of 37 CFR 1.137(b), filed December 16, 2008, to revive the above-identified application.

The petition is **GRANTED**.

The application became abandoned for failure to reply in a timely manner to the Non-Final Office Action mailed, May 7, 2008, which set a shortened statutory period for reply of three (3) months. No extensions of time under the provisions of 37 CFR 1.136 (a) were obtained. Accordingly, the application became abandoned on August 8, 2008.

The petition satisfies the requirements of 37 CFR 1.137(b) in that petitioner has supplied (1) the reply in the form of an Amendment, (2) the petition fee of $1620, and (3) a proper statement of unintentional delay.

As requested, the petition fee of $1620 will be charged to petitioner's deposit account.

Telephone inquiries concerning this decision should be directed to Denise Williams at (571) 272-8930.

This application is being referred to Technology Center AU 3725 for appropriate action by the Examiner in the normal course of business on the reply received.

Brian W. Brown
Petitions Examiner
Office of Petitions

UNITED STATES PATENT AND TRADEMARK OFFICE

Commissioner for Patents
United States Patent and Trademark Office
P.O. Box 1450
Alexandria, VA 22313-1450
www.uspto.gov

Paper No.

Joseph T. Guy Ph.D.
Nexsen Pruet Jacobs & Pollard LLP
201 W. McBee Avenue
Greenville SC 29603

COPY MAILED

APR 17 2008

OFFICE OF PETITIONS

In re Application of	:	
Luc Struye et al.	:	
Application No. 11/490,689	:	DECISION ON PETITION
Filed: July 21, 2006	:	PURSUANT TO
Attorney Docket No.: 27500-277	:	37 C.F.R. § 1.137(B)
Title: STIMULABLE PHOSPHOR	:	
SCREENS OR PANELS AND	:	
MANUFACTURING CONTROL THEREOF	:	

This is a decision on the petition filed August 20, 2007, pursuant to 37 C.F.R. § 1.137(b) to revive the above-identified application.

The petition pursuant to 37 C.F.R. § 1.137(b) is **GRANTED**.

The above-identified application became abandoned for failure to submit corrected drawings in a timely manner in reply to the Notice of Allowance and Issue Fee Due, mailed April 10, 2007, which set a shortened statutory period for reply of three months. The issue and publication fees were timely received on May 2, 2007, however the drawings were not included with this submission. No extensions of time are permitted for transmitting formal drawings[1]. Accordingly, this application became abandoned on July 11, 2007. A Notice of Abandonment was mailed on August 6, 2007.

A grantable petition pursuant to 37 C.F.R § 1.137(b) must be accompanied by:

1 See MPEP § 710.02(e).

(1) The reply required to the outstanding Office action or notice, unless previously filed;
(2) The petition fee as set forth in 37 C.F.R § 1.17(m);
(2) A statement that the entire delay in filing the required reply from the due date for the reply until the filing of a grantable petition pursuant to this paragraph was unintentional. The Commissioner may require additional information where there is a question whether the delay was unintentional, and;
(3) Any terminal disclaimer (and fee as set forth in 37 C.F.R § 1.20(d)) required pursuant to paragraph (d) of this section.

37 C.F.R. § 1.137(b)(3) requires a statement that the entire delay in filing the required reply from the due date for the reply until the filing of a grantable petition pursuant to 37 C.F.R. § 1.137(b) was unintentional. Since the statement contained in this petition varies from the language required by 37 C.F.R. § 1.137(b)(3), the statement contained in this petition is being construed as the statement required by 37 C.F.R. § 1.137(b)(3) and Petitioner must notify the Office if this is not a correct interpretation of the statement contained in this petition.

With this petition, Petitioner has submitted a corrected drawing, the petition fee, and a statement that is being construed as the proper statement of unintentional delay.

As such, the first three requirements of Rule 1.137(b) have been met. The fourth requirement is not applicable, as a terminal disclaimer is not required.

It is noted that the address listed on the petition differs from the address of record. The application file does not indicate a change of correspondence address has been filed in this case, although the address given on the petition differs from the address of record. If Petitioner desires to receive future correspondence regarding this application, the change of correspondence address must be submitted. A courtesy copy of this decision will be mailed to Petitioner. However, all future correspondence will be directed to the address of record until such time as appropriate instructions are received to the contrary. Petitioner will not receive future correspondence related to this application unless Change of Correspondence Address, Patent Form (PTO/SB/122) is submitted for the above-identified application. For Petitioner's convenience, a blank Change of Correspondence Address, Patent Form (PTO/SB/122), may be found at http://www.uspto.gov/web/forms/sb0122.pdf.

The Office of Patent Publication will be notified of this decision so that the present application can be processed into a patent.

Telephone inquiries regarding *this decision* should be directed to the undersigned at (571) 272-3225[2]. All other inquiries concerning the status of the application should be directed to the Office of Patent Publication at 571-272-4200.

/Paul Shanoski/
Paul Shanoski
Senior Attorney
Office of Petitions

cc: Joseph T. Guy Ph.D.
Nexsen Pruet Jacobs & Pollard LLP
P.O. Box 10648
Greenville SC 29603

2 Petitioner will note that all practice before the Office should be in writing, and the action of the Office will be based exclusively on the written record in the Office. See 37 C.F.R. § 1.2. As such, Petitioner is reminded that no telephone discussion may be controlling or considered authority for any further action(s) of Petitioner.

UNITED STATES PATENT AND TRADEMARK OFFICE

UNITED STATES DEPARTMENT OF COMMERCE
United States Patent and Trademark Office
Address: COMMISSIONER FOR PATENTS
P.O. Box 1450
Alexandria, Virginia 22313-1450
www.uspto.gov

James E. Lake
Wells St. John P.S.
Suite 1300
601 W First Avenue
Spokane, WA 99201-3828

Mail Date: 04/21/2010

Applicant	: Alex Paterson	: DECISION ON REQUEST FOR
Patent Number	: 7605034	: RECALCULATION of PATENT
Issue Date	: 10/20/2009	: TERM ADJUSTMENT IN VIEW
Appliction No	: 11/490,707	: OF WYETH AND NOTICE OF INTENT TO
Filed	: 07/21/2006	: ISSUE CERTIFICATE OF CORRECTION
		:

The Request for Recalculation is **GRANTED** to the extent indicated.

The patent term adjustment has been determined to be **59** days. The USPTO will *sua sponte* issue a certificate of correction reflecting the amount of PTA days determined by the recalculation.

Prior to the issuance of the certificate of correction, the USPTO will afford patentee an opportunity to be heard and request reconsideration. Accordingly, patentee has **one month or thirty (30) days**, whichever is longer, to file a request for reconsideration of this patent term adjustment calculation. See 35 U.S.C. 154(b)(3)(B)(ii) and 37 CFR 1.322(a)(4). No extensions of time will be granted under 37 CFR 1.136.

Patentee should use document code PET.OP if electronically filing a request for reconsideration of this patent term adjustment calculation. The patentee must also include the information required by 37 CFR 1.705(b)(2) and the fee required by 37 CFR 1.18(e). If patentee does not file a timely request for reconsideration of this patent term adjustment calculation including the information required by 37 CFR 1.705(b)(2) and the fee required by 37 CFR 1.18(e), the USPTO will issue a certificate of correction reflecting the PTA determination noted above.

Patentee should be aware that in order to preserve the right to review in the United States District Court for the District of Columbia of the USPTO patent term adjustment determination, patentee must ensure that he or she also take the steps required under 35 U.S.C. 154(b)(4)(A) in a timely manner. Nothing in the request for recalculation should be construed as providing an alternative time frame for commencing a civil action under 35 U.S.C. 154(b)(4)(A).

Any questions concerning this decision should be directed to the Office of Patent Legal Administration at 571-272-7702.

UNITED STATES PATENT AND TRADEMARK OFFICE

UNITED STATES DEPARTMENT OF COMMERCE
United States Patent and Trademark Office
Address: COMMISSIONER FOR PATENTS
P.O. Box 1450
Alexandria, Virginia 22313-1450
www.uspto.gov

James E. Lake
Wells St. John P.S.
Suite 1300
601 W First Avenue
Spokane, WA 99201-3828

Mail Date: 04/22/2010

Applicant	: Alex Paterson	: DECISION ON REQUEST FOR
Patent Number	: 7605034	: RECALCULATION of PATENT
Issue Date	: 10/20/2009	: TERM ADJUSTMENT IN VIEW
Appliction No	: 11/490,707	: OF WYETH AND NOTICE OF INTENT TO
Filed	: 07/21/2006	: ISSUE CERTIFICATE OF CORRECTION
		:

The Request for Recalculation is **GRANTED** to the extent indicated.

The patent term adjustment has been determined to be **59** days. The USPTO will *sua sponte* issue a certificate of correction reflecting the amount of PTA days determined by the recalculation.

Prior to the issuance of the certificate of correction, the USPTO will afford patentee an opportunity to be heard and request reconsideration. Accordingly, patentee has **one month or thirty (30) days**, whichever is longer, to file a request for reconsideration of this patent term adjustment calculation. See 35 U.S.C. 154(b)(3)(B)(ii) and 37 CFR 1.322(a)(4). No extensions of time will be granted under 37 CFR 1.136.

Patentee should use document code PET.OP if electronically filing a request for reconsideration of this patent term adjustment calculation. The patentee must also include the information required by 37 CFR 1.705(b)(2) and the fee required by 37 CFR 1.18(e). If patentee does not file a timely request for reconsideration of this patent term adjustment calculation including the information required by 37 CFR 1.705(b)(2) and the fee required by 37 CFR 1.18(e), the USPTO will issue a certificate of correction reflecting the PTA determination noted above.

Patentee should be aware that in order to preserve the right to review in the United States District Court for the District of Columbia of the USPTO patent term adjustment determination, patentee must ensure that he or she also take the steps required under 35 U.S.C. 154(b)(4)(A) in a timely manner. Nothing in the request for recalculation should be construed as providing an alternative time frame for commencing a civil action under 35 U.S.C. 154(b)(4)(A).

Any questions concerning this decision should be directed to the Office of Patent Legal Administration at 571-272-7702.

UNITED STATES PATENT AND TRADEMARK OFFICE

Commissioner for Patents
United States Patent and Trademark Office
P.O. Box 1450
Alexandria, VA 22313-1450
www.uspto.gov

HOWREY LLP
C/O IP DOCKETING DEPARTMENT
2941 FAIRVIEW PARK DRIVE SUITE 200
FALLS CHURCH VA 22042

MAILED

APR 20 2010

OFFICE OF PETITIONS

In re Application of :
ARNEVIK, Cindy L. et al. :
Application No. 11/490,708 : DECISION ON PETITION
Filed: July 21, 2006 : TO WITHDRAW
Attorney Docket No. **11899.0243.NPUS01** : FROM RECORD
:

This is a decision on the Request to Withdraw as attorney or agent of record under 37 C.F.R. § 1.36(b), filed February 26, 2010.

The request is **moot** because a revocation of power of attorney has been previously filed.

A review of the file record indicates that the power of attorney to HOWREY LLP has been revoked by the assignee of the patent application on March 18, 2010. Accordingly, the request to withdraw under 37 C.F.R. § 1.36(b) is moot.

All future communications from the Office will continue to be directed to the below-listed address until otherwise notified by applicant.

Telephone inquires concerning this decision should be directed to Tredelle Jackson at 571-272-2783.

/Tredelle D. Jackson/
Paralegal Specialist
Office of Petitions

cc: **SONNENSCHEIN NATH & ROSENTHAL LLP**
P.O. BOX 061080
SOUTH WACKER DRIVE STATION, WILLIS TOWER
CHICAGO, IL 60606

UNITED STATES PATENT AND TRADEMARK OFFICE

Commissioner for Patents
United States Patent and Trademark Office
P.O. Box 1450
Alexandria, VA 22313-1450
www.uspto.gov

CHOATE, HALL & STEWART LLP
TWO INTERNATIONAL PLACE
BOSTON, MA 02110

COPY MAILED

NOV 10 2008

In re Application of :
SCHABES, Yves et al. :
Application No. 11/490,719 : DECISION ON PETITION
Filed: July 21, 2006 : TO WITHDRAW
Attorney Docket No. **401122.0006** : FROM RECORD
:

This is a decision on the Request to Withdraw as attorney or agent of record under 37 C.F.R. § 1.36(b), filed October 29, 2008.

The request is **moot** because a revocation of power of attorney has been previously filed.

A review of the file record indicates that the power of attorney to CHOATE, HALL & STEWART LLP has been revoked by the assignee of the patent application on July 18, 2008. Accordingly, the request to withdraw under 37 C.F.R. § 1.36(b) is moot.

All future communications from the Office will continue to be directed to the below-listed address until otherwise notified by applicant.

Telephone inquires concerning this decision should be directed to Tredelle Jackson at 571-272-2783.

Tredelle D. Jackson
Paralegal Specialist
Office of Petitions

cc: **WILLIAMS MULLEN**
P.O. BOX 12109
RESEARCH TRIANGLE PARK NC 27709-2109

UNITED STATES PATENT AND TRADEMARK OFFICE

Commissioner for Patents
United States Patent and Trademark Office
P.O. Box 1450
Alexandria, VA 22313-1450
www.uspto.gov

MAILED

MAY 10 2010

OFFICE OF PETITIONS

FISH & RICHARDSON PC
P.O. BOX 1022
MINNEAPOLIS MN 55440-1022

In re Application of :
Arkady Pittel et al. :
Application No. 11/490,736 : DECISION ON PETITION
Filed: July 20, 2006 : TO WITHDRAW
Attorney Docket No. 19965-008001 : FROM RECORD
:

This is a decision on the Request to Withdraw as attorney or agent of record under 37 C.F.R. § 1.36(b), filed March 16, 2010.

The request is **APPROVED**.

A grantable request to withdraw as attorney/agent of record must be signed by every attorney/agent seeking to withdraw or contain a clear indication that one attorney is signing on behalf of another/others. A request to withdraw will not be approved unless at least 30 (thirty) days would remain between the date of approval and the later of the expiration date of a time to file a response or the expiration date of the maximum time period which can be extended under 37 C.F.R. § 1.136(a).

The request was signed by David L. Feigenbaum on behalf of all attorneys/agents of record. All attorneys/agents of record have been withdrawn.

Applicant is reminded that there is no attorney of record at this time.

The correspondence address has been changed and is copied below.

Telephone inquiries concerning this decision should be directed to Kimberly Inabinet at 571-272-4618.

/Kimberly Inabinet/

Kimberly Inabinet
Petitions Examiner
Office of Petitions

cc: Arkady Pittel
101 Winthrop Road, Suite 1
Brookline, MA 02445

UNITED STATES PATENT AND TRADEMARK OFFICE

UNITED STATES DEPARTMENT OF COMMERCE
United States Patent and Trademark Office
Address: COMMISSIONER FOR PATENTS
P.O. Box 1450
Alexandria, Virginia 22313-1450
www.uspto.gov

APPLICATION NUMBER	FILING OR 371(C) DATE	FIRST NAMED APPLICANT	ATTY. DOCKET NO./TITLE
11/490,736	07/20/2006	Arkady Pittel	19965-008001

CONFIRMATION NO. 2773

POWER OF ATTORNEY NOTICE

26161
FISH & RICHARDSON PC
P.O. BOX 1022
MINNEAPOLIS, MN 55440-1022

Date Mailed: 05/10/2010

NOTICE REGARDING CHANGE OF POWER OF ATTORNEY

This is in response to the Power of Attorney filed 03/16/2010.

- The withdrawal as attorney in this application has been accepted. Future correspondence will be mailed to the new address of record. 37 CFR 1.33.

/kainabinet/

Office of Data Management, Application Assistance Unit (571) 272-4000, or (571) 272-4200, or 1-888-786-0101

UNITED STATES PATENT AND TRADEMARK OFFICE

UNITED STATES DEPARTMENT OF COMMERCE
United States Patent and Trademark Office
Address: COMMISSIONER FOR PATENTS
P.O. Box 1450
Alexandria, Virginia 22313-1450
www.uspto.gov

JONES DAY
222 EAST 41ST ST
NEW YORK, NY 10017

Mail Date: 04/21/2010

Applicant	: Stanislas Gibet	: DECISION ON REQUEST FOR
Patent Number	: 7639091	: RECALCULATION of PATENT
Issue Date	: 12/29/2009	: TERM ADJUSTMENT IN VIEW
Appliction No	: 11/490,737	: OF WYETH AND NOTICE OF INTENT TO
Filed	: 07/20/2006	: ISSUE CERTIFICATE OF CORRECTION
		:

The Request for Recalculation is **GRANTED** to the extent indicated.

The patent term adjustment has been determined to be **223** days. The USPTO will *sua sponte* issue a certificate of correction reflecting the amount of PTA days determined by the recalculation.

Prior to the issuance of the certificate of correction, the USPTO will afford patentee an opportunity to be heard and request reconsideration. Accordingly, patentee has **one month or thirty (30) days**, whichever is longer, to file a request for reconsideration of this patent term adjustment calculation. See 35 U.S.C. 154(b)(3)(B)(ii) and 37 CFR 1.322(a)(4). No extensions of time will be granted under 37 CFR 1.136.

Patentee should use document code PET.OP if electronically filing a request for reconsideration of this patent term adjustment calculation. The patentee must also include the information required by 37 CFR 1.705(b)(2) and the fee required by 37 CFR 1.18(e). If patentee does not file a timely request for reconsideration of this patent term adjustment calculation including the information required by 37 CFR 1.705(b)(2) and the fee required by 37 CFR 1.18(e), the USPTO will issue a certificate of correction reflecting the PTA determination noted above.

Patentee should be aware that in order to preserve the right to review in the United States District Court for the District of Columbia of the USPTO patent term adjustment determination, patentee must ensure that he or she also take the steps required under 35 U.S.C. 154(b)(4)(A) in a timely manner. Nothing in the request for recalculation should be construed as providing an alternative time frame for commencing a civil action under 35 U.S.C. 154(b)(4)(A).

Any questions concerning this decision should be directed to the Office of Patent Legal Administration at 571-272-7702.

UNITED STATES PATENT AND TRADEMARK OFFICE

UNITED STATES DEPARTMENT OF COMMERCE
United States Patent and Trademark Office
Address: COMMISSIONER FOR PATENTS
P.O. Box 1450
Alexandria, Virginia 22313-1450
www.uspto.gov

JONES DAY
222 EAST 41ST ST
NEW YORK, NY 10017

Mail Date: 05/18/2010

Applicant : Stanislas Gibet
Patent Number : 7639091
Issue Date : 12/29/2009
Application No: 11/490,737
Filed : 07/20/2006

: NOTICE CONCERNING IMPROPER
: CALCULATION OF PATENT TERM
: ADJUSTMENT BASED UPON USPTO
: IMPROPERLY MEASURING REDUCTION
: PERIOD UNDER 37 CFR 1.704(c)(10).

The United States Patent and Trademark Office (USPTO) discovered that in processing the recent recalculation decisions mailed in response to patentee's filed Request for Recalculation of Patent Term Adjustment in view of Wyeth, the USPTO improperly measured the reduction period for reductions under 37 CFR 1.704(c)(10). Pursuant to 37 CFR 1.704(c)(10), patentee's reduction begins on the date of filing the amendment under 37 CFR 1.312 ("1.312 amendment") or other related paper and ends on the date that the Office mails a response to the filing of the 1.312 amendment or other paper. It has been discovered that during the recalculation, the calculation failed to the limit the reduction to the mail date of the response to the 1.312 amendment or other paper. Accordingly, patentee's reductions were greater than warranted.

This notice **VACATES** the previous GRANTED request for recalculation and provides patentee with a revised GRANTED recalculation.

The patent term adjustment has been determined to be **263** days. The USPTO will *sua sponte* issue a certificate of correction reflecting the amount of patent term adjustment (PTA) days determined by the recalculation.

Prior to the issuance of the certificate of correction, the USPTO will afford patentee an opportunity to be heard and request reconsideration. Accordingly, patentee has **one month or thirty (30) days** from the mail date of this notice, whichever is longer, to file a request for reconsideration of this PTA calculation. See 35 U.S.C. § 154(b)(3)(B)(ii) and 37 CFR 1.322(a)(4).

Patentee should use document code PET.OP if electronically filing a request for reconsideration of this PTA calculation. The patentee must also include the information required by 37 CFR 1.705(b)(2), and the fee required by 37 CFR 1.18(e). If patentee does not file a timely request for reconsideration of this PTA calculation, including the information required by 37 CFR 1.705(b)(2) and the fee required by 37 CFR 1.18(e), the USPTO will issue a certificate of correction reflecting the PTA determination noted above.

Patentee should be aware that in order to preserve the right of review of the USPTO's PTA determination in the United States District Court for the District of Columbia, patentee must ensure that the steps required under 35 U.S.C. § 154 (b)(4) are taken in a timely manner. Nothing in the request for recalculation should be construed as providing an alternative time frame for commencing a civil action under 35 U.S.C. § 154(b)(4).

UNITED STATES PATENT AND TRADEMARK OFFICE

Commissioner for Patents
United States Patent and Trademark Office
P.O. Box 1450
Alexandria, VA 22313-1450
www.uspto.gov

MICHAEL B. MARTIN
PATENT AND LICENSING DEPARTMENT
MALCO COMPANY
1601 WEST DIEHL ROAD
NAPERVILLE, IL 60563-1198

COPY MAILED

OCT 0 1 2007

OFFICE OF PETITIONS

In re Application of :
Duggirala et al. :
Application No. 11/490,738 : DECISION GRANTING PETITION
Filed: July 21, 2006 : UNDER 37 CFR 1.137(b)
Attorney Docket No. 7979 :

This is a decision on the petition, filed September 21, 2007, which is being treated as a petition under 37 CFR 1.137(b) to revive the instant non-provisional application for failure to timely notify the U.S. Patent and Trademark (USPTO) of the filing of an application in a foreign country, or under a multinational treaty that requires publication of applications eighteen months after filing. *See* 37 CFR 1.137(f).

The petition is **GRANTED**.

Petitioner states that the instant nonprovisional application is the subject of an application filed in an eighteen-month publication country on February 17, 2007. However, the USPTO was unintentionally not notified of this filing within 45 days subsequent to the filing of the subject application in an eighteen-month publication country.

In view of the above, this application became abandoned pursuant to 35 U.S.C. § 122(b)(2)(B)(iii) and 37 CFR 1.213(c) for failure to timely notify the Office of the filing of an application in a foreign country or under a multilateral international agreement that requires publication of applications 18 months after filing.

A petition to revive an application abandoned pursuant to 35 U.S.C. 122(b)(2)(B)(iii) for failure to notify the USPTO of a foreign filing must be accompanied by:

(1) the required reply which is met by the notification of such filing in a foreign country or under a multinational treaty;
(2) the petition fee as set forth in 37 CFR 1.17(m); and
(3) a statement that the entire delay in filing the required reply from the due date of the reply until the filing of a grantable petition was unintentional.

The instant petition has been found to be in compliance with 37 CFR 1.137(b). Accordingly, the failure to timely notify the USPTO of a foreign or international filing within 45 days after the date of filing of such foreign or international application as provided by 35 U.S.C. § 122(b)(2)(B)(iii) and 37 CFR 1.213(c) is accepted as having been unintentionally delayed.

The previous Request and Certification under 35 U.S.C. § 122(b)(2)(B)(i) has been rescinded. A Notice Regarding Rescission of Nonpublication Request which sets forth the projected publication date of January 24, 2008 was previously mailed on July 18, 2007.

This application is being forwarded to Technology Center Art Unit 1731 for examination in due course.

Telephone inquiries concerning this decision should be directed to the undersigned at (571) 272-3206.

Liana Walsh
Petitions Examiner
Office of Petitions

UNITED STATES PATENT AND TRADEMARK OFFICE

UNITED STATES DEPARTMENT OF COMMERCE
United States Patent and Trademark Office
Address: COMMISSIONER FOR PATENTS
P.O. Box 1450
Alexandria, Virginia 22313-1450
www.uspto.gov

STMicroelectronics Inc.
c/o WOLF, GREENFIELD & SACKS, P.C.
600 Atlantic Avenue
BOSTON, MA 02210-2206

Mail Date: 04/20/2010

Applicant	: Patrick Poveda	: DECISION ON REQUEST FOR
Patent Number	: 7589602	: RECALCULATION of PATENT
Issue Date	: 09/15/2009	: TERM ADJUSTMENT IN VIEW
Appliction No	: 11/490,740	: OF WYETH AND NOTICE OF INTENT TO
Filed	: 07/21/2006	: ISSUE CERTIFICATE OF CORRECTION
		:

The Request for Recalculation is **GRANTED** to the extent indicated.

The patent term adjustment has been determined to be **220** days. The USPTO will *sua sponte* issue a certificate of correction reflecting the amount of PTA days determined by the recalculation.

Prior to the issuance of the certificate of correction, the USPTO will afford patentee an opportunity to be heard and request reconsideration. Accordingly, patentee has **one month or thirty (30) days**, whichever is longer, to file a request for reconsideration of this patent term adjustment calculation. See 35 U.S.C. 154(b)(3)(B)(ii) and 37 CFR 1.322(a)(4). No extensions of time will be granted under 37 CFR 1.136.

Patentee should use document code PET.OP if electronically filing a request for reconsideration of this patent term adjustment calculation. The patentee must also include the information required by 37 CFR 1.705(b)(2) and the fee required by 37 CFR 1.18(e). If patentee does not file a timely request for reconsideration of this patent term adjustment calculation including the information required by 37 CFR 1.705(b)(2) and the fee required by 37 CFR 1.18(e), the USPTO will issue a certificate of correction reflecting the PTA determination noted above.

Patentee should be aware that in order to preserve the right to review in the United States District Court for the District of Columbia of the USPTO patent term adjustment determination, patentee must ensure that he or she also take the steps required under 35 U.S.C. 154(b)(4)(A) in a timely manner. Nothing in the request for recalculation should be construed as providing an alternative time frame for commencing a civil action under 35 U.S.C. 154(b)(4)(A).

Any questions concerning this decision should be directed to the Office of Patent Legal Administration at 571-272-7702.

UNITED STATES PATENT AND TRADEMARK OFFICE

Commissioner for Patents
United States Patent and Trademark Office
P.O. Box 1450
Alexandria, VA 22313-1450
www.uspto.gov

WILMERHALE/BOSTON
60 STATE STREET
BOSTON MA 02109

MAILED

JAN 27 2010

OFFICE OF PETITIONS

In re Application of :
MALOZEMOFF et al. :
Application No. 11/490,779 : ON APPLICATION FOR
Filed: 07/21/2006 : PATENT TERM ADJUSTMENT
Docket No. 0002802.00188US1 :

This is in response to the APPLICATION FOR PATENT TERM ADJUSTMENT AND REQUEST FOR RECONSIDERATION OF THE PATENT TERM ADJUSTMENT UNDER 37 C.F.R. §§ 1.702-1.705 filed December 2, 2009. Applicants submit that the correct patent term adjustment to be indicated on the patent is seven hundred forty-nine (749) days, not five hundred sixty-three (563) days as calculated by the Office as of the mailing of the initial determination of patent term adjustment. Applicants seek this correction solely on the basis that the Office will take in excess of three years to issue this patent.

As the instant application for patent term adjustment requests reconsideration of the patent term adjustment as it relates to the Office's failure to issue the patent within three years of the filing date, the application for patent term adjustment under 37 CFR 1.705(b) is **DISMISSED as PREMATURE**.

Knowledge of the actual date the patent issues is required to calculate the amount, if any, of additional patent term patentees are entitled to for Office failure to issue the patent within three years. See 37 CFR 1.702(b). (This is true even where a request for continued examination (RCE) was filed). The computer will not undertake the § 1.702(b) calculation until the actual date of issuance of the patent has been determined.

Likewise, the computer will not calculate any further Office delay under 37 CFR 1.702(a)(4) or applicant delay under 37 CFR 1.704(c)(10) until the actual date of issuance of the patent has been determined. As such, the Office cannot make a determination on the correctness of the patent term adjustment until the patent has issued.

Requesting reconsideration of the patent term adjustment to be indicated on the patent under 37 CFR 1.705(b) based on the initial determination of patent term adjustment and a projected issuance date of the patent (or even the filing date of the request for continued examination) is premature. Accordingly, it is appropriate to dismiss such a request as premature.

Rather than file an application for patent term adjustment under 37 CFR 1.705(b) contesting the 37 CFR 1.702(b) calculation at the time of the mailing of the notice of allowance, applicants are advised that they may wait until the time of the issuance of the patent and file a request for reconsideration of the patent term adjustment pursuant to 37 CFR 1.705(d). As the USPTO does not calculate the amount of time earned pursuant to 37 CFR 1.702(b) until the time of the issuance of the patent, the Office will consider any request for reconsideration of the patent term adjustment due to an error in the calculation of 37 CFR 1.702(b) to be timely if the request for reconsideration is filed within two months of the issuance of the patent. However, as to all other bases for contesting the initial determination of patent term adjustment received with the notice of allowance, applicants must timely file an application for patent term adjustment prior to the payment of the issue fee.[1]

---

[1] For example, if applicants dispute both the calculation of patent term adjustment under 37 CFR 1.702(a)(1) for Office failure to mail a first Office action or notice of allowance not later than fourteen months after the date on which the application was filed, and under 37 CFR 1.702(b) for Office failure to issue a patent within three years of the actual filing date of the application, then applicants must still timely file an application for patent term adjustment prior to the payment of the issue fee to contest the calculation of Office delay in issuing a first Office action or notice of allowance. See 37 CFR 1.705(b) and 35 U.S.C. 154(b)(3)(B). A dispute as to the calculation of the § 1.702(a)(1) period raised on request for reconsideration of patent term adjustment under 37 CFR 1.705(d) will be dismissed as untimely filed.

The Office acknowledges submission of the $200.00 fee set forth in 37 CFR 1.18(e) for consideration of the application for patent term adjustment under 37 CFR 1.705(b).

Any request for reconsideration of the patent term adjustment indicated on the patent must be timely filed within two months after issuance pursuant to 37 CFR 1.705(d) and must include payment of the required fee under 37 CFR 1.18(e).

The Office of Data Management has been advised of this decision. This application is being referred to the Office of Data Management for issuance of the patent.

Telephone inquiries specific to this decision should be directed to the undersigned at (571) 272-3211.

Christina Tartera Donnell

Christina Tartera Donnell
Senior Petitions Attorney
Office of Petitions

UNITED STATES PATENT AND TRADEMARK OFFICE

Commissioner for Patents
United States Patent and Trademark Office
P.O. Box 1450
Alexandria, VA 22313-1450
www.uspto.gov

MITSUBISHI ELECTRIC RESEARCH LABORATORIES, INC.
201 BROADWAY
8TH FLOOR
CAMBRIDGE MA 02139

COPY MAILED
JAN 25 2010

In re Application of	:	
Avidan et al..	:	
Application No.: 11/490782	:	ON PETITION
Filing or 371(c) Date: 07/21/2006	:	
Attorney Docket Number: MERL-1811	:	

This is a decision on the petition under the unintentional provisions of 37 CFR 1.137(b), filed September 17, 2009, to revive the above-identified application.

The petition is **GRANTED**.

This application became abandoned for failure to timely pay the issue and publication fees on or before July 16, 2009, as required by the Notice of Allowance and Fee(s) Due, mailed April 16, 2009. Accordingly, the date of abandonment of this application is July 17, 2009.

The petition satisfies the requirements of 37 CFR 1.137(b) in that petitioner has supplied (1) the reply in the form of payment of the issue fee and the publication fee; (2) the petition fee; and (3) a proper statement of unintentional delay.

Telephone inquiries concerning this matter should be directed to the undersigned at (571) 272-3232.

This application is being referred to the Office of Data Management for processing into a patent.

/Derek L. Woods/
Derek L. Woods
Attorney
Office of Petitions

UNITED STATES PATENT AND TRADEMARK OFFICE

Commissioner for Patents
United States Patent and Trademark Office
P.O. Box 1450
Alexandria, VA 22313-1450
www.uspto.gov

COLIN P. ABRAHAMS
5850 CANOGO AVENUE, SUITE 400
WOODLAND HILLS, CA 91367

COPY MAILED

JUL 0 5 2007

OFFICE OF PETITIONS

In re Application of :
PHELAN, James V. :
Application No. 11/490,794 : DECISION ON PETITION
Filed: July 21, 2006 : TO MAKE SPECIAL UNDER
Attorney Docket No. **1342-101.US** : 37 CFR 1.102(c)(1)
:

This is a decision on the petition under 37 CFR 1.102(c)(1), filed June 22, 2007, to make the above-identified application special based on applicant's age as set forth in M.P.E.P. § 708.02, Section IV.

The petition is **GRANTED**.

A grantable petition to make an application special under 37 CFR 1.102(c)(1) and MPEP § 708.02, Section IV: Applicant's Age must be accompanied by evidence showing that at least one of the applicants is 65 years of age, or more, such as a birth certificate or a statement by applicant. No fee is required

The instant petition includes a copy of the driver's license of inventor James V. Phelan, attesting to his age. Accordingly, the above-identified application has been accorded "special" status.

Telephone inquiries concerning this decision should be directed to the undersigned at 571-272-7253.

All other inquiries concerning either the examination or status of the application should be directed to the Technology Center.

The application is being forwarded to the Technology Center Art Unit 3611 for action on the merits commensurate with this decision.

Monica A. Graves
Petitions Examiner
Office of Petitions

UNITED STATES PATENT AND TRADEMARK OFFICE

Commissioner for Patents
United States Patent and Trademark Office
P.O. Box 1450
Alexandria, VA 22313-1450
www.uspto.gov

COPY MAILED

NOV 07 2006

OFFICE OF PETITIONS

W. PETE REID
ATTORNEY AT LAW, LLC
PO BOX 13555
CHARLESTON SC 29422-3555

In re Application of
Loren M. Collins
Application No. 11/490,800
Filed: July 20, 2006
Attorney Docket No. 5420-002-M

: DECISION GRANTING
: PETITION

This is a decision on the filing date petition filed October 10, 2006, under 37 CFR 1.57.

The application was filed on July 20, 2006. However, on August 9, 2006 the Office of Initial Patent Examination mailed a Notice of Incomplete Application stating that the application had not been filed with drawings and thus, the application could not be accorded a filing date.

In response, the present petition was filed. Petitioner acknowledges that the drawings were inadvertently omitted but argues that the instant application, upon filing, properly claimed priority to a prior filed non-provisional application 10/871,490 filed June 18, 2004. With the petition was filed a specification, claims, drawings and abstract.

On September 21, 2004, § 1.57 was added to read, in pertinent part that:

> (a) Subject to the conditions and requirements of this paragraph, if all or a portion of the specification or drawing(s) is inadvertently omitted from an application, but the application contains ... a claim under 1.78 for the benefit of a prior-filed provisional, nonprovisional or international application, that was present on the filing date of the application, and the inadvertently omitted portion of the specification or drawing(s) is completely contained in the prior-filed application, the claim under ... § 1.78 shall also be considered an incorporation by reference of the prior-filed application as to the inadvertently omitted portion of the specification or drawing(s).
>
> (1) The application must be amended to include the inadvertently omitted portion of the specification or drawing(s) within any time period set by the Office, but in no case later than the close of prosecution as defined by § 1.114(b), or abandonment of the application, whichever occurs earlier;
>
> (3) If an application is not otherwise entitled to a filing date under § 1.53(b), the amendment must be by way of a petition pursuant to this paragraph

accompanied by the fee set forth in § 1.17(f).

A review of the file reveals that the specification provided on application included a priority claim to prior filed non-provisional application no. 10/871,490 filed June 18, 2004.

In view of 37 CFR 1.57 which provides that a proper priority claim under 37 CFR 1.55 or 37 CFR 1.78 can also be considered an incorporation by reference of the prior filed application as to the inadvertently omitted drawings, the argument is persuasive and the petition therefore is **GRANTED** .

Since the petition was required to accord the requested filing date and since the error occurred through no wrongdoing on the part of the USPTO, the petition fee in the amount of $400.00 has been charged to petitioner's deposit account and cannot be refunded.

The application is being forwarded to the Office of Initial Patent Examination for correction of the filing date to July 20, 2006, using the application papers filed July 20, 2006 and those submitted October 10, 2006 as a part of the original disclosure.

Telephone inquiries concerning this matter should be directed to Senior Petitions Attorney Patricia Faison-Ball at (571) 272-3212.

Charles Pearson
Director
Office of Petitions

UNITED STATES PATENT AND TRADEMARK OFFICE

Commissioner for Patents
United States Patent and Trademark Office
P.O. Box 1450
Alexandria, VA 22313-1450
www.uspto.gov

TOWNSEND AND TOWNSEND AND CREW, LLP
TWO EMBARCADERO CENTER
EIGHTH FLOOR
SAN FRANCISCO CA 94111-3834

COPY MAILED

JUL 3 1 2007

OFFICE OF PETITIONS

In re Application of
Li and Xu
Application No. 11/490,839
Filed: 07/21/2006
Attorney Docket No. 021653-014000US
Title: POWER SAVING SYSTEM AND METHOD FOR DEVICES BASED ON UNIVERSAL SERIAL BUS

ON PETITION

This is in response to the petition under 37 CFR 1.47(a), filed February 14, 2007 (certificate of mailing dated February 12, 2007). Petitioner obtained an extension of time for response within the fourth month. Accordingly, the petition is filed timely.

The petition is **GRANTED.**

Petitioner has shown that the non-signing inventor has refused to join in the filing of the above-identified application.

The application and papers have been reviewed and found in compliance with 37 CFR 1.47(a). This application is hereby accorded Rule 1.47(a) status. As provided in 37 CFR 1.47(c), this Office will forward notice of this application's filing to the non-signing inventor at the address given in the petition. Notice of the filing of this application will also be published in the Official Gazette.

This matter is being referred to Technology Center AU 2115 for examination in due course.

Telephone inquiries regarding this decision should be directed to the undersigned at (571) 272-3211.

Christina Tartera Donnell

Christina Tartera Donnell
Senior Petitions Attorney
Office of Petitions

UNITED STATES PATENT AND TRADEMARK OFFICE

Commissioner for Patents
United States Patent and Trademark Office
P.O. Box 1450
Alexandria, VA 22313-1450
www.uspto.gov

Daniel Xu
18, Qing Tong Road, #51-1201
Shanghai, 201203
People's Republic of China.

COPY MAILED

JUL 31 2007

OFFICE OF PETITIONS

In re Application of :
Li and Xu :
Application No. 11/490,839 : ON PETITION
Filed: 07/21/2006 :
Attorney Docket No. 021653-014000US :
Title: POWER SAVING SYSTEM AND :
METHOD FOR DEVICES BASED ON :
UNIVERSAL SERIAL BUS :

Dear Mr. Xu:

You are named as a joint inventor in the above-identified United States patent application, filed under the provisions of 35 U.S.C. 116 (United States Code), and 37 CFR 1.47(a), Rules of Practice in Patent Cases. Should a patent be granted on the application you will be designated therein as a joint inventor.

As a named inventor you are entitled to inspect any paper in the file wrapper of the application, order copies of all or any part thereof (at a prepaid cost per 37 CFR 1.19) or make your position of record in the application. Alternatively, you may arrange to do any of the preceding through a registered patent attorney or agent presenting written authorization from you. If you care to join the application, counsel of record (see below) would presumably assist you. Joining the application would entail the filing of an appropriate oath or declaration by you pursuant to 37 CFR 1.63.

Requests for information regarding your application should be directed to the File Information Unit at (703) 308-2733. Information regarding how to pay for and order a copy of the application, or a specific paper in the application, should be directed to the Certification Division at (571) 272-3150 or (800) 972-6382 (outside the Washington, DC area).

Christina Tartera Donnell

Christina Tartera Donnell
Senior Petitions Attorney
Office of Petitions

Cc: TOWNSEND AND TOWNSEND AND CREW, LLP
TWO EMBARCADERO CENTER
EIGHTH FLOOR
SAN FRANCISCO CA 94111-3834

UNITED STATES PATENT AND TRADEMARK OFFICE

Commissioner for Patents
United States Patent and Trademark Office
P.O. Box 1450
Alexandria, VA 22313-1450
www.uspto.gov

Daniel Xu
18, Qing Tong Road, #51-1201
Shanghai, 201203
People's Republic of China.

COPY MAILED

JUL 3 1 2007

OFFICE OF PETITIONS

In re Application of	:	
Li and Xu	:	
Application No. 11/490,839	:	ON PETITION
Filed: 07/21/2006	:	
Attorney Docket No. 021653-014000US	:	
Title: POWER SAVING SYSTEM AND METHOD FOR DEVICES BASED ON UNIVERSAL SERIAL BUS	:	

Dear Mr. Xu:

You are named as a joint inventor in the above-identified United States patent application, filed under the provisions of 35 U.S.C. 116 (United States Code), and 37 CFR 1.47(a), Rules of Practice in Patent Cases. Should a patent be granted on the application you will be designated therein as a joint inventor.

As a named inventor you are entitled to inspect any paper in the file wrapper of the application, order copies of all or any part thereof (at a prepaid cost per 37 CFR 1.19) or make your position of record in the application. Alternatively, you may arrange to do any of the preceding through a registered patent attorney or agent presenting written authorization from you. If you care to join the application, counsel of record (see below) would presumably assist you. Joining the application would entail the filing of an appropriate oath or declaration by you pursuant to 37 CFR 1.63.

Requests for information regarding your application should be directed to the File Information Unit at (703) 308-2733. Information regarding how to pay for and order a copy of the application, or a specific paper in the application, should be directed to the Certification Division at (571) 272-3150 or (800) 972-6382 (outside the Washington, DC area).

/s/

Christina Tartera Donnell
Senior Petitions Attorney
Office of Petitions

Cc: TOWNSEND AND TOWNSEND AND CREW, LLP
TWO EMBARCADERO CENTER
EIGHTH FLOOR
SAN FRANCISCO CA 94111-3834

UNITED STATES PATENT AND TRADEMARK OFFICE

Commissioner for Patents
United States Patent and Trademark Office
P.O. Box 1450
Alexandria, VA 22313-1450
www.uspto.gov

Weide & Miller, Ltd.
7251 W. Lake Mead Boulevard
Suite 530
Las Vegas, NV 89128

COPY MAILED

NOV 26 2008

OFFICE OF PETITIONS

In re Application of

Marc Roth
Application No. 11/490,863
Filed: July 20, 2006
Attorney Docket No. MCROTH.0002P

DECISION ON PETITION
TO WITHDRAW
FROM RECORD

This is a decision on the Request to Withdraw as attorney or agent under 37 C.F.R. § 1.36(b) or 37 C.F.R. § 10.40 filed October 27, 2008.

The request is **APPROVED**.

A grantable request to withdraw as attorney/agent of record must be signed by every attorney/agent seeking to withdraw or contain a clear indication that one attorney is signing on behalf of another/others. The Office requires the practitioner(s) requesting withdrawal to certify that he, she, or they have: (1) given reasonable notice to the client, prior to the expiration of the response period, that the practitioner(s) intends to withdraw from employment; (2) delivered to the client or a duly authorized representative of the client all papers and property (including funds) to which the client is entitled; and (3) notified the client of any responses that may be due and the time frame within which the client must respond, pursuant 37 CFR 10.40(c).

The request was signed by R. Scott Weide on behalf of all attorneys/agents associated with customer number 32856. All attorneys/agents associated with customer number 32856 have been withdrawn.

Applicant is reminded that there is no attorney of record at this time.

The correspondence address has been changed and is copied below.

Telephone inquiries concerning this decision should be directed to Kimberly Inabinet at 571-272-4618.

Kimberly Inabinet
Petitions Examiner
Office of Petitions

cc: Marc Roth
2753 South Highland Drive, Ste. 1022
Las Vegas, NV 89109

UNITED STATES PATENT AND TRADEMARK OFFICE

UNITED STATES DEPARTMENT OF COMMERCE
United States Patent and Trademark Office
Address: COMMISSIONER FOR PATENTS
P.O. Box 1450
Alexandria, Virginia 22313-1450
www.uspto.gov

APPLICATION NUMBER	FILING OR 371(C) DATE	FIRST NAMED APPLICANT	ATTY. DOCKET NO./TITLE
11/490,863	07/20/2006	Marc Roth	MCROTH.0002P

CONFIRMATION NO. 2850

POWER OF ATTORNEY NOTICE

32856
WEIDE & MILLER, LTD.
7251 W. LAKE MEAD BLVD.
SUITE 530
LAS VEGAS, NV 89128

Date Mailed: 11/25/2008

NOTICE REGARDING CHANGE OF POWER OF ATTORNEY

This is in response to the Power of Attorney filed 10/27/2008.

- The withdrawal as attorney in this application has been accepted. Future correspondence will be mailed to the new address of record. 37 CFR 1.33.

/kainabinet/

Office of Data Management, Application Assistance Unit (571) 272-4000, or (571) 272-4200, or 1-888-786-0101

UNITED STATES PATENT AND TRADEMARK OFFICE

Commissioner for Patents
United States Patent and Trademark Office
P.O. Box 1450
Alexandria, VA 22313-1450
www.uspto.gov

APPLICATION NUMBER	FILING/RECEIPT DATE	FIRST NAMED APPLICANT	ATTORNEY DOCKET NUMBER
11/490,872	07/31/2006	Trung Tri Doan	M122-3256

WELLS ST. JOHN P.S.
601 W. FIRST AVENUE, SUITE 1300
SPOKANE WA 99201

DATE MAILED: August 16, 2007

DECISION GRANTING PETITION UNDER 37 CFR 1.138(d)
The declaration of express abandonment is recognized

This is in response to the petition under 37 CFR 1.138(d) filed August 10, 2007, requesting for a refund of any previously paid search fee and excess claims fee in the above-identified application.

The petition is granted.

The express abandonment is recognized. Any previously paid search fee and excess claims fee are hereby refunded.

Any inquiries concerning this decision should be directed to the Pre-Grant Publication Division at (703) 605-4283.

Barbara J. Debram
Pre-Grant Publication Division

UNITED STATES PATENT AND TRADEMARK OFFICE

UNITED STATES DEPARTMENT OF COMMERCE
United States Patent and Trademark Office
Address: COMMISSIONER FOR PATENTS
P.O. Box 1450
Alexandria, Virginia 22313-1450
www.uspto.gov

APPLICATION NO.	FILING DATE	FIRST NAMED INVENTOR	ATTORNEY DOCKET NO.	CONFIRMATION NO.
11/490,886	07/21/2006	Johannes Walter Reuter	06-ERC-025	3857

7590 07/30/2008

PAUL V. KELLER, LLC
4585 LIBERTY RD.
SOUTH EUCLID, OH 44121

EXAMINER	
MATTHIAS, JONATHAN R	

ART UNIT	PAPER NUMBER
4166	

MAIL DATE	DELIVERY MODE
07/30/2008	PAPER

DECISION GRANTING PETITION UNDER 37 CFR 1.138(d)

The declaration of express abandonment is recognized

This is in response to the petition under 37 CFR 1.138(d), requesting for a refund of any previously paid search fee and excess claims fee in the above-identified application.

The petition is granted.

The express abandonment is recognized. Any previously paid search fee and excess claims fee are hereby refunded.

Telephone inquiries should be directed to the Office of Data Management at (571) 272-4200.

Betty Powell

Patent Publication Branch
Office of Data Management

Adjustment date: 07/31/2008 BPOWELL
07725/2006 HDEMESS1 00000055 11490886
03 FC:1111 -500.00 OP

Adjustment date: 07/31/2008 BPOWELL
07725/2006 HDEMESS1 00000055 11490886
03 FC:1111 -500.00 OP

UNITED STATES PATENT AND TRADEMARK OFFICE

Commissioner for Patents
United States Patent and Trademark Office
P.O. Box 1450
Alexandria, VA 22313-1450
www.uspto.gov

HOWARD EISENBERG, ESQ.
1220 LIMBERLOST LANE
GLADWYNE, PA 19035

COPY MAILED

AUG 13 2007

OFFICE OF PETITIONS

In re Application of :
CHANG, Yunik et al. :
Application No. 11/490,896 : DECISION ON PETITION
Filed: July 21, 2006 : TO MAKE SPECIAL UNDER
Attorney Docket No. **767.0044** : 37 CFR 1.102(c)(1)
:

This is a decision on the petition under 37 CFR 1.102(c)(1), filed July 11, 2007, to make the above-identified application special based on applicant's age as set forth in M.P.E.P. § 708.02, Section IV.

The petition is **GRANTED**.

A grantable petition to make an application special under 37 CFR 1.102(c)(1) and MPEP § 708.02, Section IV: Applicant's Age must be accompanied by evidence showing that at least one of the applicants is 65 years of age, or more, such as a birth certificate or a statement by applicant. No fee is required.

The instant petition includes a statement by Yunik Chang attesting that he is over 65 years of age. Accordingly, the above-identified application has been accorded "special" status.

Telephone inquiries concerning this decision should be directed to Michelle R. Eason at 571-272-4231.

All other inquiries concerning either the examination or status of the application should be directed to the Technology Center.

The application is being forwarded to the Technology Center Art Unit 1617 for action on the merits commensurate with this decision.

T. Williams

Terri Williams
Petitions Examiner
Office of Petitions

UNITED STATES PATENT AND TRADEMARK OFFICE

UNITED STATES DEPARTMENT OF COMMERCE
United States Patent and Trademark Office.
Address: COMMISSIONER FOR PATENTS
P.O. Box 1450
Alexandria, Virginia 22313-1450
www.uspto.gov

APPLICATION NO.	FILING DATE	FIRST NAMED INVENTOR	ATTORNEY DOCKET NO.	CONFIRMATION NO.
11/490,897	07/21/2006	Michel Andre Crepeau	132516	3893

7590. 02/19/2009

OLIFF & BERRIDGE, PLC
P.O. BOX 320850
ALEXANDRIA, VA 22320-4850

EXAMINER	
HARTLEY, MICHAEL G	

ART UNIT	PAPER NUMBER
1618	

MAIL DATE	DELIVERY MODE
02/19/2009	PAPER

DECISION GRANTING PETITION UNDER 37 CFR 1.138(d)

The declaration of express abandonment is recognized

This is in response to the petition under 37 CFR 1.138(d), requesting for a refund of any previously paid search fee and excess claims fee in the above-identified application.

The petition is granted.

The express abandonment is recognized. Any previously paid search fee and excess claims fee are hereby refunded.

Telephone inquiries should be directed to the Office of Data Management at (571) 272-4200.

Patent Publication Branch
Office of Data Management

Adjustment date: 02/19/2009 BPOWELL
07/25/2006 HDEMESS1 00000073 032775 11490897
02 FC:1111 500.00 CR

Refund Ref:
02/19/2009 0030066822

Credit Card Refund Total: $500.00

Am Exp..: XXXXXXXXXXX1000

UNITED STATES PATENT AND TRADEMARK OFFICE

UNITED STATES DEPARTMENT OF COMMERCE
United States Patent and Trademark Office
Address: COMMISSIONER FOR PATENTS
P.O. Box 1450
Alexandria, Virginia 22313-1450
www.uspto.gov

CALFEE HALTER & GRISWOLD, LLP
800 SUPERIOR AVENUE
SUITE 1400
CLEVELAND, OH 44114

Mail Date: 04/20/2010

Applicant	: Gerold Goertzen	: DECISION ON REQUEST FOR
Patent Number	: 7597163	: RECALCULATION of PATENT
Issue Date	: 10/06/2009	: TERM ADJUSTMENT IN VIEW
Appliction No	: 11/490,899	: OF WYETH AND NOTICE OF INTENT TO
Filed	: 07/21/2006	: ISSUE CERTIFICATE OF CORRECTION
		:

The Request for Recalculation is **GRANTED** to the extent indicated.

The patent term adjustment has been determined to be **432** days. The USPTO will *sua sponte* issue a certificate of correction reflecting the amount of PTA days determined by the recalculation.

Prior to the issuance of the certificate of correction, the USPTO will afford patentee an opportunity to be heard and request reconsideration. Accordingly, patentee has **one month or thirty (30) days**, whichever is longer, to file a request for reconsideration of this patent term adjustment calculation. See 35 U.S.C. 154(b)(3)(B)(ii) and 37 CFR 1.322(a)(4). No extensions of time will be granted under 37 CFR 1.136.

Patentee should use document code PET.OP if electronically filing a request for reconsideration of this patent term adjustment calculation. The patentee must also include the information required by 37 CFR 1.705(b)(2) and the fee required by 37 CFR 1.18(e). If patentee does not file a timely request for reconsideration of this patent term adjustment calculation including the information required by 37 CFR 1.705(b)(2) and the fee required by 37 CFR 1.18(e), the USPTO will issue a certificate of correction reflecting the PTA determination noted above.

Patentee should be aware that in order to preserve the right to review in the United States District Court for the District of Columbia of the USPTO patent term adjustment determination, patentee must ensure that he or she also take the steps required under 35 U.S.C. 154(b)(4)(A) in a timely manner. Nothing in the request for recalculation should be construed as providing an alternative time frame for commencing a civil action under 35 U.S.C. 154(b)(4)(A).

Any questions concerning this decision should be directed to the Office of Patent Legal Administration at 571-272-7702.

UNITED STATES PATENT AND TRADEMARK OFFICE

Commissioner for Patents
United States Patent and Trademark Office
P.O. Box 1450
Alexandria, VA 22313-1450
www.uspto.gov

PAUL V. KELLER, LLC
4585 LIBERTY RD.
SOUTH EUCLID OH 44121

COPY MAILED
DEC 12 2006
OFFICE OF PETITIONS

In re Application of :
McCarthy et al. :
Application No. 11/490, 910 : DECISION ON PETITION
Filed: July 21, 2006 : TO MAKE SPECIAL UNDER
Attorney Docket No. 06-ERC-173 : 37 CFR 1.102(c)(2)
:

This is a decision on the petition under 37 CFR 1.102(c)(2)(i), filed July 21, 2006, to make the above-identified application special based on the invention materially enhancing the quality of the environment as set forth in M.P.E.P. § 708.02, Section V.

The petition is **DISMISSED**.

A grantable petition to make an application special under 37 CFR 1.102(c)(2)(i) and MPEP § 708.02, Section V: Environmental Quality, must state that special status is sought because the invention materially enhances the quality of the environment by contributing to the restoration or maintenance of basic life-sustaining natural elements. If the disclosure is not clear on its face that the claimed invention materially enhances the quality of the environment by contributing to the restoration or maintenance of one of the basic life-sustaining natural elements, the petition must be accompanied by a statement by the applicant, assignee, or an attorney/agent registered to practice before the Office explaining how the materiality standard is met. No fee is required.

Petitioner's submission fails to meet the criteria set out with respect to materially enhancing the quality of the environment by contributing to the restoration or maintenance of basic life-sustaining natural elements, as set forth in M.P.E.P. § 708.02, Section V. The specification and claims as originally filed indicate the invention is directed to a pollution control device for diesel engines. However, the instant petition fails to meet the materiality standard of 37 CFR 1.102(c)(2). Although the instant invention may be directed to reduction of diesel emissions, the materiality standard of the rule has not been met, i.e. the petitioner has failed to explain how the claimed invention contributes in a significant, substantial, or noticeable manner to the maintenance of the basic life-sustaining natural elements. That the invention may reduce diesel emissions to a satisfactory extent in the sense of meeting EPA regulations effective in 2010, as stated, does not in itself meet the materiality standard. As a result, no contribution to the restoration or maintenance of basic life-sustaining natural elements has been persuasively shown.

Further correspondence with respect to this matter should be addressed as follows:

By Mail: Mail Stop PETITION
Commissioner for Patents

P. O. Box 1450
Alexandria, VA 22313-1450

By hand: U. S. Patent and Trademark Office
Customer Service Window, Mail Stop Petitions
Randolph Building
401 Dulany Street
Alexandria, VA 22314

By FAX: (571) 273-8300

Telephone inquiries concerning this decision should be directed to Ramesh Krishnamurthy at 571-272-4914, or to the undersigned at 571-272-7099.

All other inquiries concerning either the examination or status of the application should be directed to the Technology Center.

The application is being forwarded to the Technology Center Art Unit 3748 for action in its regular turn.

David Bucel
Petitions Examiner
Office of Petitions

UNITED STATES PATENT AND TRADEMARK OFFICE

UNITED STATES DEPARTMENT OF COMMERCE
United States Patent and Trademark Office
Address: COMMISSIONER FOR PATENTS
P.O. Box 1450
Alexandria, Virginia 22313-1450
www.uspto.gov

APPLICATION NO.	FILING DATE	FIRST NAMED INVENTOR	ATTORNEY DOCKET NO.	CONFIRMATION NO.
11/490,910	07/21/2006	James Edward McCarthy JR.	06-ERC-173	3810

54279 7590 10/23/2008

PAUL V. KELLER, LLC
4585 LIBERTY RD.
SOUTH EUCLID, OH 44121

EXAMINER	
TRAN, BINH Q	
ART UNIT	**PAPER NUMBER**
3748	

MAIL DATE	DELIVERY MODE
10/23/2008	PAPER

Please find below and/or attached an Office communication concerning this application or proceeding.

The time period for reply, if any, is set in the attached communication.

UNITED STATES PATENT AND TRADEMARK OFFICE

Commissioner for Patents
United States Patent and Trademark Office
P.O. Box 1450
Alexandria, VA 22313-1450
www.uspto.gov

PAUL V. KELLER, LLC
4585 LIBERTY RD.
SOUTH EUCLID OH 44121

In re Application of: MCCARTHY, JAMES EDWARD JR., et al Serial No. 11/490,710 Filed: Jul. 21, 2006 Docket: 06-ERC-173 Title: FUEL INJECTION BEFORE TURBOCHARGER	DECISION ON PETITION UNDER 37 CFR § 1.144 and § 1.181

This is a decision on the renewed petition filed Sep. 8, 2008 under 37 CFR 1.181 requesting a corrected restriction requirement from the Office Action dated Oct. 6, 2005. The petition is considered pursuant to 37 CFR § 1.181, and no fee is required. The petition fee of $400.00 paid will be refunded upon request.

The petition is **granted.**

In finding petitioner's points of argument persuasive, the requested relief is granted. After consulting with the examiner, it was agreed that the election of species requirement will be further clarified. A new supplemental election of species will be sent in due course.

The application is being forwarded to Supervisory Patent Examiner of Art Unit 3754 for the examiner's preparation of an Office action. Any inquiry regarding this decision should be directed to Henry C. Yuen, Special Programs Examiner, at (571) 272-4856.

PETITION GRANTED.

Frederick R. Schmidt, Director
Technology Center 3700

UNITED STATES PATENT AND TRADEMARK OFFICE

Commissioner for Patents
United States Patent and Trademark Office
P.O. Box 1450
Alexandria, VA 22313-1450
www.uspto.gov

PAUL V. KELLER, LLC
4585 LIBERTY RD.
SOUTH EUCLID OH 44121

11/30/09

In re Application of:
MCCARTHY, JAMES EDWARD JR. et al.
Serial No.: 11/490,910
Filed: Jul. 21, 2006
Docket: 06-ERC-173
Title: FUEL INJECTION BEFORE TURBOCHARGER

: DECISION ON PETITION
: FOR CORRECT ERRORS IN
: OFFICE ACTION (REVIEW OF
: ELECTION OF SPECIES
: REQUIREMENT)

This is a decision on the second renewed petition filed on Dec. 18, 2008 by which in essence petitioner requests either withdrawal of election of species requirement to examine all claims or correct the election of species requirement. This petition is considered pursuant to 37 CFR 1.144 and 37 CFR 1.181, and no fee is required.

The petition is **DISMISSED AS PREMATURE**.

The record shows that:

On Oct. 23, 2008 the examiner issued a new election of species requirement in response to the applicant's request for a clearer Office action. The examiner clearly stated that this application contains claims directed to eight patentably distinct species, namely: Species I, Figures 1 and 5, (No claim is readable this embodiment); Species II, Figures 2 and 3 (Claims 1 and 10 are readable this embodiment); Species III, Figure 4 (Claims 1 and 10 are readable on this embodiment); Species IV, Figure 6 (Claims 1 and 10 are readable on this embodiment); Species V, Figure 7 (Claims 1 and 10 are readable on this embodiment); Species VI; Figure 8 (Claims 1 and 10 are readable on this embodiment); Species VII; Figure 9 (Claims 1-9, 11, 15, 19, and 22 are readable on this embodiment); Species VIII, Figures 10-13 (Claims 1, 12-14, 16-18, and 21-22 are readable on this embodiment). The species are independent or distinct because claims to the different species recite the mutually exclusive characteristics of such Species. In addition, these species are not obvious variants of each other based on the current record. The examiner also provided explanation and examples that the species are mutually exclusive from each other (pages 3-8 of the Office action). The examiner further stated there is a serious search burden (pages 9-10 of the Office action).

On Dec. 18, 2008, the applicant responded with the current petition to review the election of species requirement. Petitioner argues that the election of species requirement was improperly issued. In particular, petitioner argues that the examiner failed to explain (1) why the application contains independent or distinct claims to each of the inventions among which restriction is required, (2) the grouping and identification of the Species as illustrated, (3) propriety of the list of claims with respect to the Species, (4) reasons and examples to support a prima facie conclusion that the restricted inventions are independent or distinct, (5) illustration that species containing mutually exclusive characteristics of different species and (6) reasons to support the contention that there would be a serious burden on the examiner if restriction were not made.

Discussion and Analysis

A review of the record reveals that on Oct. 23, 2008, the examiner issued an election of species requirement. In the restriction requirement, the examiner stated in the Office action that eight species listed are mutually exclusive. In the petition, petitioner disagrees with the examiner's election of species requirement for various reasons as stated in the petition. Since the examiner did not have a chance to answer the questions raised by the petitioner and repeat the restriction of the Office Action of Oct. 23, 2008, then, the petition is hereby dismissed as premature in accordance with 37 CFR 1.181(c)[1] and (37 CFR 1.144[2]). In the next Office action, after receipt of the applicant's election with traverse, the examiner is directed to fully answer the applicant's arguments raised in the petition.

It is noted that the present application is under election of species requirement of Oct. 23, 2008 with one month to respond. As stated in 37CFR §1.181(f): The mere filing of a petition will not stay any period for reply that may by running against the application, nor act as a stay of other proceedings. The period to response to the election of species requirement of Oct. 23, 2008 remains unchanged.

Moreover, the applicant is required under 35 U.S.C. 121 to elect a single disclosed species for prosecution on the merits to which the claims shall be restricted if no generic claim is finally held to be allowable. As indicated on pages 9-11 of the Office action of Oct. 23, 2008, the requirement to be complete must include (i) an election of a species to be examined even though the requirement may be traversed (37 CFR 1.143) and (ii) identification of the claims encompassing the elected species, including any claims subsequently added. If the applicant disagrees with the examiner's identification of Species and grouping of the claims in the restriction requirement of Oct. 28, 2008, the applicant may present his/her own identification of Species and grouping of the claims with an election. In order to preserve a right to petition under

[1] 37 CFR 1.181(c) When a petition is taken from an action or requirement of an examiner in the ex parte prosecution of an application, or in the ex parte or inter partes prosecution of a reexamination proceeding, it may be required that there have been a proper request for reconsideration (§ 1.111) and a repeated action by the examiner. The examiner may be directed by the Director to furnish a written statement, within a specified time, setting forth the reasons for his or her decision upon the matters averred in the petition, supplying a copy to the petitioner.

[2] § 1.144 Petition from requirement for restriction: After a final requirement for restriction, the applicant, in addition to making any reply due on the remainder of the action, may petition the Director to review the requirement. Petition may be deferred until after final action on or allowance of claims to the invention elected, but must be filed not later than appeal. A petition will not be considered if reconsideration of the requirement was not requested (see § 1.181).

37 CFR 1.144, the election must be made with traverse. If the reply does not distinctly and specifically point out supposed errors in the election of species requirement of Oct. 23, 2008, the election shall be treated as an election without traverse. Traversal must be presented at the time of election in order to be considered timely. Failure to timely traverse the requirement will result in the loss of right to petition. Should applicant traverse on the ground that the species are not patentably distinct applicant should submit evidence or identify such evidence now of record showing the species to be obvious variants or clearly admit on the record that this is the case. In either instance, if the examiner finds one of the species unpatentable over the prior art, the evidence or admission may be used in a rejection under 35 U.S.C. 103 (a) of the other species.

Conclusion

For the reasons outlined above, petitioner's request to correct errors of the Office action or withdraw the election of species requirement is premature and cannot be granted. Upon the receipt of the applicant's response with election, the examiner is directed to reconsider the election of species requirement of Oct. 23, 2008 Office Action prior to a final restriction by the examiner.

The application is being forwarded to Supervisory Patent Examiner of Art Unit 3748 for waiting a response to the Office action of Oct. 23, 2008 from the applicant. The mere filing of a petition will not stay any period for reply that may be running against the application, nor act as a stay of other proceedings. Any request for reconsideration of this decision must be submitted within TWO (2) MONTHS from the mail date of this decision, 37 CFR 1.181(f). No extension of time under 37 CFR 1.136(a) is permitted. The reconsideration request should include a cover letter entitled "Renewed Petition under 37 CFR 1.181". Any inquiry regarding this decision should be directed to Henry Yuen, Special Programs Examiner, at (571) 272-4856.

The petition is DISMISSED AS PREMATURE.

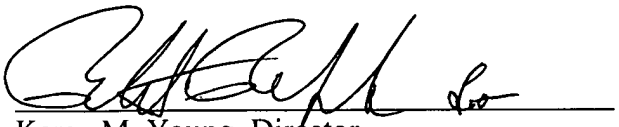

Karen M. Young, Director
Technology Center 3700

UNITED STATES PATENT AND TRADEMARK OFFICE

Commissioner for Patents
United States Patent and Trademark Office
P.O. Box 1450
Alexandria, VA 22313-1450
www.uspto.gov

PAUL V. KELLER, LLC
4585 LIBERTY RD.
SOUTH EUCLID OH 44121

COPY MAILED
DEC 12 2006
OFFICE OF PETITIONS

In re Application of :
McCarthy et al. :
Application No. 11/490, 911 : DECISION ON PETITION
Filed: July 21, 2006 : TO MAKE SPECIAL UNDER
Attorney Docket No. 06-ERC-174 : 37 CFR 1.102(c)(2)
:

This is a decision on the petition under 37 CFR 1.102(c)(2)(i), filed July 21, 2006, to make the above-identified application special based on the invention materially enhancing the quality of the environment as set forth in M.P.E.P. § 708.02, Section V.

The petition is **DISMISSED**.

A grantable petition to make an application special under 37 CFR 1.102(c)(2)(i) and MPEP § 708.02, Section V: Environmental Quality, must state that special status is sought because the invention materially enhances the quality of the environment by contributing to the restoration or maintenance of basic life-sustaining natural elements. If the disclosure is not clear on its face that the claimed invention materially enhances the quality of the environment by contributing to the restoration or maintenance of one of the basic life-sustaining natural elements, the petition must be accompanied by a statement by the applicant, assignee, or an attorney/agent registered to practice before the Office explaining how the materiality standard is met. No fee is required.

Petitioner's submission fails to meet the criteria set out with respect to materially enhancing the quality of the environment by contributing to the restoration or maintenance of basic life-sustaining natural elements, as set forth in M.P.E.P. § 708.02, Section V. The specification and claims as originally filed indicate the invention is directed to a pollution control device for diesel engines. However, the instant petition fails to meet the materiality standard of 37 CFR 1.102(c)(2). Although the instant invention may be directed to reduction of diesel emissions, the materiality standard of the rule has not been met, i.e. the petitioner has failed to explain how the claimed invention contributes in a significant, substantial, or noticeable manner to the maintenance of the basic life-sustaining natural elements. That the invention may reduce diesel emissions to a satisfactory extent in the sense of meeting EPA regulations effective in 2010, as stated, does not in itself meet the materiality standard. As a result, no contribution to the restoration or maintenance of basic life-sustaining natural elements has been persuasively shown.

Further correspondence with respect to this matter should be addressed as follows:

By Mail: Mail Stop PETITION
Commissioner for Patents

P. O. Box 1450
Alexandria, VA 22313-1450

By hand: U. S. Patent and Trademark Office
Customer Service Window, Mail Stop Petitions
Randolph Building
401 Dulany Street
Alexandria, VA 22314

By FAX: (571) 273-8300

Telephone inquiries concerning this decision should be directed to Ramesh Krishnamurthy at 571-272-4914, or to the undersigned at 571-272-7099.

All other inquiries concerning either the examination or status of the application should be directed to the Technology Center.

The application is being forwarded to the Technology Center Art Unit 3748 for action in its regular turn.

David Bucci
Petitions Examiner
Office of Petitions

UNITED STATES PATENT AND TRADEMARK OFFICE

Commissioner for Patents
United States Patent and Trademark Office
P.O. Box 1450
Alexandria, VA 22313-1450
www.uspto.gov

PAUL V. KELLER, LLC
4585 LIBERTY RD.
SOUTH EUCLID OH 44121

COPY MAILED
NOV 16 2006
OFFICE OF PETITIONS

In re Application of :
McCarthy et al. :
Application No. 11/490, 912 : DECISION ON PETITION
Filed: July 21, 2006 : TO MAKE SPECIAL UNDER
Attorney Docket No. 05-ERC-210 : 37 CFR 1.102(c)(2)
:

This is a decision on the petition under 37 CFR 1.102(c)(2)(i), filed July 21, 2006, to make the above-identified application special based on the invention materially enhancing the quality of the environment as set forth in M.P.E.P. § 708.02, Section V.

The petition is **DISMISSED**.

A grantable petition to make an application special under 37 CFR 1.102(c)(2)(i) and MPEP § 708.02, Section V: Environmental Quality, must state that special status is sought because the invention materially enhances the quality of the environment by contributing to the restoration or maintenance of basic life-sustaining natural elements. If the disclosure is not clear on its face that the claimed invention materially enhances the quality of the environment by contributing to the restoration or maintenance of one of the basic life-sustaining natural elements, the petition must be accompanied by a statement by the applicant, assignee, or an attorney/agent registered to practice before the Office explaining how the materiality standard is met. No fee is required.

Petitioner's submission fails to meet the criteria set out with respect to materially enhancing the quality of the environment by contributing to the restoration or maintenance of basic life-sustaining natural elements, as set forth in M.P.E.P. § 708.02, Section V. The specification and claims as originally filed indicate the invention is directed to a pollution control device for diesel engines. However, the instant petition fails to meet the materiality standard of 37 CFR 1.102(c)(2). Although the instant invention may be directed to reduction of diesel emissions, the materiality standard of the rule has not been met, i.e. the petitioner has failed to explain how the claimed invention contributes in a significant, substantial, or noticeable manner to the maintenance of the basic life-sustaining natural elements. That the invention may reduce diesel emissions to a satisfactory extent in the sense of meeting EPA regulations effective in 2010, as stated, does not in itself meet the materiality standard. As a result, no contribution to the restoration or maintenance of basic life-sustaining natural elements has been persuasively shown.

Further correspondence with respect to this matter should be addressed as follows:

By Mail: Mail Stop PETITION
Commissioner for Patents

P. O. Box 1450
Alexandria, VA 22313-1450

By hand: U. S. Patent and Trademark Office
Customer Service Window, Mail Stop Petitions
Randolph Building
401 Dulany Street
Alexandria, VA 22314

By FAX: (571) 273-8300

Telephone inquiries concerning this decision should be directed to Ramesh Krishnamurthy at 571-272-4914, or to the undersigned at 571-272-7099.

All other inquiries concerning either the examination or status of the application should be directed to the Technology Center.

The application is being forwarded to the Technology Center Art Unit 3748 for action in its regular turn.

David Bucci
Petitions Examiner
Office of Petitions

UNITED STATES PATENT AND TRADEMARK OFFICE

Commissioner for Patents
United States Patent and Trademark Office
P.O. Box 1450
Alexandria, VA 22313-1450
www.uspto.gov

MADAN, MOSSMAN & SRIRAM, P.C.
2603 AUGUSTA DRIVE
SUITE 700
HOUSTON TX 77057-5662

COPY MAILED

SEP 2 6 2008

In re Application of :
Tsili Wang. :
Application No. 11/490,920 : ON PETITION
Filed: July 21, 2006 :
Attorney Docket No. **594-41717-US** :

This is a decision on the petition under 37 CFR 1.78(a)(3), filed January 11, 2007, to accept an unintentionally delayed claim under 35 U.S.C. § 120 for the benefit of priority to the prior-filed non-provisional application set forth in the amendment filed concurrently with the instant petition. The petition will also be treated as a petition under 37 CFR 1.78(a)(6) to accept the unintentionally delayed claim under 35 U.S.C. § 119(e) for the benefit of priority of the prior-filed provisional application set forth in the amendment filed concurrently with the instant petition.

The petition under 37 CFR 1.78(a)(3) is **DISMISSED**.

The petition under 37 CFR 1.78(a)(6) is also **DISMISSED**.

A petition for acceptance of a claim for late priority under 37 CFR 1.78(a)(3) and 37 CFR 1.78(a)(6) is only applicable to those applications filed on, or after, November 29, 2000. Further, the petition is appropriate only after the expiration of the periods specified in 37 CFR 1.78(a)(5)(ii) and 37 CFR 1.78(a)(2)(ii).

The petition under 37 CFR 1.78(a)(3) must be accompanied by:

(1) the reference required by 35 U.S.C. § 120 and 37 CFR 1.78(a)(2)(i) of the prior-filed application, unless previously submitted;
(2) the surcharge set forth in § 1.17(t); and
(3) a statement that the entire delay between the date the claim was due under 37 CFR 1.78(a)(2)(ii) and the date the claim was filed was unintentional. The Director may require additional information where there is a question whether the delay was unintentional.

The petition under 37 CFR 1.78(a)(6) must be accompanied by:

(1) the reference required by 35 U.S.C. § 119(e) and 37 CFR 1.78(a)(5)(i) of the prior filed application, unless previously submitted.

(2) the surcharge set forth in § 1.17(t)

(3) a statement that the entire delay between the date the claim was due under 37 CFR 1.78(a)(5)(ii) and the date the claim was filed was unintentional. The Commissioner may require additional information where there is a question whether the delay was unintentional.

The petitions under 37 CFR 1.78(a)(3) and 37 CFR 1.78(a)(6) lack items (1) and (3) above.

The reference to add the prior-filed applications on page one following the first sentence of the specification is not acceptable as drafted since it improperly incorporates by reference one of the prior-filed applications. An incorporation by reference statement added after an application's filing date is not effective because no new matter can be added to an application after its filing date (*see* 35 U.S.C. § 132(a)). If an incorporation by reference statement is included in an amendment to the specification to add a benefit claim under 35 USC § 119 and 35 U.S.C. § 120 after the filing date of the application, the amendment would not be proper. When a benefit claim under 35 USC § 119 and 35 U.S.C. § 120 is submitted after the filing of an application, the reference to the prior application cannot include an incorporation by reference statement of the prior application. *See* Dart Industries v. Banner, 636 F.2d 684, 207 USPQ 273 (C.A.D.C. 1980). *Note* MPEP §§ 201.06(c) and 608.04(b). The amendment submitted on renewed petition cannot incorporate by reference an application not incorporated by reference on filing of the application.

It appears that the entire period of delay may not be unintentional given that an amendment was filed January 8, 2007, deleting the claim for priority to provisional applications 60/703,037 and 60/777,351. In accordance with MPEP section 201.11 (III)(G), where the benefit claim has been cancelled by applicant, it may be considered an intentional waiver of the right to priority for the prior applications. Furthermore, a petition for delayed benefit claim may be refused as not unintentional. In this regard, applicant must, in response to this decision, provide an adequate explanation of the facts and circumstances surrounding the deletion of the benefit claim and the subsequent submission of the current petition. Applicant is reminded that decisions on petition are handled on a case-by-case basis and, as such, further guidance cannot be given since the facts are not of record at this time.

Before the petition under 37 CFR § 1.78(a)(3) and 37 CFR 1.78(a)(6) can be granted, a renewed petition and either an Application Data Sheet signed in compliance with 37 CFR § 1.33(b) or an amendment (complying with the provisions of 37 CFR 1.121 and 37 CFR 1.76(b)(5)) to correct the above matters are required.

Further correspondence with respect to this matter should be addressed as follows:

By mail: Commissioner for Patents
United States Patent and Trademark Office
Box 1450
Alexandria, VA 22313-1450

By facsimile: (571) 273-8300
Attn: Office of Petitions

Telephone inquiries concerning this decision may be directed to Kenya A. McLaughlin, Petitions Attorney, at (571) 272-3222.

Anthony Knight
Supervisor
Office of Petitions

UNITED STATES PATENT AND TRADEMARK OFFICE

Commissioner for Patents
United States Patent and Trademark Office
P.O. Box 1450
Alexandria, VA 22313-1450
www.uspto.gov

MADAN, MOSSMAN & SRIRAM, P.C.
2603 AUGUSTA DRIVE
SUITE 700
HOUSTON, TX 77057-5662

COPY MAILED
DEC 09 2008

In re Application of :
Tsili Wang :
Application No. 11/490,920 : ON PETITION
Filed: July 21, 2006 :
Attorney Docket No. **594-41717-US** :

This is a decision on the renewed petition under 37 CFR 1.78(a)(3), filed October 7, 2008, to accept an unintentionally delayed claim under 35 U.S.C § 120 for the benefit of priority to the prior-filed non-provisional applications set forth in an amendment filed October 7, 2008. The petition will also be treated as a petition under 37 CFR 1.78(a)(6) to accept an unintentionally delayed claim under 35 U.S.C. § 119(e) for the benefit of priority of the prior-filed provisional applications set forth in the amendment filed October 7, 2008.

The petition under 37 CFR 1.78(a)(3) is **DISMISSED**.

The petition under 37 CFR 1.78(a)(6) is also **DISMISSED.**

Petitions for acceptance of claims for late priority under 37 CFR 1.78(a)(3) and 37 CFR 1.78(a)(6) are only applicable to those applications filed on, or after, November 29, 2000. Further, the petitions are appropriate only after the expiration of the periods specified in 37 CFR 1.78(a)(2)(ii) and 37 CFR 1.78(a)(5)(ii).

TREATMENT UNDER 37 CFR 1.78(a)(6)

The petition under 37 CFR 1.78(a)(6) must be accompanied by:

1. the reference required by 35 U.S.C. § 119(e) and 37 CFR 1.78(a)(5)(i) of the prior filed application, unless previously submitted.

2. the surcharge set forth in § 1.17(t)

3. a statement that the entire delay between the date the claim was due under 37 CFR 1.78(a)(5)(ii) and the date the claim was filed was unintentional. The Commissioner may require additional information where there is a question whether the delay was unintentional.

The petition under 37 CFR 1.78(a)(6) again lacks items (3) above.

It appears that the entire period of delay may not be unintentional given that an amendment was filed January 8, 2007, deleting the claim for priority to provisional applications 60/703,037 and 60/777,351. In accordance with MPEP section 201.11 (III)(G), where the benefit claim has been cancelled by applicant, it may be considered an intentional waiver of the right of priority for the prior applications. Furthermore, a petition for delayed benefit claim may be refused as intentional. In this regard, applicant must provide an adequate explanation of the facts and circumstances surrounding the deletion of the benefit claim and subsequent submission of the current petition. Petitioner is cautioned that it is not sufficient to merely state that the delay was unintentional; applicant must explain the facts and circumstances that led to the decision not to claim priority. Petitioner is further cautioned that a negative inference will be drawn if petitioner chooses to not provide the detailed explanation requested.

TREATMENT UNDER 37 CFR 1.78(a)(3)

In addition, the petition under 37 CFR 1.78(a)(3) must be accompanied by:

1. the reference required by 35 U.S.C § 120 and 37 CFR § 1.78(a)(2)(i) of the prior-filed application, unless previously submitted;

2. the surcharge set forth in § 1.17(t), and

3. a statement that the entire delay between the date the claim was due under 37 CFR 1.78(a)(2)(ii) and the date the claim was filed was unintentional. The Commissioner may require additional information where there is a question whether the delay was unintentional.

The petition under 37 CFR 1.78(a)(3) lacks item (1) above.

The reference filed October 7, 2008, is not proper because the delay in making the priority claim to provisional application 60/703,037 and 60/777,351 has not been established as unintentional.

Further correspondence with respect to this matter should be addressed as follows:

By mail: Commissioner for Patents
United States Patent and Trademark Office
Box 1450
Alexandria, VA 22313-1450

By facsimile: (571) 273-8300
Attn: Office of Petitions

Telephone inquiries concerning this decision may be directed to Kenya A. McLaughlin, Petitions Attorney, at (571) 272-3222.

Anthony Knight
Supervisor
Office of Petitions

UNITED STATES PATENT AND TRADEMARK OFFICE

UNITED STATES DEPARTMENT OF COMMERCE
United States Patent and Trademark Office
Address: COMMISSIONER FOR PATENTS
P.O. Box 1450
Alexandria, Virginia 22313-1450
www.uspto.gov

APPL NO.	FILING OR 371 (c) DATE	ART UNIT	FIL FEE REC'D	ATTY.DOCKET NO	DRAWINGS	TOT CLMS	IND CLMS
11/490,968	07/20/2006	2133	1200	BP5439	14	24	2

CONFIRMATION NO. 4170

51472
GARLICK HARRISON & MARKISON
P.O. BOX 160727
AUSTIN, TX 78716-0727

CORRECTED FILING RECEIPT

OC000000020492494

Date Mailed: 09/19/2006

Receipt is acknowledged of this regular Patent Application. It will be considered in its order and you will be notified as to the results of the examination. Be sure to provide the U.S. APPLICATION NUMBER, FILING DATE, NAME OF APPLICANT, and TITLE OF INVENTION when inquiring about this application. Fees transmitted by check or draft are subject to collection. Please verify the accuracy of the data presented on this receipt. **If an error is noted on this Filing Receipt, please mail to the Commissioner for Patents P.O. Box 1450 Alexandria Va 22313-1450. Please provide a copy of this Filing Receipt with the changes noted thereon. If you received a "Notice to File Missing Parts" for this application, please submit any corrections to this Filing Receipt with your reply to the Notice. When the USPTO processes the reply to the Notice, the USPTO will generate another Filing Receipt incorporating the requested corrections (if appropriate).**

Applicant(s)

Kambiz Shoarinejad, Los Angeles, CA;
Ahmadreza (Reza) Rofougaran, Newport Coast, CA;

Assignment For Published Patent Application

Broadcom Corporation, a California Corporation, Irvine, CA

Power of Attorney: None

Domestic Priority data as claimed by applicant

Foreign Applications

If Required, Foreign Filing License Granted: 08/10/2006

The country code and number of your priority application, to be used for filing abroad under the Paris Convention, is US11/490,968

Projected Publication Date: 01/24/2008

Non-Publication Request: No

Early Publication Request: No

Title

RFID decoding subsystem with pre-decode module

Preliminary Class

714

PROTECTING YOUR INVENTION OUTSIDE THE UNITED STATES

Since the rights granted by a U.S. patent extend only throughout the territory of the United States and have no effect in a foreign country, an inventor who wishes patent protection in another country must apply for a patent in a specific country or in regional patent offices. Applicants may wish to consider the filing of an international application under the Patent Cooperation Treaty (PCT). An international (PCT) application generally has the same effect as a regular national patent application in each PCT-member country. The PCT process **simplifies** the filing of patent applications on the same invention in member countries, but **does not result** in a grant of "an international patent" and does not eliminate the need of applicants to file additional documents and fees in countries where patent protection is desired.

Almost every country has its own patent law, and a person desiring a patent in a particular country must make an application for patent in that country in accordance with its particular laws. Since the laws of many countries differ in various respects from the patent law of the United States, applicants are advised to seek guidance from specific foreign countries to ensure that patent rights are not lost prematurely.

Applicants also are advised that in the case of inventions made in the United States, the Director of the USPTO must issue a license before applicants can apply for a patent in a foreign country. The filing of a U.S. patent application serves as a request for a foreign filing license. The application's filing receipt contains further information and guidance as to the status of applicant's license for foreign filing.

Applicants may wish to consult the USPTO booklet, "General Information Concerning Patents" (specifically, the section entitled "Treaties and Foreign Patents") for more information on timeframes and deadlines for filing foreign patent applications. The guide is available either by contacting the USPTO Contact Center at 800-786-9199, or it can be viewed on the USPTO website at http://www.uspto.gov/web/offices/pac/doc/general/index.html.

For information on preventing theft of your intellectual property (patents, trademarks and copyrights), you may wish to consult the U.S. Government website, http://www.stopfakes.gov. Part of a Department of Commerce initiative, this website includes self-help "toolkits" giving innovators guidance on how to protect intellectual property in specific countries such as China, Korea and Mexico. For questions regarding patent enforcement issues, applicants may call the U.S. Government hotline at 1-866-999-HALT (1-866-999-4158).

LICENSE FOR FOREIGN FILING UNDER
Title 35, United States Code, Section 184
Title 37, Code of Federal Regulations, 5.11 & 5.15

GRANTED

The applicant has been granted a license under 35 U.S.C. 184, if the phrase "IF REQUIRED, FOREIGN FILING LICENSE GRANTED" followed by a date appears on this form. Such licenses are issued in all applications where the conditions for issuance of a license have been met, regardless of whether or not a license may be required as set forth in 37 CFR 5.15. The scope and limitations of this license are set forth in 37 CFR 5.15(a) unless an earlier license has been issued under 37 CFR 5.15(b). The license is subject to revocation upon written notification. The date indicated is the effective date of the license, unless an earlier license of similar scope has been granted under 37 CFR 5.13 or 5.14.

This license is to be retained by the licensee and may be used at any time on or after the effective date thereof unless it is revoked. This license is automatically transferred to any related applications(s) filed under 37 CFR

1.53(d). This license is not retroactive.

The grant of a license does not in any way lessen the responsibility of a licensee for the security of the subject matter as imposed by any Government contract or the provisions of existing laws relating to espionage and the national security or the export of technical data. Licensees should apprise themselves of current regulations especially with respect to certain countries, of other agencies, particularly the Office of Defense Trade Controls, Department of State (with respect to Arms, Munitions and Implements of War (22 CFR 121-128)); the Bureau of Industry and Security, Department of Commerce (15 CFR parts 730-774); the Office of Foreign Assets Control, Department of Treasury (31 CFR Parts 500+) and the Department of Energy.

NOT GRANTED

No license under 35 U.S.C. 184 has been granted at this time, if the phrase "IF REQUIRED, FOREIGN FILING LICENSE GRANTED" DOES NOT appear on this form. Applicant may still petition for a license under 37 CFR 5.12, if a license is desired before the expiration of 6 months from the filing date of the application. If 6 months has lapsed from the filing date of this application and the licensee has not received any indication of a secrecy order under 35 U.S.C. 181, the licensee may foreign file the application pursuant to 37 CFR 5.15(b).

UNITED STATES PATENT AND TRADEMARK OFFICE

UNITED STATES DEPARTMENT OF COMMERCE
United States Patent and Trademark Office
Address: COMMISSIONER FOR PATENTS
P.O. Box 1450
Alexandria, Virginia 22313-1450
www.uspto.gov

BLAKELY SOKOLOFF TAYLOR & ZAFMAN LLP
1279 OAKMEAD PARKWAY
SUNNYVALE, CA 94085-4040

Mail Date: 04/21/2010

Applicant	: Marvin C. Espino	: DECISION ON REQUEST FOR
Patent Number	: 7593235	: RECALCULATION of PATENT
Issue Date	: 09/22/2009	: TERM ADJUSTMENT IN VIEW
Appliction No	: 11/490,996	: OF WYETH AND NOTICE OF INTENT TO
Filed	: 07/20/2006	: ISSUE CERTIFICATE OF CORRECTION
		:

The Request for Recalculation is **GRANTED** to the extent indicated.

The patent term adjustment has been determined to be **554** days. The USPTO will *sua sponte* issue a certificate of correction reflecting the amount of PTA days determined by the recalculation.

Prior to the issuance of the certificate of correction, the USPTO will afford patentee an opportunity to be heard and request reconsideration. Accordingly, patentee has **one month or thirty (30) days**, whichever is longer, to file a request for reconsideration of this patent term adjustment calculation. See 35 U.S.C. 154(b)(3)(B)(ii) and 37 CFR 1.322(a)(4). No extensions of time will be granted under 37 CFR 1.136.

Patentee should use document code PET.OP if electronically filing a request for reconsideration of this patent term adjustment calculation. The patentee must also include the information required by 37 CFR 1.705(b)(2) and the fee required by 37 CFR 1.18(e). If patentee does not file a timely request for reconsideration of this patent term adjustment calculation including the information required by 37 CFR 1.705(b)(2) and the fee required by 37 CFR 1.18(e), the USPTO will issue a certificate of correction reflecting the PTA determination noted above.

Patentee should be aware that in order to preserve the right to review in the United States District Court for the District of Columbia of the USPTO patent term adjustment determination, patentee must ensure that he or she also take the steps required under 35 U.S.C. 154(b)(4)(A) in a timely manner. Nothing in the request for recalculation should be construed as providing an alternative time frame for commencing a civil action under 35 U.S.C. 154(b)(4)(A).

Any questions concerning this decision should be directed to the Office of Patent Legal Administration at 571-272-7702.

UNITED STATES PATENT AND TRADEMARK OFFICE

UNITED STATES DEPARTMENT OF COMMERCE
United States Patent and Trademark Office
Address: COMMISSIONER FOR PATENTS
P.O. Box 1450
Alexandria, Virginia 22313-1450
www.uspto.gov

MCDERMOTT WILL & EMERY LLP
600 13TH STREET, NW
WASHINGTON, DC 20005-3096

Mail Date: 05/03/2010

Applicant	: Masanori Minamio	: DECISION ON REQUEST FOR
Patent Number	: 7629688	: RECALCULATION of PATENT
Issue Date	: 12/08/2009	: TERM ADJUSTMENT IN VIEW
Application No	: 11/491,029	: OF WYETH AND NOTICE OF INTENT TO
Filed	: 07/24/2006	: ISSUE CERTIFICATE OF CORRECTION
		:

The Request for Recalculation is **GRANTED** to the extent indicated.

The patent term adjustment has been determined to be **304** days. The USPTO will *sua sponte* issue a certificate of correction reflecting the amount of PTA days determined by the recalculation.

Prior to the issuance of the certificate of correction, the USPTO will afford patentee an opportunity to be heard and request reconsideration. Accordingly, patentee has **one month or thirty (30) days**, whichever is longer, to file a request for reconsideration of this patent term adjustment calculation. See 35 U.S.C. 154(b)(3)(B)(ii) and 37 CFR 1.322(a)(4). No extensions of time will be granted under 37 CFR 1.136.

Patentee should use document code PET.OP if electronically filing a request for reconsideration of this patent term adjustment calculation. The patentee must also include the information required by 37 CFR 1.705(b)(2) and the fee required by 37 CFR 1.18(e). If patentee does not file a timely request for reconsideration of this patent term adjustment calculation including the information required by 37 CFR 1.705(b)(2) and the fee required by 37 CFR 1.18(e), the USPTO will issue a certificate of correction reflecting the PTA determination noted above.

Patentee should be aware that in order to preserve the right to review in the United States District Court for the District of Columbia of the USPTO patent term adjustment determination, patentee must ensure that he or she also take the steps required under 35 U.S.C. 154(b)(4)(A) in a timely manner. Nothing in the request for recalculation should be construed as providing an alternative time frame for commencing a civil action under 35 U.S.C. 154(b)(4)(A).

Any questions concerning this decision should be directed to the Office of Patent Legal Administration at 571-272-7702.

UNITED STATES PATENT AND TRADEMARK OFFICE

UNITED STATES DEPARTMENT OF COMMERCE
United States Patent and Trademark Office
Address: COMMISSIONER FOR PATENTS
P.O. Box 1450
Alexandria, Virginia 22313-1450
www.uspto.gov

MCDERMOTT WILL & EMERY LLP
600 13TH STREET, NW
WASHINGTON, DC 20005-3096

Mail Date: 05/03/2010

Applicant	: Takeshi Kawabata	: DECISION ON REQUEST FOR
Patent Number	: 7667313	: RECALCULATION of PATENT
Issue Date	: 02/23/2010	: TERM ADJUSTMENT IN VIEW
Application No	: 11/491,033	: OF WYETH AND NOTICE OF INTENT TO
Filed	: 07/24/2006	: ISSUE CERTIFICATE OF CORRECTION
		:

The Request for Recalculation is **GRANTED** to the extent indicated.

The patent term adjustment has been determined to be **321** days. The USPTO will *sua sponte* issue a certificate of correction reflecting the amount of PTA days determined by the recalculation.

Prior to the issuance of the certificate of correction, the USPTO will afford patentee an opportunity to be heard and request reconsideration. Accordingly, patentee has **one month or thirty (30) days**, whichever is longer, to file a request for reconsideration of this patent term adjustment calculation. See 35 U.S.C. 154(b)(3)(B)(ii) and 37 CFR 1.322(a)(4). No extensions of time will be granted under 37 CFR 1.136.

Patentee should use document code PET.OP if electronically filing a request for reconsideration of this patent term adjustment calculation. The patentee must also include the information required by 37 CFR 1.705(b)(2) and the fee required by 37 CFR 1.18(e). If patentee does not file a timely request for reconsideration of this patent term adjustment calculation including the information required by 37 CFR 1.705(b)(2) and the fee required by 37 CFR 1.18(e), the USPTO will issue a certificate of correction reflecting the PTA determination noted above.

Patentee should be aware that in order to preserve the right to review in the United States District Court for the District of Columbia of the USPTO patent term adjustment determination, patentee must ensure that he or she also take the steps required under 35 U.S.C. 154(b)(4)(A) in a timely manner. Nothing in the request for recalculation should be construed as providing an alternative time frame for commencing a civil action under 35 U.S.C. 154(b)(4)(A).

Any questions concerning this decision should be directed to the Office of Patent Legal Administration at 571-272-7702.

UNITED STATES PATENT AND TRADEMARK OFFICE

Commissioner for Patents
United States Patent and Trademark Office
P.O. Box 1450
Alexandria, VA 22313-1450
www.uspto.gov

COPY MAILED

NOV 0 3 2006

OFFICE OF PETITIONS

Erik B. Flom
120 South Riverside Plaza, 22nd Floor
Chicago IL 60606-3912

In re Application of

BINNS, et al.
Application No. 11/491,035
Filed: July 21, 2006
Attorney Docket No. 7574-97864

DECISION ON PETITION
TO MAKE SPECIAL UNDER
37 CFR 1.102(c)(1)

This is a decision on the petition under 37 CFR 1.102(c)(1), filed July 21, 2006, to make the above-identified application special based on applicant's age as set forth in M.P.E.P. § 708.02, Section IV.

The petition is **GRANTED**.

A grantable petition to make an application special under 37 CFR 1.102(c)(1) and MPEP § 708.02, Section IV: Applicant's Age, must be accompanied by evidence showing that at least one of the applicants is 65 years of age, or more, such as a birth certificate or a statement by applicant. No fee is required.

The instant petition includes the birth certificate of Mark S. Blumberg, attesting to his age. Accordingly, the above-identified application has been accorded "special" status.

Telephone inquiries concerning this decision should be directed to the undersigned at 571-272-7253.

All other inquiries concerning either the examination or status of the application should be directed to the Technology Center.

The application is being forwarded to the Technology Center Art Unit 3626 for action on the merits commensurate with this decision.

Monica A. Graves
Petitions Examiner
Office of Petitions

UNITED STATES PATENT AND TRADEMARK OFFICE

Commissioner for Patents
United States Patent and Trademark Office
P.O. Box 1450
Alexandria, VA 22313-1450
www.uspto.gov

COPY MAILED

OCT 08 2009

OFFICE OF PETITIONS

MICROSOFT CORPORATION
ONE MICROSOFT WAY
REDMOND WA 98052-6399

In re Application of	:	
Robert M. Fries	:	
Application No. 11/491,048	:	DECISION ON PETITION
Filed: July 20, 2006	:	
Attorney Docket No. 92819.04	:	

This is a decision on the petition under the unintentional provisions of 37 CFR 1.137(b), filed August 18, 2009, to revive the above-identified application.

The petition is **GRANTED**.

This application became abandoned for failure to timely pay the issue and publication fees on or before August 17, 2009, as required by the Notice of Allowance and Fee(s) Due mailed May 15, 2009. Accordingly, the date of abandonment of this application is August 18, 2009. A Notice of Abandonment was mailed September 10, 2009.

The petition satisfies the requirements of 37 CFR 1.137(b) in that petitioner has supplied (1) the reply in the form of payment of the issue fee of $1,510.00 and publication fee of $300.00; (2) the petition fee of $1,620.00; and (3) a proper statement of unintentional delay.

Telephone inquiries concerning this decision should be directed to the undersigned at (571) 272-7751.

This application is being referred to the Office of Data Management for processing into a patent.

Joan Olszewski
Petitions Examiner
Office of Petitions

UNITED STATES PATENT AND TRADEMARK OFFICE

UNITED STATES DEPARTMENT OF COMMERCE
United States Patent and Trademark Office
Address: COMMISSIONER FOR PATENTS
P.O. Box 1450
Alexandria, Virginia 22313-1450
www.uspto.gov

APPLICATION NO.	FILING DATE	FIRST NAMED INVENTOR	ATTORNEY DOCKET NO.	CONFIRMATION NO.
11/491,065	07/21/2006	Brady David Esch	VNUS.069A6	4384

7590 06/07/2010

Tyco Healthcare Group L.P.
c/o I.P Legal Department Mark Kertz Esq.
15 Hampshire Street
Mansfield, MA 02048

EXAMINER	
HUPCZEY, JR, RONALD JAMES	
ART UNIT	PAPER NUMBER
3739	
NOTIFICATION DATE	DELIVERY MODE
06/07/2010	ELECTRONIC

DECISION GRANTING PETITION UNDER 37 CFR 1.138(d)

The declaration of express abandonment is recognized

This is in response to the petition under 37 CFR 1.138(d), requesting for a refund of any previously paid search fee and excess claims fee in the above-identified application.

The petition is granted.

The express abandonment is recognized. Any previously paid search fee and excess claims fee are hereby refunded.

Telephone inquiries should be directed to the Office of Data Management at (571) 272-4200.

Patent Publication Branch
Office of Data Management

UNITED STATES PATENT AND TRADEMARK OFFICE

UNITED STATES DEPARTMENT OF COMMERCE
United States Patent and Trademark Office
Address: COMMISSIONER FOR PATENTS
P.O. Box 1450
Alexandria, Virginia 22313-1450
www.uspto.gov

Manelii Denison & Selter PLLC
2000 M Street
7th Floor
Washington DC, DC 20036

Mail Date: 04/21/2010

Applicant	: Ian Tibbott	: DECISION ON REQUEST FOR
Patent Number	: 7648333	: RECALCULATION of PATENT
Issue Date	: 01/19/2010	: TERM ADJUSTMENT IN VIEW
Appliction No	: 11/491,080	: OF WYETH AND NOTICE OF INTENT TO
Filed	: 07/24/2006	: ISSUE CERTIFICATE OF CORRECTION
		:

The Request for Recalculation is **GRANTED** to the extent indicated.

The patent term adjustment has been determined to be **463** days. The USPTO will *sua sponte* issue a certificate of correction reflecting the amount of PTA days determined by the recalculation.

Prior to the issuance of the certificate of correction, the USPTO will afford patentee an opportunity to be heard and request reconsideration. Accordingly, patentee has **one month or thirty (30) days**, whichever is longer, to file a request for reconsideration of this patent term adjustment calculation. See 35 U.S.C. 154(b)(3)(B)(ii) and 37 CFR 1.322(a)(4). No extensions of time will be granted under 37 CFR 1.136.

Patentee should use document code PET.OP if electronically filing a request for reconsideration of this patent term adjustment calculation. The patentee must also include the information required by 37 CFR 1.705(b)(2) and the fee required by 37 CFR 1.18(e). If patentee does not file a timely request for reconsideration of this patent term adjustment calculation including the information required by 37 CFR 1.705(b)(2) and the fee required by 37 CFR 1.18(e), the USPTO will issue a certificate of correction reflecting the PTA determination noted above.

Patentee should be aware that in order to preserve the right to review in the United States District Court for the District of Columbia of the USPTO patent term adjustment determination, patentee must ensure that he or she also take the steps required under 35 U.S.C. 154(b)(4)(A) in a timely manner. Nothing in the request for recalculation should be construed as providing an alternative time frame for commencing a civil action under 35 U.S.C. 154(b)(4)(A).

Any questions concerning this decision should be directed to the Office of Patent Legal Administration at 571-272-7702.

UNITED STATES PATENT AND TRADEMARK OFFICE

Commissioner for Patents
United States Patent and Trademark Office
P.O. Box 1450
Alexandria, VA 22313-1450
www.uspto.gov

Lee & Morse, P.C.
3141 Fairview Park Drive
Suite 500
Falls Church, VA 22042

COPY MAILED

APR 0 6 2009

OFFICE OF PETITIONS

In re Application of	:	
Sang-min Shin et al.	:	
Application No. 11/491,103	:	DECISION ON
Filed: July 24, 2006	:	PETITION TO WITHDRAW
Attorney Docket No. 249/403 DIV	:	FROM RECORD
	:	

This is a decision on the Request to Withdraw as attorney or agent of record under 37 C.F.R. § 1.36(b), filed March 13, 2009.

The request is **NOT APPROVED**.

A review of the file record indicates that Susan S. Morse does not have power of attorney in this patent application nor is there any statement or evidence of record of employment in or otherwise being engaged in the proceedings in this patent application. Accordingly, the request to withdraw under 37 C.F.R. § 1.36(b) is not applicable.

All future communications from the Office will continue to be directed to the above-listed address until otherwise properly notified by the applicant.

Telephone inquires concerning this decision should be directed to Kimberly Inabinet at 571-272-4618.

Kimberly Inabinet
Petitions Examiner
Office of Petitions

UNITED STATES PATENT AND TRADEMARK OFFICE

Commissioner for Patents
United States Patent and Trademark Office
P.O. Box 1450
Alexandria, VA 22313-1450
www.uspto.gov

GODFREY & KAHN SC
780 NORTH WATER STREET
MILWAUKEE WI 53202

COPY MAILED

DEC 0 4 2008

OFFICE OF PETITIONS

In re Application of :
Lob, et al. : DECISION ON PETITION
Application No. 11/491,108 :
Filed: July 21, 2006 :
Attorney Docket No. 073743-0044 :

This is a decision on the petition to revive pursuant to 37 CFR 1.137(b), filed November 3, 2008.

The petition is **GRANTED.**

The above-identified application became abandoned for failure to pay the issue fee in response to the Notice of Allowance mailed on July 28, 2008. This Notice set a statutory period for reply of three (3) months. No issue fee having been received, the application became abandoned on October 29, 2008. The Office mailed a Notice of Abandonment on November 13, 2008.

With the instant petition, applicants paid the petition fee, made the proper statement of unintentional delay, and submitted the required reply in the form of the issue fee.

The application is being forwarded to the Office of Patent Publication for processing into a patent.

Telephone inquiries related to this decision should be directed to the undersigned at (571)272-3207.

Cliff Congo
Petitions Attorney
Office of Petitions

UNITED STATES PATENT AND TRADEMARK OFFICE

Commissioner for Patents
United States Patent and Trademark Office
P.O. Box 1450
Alexandria, VA 22313-1450
www.uspto.gov

CLARK & BRODY
1090 VERMONT AVENUE, NW
SUITE 250
WASHINGTON DC 20005

MAR 26 2007

In re Application of: MISSEY et al.	:	
Serial No.: 11/491,112	:	DECISION ON PETITION TO
Filed: July 24, 2006	:	MAKE SPECIAL FOR NEW
Title: HUNTING STRUCTURES UING DIE CUT	:	APPLICATION UNDER 37
SHEET MATERIAL FOR ENHANCED	:	C.F.R. § 1.102 & M.P.E.P. §
CONCEALMENT	:	708.02

This is a decision on the petition filed on March 2, 2007 to make the above-identified application special for accelerated examination procedure under 37 C.F.R. § 1.102(d).

The petition to make the application special is **DENIED**.

REGULATION AND PRACTICE

To be eligible for accelerated examination under 37 C.F.R. § 1.102(d) and pursuant to the "Change to Practice for Petitions in Patent Applications to Make Special and for Accelerated Examination" published in the Federal Register on June 26, 2006 (71 Fed. Reg. 36323), the following conditions must be satisfied:

1. The application must be a non-reissue utility or design application filed under 37 CFR 1.111(a);
2. The application, the petition and the required fees must be filed electronically using the USPTO's electronic filing system (EFS), or EFS-web; if not filed electronically, a statement asserting that EFS and EFS-web were not available during the normal business hours;
3. The application, at the time of filing, must be complete under 37 CFR 1.51 and in condition for examination;
4. The application must contain three or fewer independent claims and twenty or fewer total claims and the claims must be directed to a single invention;
5. The petition must be filed with the application.

The application as filed is not eligible for the accelerated examination under 37 C.F.R. § 1.102(d) because the petition was not filed with the application.

As noted in the policy statement referenced above, any petition to make special filed on or after the effective date must meet the new requirements set forth in the 71 Fed. Reg. 36323 notice. Applications filed before the effective date will not be eligible for the revised accelerated examination program. The effective date of the change in practice was August 25, 2006. Thus the instant petition must be reviewed under the revised practice and the instant application is ineligible.

The petition appears on its face to have been filed without recognition of the August 25, 2006 policy change to the petition to make special program. The changes to the program are substantial. A copy of Federal Register on June 26, 2006 (71 Fed. Reg. 36323) is being attached to the mailed decision for petitioner's review. Further guidance may be found at www.USPTO.gov under the accelerated examination link.

For the above-stated reasons, the petition is **DENIED**. The application will therefore be taken up by the examiner for action in its regular turn.

Any inquiry regarding this decision should be directed to J. Harrison, TC 3700 Special Program Examiner, at (571) 272-4449.

J. Harrison
Special Program Examiner
Technology Center 3700

UNITED STATES PATENT AND TRADEMARK OFFICE

Commissioner for Patents
United States Patent and Trademark Office
P.O. Box 1450
Alexandria, VA 22313-1450
www.uspto.gov

HEWLETT PACKARD COMPANY
P O BOX 272400, 3404 E. HARMONY ROAD
INTELLECTUAL PROPERTY ADMINISTRATION
FORT COLLINS CO 80527-2400

COPY MAILED

MAR 2 8 2008

OFFICE OF PETITIONS

In re Application of	:	
Risson et al.	:	
Application No.: 11/491189	:	DECISION ON
Filing or 371(c) Date: 07/24/2006	:	PETITION
Attorney Docket Number: 200502683-2	:	

This is a decision in response to the "Petition for Revival of Abandoned Patent Application on the Grounds of Unavoidable Delay Under 37 CFR 1.137(a)," filed June 18, 2007. The petition is properly treated as a petition to withdraw the holding of abandonment based upon failure to receive an Office action under 37 CFR 1.181. The delay in treating this petition is regretted.

The petition is **granted.**

The above-identified application became abandoned for failure to timely and properly reply to the Notice to File Missing Parts of Nonprovisional Application ("Notice"), mailed August 14, 2006. The Notice set a two (2) month period for reply. Extensions of time under 37 CFR 1.136(a) were available. No reply having been received, the application became abandoned on October 15, 2006. A Notice of Abandonment was mailed April 26, 2007.

With the present petition, Applicant has demonstrated non-receipt of the Notice by a preponderance of the evidence[1].

In view of the foregoing, the holding of abandonment is hereby withdrawn.

The petition fee has been refunded to Applicant's deposit account as authorized in the present petition.

Applicant also asserts that Appendix "C" filed with the petition is proprietary and is submitted solely for the purpose of rendering a Decision on the petition. Once a favorable Decision is rendered, Applicant requests the proprietary information be expunged from the records of the present application.

[1] Office records reveal that the Notice was returned to this Office by the USPS undelivered. Applicant subsequently received the Notice of Abandonment.

Applicant is advised that information analyzed in rendering Decisions may not be expunged in the event that a Decision is subsequently reviewed - the evidence analyzed in rendering the Decision must be available to support the Decision. However, in this instance, since Office records confirm that the Notice was returned to this Office as undeliverable by the United States Post Office, Appendix "C" was not necessary in order to demonstrate by a preponderance of the evidence that the Notice was not received. Applicant is further advised that expungement of proprietary information is available by way of petition under 37 CFR 1.59. See, also, MPEP 724.05, and 724.02, for the requirements of a grantable petition under 37 CFR 1.59.

The request to expunge is dismissed as inappropriate.

The application will be referred to the Office of Patent Application Processing for continued processing in due course.

Telephone inquiries concerning this matter should be directed to the undersigned at (571) 272-3232.

Derek L. Woods
Attorney
Office of Petitions

DATE 3-26-08

APPLICATION NUMBER 11/491,189

DOC CODE WFEE

DOC DATE 3/27/08

DELIVER THE ATTACHED FIFLE/DOCUMENT TO THE TC SCANNING CENTER

CONTRACTOR: THE ATTACHED FILE/DOCUMENT MUST BE INDEXED AND SCANNED INTO IFW WITHIN **8** WORK HOURS; UPLOADING OF THE SCANNED IMAGES SHOULD OCCUR NO LATER THAN **16** WORK HOURS FOLLOWING RECEIPT OF THIS REQUEST

AFTER SCANNING, ORIGINAL DOCUMENTS SHOULD BE BOXED IN ACCORDANCE WITH INSTRUCTIONS

OIPE
JUN 18 2007
PATENT & TRADEMARK OFFICE

Fee Copy

DA-CF

Atty. Dkt. No. 200502683-2

IN THE UNITED STATES PATENT AND TRADEMARK OFFICE

Applicant: Valery RISSON et. al.

Title: METHOD OF ESTIMATING ALIGNMENT

Appl. No.: 11/491,189

Filing Date: 07/24/2006

Examiner: Unassigned

Art Unit: 2853

Confirmation Number: 5784

PETITION FOR REVIVAL OF ABANDONED PATENT APPLICATION ON THE GROUNDS OF UNAVOIDABLE DELAY UNDER 37 C.F.R. § 1.137(a)

Mail Stop Petition
Commissioner for Patents
P.O. Box 1450
Alexandria, VA 22313-1450

Sir:

The above-identified application became abandoned for failure to file a timely and proper response to the Notice to File Missing Parts of Nonprovisional Application mailed August 14, 2006, which set a two-month period for response.

APPLICANT HEREBY PETITIONS FOR REVIVAL OF THIS APPLICATION

NOTE: A grantable petition requires the following items:

(1) Required reply;
(2) Petition fee (37 C.F.R. § 1.17(l));
(3) A showing that the entire delay in filing the required reply from the due date for the reply until the filing of a grantable petition was unavoidable; and
(4) Any required terminal disclaimer (37 C.F.R. § 1.137(d)).

Adjustment date: 03/27/2008 CKHLOK
06/20/2007 MAHMED1 00000009 082025 11491189
01 FC:1452 500.00 CR

06/20/2007 MAHMED1 00000009 082025 11491189
01 FC:1452 500.00 DA

(1) Required reply

The proposed reply for the above-noted Notice in the form of a Declaration/Power of Attorney executed by the inventors is enclosed herewith.

(2) Petition fee (37 C.F.R.§ 1.17(l))

Please charge Deposit Account No. 08-2025 in the amount of $500.00. A duplicate copy of this transmittal is enclosed.

The Commissioner is hereby authorized to charge any additional fees which may be required regarding this application, or credit any overpayment, to Deposit Account No. 80-2025.

(3) A showing that the entire delay in filing the required reply from the due date for the reply until the filing of a grantable petition was unavoidable.

Applicant submits that the Notice to File Missing Parts, mailed by the PTO on August 14, 2006 was not received. A review in PAIR indicates that on August 15, 2006 "Mail was returned to USPTO as undelivered". A printout of the PAIR record is attached as Appendix A. A printout of the Mail returned to USPTO is attached as Appendix B. Appendix B is comprised of copies of the Filing Receipt and Notice to File Missing Parts of Nonprovisional Application – both having a mailing date of August 14, 2006. The mailing address indicated in both the Filing Receipt and Notice is correct and Applicant is at a loss to understand why this mail was returned to the USPTO by the US Postal Service. In fact, the Notice of Abandonment was mailed to the same address on April 26, 2007 and was correctly delivered by the US Postal Service.

Also attached, as Appendix C, is a docket record of the responsible attorney. Had it been received, the subject Notice to File Missing Parts of Nonprovisional Application would have been entered and listed in this document under Attorney Docket No. 200502683-2. As can be seen, no such listing appears in this document.

The information contained in Appendix C submitted with this petition is proprietary and is submitted only for the purpose of rendering a decision on the subject petition. It is respectfully requested that, once a favorable decision has been reached, the proprietary information be expunged from the records of the subject application.

In view of the foregoing, Applicant requests the PTO to withdraw the holding of abandonment of this application.

(4) Any required terminal disclaimer (37 C.F.R. § 1.137(c)).

No terminal disclaimer is required in this application under 37 C.F.R. § 1.137(c) since this application was not filed before June 8, 1995.

Respectfully submitted,

Date June 18, 2007

By _____

HEWLETT PACKARD COMPANY
Customer Number: 22879

William T. Ellis
Attorney for Applicant
Registration No. 26,874

Telephone: (202) 672-5485
Facsimile: (202) 672-5399

UNITED STATES PATENT & TRADEMARK OFFICE
Washington, D.C. 20231

REQUEST FOR PATENT FEE REFUND

1 Date of Request: 03/26/08

2 Serial/Patent # 11/491189

	3 Please refund the following fee(s):	4 PAPER NUMBER	5 DATE FILED	6 AMOUNT
	Filing			$
	Amendment			$
	Extension of Time			$
	Notice of Appeal/Appeal			$
X	Petition	IFW	06/18/07	$ 500.00
	Issue			$
	Cert of Correction/Terminal Disc.			$
	Maintenance			$
	Assignment			$
	Other			$

7 TOTAL AMOUNT OF REFUND $ 500.00

8 TO BE REFUNDED BY:

	Treasury Check
X	Credit Deposit A/C #:

9 8 0 -- 2 0 2 5

10 REASON:

	Overpayment
	Duplicate Payment
X	No Fee Due (Explanation):

No fee for petition under 37 CFR 1.181.

11 REFUND REQUESTED BY:

TYPED/PRINTED NAME: Derek L. Woods TITLE: Attorney

SIGNATURE: /Derek L. Woods/ PHONE: 2-3232

OFFICE: Petitions

****

THIS SPACE RESERVED FOR FINANCE USE ONLY:

APPROVED: [signature] DATE: 3/27/08

Instructions for completion of this form appear on the back. After completion, attach white and yellow copies to the official file and mail or hand-carry to:

Office of Finance
Refund Branch
Crystal Park One, Room 802B

FORM PTO 1577
(01/90)

UNITED STATES PATENT AND TRADEMARK OFFICE

UNITED STATES DEPARTMENT OF COMMERCE
United States Patent and Trademark Office
Address: COMMISSIONER FOR PATENTS
P.O. Box 1450
Alexandria, Virginia 22313-1450
www.uspto.gov

APPLICATION NO.	FILING DATE	FIRST NAMED INVENTOR	ATTORNEY DOCKET NO.	CONFIRMATION NO.
11/491,190	07/24/2006	Robert H. Hyerle	200505210-2	5785

7590 04/21/2008

HEWLETT PACKARD COMPANY
P O BOX 272400, 3404 E. HARMONY ROAD
INTELLECTUAL PROPERTY ADMINISTRATION
FORT COLLINS, CO 80527-2400

EXAMINER	
WU, JINGGE	

ART UNIT	PAPER NUMBER
2624	

NOTIFICATION DATE	DELIVERY MODE
04/21/2008	ELECTRONIC

DECISION GRANTING PETITION UNDER 37 CFR 1.138(d)

The declaration of express abandonment is recognized

This is in response to the petition under 37 CFR 1.138(d), requesting for a refund of any previously paid search fee and excess claims fee in the above-identified application.

The petition is granted.

The express abandonment is recognized. Any previously paid search fee and excess claims fee are hereby refunded.

Telephone inquiries should be directed to the Office of Data Management at (571) 272-4200.

Patent Publication Branch
Office of Data Management

Adjustment date: 04/22/2008 DTERRY
02/25/2008 HMARZI1 00000077 082025
02 FC:1111 500.00 CR 11491190

DO NOT ENTER: /N.H./

Docket No.: R2184.0098/P098-D
(PATENT)

IN THE UNITED STATES PATENT AND TRADEMARK OFFICE

In re Letters Patent of:
Yuki Nakamura

Patent No.: 7,382,706

Issued: June 3, 2008

For: METHOD FOR CONTROLLING A MULTI-PULSE RECORD WAVEFORM AT HIGH VELOCITY IN A PHASE CHANGE OPTICAL MEDIUM

REQUEST FOR CERTIFICATE OF CORRECTION PURSUANT TO 37 CFR 1.323

Attention: Certificate of Correction Branch
Commissioner for Patents
P.O. Box 1450
Alexandria, VA 22313-1450

Dear Madam:

Upon reviewing the above-identified patent, Patentee noted typographical errors which should be corrected.

In the Specification:

Add the following paragraph after column 3, line 11:

The above-mentioned objects of the present invention are achieved by an optical recording apparatus which records a sequence of data blocks onto a recording layer of an optical recording medium by emitting light to the recording layer of the medium and changing a phase of a recording material of the recording layer, the apparatus comprising: a light source driver unit which applies a light source driving power to a light source to control emission of a light beam to the

recording layer of the medium, the driving power including a sequence of mark and space portions, each mark portion having a pulse width that corresponds to a multiple of a period T of a write clock based on a write data modulation method; a write power determination unit which sets a multi-pulse waveform of each mark portion of the driving power that includes a front-end portion, a multi-pulse portion and a tail-end portion, the front-end portion having a first pulse width t1 with a high-power write level Pw and starting from a middle-power erase level Pe, the multi-pulse portion including a sequence of write pulses each having a second pulse width t2 with the write level Pw and a third pulse width t3 with a low-power base level Pb, the multi-pulse portion having a given duty ratio z = t2/(t2 + t3), and the tail-end portion having a fourth pulse width t4 with the base level Pb and ending at the erase level Pe; and a controller which sets a linear velocity of rotation of the medium at a controlled speed, wherein the controller causes the write power determination unit to control the waveform when the linear velocity of rotation of the medium is set in a high-speed range higher than 5.6 m/s and up to 28 m/s, such that the first pulse width t1 of the front-end portion ranges 0.1T to 1T and the fourth pulse width t4 of the tail-end portion ranges 0.2T to 1.3T.

At column 5, lines 17-19, "SiOz, SiO, ZnO, SnO2, TiO2, InO2, Mg, ZrO2, etc., nitrides of S13N4, AlN, TiN, BN, ZrN, etc., sulphides of ZnS, InjS3, TaS<" should read --SiO_2, SiO, ZnO, SnO_2, TiO_2, InO_2, Mg, ZrO_2, etc., nitrides of Si_3N_4, AlN, TiN, BN, ZrN, etc., sulphides of ZnS, In_2S_3, TaS_4--;

At column 5, line 27, "3 and S" should read –3 and 5--;

At column 5, line 30, "5000 tun" should read –5000 nm--;

At column 5, lines 36-37, "AglnSbTe" should read --AgInSbTe--;

At column 5, line 40, "Si, F, S" should read--Si, P, S--;

At column 5, line 42, "Pd, Ft, Au" should read --Pd, Pt, Au--;

At column 5, line 44, "AglnSbTe" should read --AgInSbTe--;

At column 5, line 55, "AglnSbTe" should read --AgInSbTe--;

At column 5, line 56, "formula" should read --formula $Ag_{\alpha}In_{\beta}Sb_{\gamma}Te_{\delta}$--;

At column 5, line 58, "0.1 5 a£3.0" should read --$0.1 \leq \alpha \leq 3.0$--;

At column 5, line 58, "5.0 £$£12.0" should read --$5.0 \leq \beta \leq 12.0$--;

At column 5, line 58, "60.0 ^rS 72.0" should read --$60.0 \leq \gamma \leq 72.0$--;

At column 5, line 58, "522.0 £6"S 30. 0." should read --$22.0 \leq \delta \leq 30.0$.--;

At column 5, line 67, "17 am" should read –17 nm--;

At column 6, line 54, "Pe>>0.7S Poh" should read --$P_E = 0.75\ P_{OH}$--;

At column 6, line 55, "Poh" should read --P_{OH} --;

At column 6, line 62, "waveform;" should read --waveform,--;

At column 7, line 13, "RA" should read --R_A--;

At column 7, line 15, "Re" should read --R_B--;

At column 7, line 17, "RB" should read --R_B--;

At column 7, line 19, "RA" should read --R_A--;

At column 7, line 24, "Avo" should read --Δvo--;

At column 7, line 32, "vo £0.7vwh" should read --$vo \geq 0.7vwh$--;

At column 7, line 49, "Rb" should read --R_B--;

At column 7, line 51, "RA" should read --R_A--;

At column 7, line 57, "vo £3.0vwl" should read --vo $\leq$ 3.0vwl--;

At column 8, line 1, "Avo" should read --Δvo--;

At column 8, line 8, "Avo/vo<0.4" should read --Δvo/vo<0.4--;

At column 8, line 10, "Avo" should read --Δvo--;

At column 8, line 23, "0.1 < RA/Ra < 0.6" should read --0.1 < R_A/R_B < 0.6--;

At column 8, line 24, "RA" should read --R_A--;

At column 8, line 25, "Rb" should read --R_B--;

At column 8, line 35, "vwh/vwl £2.5" should read --vwh/vwl $\geq$ 2.5--;

At column 8, line 65, "lecoiding" should read --recording--;

At column 9, line 23, "(WPCU) IS" should read --(WPCU) 15--;

At column 9, line 37, "MPCU IS" should read --WPCU 15--;

At column 9, line 39, "(OWF)" should read --(OWP)--;

At column 9, line 66, "ST input" should read --5T input--;

At column 10, line 5, "corresponds a mark" should read --corresponds to a mark--;

At column 10, line 13, "WFDU 17" should read --WFPU 17--;

At column 10, line 19, "second pulse width "12" with" should read --second pulse width "t2" with--;

At column 10, line 23, "(t2 + t3)," should read --(t2 + t3).--;

At column 10, line 40, "rap" should read --mp--;

At column 10, line 50, "fourth pulse width 14" should read --fourth pulse width t4--;

At column 11, line 10, "tail-end pulse width "14"" should read --tail-end pulse width "t4"--;

At column 11, line 50, "requirements: -15 = asymmetry £ 5" should read --requirements: $-15 \leq$ asymmetry $\leq$ 5--;

At column 11, line 62, "U of the front-end" should read --t1 of the front-end--.

In the Claims:

In Claim 2, column 13, line 9, "$Ag_{\alpha}In_{\beta}Sb_{65}Te_{\delta}$" should read --$Ag_{\alpha}In_{\beta}Sb_{\gamma}Te_{\delta}$--.

The errors were found in the Substitute Specification as filed by applicant. Please charge our Credit Card in the amount of $100.00 covering the fee set forth in 37 CFR 1.20(a).

The errors now sought to be corrected are inadvertent typographical errors the correction of which does not involve new matter or require reexamination. Applicant notes that the errors sought to be corrected were caused by optical character recognition (OCR) errors which were inadvertently overlooked during preparation of the substitute specification filed on October 11, 2006. Applicant notes that the Specification as originally filed did not contain these errors.

Transmitted herewith is a proposed Certificate of Correction effecting such amendment. Patentee respectfully solicits the granting of the requested Certificate of Correction.

The Director is hereby authorized to charge any deficiency in the fees filed, asserted to be filed or which should have been filed herewith (or with any paper hereafter filed in this application by this firm) to our Deposit Account No. 04-1073, under Order No. R2184.0098/P098-D.

Dated: August 5, 2009

Respectfully submitted,

By _____
Mark J. Thronson
Registration No.: 33,082
Jennifer M. McCue
Registration No.: 55,440
DICKSTEIN SHAPIRO LLP
1825 Eye Street, NW
Washington, DC 20006-5403
(202) 420-2200
Attorneys for Applicant

DO NOT ENTER: /N.H./

PTO/SB/44 (09-07)
Approved for use through 08/31/2010. OMB 0651-0033
U.S. Patent and Trademark Office; U.S. DEPARTMENT OF COMMERCE
Under the Paperwork Reduction Act of 1995, no persons are required to respond to a collection of information unless it displays a valid OMB control number.
(Also Form PTO-1050)

UNITED STATES PATENT AND TRADEMARK OFFICE
CERTIFICATE OF CORRECTION

PATENT NO. : 7,382,706

APPLICATION NO. : 11/491,240

ISSUE DATE : June 3, 2008

INVENTOR(S) : Yuki Nakamura

It is certified that an error appears or errors appear in the above-identified patent and that said Letters Patent is hereby corrected as shown below:

In the Specification, the following errors are corrected:

Add the following paragraph after column 3, line 11:

The above-mentioned objects of the present invention are achieved by an optical recording apparatus which records a sequence of data blocks onto a recording layer of an optical recording medium by emitting light to the recording layer of the medium and changing a phase of a recording material of the recording layer, the apparatus comprising: a light source driver unit which applies a light source driving power to a light source to control emission of a light beam to the recording layer of the medium, the driving power including a sequence of mark and space portions, each mark portion having a pulse width that corresponds to a multiple of a period T of a write clock based on a write data modulation method; a write power determination unit which sets a multi-pulse waveform of each mark portion of the driving power that includes a front-end portion, a multi-pulse portion and a tail-end portion, the front-end portion having a first pulse width t1 with a high-power write level Pw and starting from a middle-power erase level Pe, the multi-pulse portion including a sequence of write pulses each having a second pulse width t2 with the write level Pw and a third pulse width t3 with a low-power base level Pb, the multi-pulse portion having a given duty ratio z = t2/(t2 + t3), and the tail-end portion having a fourth pulse width t4 with the base level Pb and ending at the erase level Pe; and a controller which sets a linear velocity of rotation of the medium at a controlled speed, wherein the controller causes the write power determination unit to control the waveform when the linear velocity of rotation of the medium is set in a high-speed range higher than 5.6 m/s and up to 28 m/s, such that the first pulse width t1 of the front-end portion ranges 0.1T to 1T and the fourth pulse width t4 of the tail-end portion ranges 0.2T to 1.3T.

MAILING ADDRESS OF SENDER (Please do not use customer number below):
Mark J. Thronson
DICKSTEIN SHAPIRO LLP
1825 Eye Street, NW
Washington, DC 20006-5403

DO NOT ENTER: /N.H./

PTO/SB/44 (09-07)
Approved for use through 08/31/2010. OMB 0651-0033
U.S. Patent and Trademark Office; U.S. DEPARTMENT OF COMMERCE
Under the Paperwork Reduction Act of 1995, no persons are required to respond to a collection of information unless it displays a valid OMB control number.
(Also Form PTO-1050)

At column 5, lines 17-19, "SiOz, SiO, ZnO, SnO2, TiO2, InO2, Mg, ZrO2, etc., nitrides of S13N4, AlN, TiN, BN, ZrN, etc., sulphides of ZnS, InjS3, TaS<" should read --SiO_2, SiO, ZnO, SnO_2, TiO_2, InO_2, Mg, ZrO_2, etc., nitrides of Si_3N_4, AlN, TiN, BN, ZrN, etc., sulphides of ZnS, In_2S_3, TaS_4--;

At column 5, line 27, "3 and S" should read –3 and 5--;

At column 5, line 30, "5000 tun" should read –5000 nm--;

At column 5, lines 36-37, "AgInSbTe" should read --AgInSbTe--;

At column 5, line 40, "Si, F, S" should read--Si, P, S--;

At column 5, line 42, "Pd, Ft, Au" should read --Pd, Pt, Au--;

At column 5, line 44, "AgInSbTe" should read --AgInSbTe--;

At column 5, line 55, "AgInSbTe" should read --AgInSbTe--;

At column 5, line 56, "formula" should read --formula $Ag_\alpha In_\beta Sb_\gamma Te_\delta$--;

At column 5, line 58, "0.1 5 a£3.0" should read --$0.1 \leq \alpha \leq 3.0$--;

At column 5, line 58, "5.0 £$£12.0" should read --$5.0 \leq \beta \leq 12.0$--;

At column 5, line 58, "60.0 ^rS 72.0" should read --$60.0 \leq \gamma \leq 72.0$--;

At column 5, line 58, "522.0 £6"S 30. 0." should read --$22.0 \leq \delta \leq 30.0$.--;

At column 5, line 67, "17 am" should read –17 nm--;

At column 6, line 54, "Pe>>0.7S Poh" should read --$P_E = 0.75\ P_{OH}$--;

At column 6, line 55, "Poh" should read –P_{OH} --;

At column 6, line 62, "waveform;" should read --waveform,--;

At column 7, line 13, "RA" should read --R_A--;

At column 7, line 15, "Re" should read –R_B--;

MAILING ADDRESS OF SENDER (Please do not use customer number below):
Mark J. Thronson
DICKSTEIN SHAPIRO LLP
1825 Eye Street, NW
Washington, DC 20006-5403

DO NOT ENTER: /N.H./

PTO/SB/44 (09-07)
Approved for use through 08/31/2010. OMB 0651-0033
U.S. Patent and Trademark Office; U.S. DEPARTMENT OF COMMERCE
Under the Paperwork Reduction Act of 1995, no persons are required to respond to a collection of information unless it displays a valid OMB control number.
(Also Form PTO-1050)

At column 7, line 17, "RB" should read --R_B--;

At column 7, line 19, "RA" should read --R_A--;

At column 7, line 24, "Avo" should read --Δvo--;

At column 7, line 32, "vo £0.7vwh" should read --vo ≥ 0.7vwh--;

At column 7, line 49, "Rb" should read --R_B--;

At column 7, line 51, "RA" should read --R_A--;

At column 7, line 57, "vo £3.0vwl" should read --vo ≤ 3.0vwl--;

At column 8, line 1, "Avo" should read --Δvo--;

At column 8, line 8, "Avo/vo<0.4" should read --Δvo/vo<0.4--;

At column 8, line 10, "Avo" should read --Δvo--;

At column 8, line 23, "0.1 < RA/Ra < 0.6" should read --0.1 < R_A/R_B < 0.6--;

At column 8, line 24, "RA" should read --R_A--;

At column 8, line 25, "Rb" should read --R_B--;

At column 8, line 35, "vwh/vwl £2.5" should read --vwh/vwl ≥ 2.5--;

At column 8, line 65, "lecoiding" should read --recording--;

At column 9, line 23, "(WPCU) IS" should read --(WPCU) 15--;

At column 9, line 37, "MPCU IS" should read --WPCU 15--;

At column 9, line 39, "(OWF)" should read --(OWP)--;

At column 9, line 66, "ST input" should read --5T input--;

At column 10, line 5, "corresponds a mark" should read --corresponds to a mark--;

MAILING ADDRESS OF SENDER (Please do not use customer number below):
Mark J. Thronson
DICKSTEIN SHAPIRO LLP
1825 Eye Street, NW
Washington, DC 20006-5403

DO NOT ENTER: /N.H./

PTO/SB/44 (09-07)
Approved for use through 08/31/2010. OMB 0651-0033
U.S. Patent and Trademark Office; U.S. DEPARTMENT OF COMMERCE
Under the Paperwork Reduction Act of 1995, no persons are required to respond to a collection of information unless it displays a valid OMB control number.
(Also Form PTO-1050)

At column 10, line 13, "WFDU 17" should read --WFPU 17--;

At column 10, line 19, "second pulse width "12" with" should read --second pulse width "t2" with--;

At column 10, line 23, "(t2 + t3)," should read --(t2 + t3).--;

At column 10, line 40, "rap" should read --mp--;

At column 10, line 50, "fourth pulse width 14" should read --fourth pulse width t4--;

At column 11, line 10, "tail-end pulse width "14"" should read --tail-end pulse width "t4"--;

At column 11, line 50, "requirements: -15 = asymmetry £ 5" should read --requirements: -15 ≤ asymmetry ≤ 5--;

At column 11, line 62, "U of the front-end" should read --t1 of the front-end--.

In the Claims, the following error is corrected:

In Claim 2, column 13, line 9, "$Ag_{\alpha}In_{\beta}Sb_{65}Te_{\delta}$" should read --$Ag_{\alpha}In_{\beta}Sb_{\gamma}Te_{\delta}$--.

MAILING ADDRESS OF SENDER (Please do not use customer number below):
Mark J. Thronson
DICKSTEIN SHAPIRO LLP
1825 Eye Street, NW
Washington, DC 20006-5403

UNITED STATES PATENT AND TRADEMARK OFFICE

UNITED STATES DEPARTMENT OF COMMERCE
United States Patent and Trademark Office
Address: COMMISSIONER FOR PATENTS
P.O. Box 1450
Alexandria, Virginia 22313-1450
www.uspto.gov

MCDERMOTT WILL & EMERY LLP
600 13TH STREET, NW
WASHINGTON, DC 20005-3096

Mail Date: 04/21/2010

Applicant	: Junji Hirase	: DECISION ON REQUEST FOR
Patent Number	: 7579227	: RECALCULATION of PATENT
Issue Date	: 08/25/2009	: TERM ADJUSTMENT IN VIEW
Appliction No	: 11/491,260	: OF WYETH AND NOTICE OF INTENT TO
Filed	: 07/24/2006	: ISSUE CERTIFICATE OF CORRECTION
		:

The Request for Recalculation is **GRANTED** to the extent indicated.

The patent term adjustment has been determined to be **246** days. The USPTO will *sua sponte* issue a certificate of correction reflecting the amount of PTA days determined by the recalculation.

Prior to the issuance of the certificate of correction, the USPTO will afford patentee an opportunity to be heard and request reconsideration. Accordingly, patentee has **one month or thirty (30) days**, whichever is longer, to file a request for reconsideration of this patent term adjustment calculation. See 35 U.S.C. 154(b)(3)(B)(ii) and 37 CFR 1.322(a)(4). No extensions of time will be granted under 37 CFR 1.136.

Patentee should use document code PET.OP if electronically filing a request for reconsideration of this patent term adjustment calculation. The patentee must also include the information required by 37 CFR 1.705(b)(2) and the fee required by 37 CFR 1.18(e). If patentee does not file a timely request for reconsideration of this patent term adjustment calculation including the information required by 37 CFR 1.705(b)(2) and the fee required by 37 CFR 1.18(e), the USPTO will issue a certificate of correction reflecting the PTA determination noted above.

Patentee should be aware that in order to preserve the right to review in the United States District Court for the District of Columbia of the USPTO patent term adjustment determination, patentee must ensure that he or she also take the steps required under 35 U.S.C. 154(b)(4)(A) in a timely manner. Nothing in the request for recalculation should be construed as providing an alternative time frame for commencing a civil action under 35 U.S.C. 154(b)(4)(A).

Any questions concerning this decision should be directed to the Office of Patent Legal Administration at 571-272-7702.

UNITED STATES PATENT AND TRADEMARK OFFICE

Commissioner for Patents
United States Patent and Trademark Office
P.O. Box 1450
Alexandria, VA 22313-1450
www.uspto.gov

ASHLEY N. MOORE
SUITE 4450
325 N. SAINT PAUL STREET
DALLAS TX 75201

COPY MAILED

JUL 24 2007

OFFICE OF PETITIONS

In re Application of :

SHORE, Michael W. :
Application No. 11/491,269 : DECISION ON PETITION
Filed: July 21, 2006 : TO WITHDRAW
Attorney Docket No. **MWS - 1PT** : FROM RECORD
:

This is a decision on the Request to Withdraw as attorney or agent of record under 37 C.F.R. § 1.36(b), filed June 26, 2007.

The request is **NOT APPROVED**.

A grantable request to withdraw as attorney/agent of record must be signed by every attorney/agent seeking to withdraw or contain a clear indication that one attorney is signing on behalf of another/others. A request to withdraw will not be approved unless at least 30 (thirty) days would remain between the date of approval and the later of the expiration date of a time to file a response or the expiration date of the maximum time period which can be extended under 37 C.F.R. § 1.136(a).

The Office cannot approve the request at this time since the reasons provided do not meet any of the conditions under the mandatory or permissive categories enumerated in 37 CFR 10.40. Section 10.40 of Title 37 of the Code of Federal Regulation states, "[a] practitioner shall not withdraw from employment in a proceeding before the Office without permission from the Office[.]" More specifically, 37 CFR 10.40 states, "[i]f paragraph (b) of this section is not applicable, a practitioner may not request permission to withdraw in matter pending before the Office unless such request or such withdrawal is" for one the permissive reasons listed in 37 CFR 10.40(c). The reasons set forth in the request, I am resigning from my current employer, does not meet any of the conditions set forth in 37 CFR 10.40.

All future communications from the Office will continue to be directed to the above-listed address until otherwise notified by applicant.

Telephone inquiries concerning this decision should be directed to Tredelle Jackson at 571-272- 2783.

Mónica A. Graves
Petitions Examiner
Office of Petitions

cc: **325 N. SAINT PAUL STREET**
SUITE 4450
DALLAS, TX 75201

UNITED STATES PATENT AND TRADEMARK OFFICE

Commissioner for Patents
United States Patent and Trademark Office
P.O. Box 1450
Alexandria, VA 22313-1450
www.uspto.gov

SCHIFF HARDIN, LLP
PATENT DEPARTMENT
6600 SEARS TOWER
CHICAGO IL 60606-6473

COPY MAILED

MAR 12 2008

OFFICE OF PETITIONS

In re Application of :
EICHENSEER, Mario :
Application No. 11/491,269 : DECISION ON REQUEST FOR
Filed: July 21, 2006 : REVOCATION OF POWER
Attorney Docket No. **P06,0230** : OF ATTORNEY

This is a decision on the Request to Revoke the attorney or agent of record under 37 C.F.R. § 1.36(a), filed September 06, 2007.

The request is **NOT APPROVED**.

A power of attorney, pursuant to § 1.32(b), may be revoked at any stage in the proceeding of a case by an applicant for patent (§ 1.41(b)) or an assignee of the entire interest of the applicant under § 3.71(b). Fewer than all of the applicants (or by fewer than the assignee of the entire interest of the applicant) may only revoke the power of attorney upon a showing of sufficient cause, and payment of the petition fee set forth § 1.17(h). For the assignee to take action a proper statement under § 3.73(b) is required.

The request cannot be approved because no statement under 3.73(b) was filed.

All future communications from the Office will continue to be directed to the above-listed address until otherwise notified by applicant.

Telephone inquiries concerning this decision should be directed to Tredelle Jackson at 571-272- 2783.

Tredelle D. Jackson
Petitions Examiner
Office of Petitions

cc: **SHORE, CHAN AND BRAGALONE LLP.**
425 N. ST. PAUL STREET
SUITE 4450
DALLAS, TX 75201

UNITED STATES PATENT AND TRADEMARK OFFICE

Commissioner for Patents
United States Patent and Trademark Office
P.O. Box 1450
Alexandria, VA 22313-1450
www.uspto.gov

LOEB & LOEB, LLP
321 NORTH CLARK
SUITE 2300
CHICAGO IL 60654-4746

MAILED

APR 05 2010

OFFICE OF PETITIONS

In re Application of :
Shukla et al. :
Application No. 11/491297 : ON PETITION
Filing or 371(c) Date: 07/22/2006 :
Attorney Docket Number: 211125-10003 :

This is a decision on the (1) "Petition Under 37 C.F.R. § 1.182 to Expedite Treatment of Concurrently Filed Petitions Under 37 C.F.R. § 1.48(a) and 37 C.F.R. § 1.183;" (2) , "Petition to Suspend Rules Under 37 C.F.R. § 1.183," and (3) "Petition to Correct Inventorship Under 37 C.F.R. 1.48(a)," all filed March 30, 2010.

The petition under 37 C.F.R. § 1.182 is **granted.**
The petition under 37 C.F.R. § 1.183 is **dismissed**
The petition under 37 C.F.R. § 1.48(a) is **dismissed**

Any request for reconsideration of this decision must be submitted within TWO (2) MONTHS from the mail date of this decision. Extensions of time under 37 CFR 1.136(a) are permitted. The reconsideration request should include a cover letter entitled "Renewed Petition Under [insert the applicable code section]."

This application was filed on July 22, 2006, and named Dr. Triveni P. Shulka and Gregory Halpern as joint inventors.

On March 30, 2010, the present petitions, along with an oath/declaration executed by Dr. Triveni P. Shulka, was filed. Petitioner provides that Mr. Halpren is unavailable to execute a statement that the error occurred without deceptive intent. In support of this assertion, Petitioner files a copy of a United States Postal Service Track & Confirm that a letter has been delivered to Mr. Halpren. The petition does not provide the contents of the letter sent to Mr. Halpren.

Petition under 37 CFR 1.48(a)

37 CFR 1.48(a) requires that the amendment be accompanied by:

> (1) a request to correct the inventorship that sets forth the desired inventorship change;
> (2) a statement from each person being added and from each person being deleted as an inventor that the error occurred without deceptive intention on his or her part;
> (3) an oath or declaration by each actual inventor or inventors as required by 37 CFR 1.63 or as permitted by 37 CFR 1.42, 1.43 or 1.47;
> (4) the fee set forth in 37 CFR 1.17 (i); and
> (5) the written consent of any existing assignee, if any of the originally named inventors has executed an assignment.

The MPEP further provides that:

> [i]n those situations where an inventor to be added refuses to submit a statement supporting the addition or such party cannot be reached, waiver under 37 CFR 1.183 of the requirement for a statement from that party would be appropriate upon a showing of such refusal or inability to reach the inventor. Every existing assignee of the original named inventors must give its consent to the requested correction. Where there is more than one assignee giving its consent, the extent of that interest (percentage) should be shown. Where no assignment has been executed by the inventors, or if deletion of a refusing inventor is requested, waiver will not be granted absent unequivocal support for the correction sought. Petitions under 37 CFR 1.47 are not applicable to the requirement for statements from each originally named inventor. (Emphasis supplied).

MPEP 201.03

Petition under 37 CFR 1.183

Suspension of the rules under 37 CFR 1.183 may be granted in an "extraordinary situation, when justice requires." The facts presented on the record do not adequately establish an extraordinary situation. Petitioner has not sufficiently established any special circumstances of equities that would require suspension of the rules in the interests of justice.

Showing of refusal or inability to reach the inventor

As to the showing of refusal or inability to reach, 37 CFR 1.47 provides for two separate and distinct situations, the first is when the whereabouts of the inventor are known, and a refusal to join in the application (or in this instance a refusal to execute the statement) is alleged, the MPEP provides

> Proof that a bona fide attempt was made to present a copy of the application papers (specification, including claims, drawings, and oath or declaration) to the nonsigning inventor for signature, but the inventor refused to accept delivery of the papers or expressly stated that the application papers should not be sent, may be sufficient. When there is an express oral refusal, that fact along with the time and place of the refusal must be stated in the statement of facts. When there is an express written refusal, a copy of the document evidencing that refusal must be

> made part of the statement of facts. The document may be redacted to remove material not related to the inventor's reasons for refusal.

MPEP 409.03(d).

In this instance, Petitioner provides that Mr. Halpren is unavailable to execute a statement that the error occurred without deceptive intent. In support of this assertion, Petitioner files a copy of a United States Postal Service Track & Confirm that a letter has been delivered to Mr. Halpren; however, the petition does not provide information as to the contents of the letter sent to Mr. Halpren, a copy of the letter, or whether the letter included a statement for Mr. Halpren to sign stating that the error occurred without deceptive intention on his part. Petitioner only provides that Mr. Halpren is unavailable.

Where inability to reach the inventor is alleged, the MPEP 409.03 provides:

> Where inability to find or reach a nonsigning inventor "after diligent effort" is the reason for filing under 37 CFR 1.47, a statement of facts should be submitted that fully describes the exact facts which are relied on to establish that a diligent effort was made. The fact that a nonsigning inventor is on vacation or out of town and is therefore temporarily unavailable to sign the declaration is not an acceptable reason for filing under 37 CFR 1.47. Furthermore, the fact that an inventor is hospitalized and/or is not conscious is not an acceptable reason for filing under 37 CFR 1.47. 37 CFR 1.43 may be available under these circumstances. See MPEP § 409.02. Such a petition under 37 CFR 1.47 will be dismissed as inappropriate. The statement of facts must be signed, where at all possible, by a person having firsthand knowledge of the facts recited therein. Statements based on hearsay will not normally be accepted. Copies of documentary evidence such as internet searches, certified mail return receipts, cover letters of instructions, telegrams, that support a finding that the nonsigning inventor could not be found or reached should be made part of the statement. The steps taken to locate the whereabouts of the nonsigning inventor should be included in the statement of facts. It is important that the statement contain facts as opposed to conclusions.

At the very least, an Internet search, or a search of telephone directories should be undertaken of the regions where it is suspected the non-signing inventor may reside. Copies of the results of such searches must be referred to in any renewed petition. It is important that the forthcoming communication contain statements of fact as opposed to conclusions. *See*, MPEP § 409.03(d).

Here, the whereabouts of Mr. Halpren are known, and a refusal to sign the statement, as opposed to the inability to find or reach Mr. Halpren, is appropriate. As noted supra, Petitioner must demonstrate that Mr. Halpren was presented with the statement that the error occurred without deceptive intent.

The facts presented on the record do not adequately establish an extraordinary situation. As such, the petition under 37 CFR 1.183 is dismissed, and the petition under 37 CFR 1.48(a) may not be granted at this time.

Further as to the petition under 37 CFR 1.48(a), and in particular 37 CFR 1.48(a)(3), 37 CFR 1.52(c) provides:

> (1) Any interlineation, erasure, cancellation or other alteration of the application papers filed must be made before the signing of any accompanying oath or declaration pursuant to § 1.63 referring to those application papers and should be dated and initialed or signed by the applicant on the same sheet of paper. Application papers containing alterations made after the signing of an oath or declaration referring to those application papers must be supported by a supplemental oath or declaration under § 1.67. In either situation, a substitute specification (§ 1.125) is required if the application papers do not comply with paragraphs (a) and (b) of this section.

A review of the oath/declaration reveals that it contains changes that have not been initialed. A Supplemental oath/declaration is required.

Conclusion

The petition is dismissed without prejudice. Petitioner should file a request for reconsideration of petition and include a copy of the letter sent to Mr. Halpren, or a statement as to the contents of the letter sent to Mr. Halpren, and a supplemental oath/declaration under 37 CFR 1.67.

Further correspondence with respect to this matter should be addressed as follows:

By mail:	Director for Patents PO Box 1450 Alexandria, VA 22313-1450
By FAX:	(571) 273-8300 Attn: Office of Petitions
By hand:	Customer Service Window Randolph Building 401 Dulany Street Alexandria, VA 22314

Telephone inquiries concerning this matter should be directed to the undersigned at (571) 272-3232.

/Derek L. Woods/

Derek L. Woods
Attorney
Office of Petitions

UNITED STATES PATENT AND TRADEMARK OFFICE

Commissioner for Patents
United States Patent and Trademark Office
P.O. Box 1450
Alexandria, VA 22313-1450
www.uspto.gov

LOEB & LOEB, LLP
321 NORTH CLARK
SUITE 2300
CHICAGO IL 60654-4746

MAILED

APR 29 2010

OFFICE OF PETITIONS

In re Application of :
Shukla et al. :
Application No. 11/491297 : ON PETITION
Filing or 371(c) Date: 07/22/2006 :
Attorney Docket Number: 211125-10003 :

This is a decision in response to the Supplemental oath/declaration filed April 7, 2010, and on the correspondence filed April 27, 2010, which is being treated as a request for reconsideration of a Petition to Suspend Rules Under 37 C.F.R. § 1.183, and a Petition to Correct Inventorship Under 37 C.F.R. 1.48(a).

The petition under 37 C.F.R. § 1.183 is **granted.**
The petition under 37 C.F.R. § 1.48(a) is **granted.**

Background

This application was filed on July 22, 2006, and named Dr. Triveni P. Shulka and Gregory Halpern as joint inventors.

The March 30, 2010 petitions

On March 30, 2010, petitions under 37 CFR 1.183 and 1.48(a), along with an oath/declaration executed by Dr. Triveni P. Shulka, were filed, along with a petition under 37 CFR 1.182 requesting expedited treatment of the petitions under 37 CFR 1.183 and 1.48(a).

As to inventor Halpern, petitioner provided that Mr. Halpren is unavailable to execute a statement that the error in inventorship occurred without deceptive intent. In support of this assertion, Petitioner filed a copy of a United States Postal Service Track & Confirm that a letter has been delivered to Mr. Halpren. The petition does not provide the contents of the letter sent to Mr. Halpren.

Also, a review of the oath/declaration revealed that it contained changes that had not been initialed.

The March 30, 2010 Decision on petition

The petitions were dismissed in a Decision mailed March 30, 2010, for failing to meet the requirements of a grantable petition under the applicable code sections. A renewed petition along with a supplemental oath/declaration were required.

The present request for reconsideration

The present request for reconsideration includes: (1) a request to correct the inventorship that sets forth the desired inventorship change; (2) a statement from each person being added and from each person being deleted as an inventor that the error occurred without deceptive intention on his or her part (a statement from inventor Greg Halpern has not been filed; however, Applicant has demonstrated with the filing of a grantable petition under 37 CFR 1.47(a), that as to inventor Halpern, this is an extraordinary situation requiring waiver of 37 CFR 1.48(a)(2)); (3) an oath or declaration by each actual inventor or inventors as required by 37 CFR 1.63 or as permitted by 37 CFR 1.42, 1.43 or 1.47; (4) the fee set forth in 37 CFR 1.17 (i); and (5) the written consent of any existing assignee, if any of the originally named inventors has executed an assignment.

The Supplemental oath/declaration filed April 7, 2010 has been entered and made of record.

Accordingly, the petitions are granted. A corrected Filing Receipt identifying the inventorship of the application is enclosed herewith.

The application file is being referred to Technology Center Art Unit 1781 for continued examination in the normal course of business.

Telephone inquiries concerning this matter should be directed to the undersigned at (571) 272-3232.

/Derek L. Woods/

Derek L. Woods
Attorney
Office of Petitions

Enclosure: Corrected Filing Receipt

UNITED STATES PATENT AND TRADEMARK OFFICE

UNITED STATES DEPARTMENT OF COMMERCE
United States Patent and Trademark Office
Address: COMMISSIONER FOR PATENTS
P.O. Box 1450
Alexandria, Virginia 22313-1450
www.uspto.gov

APPLICATION NUMBER	FILING or 371(c) DATE	GRP ART UNIT	FIL FEE REC'D	ATTY.DOCKET.NO	TOT CLAIMS	IND CLAIMS
11/491,297	07/22/2006	1781	2530	211125-10003	37	3

CONFIRMATION NO. 6705

CORRECTED FILING RECEIPT

69139
LOEB & LOEB, LLP
321 NORTH CLARK
SUITE 2300
CHICAGO, IL 60654-4746

Date Mailed: 04/29/2010

Receipt is acknowledged of this non-provisional patent application. The application will be taken up for examination in due course. Applicant will be notified as to the results of the examination. Any correspondence concerning the application must include the following identification information: the U.S. APPLICATION NUMBER, FILING DATE, NAME OF APPLICANT, and TITLE OF INVENTION. Fees transmitted by check or draft are subject to collection. Please verify the accuracy of the data presented on this receipt. **If an error is noted on this Filing Receipt, please submit a written request for a Filing Receipt Correction. Please provide a copy of this Filing Receipt with the changes noted thereon. If you received a "Notice to File Missing Parts" for this application, please submit any corrections to this Filing Receipt with your reply to the Notice. When the USPTO processes the reply to the Notice, the USPTO will generate another Filing Receipt incorporating the requested corrections**

Applicant(s)

Triveni Shukla, New Berlin, WI;

Assignment For Published Patent Application

Z Trim Holdings, Inc.

Power of Attorney: The patent practitioners associated with Customer Number 69139

Domestic Priority data as claimed by applicant

This application is a CIP of 10/669,731 09/24/2003 ABN

Foreign Applications

If Required, Foreign Filing License Granted: 08/11/2006

The country code and number of your priority application, to be used for filing abroad under the Paris Convention, is **US 11/491,297**

Projected Publication Date: Not Applicable

Non-Publication Request: No

Early Publication Request: No
**** SMALL ENTITY ****

Title

EMULSIFIED LIQUID SHORTENING COMPOSITIONS COMPRISING DIETARY FIBER GEL, WATER AND LIPID

Preliminary Class

426

PROTECTING YOUR INVENTION OUTSIDE THE UNITED STATES

Since the rights granted by a U.S. patent extend only throughout the territory of the United States and have no effect in a foreign country, an inventor who wishes patent protection in another country must apply for a patent in a specific country or in regional patent offices. Applicants may wish to consider the filing of an international application under the Patent Cooperation Treaty (PCT). An international (PCT) application generally has the same effect as a regular national patent application in each PCT-member country. The PCT process **simplifies** the filing of patent applications on the same invention in member countries, but **does not result** in a grant of "an international patent" and does not eliminate the need of applicants to file additional documents and fees in countries where patent protection is desired.

Almost every country has its own patent law, and a person desiring a patent in a particular country must make an application for patent in that country in accordance with its particular laws. Since the laws of many countries differ in various respects from the patent law of the United States, applicants are advised to seek guidance from specific foreign countries to ensure that patent rights are not lost prematurely.

Applicants also are advised that in the case of inventions made in the United States, the Director of the USPTO must issue a license before applicants can apply for a patent in a foreign country. The filing of a U.S. patent application serves as a request for a foreign filing license. The application's filing receipt contains further information and guidance as to the status of applicant's license for foreign filing.

Applicants may wish to consult the USPTO booklet, "General Information Concerning Patents" (specifically, the section entitled "Treaties and Foreign Patents") for more information on timeframes and deadlines for filing foreign patent applications. The guide is available either by contacting the USPTO Contact Center at 800-786-9199, or it can be viewed on the USPTO website at http://www.uspto.gov/web/offices/pac/doc/general/index.html.

For information on preventing theft of your intellectual property (patents, trademarks and copyrights), you may wish to consult the U.S. Government website, http://www.stopfakes.gov. Part of a Department of Commerce initiative, this website includes self-help "toolkits" giving innovators guidance on how to protect intellectual property in specific countries such as China, Korea and Mexico. For questions regarding patent enforcement issues, applicants may call the U.S. Government hotline at 1-866-999-HALT (1-866-999-4158).

LICENSE FOR FOREIGN FILING UNDER

Title 35, United States Code, Section 184

Title 37, Code of Federal Regulations, 5.11 & 5.15

GRANTED

The applicant has been granted a license under 35 U.S.C. 184, if the phrase "IF REQUIRED, FOREIGN FILING LICENSE GRANTED" followed by a date appears on this form. Such licenses are issued in all applications where

the conditions for issuance of a license have been met, regardless of whether or not a license may be required as set forth in 37 CFR 5.15. The scope and limitations of this license are set forth in 37 CFR 5.15(a) unless an earlier license has been issued under 37 CFR 5.15(b). The license is subject to revocation upon written notification. The date indicated is the effective date of the license, unless an earlier license of similar scope has been granted under 37 CFR 5.13 or 5.14.

This license is to be retained by the licensee and may be used at any time on or after the effective date thereof unless it is revoked. This license is automatically transferred to any related applications(s) filed under 37 CFR 1.53(d). This license is not retroactive.

The grant of a license does not in any way lessen the responsibility of a licensee for the security of the subject matter as imposed by any Government contract or the provisions of existing laws relating to espionage and the national security or the export of technical data. Licensees should apprise themselves of current regulations especially with respect to certain countries, of other agencies, particularly the Office of Defense Trade Controls, Department of State (with respect to Arms, Munitions and Implements of War (22 CFR 121-128)); the Bureau of Industry and Security, Department of Commerce (15 CFR parts 730-774); the Office of Foreign AssetsControl, Department of Treasury (31 CFR Parts 500+) and the Department of Energy.

NOT GRANTED

No license under 35 U.S.C. 184 has been granted at this time, if the phrase "IF REQUIRED, FOREIGN FILING LICENSE GRANTED" DOES NOT appear on this form. Applicant may still petition for a license under 37 CFR 5.12, if a license is desired before the expiration of 6 months from the filing date of the application. If 6 months has lapsed from the filing date of this application and the licensee has not received any indication of a secrecy order under 35 U.S.C. 181, the licensee may foreign file the application pursuant to 37 CFR 5.15(b).

UNITED STATES PATENT AND TRADEMARK OFFICE

UNITED STATES DEPARTMENT OF COMMERCE
United States Patent and Trademark Office
Address: COMMISSIONER FOR PATENTS
P.O. Box 1450
Alexandria, Virginia 22313-1450
www.uspto.gov

APPLICATION NO.	FILING DATE	FIRST NAMED INVENTOR	ATTORNEY DOCKET NO.	CONFIRMATION NO.
11/491,300	07/24/2006	Yoshihiko Moriyama	04329.3933	6668

22852 7590 05/17/2010

FINNEGAN, HENDERSON, FARABOW, GARRETT & DUNNER LLP
901 NEW YORK AVENUE, NW
WASHINGTON, DC 20001-4413

EXAMINER	
TRAN, BINH X	

ART UNIT	PAPER NUMBER
1713	

MAIL DATE	DELIVERY MODE
05/17/2010	PAPER

Please find below and/or attached an Office communication concerning this application or proceeding.

The time period for reply, if any, is set in the attached communication.

UNITED STATES PATENT AND TRADEMARK OFFICE

Commissioner for Patents
United States Patent and Trademark Office
P.O. Box 1450
Alexandria, VA 22313-1450
www.uspto.gov

FINNEGAN, HENDERSON, FARABOW, GARRETT & DUNNER
LLP
901 NEW YORK AVENUE, NW
WASHINGTON DC 20001-4413

Applicant: Moriyama et al.
Appl. No.: 11/491,300
Filing Date: July 24, 2006
Title: METHOD OF FORMING SEMICONDUCTOR LAYER
Attorney Docket No.: 04329.3933
Pub. No.: US 2007/0042120 A1
Pub. Date: February 22, 2007

This is a decision on the request for republication of patent application publication under 37 CFR 1.221(a), filed on April 23, 2010, for the above-identified application.

The request under 37 CFR 1.221(a) is DISMISSED.

37 CFR 1.221(a) requires "a copy of the application in compliance with the Office electronic filing system requirements and be accompanied by the publication fee set forth in § 1.18(d) and the processing fee set forth in § 1.17(i)". If the request for republication does not comply with the electronic filing system requirements, the republication will not take place and the publication fee set forth in § 1.18(d) will be refunded. The processing fee will be retained.

The applicant did not supply a copy of the application in compliance with the Office electronic filing system, as required by 37 CFR 1.221(a) because **the Applicant submitted the papers as a "Document for an existing application", which are entered into the application file, and not as a "Pre-Grant Publication" submission**. The request for republication does not comply with the electronic filing system requirements, thus republication will not take place.

Any request for republication under 37 CFR 1.221(a), must be submitted via the EFS system, as a Pre-Grant publication submission and must include a copy of the application in compliance with the Office electronic filing system requirements. The applicant is directed to the following website for additional instructions on how to submit a Pre-Grant Publication submission via the electronic filing system:

http://www.uspto.gov/ebc/portal/efs/pgpub_quickstart.pdf

Any questions or requests for reconsideration of the decision should be addressed as follows:

By mail to: Mail Stop PGPUB
Commissioner for Patents
P.O. Box 1450
Alexandria, Va. 22313-1450

By facsimile: 571-273-8300

Telephone inquiries regarding this correspondence should be directed to The Office of Data Management at 571-272-4200.

Tammy J. Koontz
Office of Data Management
United States Patent & Trademark Office

Adjustment date: 05/18/2010 KKING1
04723/2010 INTEFSW 00008760 11491300
01 FC:1504 -300.00 OP

Refund Ref:
05/18/2010 0030083800

Credit Card Refund Total: $300.00

Am Exp..: XXXXXXXXXX1003

UNITED STATES PATENT AND TRADEMARK OFFICE

Commissioner for Patents
United States Patent and Trademark Office
P.O. Box 1450
Alexandria, VA 22313-1450
www.uspto.gov

ERIK B. FLOM
120 SOUTH RIVERSIDE PLAZA, 22ND FLOOR
CHICAGO, IL 60606-3912

COPY MAILED

MAR 09 2007

OFFICE OF PETITIONS

In re Application of :
BINNS, Gregory S. et al. :
Application No. 11/491,325 : DECISION ON PETITION
Filed: July 21, 2006 : TO MAKE SPECIAL UNDER
Attorney Docket No. 7574-97865 : 37 CFR 1.102(c)(1)
:

This is a decision on the petition under 37 CFR 1.102(c)(1), filed July 21, 2006, to make the above-identified application special based on applicant's age as set forth in M.P.E.P. § 708.02, Section IV.

The petition is **GRANTED**.

A grantable petition to make an application special under 37 CFR 1.102(c)(1) and MPEP § 708.02, Section IV: Applicant's Age, must be accompanied by evidence showing that at least one of the applicants is 65 years of age, or more, such as a birth certificate or a statement by applicant. No fee is required.

The instant petition includes the birth certificate of inventor Mark Stuart Blumberg, attesting to his age. Accordingly, the above-identified application has been accorded "special" status.

Telephone inquiries concerning this decision should be directed to the undersigned at 571-272-7253.

All other inquiries concerning either the examination or status of the application should be directed to the Technology Center.

The application is being forwarded to the Technology Center Art Unit 3626 for action on the merits commensurate with this decision.

Monica A. Graves
Petitions Examiner
Office of Petitions

UNITED STATES PATENT AND TRADEMARK OFFICE

NOV 27 2006

Commissioner for Patents
United States Patent and Trademark Office
P.O. Box 1450
Alexandria, VA 22313-1450
www.uspto.gov

STEPHEN DONOVAN
ALLERGAN, INC.
2525 DUPONT DRIVE
Irvine CA 92612

In re Application of	:
Michael R. Robinson et al	:
Serial No.: 11/491,353	: PETITION DECISION
Filed: July 21, 2006	:
Attorney Docket No.: 18056-CIP1	:

This is a decision on the PETITION FOR ACCEPTANCE OF COLOR DRAWINGS UNDER 37 CFR 1.84(a)(2). The petition was filed July 21, 2006. Entry of color drawings requires: 1) three sets of the color drawings, 2) a proper amendment to the specification indicating color photographs or drawings are present in the file, and 3) the required fee under 37 CFR 1.17(h).

A review of the application record indicates that the petition lacks the required amendment to the specification. Applicants should submit a renewed petition accompanied by the required amendment as a separate paper. No additional petition fee will be required.

The petition is **DISMISSED**.

Should there be any questions with respect to this decision, please contact William R. Dixon, Jr., by mail addressed to: Director, Technology Center 1600, at the address listed above, or by telephone at 571-272-0519 or by facsimile transmission at 571-273-8300.

Bruce M. Kisliuk
Director, Technology Center 1600

UNITED STATES PATENT AND TRADEMARK OFFICE

Commissioner for Patents
United States Patent and Trademark Office
P.O. Box 1450
Alexandria, VA 22313-1450
www.uspto.gov

STEPHEN DONOVAN
ALLERGAN, INC.
2525 DUPONT DRIVE
Irvine CA 92612

OCT 19 2007

In re Application of :
Michael R. Robinson et al :
Serial No.: 11/491,353 : PETITION DECISION
Filed: July 21, 2006 :
Attorney Docket No.: 18056-CIP1 :

This is a decision on the renewed PETITION FOR ACCEPTANCE OF COLOR DRAWINGS UNDER 37 CFR 1.84(a)(2). The petition was filed December 19, 2006. Entry of color drawings requires: 1) three sets of the color drawings, 2) a proper amendment to the specification indicating color photographs or drawings are present in the file, and 3) the required fee under 37 CFR 1.17(h).

A review of the application record indicates that the renewed petition meets all of the requirements for acceptance of color drawings. This is not to be construed that all of the drawings are accepted, only that the color drawings are acceptable.

The petition is **DISMISSED**.

Should there be any questions with respect to this decision, please contact William R. Dixon, Jr., by mail addressed to: Director, Technology Center 1600, at the address listed above, or by telephone at 571-272-0519 or by facsimile transmission at 571-273-8300.

Bruce M. Kisliuk
Director, Technology Center 1600

UNITED STATES PATENT AND TRADEMARK OFFICE

Commissioner for Patents
United States Patent and Trademark Office
P.O. Box 1450
Alexandria, VA 22313-1450
www.uspto.gov

HELLER EHRMAN LLP
4350 LA JOLLA VILLAGE DRIVE #700
7TH FLOOR
SAN DIEGO, CA 92122

COPY MAILED

NOV 10 2008

In re Application of :
ZHENG, Yu :
Application No. 11/491,358 : DECISION ON PETITION
Filed: July 21, 2006 : TO WITHDRAW
Attorney Docket No. **44435-0004** : FROM RECORD
:

This is a decision on the Request to Withdraw as attorney or agent under 37 C.F.R. § 1.36(b) or 37 C.F.R. § 10.40 filed October 27, 2008.

The request is **NOT APPROVED**.

A review of the file record indicates that Steven A. Moore does not have power of attorney in this patent application nor is there any statement or evidence of record of employment in or otherwise being engaged in the proceedings in this patent application. Accordingly, the request to withdraw under 37 C.F.R. § 1.36(b) is not applicable.

All future communications from the Office will continue to be directed to the above-listed address until otherwise properly notified by the applicant.

Telephone inquires concerning this decision should be directed to Tredelle Jackson at 571-272-2783.

Tredelle D. Jackson
Paralegal Specialist
Office of Petitions

cc: **PATENT CATGORY CORPORATION**
ATTN: THOMAS DOVER
368 S. CHERYL LANE
INDUSTRY CA 91789

UNITED STATES PATENT AND TRADEMARK OFFICE

Commissioner for Patents
United States Patent and Trademark Office
P.O. Box 1450
Alexandria, VA 22313-1450
www.uspto.gov

KEVIN MARK KLUGHART
2516 LILLIAN MILLER PARKWAY
SUITE 115
DENTON TX 76210-7205

COPY MAILED
OCT 17 2006
OFFICE OF PETITIONS

In re Application of :
David William Holmes :
Application No. 11/491,386 : DECISION ON PETITION
Filed: July 22, 2006 : TO MAKE SPECIAL UNDER
Attorney Docket No. DWH-2006-006 : 37 CFR 1.102(c)(1)
:

This is a decision on the petition under 37 CFR 1.102(c)(1), filed July 22, 2006 and August 11, 2006 to make the above-identified application special based on applicant's age as set forth in M.P.E.P. § 708.02, Section IV.

The petition is **GRANTED**.

A grantable petition to make an application special under 37 CFR 1.102(c)(1) and MPEP § 708.02, Section IV: Applicant's Age, must be accompanied by evidence showing that at least one of the applicants is 65 years of age, or more, such as a birth certificate or a statement by applicant. No fee is required.

The instant petition includes a copy of the applicants Birth Certificate indicating that applicant is over 65 years of age. Accordingly, the above-identified application has been accorded "special" status.

Telephone inquiries concerning this decision should be directed to Charles Smoot at 571-272-3299.

All other inquiries concerning either the examination or status of the application should be directed to the Technology Center.

The application is being forwarded to the Technology Center Art Unit 2615 for action on the merits commensurate with this decision.

David Bucci
Petitions Examiner
Office of Petitions

UNITED STATES PATENT AND TRADEMARK OFFICE

Commissioner for Patents
United States Patent and Trademark Office
P.O. Box 1450
Alexandria, VA22313-1450
www.uspto.gov

BACHMAN & LAPOINTE, P.C. (P&W)
900 CHAPEL STREET
SUITE 1201
NEW HAVEN CT 06510-2802

COPY MAILED

SEP 10 2007

OFFICE OF PETITIONS

In re Application of
Francisco J. Cunha
Application No. 11/491,404
Filed: July 21, 2006
Attorney Docket No: **PA-0001948-US (06-260)**

ON PETITION

This is a decision on the petition filed November 29, 2006, under 37 CFR 1.59(b) to expunge information unintentionally submitted with the original disclosure of the application.

Petitioners argue that two documents entitled "miscellaneous incoming letter", filed with the original application were unintentionally filed, are unrelated to the instant application and that the failure to expunge and return said documents would cause harm to the party in interest.

Based on a review of the file and the documents entitled "miscellaneous incoming letter" and pursuant to MPEP § 724.05(IV) it is determined that the information contained therein is not important to a reasonable Examiner in deciding on patentability.

It is agreed therefore that justice would be served by an expungement of those documents entitled "miscellaneous incoming letter".

However, the present application as filed has been scanned and is maintained in the Office in an Image File Wrapper (IFW). The instant request is not for national security reasons, thus, the pages will not be removed from the IFW. Instead, the Office has "hidden" the documents entitled "miscellaneous incoming letter" as immaterial to the instant application and confidential. See *Reminder of the Proper Procedure for Filing Confidential Information Pursuant to MPEP 724.02(signed April 23, 2004)*, 1282 OG 107 (May 18, 2004).

Accordingly, the petition is **GRANTED**.

Telephone inquiries specific to this matter should be directed to the undersigned Petitions Attorney at (571) 272-3212.

Patricia Faison-Ball
Senior Petitions Attorney
Office of Petitions

SPE RESPONSE FOR CERTIFICATE OF CORRECTION

DATE 3/3/09 Paper No.: —

TO SPE OF : ART UNIT 3654

SUBJECT : Request for Certificate of Correction for Appl. No.: 11/491414 Patent No.: 7484686B2

Please respond to this request for a certificate of correction within 7 days.

FOR IFW FILES:

Please review the requested changes/corrections as shown in the **COCIN** document(s) in the IFW application image. No new matter should be introduced, nor should the scope or meaning of the claims be changed.

Please complete the response (see below) and forward the completed response to scanning using document code **COCX**.

FOR PAPER FILES:

Please review the requested changes/corrections as shown in the attached certificate of correction. Please complete this form (see below) and forward it with the file to:

Certificates of Correction Branch (CofC)
South Tower - 9A22
Palm Location 7580

Virginia Tolbert
Certificates of Correction Branch
703-308-9390 ext. 113

Thank You For Your Assistance

The request for issuing the above-identified correction(s) is hereby:
Note your decision on the appropriate box.

☒ **Approved**	All changes apply.
☐ **Approved in Part**	Specify below which changes **do not** apply.
☐ **Denied**	State the reasons for denial below.

Comments: _____

_____

_____

_____

_____

_____ 3654
SPE Art Unit

UNITED STATES PATENT AND TRADEMARK OFFICE

UNITED STATES DEPARTMENT OF COMMERCE
United States Patent and Trademark Office
Address: COMMISSIONER FOR PATENTS
P.O. Box 1450
Alexandria, Virginia 22313-1450
www.uspto.gov

SYNOPSYS, INC./BSTZ
BLAKELY SOKOLOFF TAYLOR & ZAFMAN LLP
1279 Oakmead Parkway
Sunnyvale, CA 94085-4040

Mail Date: 04/21/2010

Applicant	: Levent Oktem	: DECISION ON REQUEST FOR
Patent Number	: 7640519	: RECALCULATION of PATENT
Issue Date	: 12/29/2009	: TERM ADJUSTMENT IN VIEW
Appliction No	: 11/491,437	: OF WYETH AND NOTICE OF INTENT TO
Filed	: 07/21/2006	: ISSUE CERTIFICATE OF CORRECTION
		:

The Request for Recalculation is **GRANTED** to the extent indicated.

The patent term adjustment has been determined to be **599** days. The USPTO will *sua sponte* issue a certificate of correction reflecting the amount of PTA days determined by the recalculation.

Prior to the issuance of the certificate of correction, the USPTO will afford patentee an opportunity to be heard and request reconsideration. Accordingly, patentee has **one month or thirty (30) days**, whichever is longer, to file a request for reconsideration of this patent term adjustment calculation. See 35 U.S.C. 154(b)(3)(B)(ii) and 37 CFR 1.322(a)(4). No extensions of time will be granted under 37 CFR 1.136.

Patentee should use document code PET.OP if electronically filing a request for reconsideration of this patent term adjustment calculation. The patentee must also include the information required by 37 CFR 1.705(b)(2) and the fee required by 37 CFR 1.18(e). If patentee does not file a timely request for reconsideration of this patent term adjustment calculation including the information required by 37 CFR 1.705(b)(2) and the fee required by 37 CFR 1.18(e), the USPTO will issue a certificate of correction reflecting the PTA determination noted above.

Patentee should be aware that in order to preserve the right to review in the United States District Court for the District of Columbia of the USPTO patent term adjustment determination, patentee must ensure that he or she also take the steps required under 35 U.S.C. 154(b)(4)(A) in a timely manner. Nothing in the request for recalculation should be construed as providing an alternative time frame for commencing a civil action under 35 U.S.C. 154(b)(4)(A).

Any questions concerning this decision should be directed to the Office of Patent Legal Administration at 571-272-7702.

SPE RESPONSE FOR CERTIFICATE OF CORRECTION

Paper No.: _____

DATE : 06/18/09

TO SPE OF : ART UNIT ~~2817~~ 1793

SUBJECT : Request for Certificate of Correction for Appl. No.: 11/491,443 Patent No.: 7,306,643

Please respond to this request for a certificate of correction within 7 days.

FOR IFW FILES:

Please review the requested changes/corrections as shown in the **COCIN** document(s) in the IFW application image. No new matter should be introduced, nor should the scope or meaning of the claims be changed.

Please complete the response (see below) and forward the completed response to scanning using document code **COCX**.

FOR PAPER FILES:

Please review the requested changes/corrections as shown in the attached certificate of correction. Please complete this form (see below) and forward it with the file to:

Certificates of Correction Branch (CofC)

Randolph Square
Palm Location 7580

Should the changes be made **Valerie Jackson** **Certificates of Correction Branch**

703-756-1573

Thank You For Your Assistance

The request for issuing the above-identified correction(s) is hereby:
Note your decision on the appropriate box.

xApproved	**All** changes apply.
☐ **Approved in Part**	Specify below which changes **do not** apply.
☐ **Denied**	State the reasons for denial below.

Comments: _____

Roy Neil King 1793

SPE **Art Unit**

UNITED STATES PATENT AND TRADEMARK OFFICE

Commissioner for Patents
United States Patent and Trademark Office
P.O. Box 1450
Alexandria, VA 22313-1450
www.uspto.gov

BARLOW, JOSEPHS & HOLMES, LTD.
101 DYER STREET
5TH FLOOR
PROVIDENCE, RI 02903

MAILED

MAY 27 2010

OFFICE OF PETITIONS

In re Application of :
Carolyn R. Ferlise :
Application No. 11/491,460 : DECISION ON PETITION
Filed: July 21, 2006 :
Attorney Docket No.: A015 P01810-US :

This is a decision on the petition, filed March 26, 2010, which is being treated as a petition under 37 CFR 1.181 (no fee) requesting withdrawal of the holding of abandonment in the above-identified application.

The petition is **GRANTED**.

This application was held abandoned for failure to timely reply to a Notice of Non-Compliant Amendment (Notice) mailed March 25, 2009, which set a one- month period for reply. A Notice of Abandonment was mailed on January 13, 2010.

Petitioner asserts that the Notice of March 25, 2009 was not received.

A review of the application file reveals no irregularities in the mailing of the Notice of March 25, 2009. Thus, there is a strong presumption that the correspondence was properly mailed to the applicant at the correspondence address of record. In the absence of demonstrated irregularities in mailing of this Office action, petitioner must submit evidence to overcome this presumption. The following showing is required:

> Practitioner must state that the Office action was not received at the correspondence address of record, and that a search of the practitioner's record(s), including any file jacket or the equivalent, and the application contents, indicates that the Office action was not received. A copy of the record(s) used by the practitioner where the non-received Office action would have been entered had it been received is required.
>
> A copy of the practitioner's record(s) required to show non-receipt of the Office action should include the master docket for the firm. That is, if an one month period for reply was set in the nonreceived Office action, a copy of the master

> docket report showing all replies docketed for a date one month from the mail date of the nonreceived Office action must be submitted as documentary proof of nonreceipt of the Office action. If no such master docket exists, the practitioner should so state and provide other evidence such as, but not limited to, the following: the application file jacket; incoming mail log; calendar; reminder system; or the individual docket record for the application in question.

Petitioner has adequately supported his claim of non-receipt with such evidence.

In view of the above, the Notice of Abandonment is hereby vacated and the holding of abandonment withdrawn.

This application is being referred to the Technology Center AU 3677 technical support staff for **re-mailing** the Notice of March 25, 2009. The period for reply will run from the mailing date of the Office action.

Sherry D. Brinkley
Petitions Examiner
Office of Petitions

UNITED STATES DEPARTMENT OF COMMERCE
Patent and Trademark Office
ASSISTANT SECRETARY OF COMMERCE AND
COMMISSIONER OF PATENTS AND TRADEMARKS
Washington, DC 20231

9/21/09

Patent No. :7579809
Inventor(s) :Bowles et al.
Issued : 8/25/2009
Title : RECHARGEABLE WIRELESS ADAPTERS
Atty.doc./File No.

Request for Certificates of Correction

Consideration has been given to your request for the issuance of a Certificate of Correction, for the above – identified patent under the provisions of CFR 1.322.

Inspection of the application for the patent reveals claims 11,12,&13 is printed in accordance with the record please show evidence of supporting data or amendment. Therefore being no fault on the Patent and Trademark Office, It has no authority to issue a certificate of correction under the provision of 1.322.

In view of the forgoing, your request in this matter, is hereby denied.

Future written correspondence concerning this matter should be filed and directed to Decisions & Certificates of Correction Branch.

Henry Randall
Decisions & Certificates
of Correction Branch
(703) 756-1571

VAN PELT, YI & JAMES LLP
10050 N. FOOTHILL Blvd., Suite 200
Cupertine, CA 95014

HR

UNITED STATES DEPARTMENT OF COMMERCE
Patent and Trademark Office
ASSISTANT SECRETARY OF COMMERCE AND
COMMISSIONER OF PATENTS AND TRADEMARKS
Washington, DC 20231

9/21/09

Patent No. :7199470
Inventor(s) :George Bogner
Issued : 4/3/2007
Title : SURFACES-MONTABLE SEMICONDUCTORS COMPONENT AND METHOD FOR PRODUCING
Atty.doc./File No.

Request for Certificates of Correction

Consideration has been given to your request for the issuance of a Certificate of Correction, for the above – identified patent under the provisions of CFR 1.322.

Inspection of the application for the patent reveals item [56], is printed in accordance with the record please show evidence of supporting data or amendment. Therefore being no fault on the Patent and Trademark Office, It has no authority to issue a certificate of correction under the provision of 1.322.

In view of the forgoing, your request in this matter, is hereby denied.

Future written correspondence concerning this matter should be filed and directed to Decisions & Certificates of Correction Branch.

Henry Randall
Decisions & Certificates
of Correction Branch
(703) 756-1571

COHEN PONTANI, LEIBERMAN &PAVANE
SUITE 1210
551 Fifth Avenue, Suite 1210
NEW YORK, NEW YORK 10176

HR

UNITED STATES PATENT AND TRADEMARK OFFICE

UNITED STATES DEPARTMENT OF COMMERCE
United States Patent and Trademark Office
Address: COMMISSIONER FOR PATENTS
P.O. Box 1450
Alexandria, Virginia 22313-1450
www.uspto.gov

VENABLE LLP
P.O. Box 34385
Washington, DC 20043-9998

Mail Date: 04/21/2010

Applicant	: Esko Aulanko	: DECISION ON REQUEST FOR
Patent Number	: 7581631	: RECALCULATION of PATENT
Issue Date	: 09/01/2009	: TERM ADJUSTMENT IN VIEW
Appliction No	: 11/491,495	: OF WYETH AND NOTICE OF INTENT TO
Filed	: 07/24/2006	: ISSUE CERTIFICATE OF CORRECTION
		:

The Request for Recalculation is **GRANTED** to the extent indicated.

The patent term adjustment has been determined to be **659** days. The USPTO will *sua sponte* issue a certificate of correction reflecting the amount of PTA days determined by the recalculation.

Prior to the issuance of the certificate of correction, the USPTO will afford patentee an opportunity to be heard and request reconsideration. Accordingly, patentee has **one month or thirty (30) days**, whichever is longer, to file a request for reconsideration of this patent term adjustment calculation. See 35 U.S.C. 154(b)(3)(B)(ii) and 37 CFR 1.322(a)(4). No extensions of time will be granted under 37 CFR 1.136.

Patentee should use document code PET.OP if electronically filing a request for reconsideration of this patent term adjustment calculation. The patentee must also include the information required by 37 CFR 1.705(b)(2) and the fee required by 37 CFR 1.18(e). If patentee does not file a timely request for reconsideration of this patent term adjustment calculation including the information required by 37 CFR 1.705(b)(2) and the fee required by 37 CFR 1.18(e), the USPTO will issue a certificate of correction reflecting the PTA determination noted above.

Patentee should be aware that in order to preserve the right to review in the United States District Court for the District of Columbia of the USPTO patent term adjustment determination, patentee must ensure that he or she also take the steps required under 35 U.S.C. 154(b)(4)(A) in a timely manner. Nothing in the request for recalculation should be construed as providing an alternative time frame for commencing a civil action under 35 U.S.C. 154(b)(4)(A).

Any questions concerning this decision should be directed to the Office of Patent Legal Administration at 571-272-7702.

UNITED STATES PATENT AND TRADEMARK OFFICE

Commissioner for Patents
United States Patent and Trademark Office
P.O. Box 1450
Alexandria, VA 22313-1450
www.uspto.gov

STOEL RIVES LLP
900 SW FIFTH AVENUE
SUITE 2600
PORTLAND OR 97204-1268

COPY MAILED

NOV 2 6 2008

In re Application of :
BAEK, Andrew et al. :
Application No. 11/491,505 : DECISION ON PETITION
Filed: July 21, 2006 : TO WITHDRAW
Attorney Docket No. **36372/1:1** : FROM RECORD
:

This is a decision on the Request to Withdraw as attorney or agent of record under 37 C.F.R. § 1.36(b), filed February 20, 2008.

The request is **APPROVED.**

A grantable request to withdraw as attorney/agent of record must be signed by every attorney/agent seeking to withdraw or contain a clear indication that one attorney is signing on behalf of another/others. A request to withdraw will not be approved unless at least 30 (thirty) days would remain between the date of approval and the later of the expiration date of a time to file a response or the expiration date of the maximum time period which can be extended under 37 C.F.R. § 1.136(a).

The request was signed by Nathan D. Scherer on behalf of all attorneys of record who are associated with customer No. 03528. All attorneys/agents associated have been withdrawn. Applicant is reminded that there is no attorney of record at this time.

The request to change the correspondence address of record is not acceptable as the requested correspondence address is not that of: (1) the first named signing inventor; or (2) an intervening assignee of the entire interest under 37 C.F.R 3.71. All future communications from the Office will be directed to the first named signing inventor.

There are no outstanding office actions at this time.

Telephone inquiries concerning this decision should be directed to the undersigned at 571-272-4231.

Michelle R. Eason
Paralegal Specialist
Office of Petitions

cc: **ANDREW BAEK**
40 APPLE VALLEY
IRVINE, CA 92602

cc: **MICAH D. STOLOWITZ**
STOLOWITZ FORD COWGER LLP
621 SW MORRISON STREET
SUITE 600
PORTLAND, OR 97205

UNITED STATES PATENT AND TRADEMARK OFFICE

Commissioner for Patents
United States Patent and Trademark Office
P.O. Box 1450
Alexandria, VA 22313-1450
www.uspto.gov

LAHIVE & COCKFIELD LLP
FLOOR 30 SUITE 3000
ONE POST OFFICE SQUARE
BOSTON MA 02109

MAILED

JUL 19 2010

OFFICE OF PETITIONS

In re Application of	:	
Rock, et al.	:	
Application No. 11/491,506	:	ON REQUEST FOR
Filed: July 21, 2006	:	RECONSIDERATION OF
Attorney Docket Number: UMY-089CN2	:	PATENT TERM ADJUSTMENT

This is a decision on the petition under 37 CFR 1.705(b), filed December 28, 2009. Applicant believes that the correct total PTA to date is not 44 days as calculated by the Office as of the mailing of the initial determination of patent term adjustment, but rather 303 days.

Insofar as the instant application for patent term adjustment requests reconsideration of the patent term adjustment as it relates to the Office's failure to issue the patent within 3 years of the filing date, the application for patent term adjustment under 37 CFR 1.705(b) is **DISMISSED as PREMATURE**.

Knowledge of the actual date the patent issues is required to calculate the amount, if any, of additional patent term patentee is entitled to for Office failure to issue the patent within 3 years. See § 1.702(b). (This is true even where a request for continued examination (RCE) was filed). The computer will not undertake the § 1.702(b) calculation until the actual date of issuance of the patent has been determined. Likewise, the computer will not calculate any further Office delay under § 1.702(a)(4) or applicant delay under § 1.704(c)(10) until the actual date of issuance of the patent has been determined. As such, the Office can not make a determination on the correctness of the patent term adjustment until the patent has issued.

Requesting reconsideration of the patent term adjustment to be indicated on the patent under 37 CFR 1.705(b) based on the initial determination of patent term adjustment and a projected issuance date of the patent (or even the filing date of the request for continued examination) is premature. Accordingly, it is appropriate to dismiss as premature such a request.

Rather than file a request for reconsideration of patent term adjustment under 37 CFR 1.705(b) contesting the 37 CFR 1.702(b) calculation at the time of the mailing of the notice of allowance, applicants are advised that they may wait until the time of the issuance of the patent and file a

request for reconsideration of the patent term adjustment pursuant to 37 CFR 1.705(d). As the USPTO does not calculate the amount of time earned pursuant to 37 CFR 1.702(b) until the time of the issuance of the patent, the Office will consider any request for reconsideration of the patent term adjustment due to an error in the calculation of 37 CFR 1.702(b) to be timely if the request for reconsideration is filed within two months of the issuance of the patent. However, as to all other bases for contesting the initial determination of patent term adjustment received with the notice of allowance, applicant must timely file an application for patent term adjustment prior to the payment of the issue fee[1].

However, Applicants also point out that they should be assessed additional delay of seven (7) days for the submission of an IDS on November 12, 2008. As the IDS was submitted subsequent to an Amendment on November 5, 2008, an additional seven (7) days of applicant delay should be accorded pursuant to 37 CFR 1.704(c)(8).

Receipt of the $200.00 fee set forth in 37 CFR 1.18(e) for consideration of the application for patent term adjustment is acknowledged.

Any request for reconsideration of the patent term adjustment indicated on the patent must be timely filed within 2 months after issuance pursuant to 37 CFR 1.705(d).

In view of the above, the corrected determination of Patent Term Adjustment at the time of the mailing of the Notice of Allowance is **thirty-seven (37) days** (227 days of PTO delay, reduced by 190 days of applicant delay).

The application is being referred to the Office of Data Management for issuance of the patent.

Telephone inquiries specific to this decision should be directed to Petitions Attorney Cliff Congo at (571) 272-3207.

Anthony Knight
Director
Office of Petitions

---

[1] For example, if applicant disputes both the calculation of patent term adjustment under 37 CFR 1.702(a)(1) for Office failure to mail a first Office action or notice of allowance not later than fourteen months after the date on which the application was filed and under 37 CFR 1.702(b) for Office failure to issue a patent within three years of the actual filing date of the application, then applicant must still timely file an application for patent term adjustment prior to the payment of the issue fee to contest the calculation of Office delay in issuing a first Office action or notice of allowance. See 37 CFR 1.705(b) and 35 U.S.C. 154(b)(3)(B). A dispute as to the calculation of the §1.702(a)(1) period raised on request for reconsideration of patent term adjustment under 37 CFR 1.705(d) will be dismissed as untimely filed.

PTA Calculations for Application: 11/491506			
Application Filing Date:	07/21/2006	PTO Delay (PTO):	227
Issue Date of Patent:		Three Years:	0
Pre-Issue Petitions:	0	Applicant Delay (APPL):	183
Post-Issue Petitions:	0	Total PTA (days):	37
PTO Delay Adjustment:	-7		

File Contents History

Number	Date	Contents Description	PTO	APPL	START
68	07/18/2010	ADJUSTMENT OF PTA CALCULATION BY PTO		7	
60	10/01/2009	MAIL NOTICE OF ALLOWANCE			
59	09/30/2009	ISSUE REVISION COMPLETED			
58	09/30/2009	DOCUMENT VERIFICATION			
57	09/30/2009	NOTICE OF ALLOWANCE DATA VERIFICATION COMPLETED			
56	09/30/2009	EXAMINER'S AMENDMENT COMMUNICATION			
55	09/09/2009	EXAMINER INTERVIEW SUMMARY RECORD (PTOL - 413)			
54	09/30/2009	NOTICE OF ALLOWABILITY			
53	07/29/2009	INFORMATION DISCLOSURE STATEMENT CONSIDERED			
52	07/29/2009	INFORMATION DISCLOSURE STATEMENT CONSIDERED			
51	02/24/2009	INFORMATION DISCLOSURE STATEMENT CONSIDERED			
49	07/29/2009	REFERENCE CAPTURE ON IDS			
48	07/29/2009	INFORMATION DISCLOSURE STATEMENT (IDS) FILED		0	46
47	08/27/2009	DATE FORWARDED TO EXAMINER			
46	07/29/2009	RESPONSE AFTER NON-FINAL ACTION		91	40
45	07/29/2009	REQUEST FOR EXTENSION OF TIME - GRANTED			
44	07/29/2009	INFORMATION DISCLOSURE STATEMENT (IDS) FILED			
43	07/29/2009	INFORMATION DISCLOSURE STATEMENT (IDS) FILED			
42	02/24/2009	INFORMATION DISCLOSURE STATEMENT (IDS) FILED			

41	02/24/2009	INFORMATION DISCLOSURE STATEMENT (IDS) FILED			
40	01/29/2009	MAIL NON-FINAL REJECTION			
39	01/27/2009	NON-FINAL REJECTION			
38	11/12/2008	REFERENCE CAPTURE ON IDS			
37	11/12/2008	INFORMATION DISCLOSURE STATEMENT (IDS) FILED			
36	11/05/2008	SUBSTITUTE SPECIFICATION FILED			
35	11/05/2008	NEW OR ADDITIONAL DRAWING FILED			
34	01/26/2009	DATE FORWARDED TO EXAMINER			
33	11/05/2008	RESPONSE TO ELECTION / RESTRICTION FILED		92	23
32	11/05/2008	REQUEST FOR EXTENSION OF TIME - GRANTED			
31	04/06/2007	INFORMATION DISCLOSURE STATEMENT CONSIDERED			
30	10/02/2007	INFORMATION DISCLOSURE STATEMENT CONSIDERED			
29	11/12/2008	INFORMATION DISCLOSURE STATEMENT CONSIDERED			
24	11/12/2008	INFORMATION DISCLOSURE STATEMENT (IDS) FILED			
23	05/05/2008	MAIL RESTRICTION REQUIREMENT	227		-1
22	05/01/2008	REQUIREMENT FOR RESTRICTION / ELECTION			
21	10/02/2007	REFERENCE CAPTURE ON IDS			
20	10/02/2007	INFORMATION DISCLOSURE STATEMENT (IDS) FILED			
19	10/02/2007	INFORMATION DISCLOSURE STATEMENT (IDS) FILED			
18	04/06/2007	REFERENCE CAPTURE ON IDS			
17.7	04/06/2007	INFORMATION DISCLOSURE STATEMENT (IDS) FILED			
17	04/06/2007	INFORMATION DISCLOSURE STATEMENT (IDS) FILED			
16	03/01/2007	PG-PUB ISSUE NOTIFICATION			
15	01/31/2007	IFW TSS PROCESSING BY TECH CENTER COMPLETE			
14	01/31/2007	CASE DOCKETED TO EXAMINER IN GAU			
13	11/09/2006	PRELIMINARY AMENDMENT			
12	07/21/2006	PRELIMINARY AMENDMENT			
11	11/22/2006	APPLICATION DISPATCHED FROM OIPE			

10	11/22/2006	APPLICATION IS NOW COMPLETE			
9	11/09/2006	PAYMENT OF ADDITIONAL FILING FEE/PREEXAM			
8	07/21/2006	CLAIM PRELIMINARY AMENDMENT			
7	11/09/2006	APPLICANT HAS SUBMITTED NEW DRAWINGS TO CORRECT CORRECTED PAPERS PROBLEMS			
6	11/09/2006	APPLICANT HAS SUBMITTED A NEW SPECIFICATION TO CORRECT CORRECTED PAPERS PROBLEMS			
5	08/10/2006	NOTICE MAILED--APPLICATION INCOMPLETE--FILING DATE ASSIGNED			
4	08/02/2006	CLEARED BY L&R (LARS)			
3	08/01/2006	REFERRED TO LEVEL 2 (LARS) BY OIPE CSR			
2	07/27/2006	IFW SCAN & PACR AUTO SECURITY REVIEW			
1	07/21/2006	INITIAL EXAM TEAM NN			

Search Another: Application# [ ] Search

EXPLANATION OF PTA CALCULATION

EXPLANATION OF PTE CALCULATION

To go back, right click here and select Back. To go forward, right click here and select Forward. To refresh, right click here and select Refresh.

Back to OASIS | Home page

SPE RESPONSE FOR CERTIFICATE OF CORRECTION

Paper No.: _____

DATE : 12-17-08

TO SPE OF : ART UNIT 1624

SUBJECT : Request for Certificate of Correction for Appl. No.: 11/491540 Patent No.: 7449576

Please respond to this request for a certificate of correction within 7 days.

FOR IFW FILES:

Please review the requested changes/corrections as shown in the **COCIN** document(s) in the IFW application image. No new matter should be introduced, nor should the scope or meaning of the claims be changed.

Please complete the response (see below) and forward the completed response to scanning using document code **COCX**.

FOR PAPER FILES:

Please review the requested changes/corrections as shown in the attached certificate of correction. Please complete this form (see below) and forward it with the file to:

Certificates of Correction Branch (CofC)
South Tower - 9A22
Palm Location 7580

Certificates of Correction Branch
703-308-9390 ext. 123

Thank You For Your Assistance

The request for issuing the above-identified correction(s) is hereby:
Note your decision on the appropriate box.

- ☒ **Approved** — **All** changes apply.
- ☐ **Approved in Part** — Specify below which changes **do not** apply.
- ☐ **Denied** — State the reasons for denial below.

Comments: _____

SPE **Art Unit** 1624

UNITED STATES PATENT AND TRADEMARK OFFICE

Commissioner for Patents
United States Patent and Trademark Office
P.O. Box 1450
Alexandria, VA 22313-1450
www.uspto.gov

CORNING INCORPORATED
INTELLECTUAL PROPERTY DEPARTMENT, SP-TI-3-1
CORNING NY 14831

COPY MAILED
NOV 24 2008

In re Application of :
Michael DEJONG :
Application No. 11/491,556 : DECISION ON PETITION
Filed: July 24, 2006 :
Attorney Docket No. HE0322 :

This is a decision on the petition under the unintentional provisions of 37 CFR 1.137(b), filed October 20, 2008, to revive the above-identified application.

The petition is **GRANTED**.

The application became abandoned for failure to timely reply within the meaning of 37 CFR 1.113 to the final Office action, mailed February 12, 2008, which set a shortened statutory period for reply of three (3) months. A three (3) month extension of time under the provisions of 37 CFR 1.136(a) was obtained. Accordingly, the application became abandoned on August 13, 2008.

The petition satisfies the requirements of 37 CFR 1.137(b) in that petitioner has supplied (1) the reply in the form of a Request for Continued Examination (RCE) and fee of $810.00, and the submission required by 37 CFR 1.114; (2) the petition fee of $1,620.00; and (3) a proper statement of unintentional delay. Accordingly, the reply to the final Office action of February 12, 2008 is accepted as having been unintentionally delayed.

Telephone inquiries concerning this decision should be directed to the undersigned at (571) 272-4231.

This application is being referred to Technology Center AU 2883 for processing of the RCE and for appropriate action by the Examiner in the normal course of business on the amendment submitted in accordance with 37 CFR 1.114.

/Michelle R. Eason/

Michelle R. Eason
Paralegal Specialist
Office of Petition

PTO/SB/130 (03-08)
Approved for use through 05/31/2008. OMB 0651- 0031
U.S. Patent and Trademark Office; U.S. DEPARTMENT OF COMMERCE
Under the Paperwork Reduction Act of 1995, no persons are required to respond to a collection of information unless it contains a valid OMB control number

PETITION TO MAKE SPECIAL BASED ON AGE FOR ADVANCEMENT OF EXAMINATION UNDER 37 CFR 1.102(c)(1)

Application Information

Application Number	11/491,558	Confirmation Number	5651	Filing Date	2006-07-24
Attorney Docket Number (optional)	586C-078	Art Unit	3611	Examiner	
First Named Inventor	CHRISTOPHER S. CROWELL				
Title of Invention	FOLDABLE DISPLAY SYSTEM				

Attention: Office of Petitions

An application may be made special for advancement of examination upon filing of a petition showing that the applicant is 65 years of age, or more. No fee is required with such a petition. See 37 CFR 1.102(c)(1) and MPEP 708.02 (IV).

APPLICANT HEREBY PETITIONS TO MAKE SPECIAL FOR ADVANCEMENT OF EXAMINATION IN THIS APPLICATION UNDER 37 CFR 1.102(c)(1) and MPEP 708.02 (IV) ON THE BASIS OF THE APPLICANT'S AGE.

A grantable petition requires one of the following items:
(1) Statement by one named inventor in the application that he/she is 65 years of age, or more; or
(2) Certification by a registered attorney/agent having evidence such as a birth certificate, passport, driver's license, etc. showing one named inventor in the application is 65 years of age, or more.

Name of Inventor who is 65 years of age, or older

Given Name	Middle Name	Family Name	Suffix
CHRISTOPHER	S.	CROWELL	

A signature of the applicant or representative is required in accordance with 37 CFR 1.33 and 10.18.
Please see 37 CFR 1.4(d) for the format of the signature.

Select (1) or (2) :

○ (1) I am an inventor in this application and I am 65 years of age, or more.

◉ (2) I am an attorney or agent registered to practice before the Patent and Trademark Office, and I certify that I am in possession of evidence, and will retain such in the application file record, showing that the inventor listed above is 65 years of age, or more.

Signature	/Melvin I. Stoltz/	Date (YYYY-MM-DD)	2008-05-01
Name	Melvin I. Stoltz	Registration Number	25934

PTO/SB/130 (03-08)
Approved for use through 05/31/2008. OMB 0651- 0031
U.S. Patent and Trademark Office; U.S. DEPARTMENT OF COMMERCE
Under the Paperwork Reduction Act of 1995, no persons are required to respond to a collection of information unless it contains a valid OMB control number

Privacy Act Statement

The Privacy Act of 1974 (P.L. 93-579) requires that you be given certain information in connection with your submission of the attached form related to a patent application or patent. Accordingly, pursuant to the requirements of the Act, please be advised that: (1) the general authority for the collection of this information is 35 U.S.C. 2(b)(2); (2) furnishing of the information solicited is voluntary; and (3) the principal purpose for which the information is used by the U.S. Patent and Trademark Office is to process and/or examine your submission related to a patent application or patent. If you do not furnish the requested information, the U.S. Patent and Trademark Office may not be able to process and/or examine your submission, which may result in termination of proceedings or abandonment of the application or expiration of the patent.

The information provided by you in this form will be subject to the following routine uses:

1. The information on this form will be treated confidentially to the extent allowed under the Freedom of Information Act (5 U.S.C. 552) and the Privacy Act (5 U.S.C. 552a). Records from this system of records may be disclosed to the Department of Justice to determine whether the Fr eedom of Information Act requires disclosure of these records.

2. A record from this system of records may be disclosed, as a routine use, in the course of presenting evidence to a court, magistrate, or administrative tribunal, including disclosures to opposing counsel in the course of settlement negotiations.

3. A record in this system of records may be disclosed, as a routine use, to a Member of Congress submitting a request involving an individual, to whom the record pertains, when the individual has requested assistance from the Member with respect to the subject matter of the record.

4. A record in this system of records may be disclosed, as a routine use, to a contractor of the Agency having need for the information in order to perform a contract. Recipients of information shall be required to comply with the requirements of the Privacy Act of 1974, as amended, pursuant to 5 U.S.C. 552a(m).

5. A record related to an International Application filed under the Patent Cooperation Treaty in this system of records may be disclosed, as a routine use, to the International Bureau of the World Intellectual Property Organization, pursuant to the Patent Cooperation Treaty.

6. A record in this system of records may be disclosed, as a routine use, to another federal agency for purposes of National Security review (35 U.S.C. 181) and for review pursuant to the Atomic Energy Act (42 U.S.C. 218(c)).

7. A record from this system of records may be disclosed, as a routine use, to the Administrator, General Services, or his/her designee, during an inspection of records conducted by GSA as part of that agency's responsibility to recommend improvements in records management practices and programs, under authority of 44 U.S.C. 2904 and 2906. Such disclosure shall be made in accordance with the GSA regulations governing inspection of records for this purpose, and any other relevant (i.e., GSA or Commerce) directive. Such disclosure shall not be used to make determinations about indivi duals.

8. A record from this system of records may be disclosed, as a routine use, to the public after either publication of the application pursuant to 35 U.S.C. 122(b) or issuance of a patent pursuant to 35 U.S.C. 151. Further, a record may be disclosed, subject to the limitations of 37 CFR 1.14, as a routine use, to the public if the record was filed in an application which became abandoned or in which the proceedings were terminated and which application is referenced by either a published application, an application open to public inspections or an issued patent.

9. A record from this system of records may be disclosed, as a routine use, to a Federal, State, or local law enforcement agency, if the USPTO becomes aware of a violation or potential violation of law or regulation.

UNITED STATES PATENT AND TRADEMARK OFFICE

Commissioner for Patents
United States Patent and Trademark Office
P.O. Box 1450
Alexandria, VA 22313-1450
www.uspto.gov

In re Application of
Christopher S. Crowell

Application No. 11491558

Filed: July 24,2006

Attorney Docket No. 586C-078

:DECISION ON PETITION TO MAKE SPECIAL
:UNDER 37 CFR 1.102(c)(1)

This is a decision on the electronic petition under 37 CFR 1.102 (c)(1) ,filed 01-MAY-2008 to make the above-identified application special based on applicant's age as set forth in MPEP § 708.02, Section IV.

The petition is **GRANTED**.

A grantable petition to make an application special under 37 CFR 1.102(c)(1), MPEP § 708.02, Section IV: Applicant's Age must include a statement by applicant or a registered practitioner having evidence that applicant is at least 65 years of age. No fee is required.

Accordingly, the above-identified application has been accorded “special” status and will be taken up for action by the examiner upon the completion of all pre-examination processing.

Telephone inquires concerning this electronic decision should be directed to the Electronic Business Center at 866-217-9197.

All other inquires concerning either the examination or status of the application should be directed to the Technology Center.

UNITED STATES PATENT AND TRADEMARK OFFICE

UNITED STATES DEPARTMENT OF COMMERCE
United States Patent and Trademark Office
Address: COMMISSIONER FOR PATENTS
P.O. Box 1450
Alexandria, Virginia 22313-1450
www.uspto.gov

GREENBERG TRAURIG, LLP
77 WEST WACKER DRIVE
SUITE 3100
CHICAGO, IL 60601-1732

Mail Date: 04/21/2010

Applicant	: Sandro David Klein	: DECISION ON REQUEST FOR
Patent Number	: 7610555	: RECALCULATION of PATENT
Issue Date	: 10/27/2009	: TERM ADJUSTMENT IN VIEW
Appliction No	: 11/491,588	: OF WYETH AND NOTICE OF INTENT TO
Filed	: 07/24/2006	: ISSUE CERTIFICATE OF CORRECTION
		:

The Request for Recalculation is **GRANTED** to the extent indicated.

The patent term adjustment has been determined to be **411** days. The USPTO will *sua sponte* issue a certificate of correction reflecting the amount of PTA days determined by the recalculation.

Prior to the issuance of the certificate of correction, the USPTO will afford patentee an opportunity to be heard and request reconsideration. Accordingly, patentee has **one month or thirty (30) days**, whichever is longer, to file a request for reconsideration of this patent term adjustment calculation. See 35 U.S.C. 154(b)(3)(B)(ii) and 37 CFR 1.322(a)(4). No extensions of time will be granted under 37 CFR 1.136.

Patentee should use document code PET.OP if electronically filing a request for reconsideration of this patent term adjustment calculation. The patentee must also include the information required by 37 CFR 1.705(b)(2) and the fee required by 37 CFR 1.18(e). If patentee does not file a timely request for reconsideration of this patent term adjustment calculation including the information required by 37 CFR 1.705(b)(2) and the fee required by 37 CFR 1.18(e), the USPTO will issue a certificate of correction reflecting the PTA determination noted above.

Patentee should be aware that in order to preserve the right to review in the United States District Court for the District of Columbia of the USPTO patent term adjustment determination, patentee must ensure that he or she also take the steps required under 35 U.S.C. 154(b)(4)(A) in a timely manner. Nothing in the request for recalculation should be construed as providing an alternative time frame for commencing a civil action under 35 U.S.C. 154(b)(4)(A).

Any questions concerning this decision should be directed to the Office of Patent Legal Administration at 571-272-7702.

UNITED STATES PATENT AND TRADEMARK OFFICE

Commissioner for Patents
United States Patent and Trademark Office
P.O. Box 1450
Alexandria, VA 22313-1450
www.uspto.gov

ANDREA L. ROBIDOUX
TWO INTERNATIONAL PLACE
BOSTON, MA 02110

COPY MAILED

JAN 15 2010

In re Application of	:	
Megati et al.	:	DECISION ON PETITION
Application No. 11/491,590	:	TO WITHDRAW
Filed: July 24, 2006	:	FROM RECORD
Attorney Docket No. AM102000	:	

This is a decision on the Request to Withdraw as attorney or agent of record under 37 C.F.R. § 1.36(b) filed November 20, 2009, which is being treated as a request to withdraw from employment in a proceeding before the Office under 37 C.F.R. § 10.40.

The request is **DISMISSED**.

A review of the file record indicates that Andrea L. Robidoux does not have power of attorney in this patent application. Accordingly, the request to withdraw under 37 C.F.R. § 1.36(b) is not applicable.

The request to change the correspondence address of record is not accepted in view of Andrea L. Robidoux not having power of attorney. See MPEP §§ 601.03 and 405.

Currently, there is no outstanding Office action that requires a reply.

Telephone inquires concerning this decision should be directed to the undersigned at 571-272-7751.

Joan Olszewski
Petitions Examiner
Office of Petitions

UNITED STATES PATENT AND TRADEMARK OFFICE

Commissioner for Patents
United States Patent and Trademark Office
P.O. Box 1450
Alexandria, VA 22313-1450
www.uspto.gov

COPY MAILED

AUG 0 3 2009

OFFICE OF PETITIONS

SALIWANCHIK LLOYD & SALIWANCHIK
A PROFESSIONAL ASSOCIATION
PO Box 142950
GAINESVILLE FL 32614

In re Application of :
Haskell-Luevano :
Application No. 11/491,596 :
Filed: July 24, 2006 :
Attorney Docket No. UF-375D1 :

ON APPLICATION FOR
PATENT TERM ADJUSTMENT

This is in response to the "COMMUNICATION REGARDING CORRECTION OF PATENT", filed December 12, 2008. Applicant requests that the determination of patent term adjustment under 35 U.S.C. § 154(b) be reviewed for accuracy. This petition is properly treated under 37 CFR 1.705(b).

The request for review of the patent term adjustment is **GRANTED**.

The Office has updated the PAIR screen to reflect that the correct Patent Term Adjustment (PTA) determination at the time of the mailing of the Notice of Allowance is zero **(0)** days. A copy of the updated PAIR screen, showing the correct determination, is enclosed.

On December 11, 2008, the Office mailed the Determination of Patent Term Adjustment under 35 U.S.C. 154(b) in the above-identified application. The Notice stated that the patent term adjustment to date is (53) days.

Applicant questions whether a reduction of 114 days is required for the "Submission of Sequence Listing Under 37 CFR §§1.821-1.825" filed on July 3, 2008 in response to the June 3, 2008 Notice to Comply.

A review of the application history confirms a period of reduction of 114 days should have been entered based on 37 CFR 1.704(c)(7). 37 CFR §1.704(c)(7) establishes submission of a reply having an omission (1.135(c)) as a circumstance that constitutes a failure of an applicant to engage in reasonable efforts to conclude processing or examination of an application.

1.704(c)(7) also provides that in such a case the period of adjustment set forth in 1.703 shall be reduced by the number of days, if any, beginning on the date the reply having an omission was filed and ending on the date that the reply or other paper correcting the omission was filed. The reference to "1.135(c)" is parenthetical because 1.704(c)(7) is not limited to Office actions under 1.135(c) but applies when the Office issues any action or notice indicating that a reply has an omission which must be corrected: e.g., (1) a decision on a petition under 1.47 dismissing the petition as lacking an item necessary to grant the petition; or (2) a notice indicating that the computer readable format sequence listing filed in reply to a Notice to Comply with Requirements for Patent Applications Containing Nucleotide Sequence and/or Amino Acid Sequence Disclosures (PTO-1661) does not comply with 1.821. Accordingly, pursuant to 1.704(c)(7), a period of reduction of 114 days, counting the number of days beginning on the day after the date the reply having an omission was filed, March 11, 2008 and ending on the date that the reply correcting the omission was filed, July 3, 2008, should have been entered.

In view thereof, the correct determination of PTA at the time of the mailing of the notice of allowance is zero **(0)** days.

As this letter was submitted as an advisement to the Office of an error against applicants' favor, the Office will not assess the $200.00 fee under 37 CFR 1.18(e). The Office thanks applicants for their good faith and candor in bringing this to the attention of the Office.

The application is being forwarded to the Office of Data Management for issuance of a patent. The patent term adjustment indicated on the patent (as shown on the Issue Notification mailed about three weeks prior to patent issuance) will include any additional adjustment accrued both for Office delay in issuing the patent more than four months after payment of the issue fee and satisfaction of all outstanding requirements, and for the Office taking in excess of three years to issue the patent (to the extent that the three-year period does not overlap with periods already accorded).

Telephone inquiries specific to this matter should be directed to the Petitions Attorney Charlema Grant at (571) 272-3215.

Kery A Fries

Kery Fries
Senior Legal Advisor Attorney
Office of Patent Legal Administration

Enclosure: Copy of REVISED PALM Screen

PALM INTRANET

Day : Sunday
Date: 8/2/2009
Time: 12:08:56

PTA Calculations for Application: 11/491596			
Application Filing Date:	07/24/2006	PTO Delay (PTO):	53
Issue Date of Patent:		Three Years:	0
Pre-Issue Petitions:	0	Applicant Delay (APPL):	0
Post-Issue Petitions:	0	Total PTA (days):	0
PTO Delay Adjustment:	-114		

File Contents History

Number	Date	Contents Description	PTO	APPL	START
51	08/02/2009	ADJUSTMENT OF PTA CALCULATION BY PTO		114	
43	12/04/2008	MAIL NOTICE OF ALLOWANCE	31		33
42	11/14/2008	ISSUE REVISION COMPLETED			
41	11/14/2008	NOTICE OF ALLOWANCE DATA VERIFICATION COMPLETED			
40	11/14/2008	CASE DOCKETED TO EXAMINER IN GAU			
39	11/14/2008	DOCUMENT VERIFICATION			
38	11/10/2008	EXAMINER'S AMENDMENT COMMUNICATION			
37	11/10/2008	NOTICE OF ALLOWABILITY			
36	11/04/2008	EXAMINER INTERVIEW SUMMARY RECORD (PTOL - 413)			
34	08/28/2008	DATE FORWARDED TO EXAMINER			
33	07/03/2008	RESPONSE AFTER NON-FINAL ACTION			
32	08/08/2008	CRF IS FLAWED TECHNICALLY / NOT ENTERED INTO DATABASE			
31	07/03/2008	CRF DISK HAS BEEN RECEIVED BY PREEXAM / GROUP / PCT			
30	06/03/2008	MAIL MISCELLANEOUS COMMUNICATION TO APPLICANT			
29	06/02/2008	MISCELLANEOUS ACTION WITH SSP			
28	04/11/2008	DATE FORWARDED TO EXAMINER			
27	03/11/2008	RESPONSE AFTER NON-FINAL ACTION			
26	03/24/2008	CRF IS FLAWED TECHNICALLY / NOT ENTERED INTO DATABASE			
25	12/11/2007	MAIL NON-FINAL REJECTION			
24	12/10/2007	NON-FINAL REJECTION			
23	10/16/2006	INFORMATION DISCLOSURE STATEMENT CONSIDERED			

20	11/27/2007	DATE FORWARDED TO EXAMINER			
19	11/16/2007	RESPONSE TO ELECTION / RESTRICTION FILED			
18	10/16/2007	MAIL RESTRICTION REQUIREMENT	22		-1
17	10/15/2007	REQUIREMENT FOR RESTRICTION / ELECTION			
16	07/19/2007	IFW TSS PROCESSING BY TECH CENTER COMPLETE			
15	10/16/2006	REFERENCE CAPTURE ON IDS			
14.7	10/16/2006	INFORMATION DISCLOSURE STATEMENT (IDS) FILED			
14	10/16/2006	INFORMATION DISCLOSURE STATEMENT (IDS) FILED			
13	09/25/2006	CASE DOCKETED TO EXAMINER IN GAU			
12	08/04/2006	APPLICATION RETURN FROM OIPE			
11	08/04/2006	APPLICATION IS NOW COMPLETE			
10	08/04/2006	APPLICATION RETURN TO OIPE			
9	08/04/2006	APPLICATION DISPATCHED FROM OIPE			
8	08/04/2006	APPLICATION IS NOW COMPLETE			
7	07/24/2006	CRF DISK HAS BEEN RECEIVED BY PREEXAM / GROUP / PCT			
6	08/03/2006	CLEARED BY L&R (LARS)			
5	08/01/2006	REFERRED TO LEVEL 2 (LARS) BY OIPE CSR			
4	08/01/2006	CASE CLASSIFIED BY OIPE			
3	07/28/2006	CRF IS GOOD TECHNICALLY / ENTERED INTO DATABASE			
2	07/28/2006	IFW SCAN & PACR AUTO SECURITY REVIEW			
1	07/24/2006	INITIAL EXAM TEAM NN			

Search Another: Application# [ ] Search

EXPLANATION OF PTA CALCULATION

EXPLANATION OF PTE CALCULATION

To go back, right click here and select Back. To go forward, right click here and select Forward. To refresh, right click here and select Refresh.

Back to OASIS | Home page

UNITED STATES PATENT AND TRADEMARK OFFICE

Commissioner for Patents
United States Patent and Trademark Office
P.O. Box 1450
Alexandria, VA 22313-1450
www.uspto.gov

MCANDREWS HELD & MALLOY, LTD
500 WEST MADISON STREET
SUITE 3400
CHICAGO IL 60661

MAILED

JUL 23 2010

OFFICE OF PETITIONS

In re Application of :
Schoner :
Application No. 11/491,599 : ON APPLICATION FOR
Filed: July 24, 2006 : PATENT TERM ADJUSTMENT
Atty Docket No. 17276US01 :

This is in response to the APPLICATION FOR RECONSIDERATION OF THE DETERMINATION OF PATENT TERM ADJUSTMENT UNDER 35 U.S.C. 154(b) ACCOMPANYING THE NOTICE OF ALLOWANCE (37 CFR 1.705), filed June 30, 2010. Applicant submits that the correct patent term adjustment to be indicated on the patent is one thousand seventy-five (1075) days[1], not six hundred ninety-two (692) days as calculated by the Office as of the mailing of the initial determination of patent term adjustment. Applicant requests this correction solely on the basis that the Office will take in excess of three years to issue this patent.

As the instant application for patent term adjustment requests reconsideration of the patent term adjustment as it relates to the Office's failure to issue the patent within 3 years of the filing date, the application for patent term adjustment under 37 CFR 1.705(b) is **DISMISSED as PREMATURE**.

Knowledge of the actual date the patent issues is required to calculate the amount, if any, of additional patent term patentee is entitled to for Office failure to issue the patent within 3 years. See § 1.702(b). The computer will not undertake the § 1.702(b) calculation until the actual date of issuance of the patent has been determined. Likewise, the computer will not calculate any further Office delay under § 1.702(a)(4) or applicant delay under § 1.704(c)(10) until the actual date of issuance of the patent has been determined. As such, the Office can not make a determination on the correctness of the patent term adjustment until the patent has issued.

[1] This calculation is based on a projected issuance date of October 5, 2010.

Requesting reconsideration of the patent term adjustment to be indicated on the patent under 37 CFR 1.705(b) based on the initial determination of patent term adjustment and a projected issuance date of the patent is premature. Accordingly, it is appropriate to dismiss as premature such a request.

Rather than file an application for patent term adjustment under 37 CFR 1.705(b) contesting the 37 CFR 1.702(b) calculation at the time of the mailing of the notice of allowance, applicant is advised that he may wait until the time of the issuance of the patent and file a request for reconsideration of the patent term adjustment pursuant to 37 CFR 1.705(d). As the USPTO does not calculate the amount of time earned pursuant to 37 CFR 1.702(b) until the time of the issuance of the patent, the Office will consider any request for reconsideration of the patent term adjustment due to an error in the calculation of 37 CFR 1.702(b) to be timely if the request for reconsideration is filed within two months of the issuance of the patent. However, as to all other bases for contesting the initial determination of patent term adjustment received with the notice of allowance, applicant must timely file an application for patent term adjustment prior to the payment of the issue fee[2].

The Office acknowledges submission of the $200.00 fee set forth in 37 CFR 1.18(e) for consideration of the application for patent term adjustment under 37 CFR 1.705(b).

Any request for reconsideration of the patent term adjustment indicated on the patent must be timely filed within 2 months after issuance pursuant to 37 CFR 1.705(d) and must include payment of the required fee under 37 CFR 1.18(e).

The Office of Data Management has been advised of this decision. This application is being referred to the Office of Data Management for issuance of the patent.

---

[2] For example, if applicant disputes both the calculation of patent term adjustment under 37 CFR 1.702(a)(1) for Office failure to mail a first Office action or notice of allowance not later than fourteen months after the date on which the application was filed and under 37 CFR 1.702(b) for Office failure to issue a patent within three years of the actual filing date of the application, then applicant must still timely file an application for patent term adjustment prior to the payment of the issue fee to contest the calculation of Office delay in issuing a first Office action or notice of allowance. See 37 CFR 1.705(b) and 35 U.S.C. 154(b)(3)(B). A dispute as to the calculation of the §1.702(a)(1) period raised on request for reconsideration of patent term adjustment under 37 CFR 1.705(d) will be dismissed as untimely filed.

Telephone inquiries specific to this decision should be directed to the undersigned at (571) 272-3230.

Shirene Willis Brantley

Shirene Willis Brantley
Senior Petitions Attorney
Office of Petitions

UNITED STATES PATENT AND TRADEMARK OFFICE

UNITED STATES DEPARTMENT OF COMMERCE
United States Patent and Trademark Office
Address: COMMISSIONER FOR PATENTS
P.O. Box 1450
Alexandria, Virginia 22313-1450
www.uspto.gov

INDIANAPOLIS OFFICE 27879
BRINKS HOFER GILSON & LIONE
CAPITAL CENTER, SUITE 1100
201 NORTH ILLINOIS STREET
INDIANAPOLIS, IN 46204-4220

Mail Date: 04/21/2010

Applicant	: Siegfried Schwert	: DECISION ON REQUEST FOR
Patent Number	: 7641756	: RECALCULATION of PATENT
Issue Date	: 01/05/2010	: TERM ADJUSTMENT IN VIEW
Appliction No	: 11/491,615	: OF WYETH AND NOTICE OF INTENT TO
Filed	: 07/24/2006	: ISSUE CERTIFICATE OF CORRECTION
		:

The Request for Recalculation is **GRANTED** to the extent indicated.

The patent term adjustment has been determined to be **467** days. The USPTO will *sua sponte* issue a certificate of correction reflecting the amount of PTA days determined by the recalculation.

Prior to the issuance of the certificate of correction, the USPTO will afford patentee an opportunity to be heard and request reconsideration. Accordingly, patentee has **one month or thirty (30) days**, whichever is longer, to file a request for reconsideration of this patent term adjustment calculation. See 35 U.S.C. 154(b)(3)(B)(ii) and 37 CFR 1.322(a)(4). No extensions of time will be granted under 37 CFR 1.136.

Patentee should use document code PET.OP if electronically filing a request for reconsideration of this patent term adjustment calculation. The patentee must also include the information required by 37 CFR 1.705(b)(2) and the fee required by 37 CFR 1.18(e). If patentee does not file a timely request for reconsideration of this patent term adjustment calculation including the information required by 37 CFR 1.705(b)(2) and the fee required by 37 CFR 1.18(e), the USPTO will issue a certificate of correction reflecting the PTA determination noted above.

Patentee should be aware that in order to preserve the right to review in the United States District Court for the District of Columbia of the USPTO patent term adjustment determination, patentee must ensure that he or she also take the steps required under 35 U.S.C. 154(b)(4)(A) in a timely manner. Nothing in the request for recalculation should be construed as providing an alternative time frame for commencing a civil action under 35 U.S.C. 154(b)(4)(A).

Any questions concerning this decision should be directed to the Office of Patent Legal Administration at 571-272-7702.

UNITED STATES PATENT AND TRADEMARK OFFICE

UNITED STATES DEPARTMENT OF COMMERCE
United States Patent and Trademark Office
Address: COMMISSIONER FOR PATENTS
P.O. Box 1450
Alexandria, Virginia 22313-1450
www.uspto.gov

Knobbe, Martens, Olson & Bear LLP
2040 Main Street
14th Floor
Irvine, CA 92614

Mail Date: 04/21/2010

Applicant	: Nyles W. Cody	: DECISION ON REQUEST FOR
Patent Number	: 7608526	: RECALCULATION of PATENT
Issue Date	: 10/27/2009	: TERM ADJUSTMENT IN VIEW
Appliction No	: 11/491,616	: OF WYETH AND NOTICE OF INTENT TO
Filed	: 07/24/2006	: ISSUE CERTIFICATE OF CORRECTION
		:

The Request for Recalculation is **GRANTED** to the extent indicated.

The patent term adjustment has been determined to be **599** days. The USPTO will *sua sponte* issue a certificate of correction reflecting the amount of PTA days determined by the recalculation.

Prior to the issuance of the certificate of correction, the USPTO will afford patentee an opportunity to be heard and request reconsideration. Accordingly, patentee has **one month or thirty (30) days**, whichever is longer, to file a request for reconsideration of this patent term adjustment calculation. See 35 U.S.C. 154(b)(3)(B)(ii) and 37 CFR 1.322(a)(4). No extensions of time will be granted under 37 CFR 1.136.

Patentee should use document code PET.OP if electronically filing a request for reconsideration of this patent term adjustment calculation. The patentee must also include the information required by 37 CFR 1.705(b)(2) and the fee required by 37 CFR 1.18(e). If patentee does not file a timely request for reconsideration of this patent term adjustment calculation including the information required by 37 CFR 1.705(b)(2) and the fee required by 37 CFR 1.18(e), the USPTO will issue a certificate of correction reflecting the PTA determination noted above.

Patentee should be aware that in order to preserve the right to review in the United States District Court for the District of Columbia of the USPTO patent term adjustment determination, patentee must ensure that he or she also take the steps required under 35 U.S.C. 154(b)(4)(A) in a timely manner. Nothing in the request for recalculation should be construed as providing an alternative time frame for commencing a civil action under 35 U.S.C. 154(b)(4)(A).

Any questions concerning this decision should be directed to the Office of Patent Legal Administration at 571-272-7702.

UNITED STATES PATENT AND TRADEMARK OFFICE

UNITED STATES DEPARTMENT OF COMMERCE
United States Patent and Trademark Office
Address: COMMISSIONER FOR PATENTS
P.O. Box 1450
Alexandria, Virginia 22313-1450
www.uspto.gov

ALCON
IP LEGAL, TB4-8
6201 SOUTH FREEWAY
FORT WORTH, TX 76134

Mail Date: 04/21/2010

Applicant	: Mark A. Hopkins	: DECISION ON REQUEST FOR
Patent Number	: 7594901	: RECALCULATION of PATENT
Issue Date	: 09/29/2009	: TERM ADJUSTMENT IN VIEW
Appliction No	: 11/491,630	: OF WYETH AND NOTICE OF INTENT TO
Filed	: 07/24/2006	: ISSUE CERTIFICATE OF CORRECTION
		:

The Request for Recalculation is **GRANTED** to the extent indicated.

The patent term adjustment has been determined to be **175** days. The USPTO will *sua sponte* issue a certificate of correction reflecting the amount of PTA days determined by the recalculation.

Prior to the issuance of the certificate of correction, the USPTO will afford patentee an opportunity to be heard and request reconsideration. Accordingly, patentee has **one month or thirty (30) days**, whichever is longer, to file a request for reconsideration of this patent term adjustment calculation. See 35 U.S.C. 154(b)(3)(B)(ii) and 37 CFR 1.322(a)(4). No extensions of time will be granted under 37 CFR 1.136.

Patentee should use document code PET.OP if electronically filing a request for reconsideration of this patent term adjustment calculation. The patentee must also include the information required by 37 CFR 1.705(b)(2) and the fee required by 37 CFR 1.18(e). If patentee does not file a timely request for reconsideration of this patent term adjustment calculation including the information required by 37 CFR 1.705(b)(2) and the fee required by 37 CFR 1.18(e), the USPTO will issue a certificate of correction reflecting the PTA determination noted above.

Patentee should be aware that in order to preserve the right to review in the United States District Court for the District of Columbia of the USPTO patent term adjustment determination, patentee must ensure that he or she also take the steps required under 35 U.S.C. 154(b)(4)(A) in a timely manner. Nothing in the request for recalculation should be construed as providing an alternative time frame for commencing a civil action under 35 U.S.C. 154(b)(4)(A).

Any questions concerning this decision should be directed to the Office of Patent Legal Administration at 571-272-7702.

UNITED STATES PATENT AND TRADEMARK OFFICE

UNITED STATES DEPARTMENT OF COMMERCE
United States Patent and Trademark Office
Address: COMMISSIONER FOR PATENTS
P.O. Box 1450
Alexandria, Virginia 22313-1450
www.uspto.gov

SCHWEGMAN, LUNDBERG & WOESSNER, P.A.
P.O. BOX 2938
MINNEAPOLIS, MN 55402

Mail Date: 04/27/2010

Applicant	: Jeffery W. Janzen	: DECISION ON REQUEST FOR
Patent Number	: 7610524	: RECALCULATION of PATENT
Issue Date	: 10/27/2009	: TERM ADJUSTMENT IN VIEW
Application No	: 11/491,640	: OF WYETH AND NOTICE OF INTENT TO
Filed	: 07/24/2006	: ISSUE CERTIFICATE OF CORRECTION
		:

The Request for Recalculation is **GRANTED** to the extent indicated.

The patent term adjustment has been determined to be **111** days. The USPTO will *sua sponte* issue a certificate of correction reflecting the amount of PTA days determined by the recalculation.

Prior to the issuance of the certificate of correction, the USPTO will afford patentee an opportunity to be heard and request reconsideration. Accordingly, patentee has **one month or thirty (30) days**, whichever is longer, to file a request for reconsideration of this patent term adjustment calculation. See 35 U.S.C. 154(b)(3)(B)(ii) and 37 CFR 1.322(a)(4). No extensions of time will be granted under 37 CFR 1.136.

Patentee should use document code PET.OP if electronically filing a request for reconsideration of this patent term adjustment calculation. The patentee must also include the information required by 37 CFR 1.705(b)(2) and the fee required by 37 CFR 1.18(e). If patentee does not file a timely request for reconsideration of this patent term adjustment calculation including the information required by 37 CFR 1.705(b)(2) and the fee required by 37 CFR 1.18(e), the USPTO will issue a certificate of correction reflecting the PTA determination noted above.

Patentee should be aware that in order to preserve the right to review in the United States District Court for the District of Columbia of the USPTO patent term adjustment determination, patentee must ensure that he or she also take the steps required under 35 U.S.C. 154(b)(4)(A) in a timely manner. Nothing in the request for recalculation should be construed as providing an alternative time frame for commencing a civil action under 35 U.S.C. 154(b)(4)(A).

Any questions concerning this decision should be directed to the Office of Patent Legal Administration at 571-272-7702.

UNITED STATES PATENT AND TRADEMARK OFFICE

Commissioner for Patents
United States Patent and Trademark Office
P.O. Box 1450
Alexandria, VA 22313-1450
www.uspto.gov

VOULA HALOULOS
3-1668 EGLINTON AVENUE WEST
TORONTO ON M6E 2H2 CA CANADA

COPY MAILED

MAR 19 2008

OFFICE OF PETITIONS

In re Application of :
Peter Haloulos et al :
Application No. 11/491,653 : ON PETITION
Filed: July 24, 2006 :
Attorney Docket No. :

This is a decision on the petition under 37 CFR 1.137(b), filed October 26, 2007, to revive the above-identified application.

The petition is **DISMISSED.**

Any request for reconsideration of this decision must be submitted within TWO (2) MONTHS from the mail date of this decision. Extensions of time under 37 CFR 1.136(a) are permitted. The reconsideration request should include a cover letter entitled "**Renewed Petition under 37 CFR 1.137(b)**." This is **not** final agency action within the meaning of 5 U.S.C. § 704.

The above-identified application became abandoned for failure to reply in a timely manner to the Notice to File Missing Parts of Application (Notice) mailed August 15, 2006. The Notice set a period for reply of two (2) months from the mail date of the Notice. No extensions of time under the provisions of 37 CFR 1.136(a) were obtained. Accordingly, the above-identified application became abandoned on October 16, 2006.

A grantable petition under 37 CFR 1.137(b) must be accompanied by: (1) the required reply, unless previously filed; (2) the petition fee as set forth in 37 CFR 1.17(m); (3) a statement that the entire delay in filing the required reply from the due date for the reply until the filing of a grantable petition pursuant to 37 CFR 1.137(b) was unintentional; and (4) any terminal disclaimer (and fee as set forth in 37 CFR 1.20(d)) required by 37 CFR 1.137(c). Where there is a question as to whether either the abandonment or the delay in filing a petition under 37 CFR 1.137 was unintentional, the Commissioner may require additional information. See MPEP 711.03(c)(III)(C) and (D). The instant petition lack(s) item(s) (1).

The petition received October 26, 2007 was sign by one (1) applicant, Voula Haloulos. All communications received at the USPTO must be sign by all of the applicants. 37 CFR 1.33(b) states:

> "Amendments and other papers filed in the application must be signed by: (1) An attorney or agent of record appointed in compliance with § 1.34(b); (2) A registered attorney or agent not of record who acts in a representative capacity under the provisions of § 1.34(a); (3) The assignee of record of the entire interest, if there is an assignee of record of the entire interest; (4) An assignee of record of an undivided part interest, and any assignee(s) of the remaining interest and any applicant retaining an interest, if there is an assignee of record of an undivided part interest; or (5) All of the applicants (§§ 1.42. 1.43 and 1.47) for patent, unless there is an assignee of record of the entire interest and such assignee has taken action in the application in accordance with §§ 3.71 and 3.73."

Further correspondence with respect to this matter should be addressed as follows:

By mail:	Mail Stop PETITIONS Commissioner for Patents Post Office Box 1450 Alexandria, VA 22313-1450
By hand:	Customer Service Window Randolph Building 401 Dulany Street Alexandria, VA 22314
By facsimile:	(571) 273-8300 ATTN: Office of Petitions

Telephone inquiries concerning this decision should be directed to the undersigned at (571) 272-3210.

Irvin Dingle
Petitions Examiner
Office of Petitions

UNITED STATES PATENT AND TRADEMARK OFFICE

Commissioner for Patents
United States Patent and Trademark Office
P.O. Box 1450
Alexandria, VA 22313-1450
www.uspto.gov

COPY MAILED

JUL 16 2008

OFFICE OF PETITIONS

VOULA HALOULOS
3-1668 EGLINTON AVENUE WEST
TORONTO ON M6E 2H2 CA CANADA

In re Application of :
Peter Haloulos et al :
Application No. 11/491,653 : ON PETITION
Filed: July 24, 2006 :
Attorney Docket No. :

This is a decision on the renewed petition under 37 CFR 1.137(b), filed April 7, 2008, to revive the above-identified application.

The petition is **GRANTED**.

Telephone inquiries concerning this decision should be directed to Irvin Dingle at (571) 272-3210.

This matter is being referred to Technology Center AU 3732 for further processing.

Irvin Dingle
Petitions Examiner
Office of Petitions

UNITED STATES PATENT AND TRADEMARK OFFICE

Commissioner for Patents
United States Patent and Trademark Office
P. O. Box 1450
Alexandria, VA 22313-1450
www. uspto. gov

COPY MAILED

MAR 3 0 2009

OFFICE OF PETITIONS

VOULA HALOULOS
3-1668 EGLINTON AVENUE WEST
TORONTO ON M6E 2H2 CA CANADA

In re Application of :
Peter Haloulos et al :
Application No. 11/491,653 : ON PETITION
Filed: July 24, 2006 :
Attorney Docket No. :

CORRECTED DECISION

This is a decision on the renewed petition under 37 CFR 1.137(b), filed April 7, 2008, to revive the above-identified application.

The petition is **GRANTED**.

The decision mailed July 16, 2008 is hereby vacated as of the mail date of this decision.

Telephone inquiries concerning this decision should be directed to Irvin Dingle at (571) 272-3210.

This matter is being referred to the Office of Patent Application Processing.

Irvin Dingle
Petitions Examiner
Office of Petitions

UNITED STATES PATENT AND TRADEMARK OFFICE

UNITED STATES DEPARTMENT OF COMMERCE
United States Patent and Trademark Office
Address: COMMISSIONER FOR PATENTS
P.O. Box 1450
Alexandria, Virginia 22313-1450
www.uspto.gov

PCE INDUSTRY, INC.
ATT. Steven Reiss
288 SOUTH MAYO AVENUE
CITY OF INDUSTRY, CA 91789

Mail Date: 04/21/2010

Applicant	: Cheng-fang Hsiao	: DECISION ON REQUEST FOR
Patent Number	: 7593630	: RECALCULATION of PATENT
Issue Date	: 09/22/2009	: TERM ADJUSTMENT IN VIEW
Appliction No	: 11/491,660	: OF WYETH AND NOTICE OF INTENT TO
Filed	: 07/24/2006	: ISSUE CERTIFICATE OF CORRECTION
		:

The Request for Recalculation is **GRANTED** to the extent indicated.

The patent term adjustment has been determined to be **529** days. The USPTO will *sua sponte* issue a certificate of correction reflecting the amount of PTA days determined by the recalculation.

Prior to the issuance of the certificate of correction, the USPTO will afford patentee an opportunity to be heard and request reconsideration. Accordingly, patentee has **one month or thirty (30) days**, whichever is longer, to file a request for reconsideration of this patent term adjustment calculation. See 35 U.S.C. 154(b)(3)(B)(ii) and 37 CFR 1.322(a)(4). No extensions of time will be granted under 37 CFR 1.136.

Patentee should use document code PET.OP if electronically filing a request for reconsideration of this patent term adjustment calculation. The patentee must also include the information required by 37 CFR 1.705(b)(2) and the fee required by 37 CFR 1.18(e). If patentee does not file a timely request for reconsideration of this patent term adjustment calculation including the information required by 37 CFR 1.705(b)(2) and the fee required by 37 CFR 1.18(e), the USPTO will issue a certificate of correction reflecting the PTA determination noted above.

Patentee should be aware that in order to preserve the right to review in the United States District Court for the District of Columbia of the USPTO patent term adjustment determination, patentee must ensure that he or she also take the steps required under 35 U.S.C. 154(b)(4)(A) in a timely manner. Nothing in the request for recalculation should be construed as providing an alternative time frame for commencing a civil action under 35 U.S.C. 154(b)(4)(A).

Any questions concerning this decision should be directed to the Office of Patent Legal Administration at 571-272-7702.

UNITED STATES PATENT AND TRADEMARK OFFICE

UNITED STATES DEPARTMENT OF COMMERCE
United States Patent and Trademark Office
Address: COMMISSIONER FOR PATENTS
P.O. Box 1450
Alexandria, Virginia 22313-1450
www.uspto.gov

APPLICATION NO.	FILING DATE	FIRST NAMED INVENTOR	ATTORNEY DOCKET NO.	CONFIRMATION NO.
11/491,677	07/24/2006	Raj Narayan Marndi	200404631-2	6271

7590 04/14/2008

HEWLETT PACKARD COMPANY
P O BOX 272400, 3404 E. HARMONY ROAD
INTELLECTUAL PROPERTY ADMINISTRATION
FORT COLLINS, CO 80527-2400

EXAMINER	
GAFFIN, JEFFREY A	

ART UNIT	PAPER NUMBER
2165	

NOTIFICATION DATE	DELIVERY MODE
04/14/2008	ELECTRONIC

DECISION GRANTING PETITION UNDER 37 CFR 1.138(d)

The declaration of express abandonment is recognized

This is in response to the petition under 37 CFR 1.138(d), requesting for a refund of any previously paid search fee and excess claims fee in the above-identified application.

The petition is granted.

The express abandonment is recognized. Any previously paid search fee and excess claims fee are hereby refunded.

Telephone inquiries should be directed to the Office of Data Management at (571) 272-4200.

Tom Farmer

Patent Publication Branch
Office of Data Management

Adjustment date: 04/15/2008 DTERRY 11491677
02/27/2006 CNGUYEN2 00000005 082025
02 FC:1111 500.00 CR

UNITED STATES PATENT AND TRADEMARK OFFICE

UNITED STATES DEPARTMENT OF COMMERCE
United States Patent and Trademark Office
Address: COMMISSIONER FOR PATENTS
P.O. Box 1450
Alexandria, Virginia 22313-1450
www.uspto.gov

ANDRUS, SCEALES, STARKE & SAWALL, LLP
100 EAST WISCONSIN AVENUE, SUITE 1100
MILWAUKEE, WI 53202

Mail Date: 04/21/2010

Applicant	: Uwe Hohne	: DECISION ON REQUEST FOR
Patent Number	: 7644820	: RECALCULATION of PATENT
Issue Date	: 01/12/2010	: TERM ADJUSTMENT IN VIEW
Appliction No	: 11/491,679	: OF WYETH AND NOTICE OF INTENT TO
Filed	: 07/24/2006	: ISSUE CERTIFICATE OF CORRECTION
		:

The Request for Recalculation is **GRANTED** to the extent indicated.

The patent term adjustment has been determined to be **544** days. The USPTO will *sua sponte* issue a certificate of correction reflecting the amount of PTA days determined by the recalculation.

Prior to the issuance of the certificate of correction, the USPTO will afford patentee an opportunity to be heard and request reconsideration. Accordingly, patentee has **one month or thirty (30) days**, whichever is longer, to file a request for reconsideration of this patent term adjustment calculation. See 35 U.S.C. 154(b)(3)(B)(ii) and 37 CFR 1.322(a)(4). No extensions of time will be granted under 37 CFR 1.136.

Patentee should use document code PET.OP if electronically filing a request for reconsideration of this patent term adjustment calculation. The patentee must also include the information required by 37 CFR 1.705(b)(2) and the fee required by 37 CFR 1.18(e). If patentee does not file a timely request for reconsideration of this patent term adjustment calculation including the information required by 37 CFR 1.705(b)(2) and the fee required by 37 CFR 1.18(e), the USPTO will issue a certificate of correction reflecting the PTA determination noted above.

Patentee should be aware that in order to preserve the right to review in the United States District Court for the District of Columbia of the USPTO patent term adjustment determination, patentee must ensure that he or she also take the steps required under 35 U.S.C. 154(b)(4)(A) in a timely manner. Nothing in the request for recalculation should be construed as providing an alternative time frame for commencing a civil action under 35 U.S.C. 154(b)(4)(A).

Any questions concerning this decision should be directed to the Office of Patent Legal Administration at 571-272-7702.

UNITED STATES PATENT AND TRADEMARK OFFICE

Commissioner for Patents
United States Patent and Trademark Office
P.O. Box 1450
Alexandria, VA 22313-1450
www.uspto.gov

SCHWEGMAN, LUNDBERG
& WOESSNER/MICRON
P.O. BOX 2938
MINNEAPOLIS, MN 55402

COPY MAILED

JAN 23 2008

OFFICE OF PETITIONS

In re Application of :
Scott E. MOORE :
Application No. 11/491,736 : DECISION ON PETITION
Filed: July 24, 2004 : TO WITHDRAW
Attorney Docket No. 076838-150106/US : FROM RECORD
:

This is a decision on the Request to Withdraw as attorney or agent of record under 37 C.F.R. § 1.36(b), filed December 5, 2007.

The request is **DISMISSED** as moot.

A review of the file record indicates that the power of attorney to Schwegman, Lundberg & Woessner/Micron, has been revoked by the assignee of the patent application on January 9, 2008. Accordingly, the request to withdraw under 37 C.F.R. § 1.36(b) is moot.

The correspondence address of record has been changed and the new correspondence address is the address indicated below.

Telephone inquires concerning this decision should be directed to undersigned at 571-272- 6735.

Diane Goodwyn
Petitions Examiner
Office of Petitions

cc: VICTOR SANTOS
GREENBERG TRAURIG, LLP
2450 COLORADO AVENUE,
SUITE 400E
SANTA MONICA, CA 90404

UNITED STATES PATENT AND TRADEMARK OFFICE

UNITED STATES DEPARTMENT OF COMMERCE
United States Patent and Trademark Office
Address: COMMISSIONER FOR PATENTS
P.O. Box 1450
Alexandria, Virginia 22313-1450
www.uspto.gov

STRAUB & POKOTYLO
788 Shrewsbury Avenue
TINTON FALLS, NJ 07724

Mail Date: 04/21/2010

Applicant	: Hideo Shirako	: DECISION ON REQUEST FOR
Patent Number	: 7616880	: RECALCULATION of PATENT
Issue Date	: 11/10/2009	: TERM ADJUSTMENT IN VIEW
Appliction No	: 11/491,760	: OF WYETH AND NOTICE OF INTENT TO
Filed	: 07/24/2006	: ISSUE CERTIFICATE OF CORRECTION
		:

The Request for Recalculation is **GRANTED** to the extent indicated.

The patent term adjustment has been determined to be **566** days. The USPTO will *sua sponte* issue a certificate of correction reflecting the amount of PTA days determined by the recalculation.

Prior to the issuance of the certificate of correction, the USPTO will afford patentee an opportunity to be heard and request reconsideration. Accordingly, patentee has **one month or thirty (30) days**, whichever is longer, to file a request for reconsideration of this patent term adjustment calculation. See 35 U.S.C. 154(b)(3)(B)(ii) and 37 CFR 1.322(a)(4). No extensions of time will be granted under 37 CFR 1.136.

Patentee should use document code PET.OP if electronically filing a request for reconsideration of this patent term adjustment calculation. The patentee must also include the information required by 37 CFR 1.705(b)(2) and the fee required by 37 CFR 1.18(e). If patentee does not file a timely request for reconsideration of this patent term adjustment calculation including the information required by 37 CFR 1.705(b)(2) and the fee required by 37 CFR 1.18(e), the USPTO will issue a certificate of correction reflecting the PTA determination noted above.

Patentee should be aware that in order to preserve the right to review in the United States District Court for the District of Columbia of the USPTO patent term adjustment determination, patentee must ensure that he or she also take the steps required under 35 U.S.C. 154(b)(4)(A) in a timely manner. Nothing in the request for recalculation should be construed as providing an alternative time frame for commencing a civil action under 35 U.S.C. 154(b)(4)(A).

Any questions concerning this decision should be directed to the Office of Patent Legal Administration at 571-272-7702.

UNITED STATES PATENT AND TRADEMARK OFFICE

Commissioner for Patents
United States Patent and Trademark Office
P.O. Box 1450
Alexandria, VA 22313-1450
www.uspto.gov

GOODWIN PROCTER LLP
PATENT ADMINISTRATOR
EXCHANGE PLACE
BOSTON MA 02109-2881

COPY MAILED

AUG 13 2007

OFFICE OF PETITIONS

In re Application of
Ashis K. Saha et al.
Application No. 11/491,766
Filed: July 24, 2006
Attorney Docket No. **EPX-021**
(121283/163627)

: DECISION ON PETITION
: UNDER 37 CFR 1.78(a)(6)

This is a decision on the petition under 37 CFR 1.78(a)(6) filed June 29, 2007, to accept an unintentionally delayed claim under 35 U.S.C. §119(e) for the benefit of prior-filed provisional applications 60/753,806 and 60/739,466, set forth in the concurrently filed amendment.

The petition is **DISMISSED.**

A petition under 37 CFR 1.78(a)(6) is only applicable to those applications filed on or after November 29, 2000. Further, the petition is appropriate only after expiration of the period specified in 37 CFR 1.78(a)(5)(ii) and must be filed during the pendency of the nonprovisional application. In addition, the petition must be accompanied by:

(1) the reference required by 35 U.S.C. § 119(e) and 37 CFR 1.78(a)(5)(i) to the prior-filed application, unless previously submitted;
(2) the surcharge set forth in § 1.17(t); and
(3) a statement that the entire delay between the date the claim was due under 37 CFR 1.78(a)(5)(ii) and the date the claim was filed was unintentional. The Director may require additional information where there is a question whether the delay was unintentional.

This pending nonprovisional application was filed on July 24, 2006, within twelve months of the filing date of prior-filed provisional application, 60/784,549 which was filed March 21, 2006, prior-filed provisional application, 60/753,806, which was filed on December 22, 2005 and prior-filed provisional application 60/739,466, which was filed November 23, 2005, and for which priority is claimed. A reference to the prior-filed provisional applications has been included in an amendment to the first sentence of the specification following the title.

However, the amendment is not acceptable as drafted since it improperly incorporates by reference the prior-filed applications. An incorporation by reference statement

added after an application's filing date is not effective because no new matter can be added to an application after its filing date (*see* 35 U.S.C. § 132(a)). If an incorporation by reference statement is included in an amendment to the specification to add a benefit claim under 35 U.S.C. § 119 after the filing date of the application, the amendment would not be proper. When a benefit claim under 35 U.S.C. § 119 is submitted after the filing of an application, the reference to the prior application cannot include an incorporation by reference statement of the prior application. *See* Dart Industries v. Banner, 636 F.2d 684, 207 USPQ 273 (C.A.D.C. 1980). *Note* MPEP §§ 201.06(c) and 608.04(b).

Before the petition under 37 CFR § 1.78(a)(6) can be granted, a renewed petition and either a Supplemental Application Data Sheet (signed in compliance with 37 CFR 1.33(b) or a substitute amendment (complying with the provisions of 37 CFR 1.121 and in compliance with 37 CFR 1.78(a)(5)(i)) to correct the above matters are required.

Further correspondence with respect to this matter should be addressed as follows:

By mail: Mail Stop PETITIONS
Commissioner for Patents
Post Office Box 1450
Alexandria, VA 22313-1450

By hand: Customer Service Window
Mail Stop Petitions
Randolph Building
401 Dulany Street
Alexandria, VA 22314

By fax: (571) 273-8300
ATTN: Office of Petitions

Any questions concerning this matter may be directed to Senior Petitions Attorney Patricia Faison-Ball at (571) 272-3212.

Nancy Johnson
Senior Petitions Attorney
Office of Petitions

UNITED STATES PATENT AND TRADEMARK OFFICE

Commissioner for Patents
United States Patent and Trademark Office
P.O. Box 1450
Alexandria, VA 22313-1450
www.uspto.gov

GOODWIN PROCTER LLP
PATENT ADMINISTRATOR
EXCHANGE PLACE
BOSTON MA 02109-2881

COPY MAILED

DEC 0 5 2007

OFFICE OF PETITIONS

In re Application of
Ashis K. Saha et al.
Application No. 11/491,766
Filed: July 24, 2006
Attorney Docket No. **EPX-021**
(121283/163627)

: DECISION ON PETITION
: UNDER 37 CFR 1.78(a)(6)

This is a decision on the renewed petition under 37 CFR 1.78(a)(6), filed October 25, 2007, to accept an unintentionally delayed claim under 35 U.S.C. §119(e) for the benefit of prior-filed provisional applications 60/753,806 and 60/739,466, set forth in the concurrently filed amendment.

The petition is **GRANTED.**

A petition filed June 29, 2007 was dismissed August 13, 2007 because the amendment filed with the petition improperly incorporated by reference the prior filed application. Comes now petitioner with the instant renewed petition.

A petition under 37 CFR 1.78(a)(6) is only applicable to those applications filed on or after November 29, 2000. Further, the petition is appropriate only after expiration of the period specified in 37 CFR 1.78(a)(5)(ii) and must be filed during the pendency of the nonprovisional application. In addition, the petition must be accompanied by:

(1) the reference required by 35 U.S.C. § 119(e) and 37 CFR 1.78(a)(5)(i) to the prior-filed application, unless previously submitted;
(2) the surcharge set forth in § 1.17(t); and
(3) a statement that the entire delay between the date the claim was due under 37 CFR 1.78(a)(5)(ii) and the date the claim was filed was unintentional. The Director may require additional information where there is a question whether the delay was unintentional.

The instant nonprovisional application was filed after November 29, 2000, and the claim herein for the benefit of priority to the prior-filed provisional application is submitted after expiration of the period specified in 37 CFR 1.78(a)(5)(ii). Therefore, this is a proper petition under 37 CFR 1.78(a)(6).

This pending nonprovisional application was filed on July 24, 2006, within twelve months of the filing date of prior-filed provisional application, 60/784,549 which was filed March 21, 2006, prior-filed provisional application, 60/753,806, which was filed on December 22, 2005 and prior-filed provisional application 60/739,466, which was filed November 23, 2005, and for which priority is claimed. A reference to the prior-filed provisional applications has been included in an amendment to the first sentence of the specification following the title.

The granting of the petition to accept the delayed benefit claim to the prior-filed application under 37 CFR 1.78(a)(6) should not be construed as meaning that the instant application is entitled to the benefit of the filing date of the prior-filed application. In order for the instant application to be entitled to the benefit of the prior-filed application, all other requirements under 35 U.S.C. §119(e) and 37 CFR 1.78(a)(4) and (a)(5) must be met. Similarly, the fact that the corrected Filing Receipt accompanying this decision on petition includes the prior-filed application should not be construed as meaning that applicant is entitled to the claim for benefit of priority to the prior-filed application noted thereon. Accordingly, the examiner will, in due course, consider this benefit claim and determine whether the instant application is entitled to the benefit of the earlier filing date.

A corrected Filing Receipt, which includes the priority claim to the prior-filed provisional application, accompanies this decision on petition.

The fee for an unintentionally delayed claim of priority in the amount of $1,370.00 was paid with the petition filed June 29, 2007 and there is no need for any additional fees.

Any inquiries concerning this decision may be directed to Senior Petitions Attorney Patricia Faison-Ball at (571) 272-3212. All other inquiries concerning either the examination procedures or status of the application should be directed to the Technology Center.

This matter is being referred to Technology Center AU 1626 for appropriate action on the amendment submitted October 25, 2007, including consideration by the examiner of the claim under 35 U.S.C. §119(e) for the benefit of priority to prior-filed Provisional Application Nos. 60/753,806 and 60/739,466.

Nancy Johnson
Senior Petitions Attorney
Office of Petitions

ATTACHMENT: Corrected Filing Receipt

UNITED STATES PATENT AND TRADEMARK OFFICE

UNITED STATES DEPARTMENT OF COMMERCE
United States Patent and Trademark Office
Address: COMMISSIONER FOR PATENTS
P.O. Box 1450
Alexandria, Virginia 22313-1450
www.uspto.gov

APPLICATION NUMBER	FILING or 371(c) DATE	GRP ART UNIT	FIL FEE REC'D	ATTY.DOCKET.NO	TOT CLAIMS	IND CLAIMS
11/491,766	07/24/2006	1626	3040	EPX-021 (121283/163627)	38	3

CONFIRMATION NO. 4980

51414
GOODWIN PROCTER LLP
PATENT ADMINISTRATOR
EXCHANGE PLACE
BOSTON, MA 02109-2881

CORRECTED FILING RECEIPT

Date Mailed: 11/21/2007

Receipt is acknowledged of this non-provisional patent application. The application will be taken up for examination in due course. Applicant will be notified as to the results of the examination. Any correspondence concerning the application must include the following identification information: the U.S. APPLICATION NUMBER, FILING DATE, NAME OF APPLICANT, and TITLE OF INVENTION. Fees transmitted by check or draft are subject to collection. Please verify the accuracy of the data presented on this receipt. **If an error is noted on this Filing Receipt, please write to the Office of Initial Patent Examination's Filing Receipt Corrections. Please provide a copy of this Filing Receipt with the changes noted thereon. If you received a "Notice to File Missing Parts" for this application, please submit any corrections to this Filing Receipt with your reply to the Notice. When the USPTO processes the reply to the Notice, the USPTO will generate another Filing Receipt incorporating the requested corrections**

Applicant(s)

Ashis K. Saha, Stow, MA;
Nili Schutz, Tel-Aviv, ISRAEL;
Anurag Sharadendu, Bedford, NH;
Dilara McCauley, Cambridge, MA;
Mercedes Lobera, Concord, MA;
Yael Marantz, Kadima, ISRAEL;
Jian Lin, Walpole, MA;
Srinivasa Rao Cheruku, Lexington, MA;
Pini Orbach, Needham, MA;
Anurag Sharadendu, Bedford, MA;
Robert Christian Penland, Watertown, MA;
Kimberley Gannon, Watertown, MA;
Sharon Shacham, Newton, MA;
Silvia Noiman, Herzliyya, ISRAEL;
Oren Becker, Mevaseret Zion, ISRAEL;

Assignment For Published Patent Application

PREDIX PHARMACEUTICAL HOLDINGS

Power of Attorney: The patent practitioners associated with Customer Number 051414

Domestic Priority data as claimed by applicant

This appln claims benefit of 60/784,549 03/21/2006
and claims benefit of 60/753,806 12/22/2005
and claims benefit of 60/784,549 03/21/2006

Foreign Applications

If Required, Foreign Filing License Granted: 08/08/2006

The country code and number of your priority application, to be used for filing abroad under the Paris Convention, is **US 11/491,766**

Projected Publication Date: Not Applicable

Non-Publication Request: No

Early Publication Request: No

Title

S1P receptor modulating compounds and use thereof

Preliminary Class

549

PROTECTING YOUR INVENTION OUTSIDE THE UNITED STATES

Since the rights granted by a U.S. patent extend only throughout the territory of the United States and have no effect in a foreign country, an inventor who wishes patent protection in another country must apply for a patent in a specific country or in regional patent offices. Applicants may wish to consider the filing of an international application under the Patent Cooperation Treaty (PCT). An international (PCT) application generally has the same effect as a regular national patent application in each PCT-member country. The PCT process **simplifies** the filing of patent applications on the same invention in member countries, but **does not result** in a grant of "an international patent" and does not eliminate the need of applicants to file additional documents and fees in countries where patent protection is desired.

Almost every country has its own patent law, and a person desiring a patent in a particular country must make an application for patent in that country in accordance with its particular laws. Since the laws of many countries differ in various respects from the patent law of the United States, applicants are advised to seek guidance from specific foreign countries to ensure that patent rights are not lost prematurely.

Applicants also are advised that in the case of inventions made in the United States, the Director of the USPTO must issue a license before applicants can apply for a patent in a foreign country. The filing of a U.S. patent application serves as a request for a foreign filing license. The application's filing receipt contains further information and guidance as to the status of applicant's license for foreign filing.

Applicants may wish to consult the USPTO booklet, "General Information Concerning Patents" (specifically, the section entitled "Treaties and Foreign Patents") for more information on timeframes and deadlines for filing foreign patent applications. The guide is available either by contacting the USPTO Contact Center at 800-786-9199, or it can be viewed on the USPTO website at http://www.uspto.gov/web/offices/pac/doc/general/index.html.

For information on preventing theft of your intellectual property (patents, trademarks and copyrights), you may wish to consult the U.S. Government website, http://www.stopfakes.gov. Part of a Department of Commerce initiative, this website includes self-help "toolkits" giving innovators guidance on how to protect intellectual property in specific countries such as China, Korea and Mexico. For questions regarding patent enforcement issues, applicants may call the U.S. Government hotline at 1-866-999-HALT (1-866-999-4158).

LICENSE FOR FOREIGN FILING UNDER

Title 35, United States Code, Section 184

Title 37, Code of Federal Regulations, 5.11 & 5.15

GRANTED

The applicant has been granted a license under 35 U.S.C. 184, if the phrase "IF REQUIRED, FOREIGN FILING LICENSE GRANTED" followed by a date appears on this form. Such licenses are issued in all applications where the conditions for issuance of a license have been met, regardless of whether or not a license may be required as set forth in 37 CFR 5.15. The scope and limitations of this license are set forth in 37 CFR 5.15(a) unless an earlier license has been issued under 37 CFR 5.15(b). The license is subject to revocation upon written notification. The date indicated is the effective date of the license, unless an earlier license of similar scope has been granted under 37 CFR 5.13 or 5.14.

This license is to be retained by the licensee and may be used at any time on or after the effective date thereof unless it is revoked. This license is automatically transferred to any related applications(s) filed under 37 CFR 1.53(d). This license is not retroactive.

The grant of a license does not in any way lessen the responsibility of a licensee for the security of the subject matter as imposed by any Government contract or the provisions of existing laws relating to espionage and the national security or the export of technical data. Licensees should apprise themselves of current regulations especially with respect to certain countries, of other agencies, particularly the Office of Defense Trade Controls, Department of State (with respect to Arms, Munitions and Implements of War (22 CFR 121-128)); the Bureau of Industry and Security, Department of Commerce (15 CFR parts 730-774); the Office of Foreign AssetsControl, Department of Treasury (31 CFR Parts 500+) and the Department of Energy.

NOT GRANTED

No license under 35 U.S.C. 184 has been granted at this time, if the phrase "IF REQUIRED, FOREIGN FILING LICENSE GRANTED" DOES NOT appear on this form. Applicant may still petition for a license under 37 CFR 5.12, if a license is desired before the expiration of 6 months from the filing date of the application. If 6 months has lapsed from the filing date of this application and the licensee has not received any indication of a secrecy order under 35 U.S.C. 181, the licensee may foreign file the application pursuant to 37 CFR 5.15(b).

UNITED STATES PATENT AND TRADEMARK OFFICE

Commissioner for Patents
United States Patent and Trademark Office
P.O. Box 1450
Alexandria, VA 22313-1450
www.uspto.gov

BRACEWELL & GIULIANI LLP
P.O. BOX 61389
HOUSTON TX 77208-1389

COPY MAILED
DEC 09 2008

In re Application of :
COBB, Harvey G. :
Application No. 11/491,790 : DECISION ON PETITION
Filed: July 24, 2006 : TO MAKE SPECIAL UNDER
Attorney Docket No. **019307.000005** : 37 CFR 1.102(c)(1)
:

This is a decision on the petition under 37 CFR 1.102(c)(1), filed October 23, 2008, to make the above-identified application special based on applicant's age as set forth in M.P.E.P. § 708.02, Section IV.

The petition is **DISMISSED**.

A grantable petition to make an application special under 37 CFR 1.102(c)(1) and MPEP § 708.02, Section IV: Applicant's Age, must be accompanied by evidence showing that at least one of the applicants is 65 years of age, or more, such as a birth certificate or a statement by applicant. No fee is required.

The instant petition is not completed as required and does not include the signature and registration number of the attorney.

Further correspondence with respect to this matter should be addressed as follows:

By Mail: Mail Stop PETITION
Commissioner for Patents
P. O. Box 1450
Alexandria, VA 22313-1450

By hand: U. S. Patent and Trademark Office
Customer Service Window, Mail Stop Petitions
Randolph Building
401 Dulany Street
Alexandria, VA 22314

By FAX: (571) 273-8300

Telephone inquiries concerning this decision should be directed to the undersigned at 571-272-4231.

All other inquiries concerning either the examination or status of the application should be directed to the Technology Center.

The application is being forwarded to the Technology Center Art Unit 1792 for action in its regular turn.

Michelle R. Eason
Paralegal Specialist
Office of Petitions

UNITED STATES PATENT AND TRADEMARK OFFICE

Commissioner for Patents
United States Patent and Trademark Office
P.O. Box 1450
Alexandria, VA 22313-1450
www.uspto.gov

BRACEWELL & GIULIANI LLP
P.O. BOX 61389
HOUSTON TX 77208-1389

COPY MAILED

MAR 17 2009

OFFICE OF PETITIONS

In re Application of :
COBB, Harvey G. :
Application No. 11/491,790 : DECISION ON PETITION
Filed: July 24, 2006 : TO MAKE SPECIAL UNDER
Attorney Docket No. **019307.000005** : 37 CFR 1.102(c)(1)
:

This is a decision on the renewed petition under 37 CFR 1.102(c)(1), filed January 20, 2009, to make the above-identified application special based on applicant's age as set forth in M.P.E.P. § 708.02, Section IV.

The petition is **DISMISSED**.

A grantable petition to make an application special under 37 CFR 1.102(c)(1) and MPEP § 708.02, Section IV: Applicant's Age, must be accompanied by evidence showing that at least one of the applicants is 65 years of age, or more, such as a birth certificate or a statement by applicant. No fee is required.

The instant petition is not completed as required and does not include the signatures of either the applicant or attorney of record.

Further correspondence with respect to this matter should be addressed as follows:

By Mail: Mail Stop PETITION
Commissioner for Patents
P. O. Box 1450
Alexandria, VA 22313-1450

By hand: U. S. Patent and Trademark Office
Customer Service Window, Mail Stop Petitions
Randolph Building
401 Dulany Street
Alexandria, VA 22314

By FAX: (571) 273-8300

Telephone inquiries concerning this decision should be directed to the undersigned at 571-272-4231.

All other inquiries concerning either the examination or status of the application should be directed to the Technology Center.

The application is being forwarded to the Technology Center Art Unit 1792 for action in its regular turn.

Michelle R. Eason
Paralegal Specialist
Office of Petitions

PTO/SB/130 (04-09)
Approved for use through 05/31/2009. OMB 0651- 0031
U.S. Patent and Trademark Office; U.S. DEPARTMENT OF COMMERCE
Under the Paperwork Reduction Act of 1995, no persons are required to respond to a collection of information unless it contains a valid OMB control number

PETITION TO MAKE SPECIAL BASED ON AGE FOR ADVANCEMENT OF EXAMINATION UNDER 37 CFR 1.102(c)(1)

Application Information

Application Number	11/491,790	Confirmation Number	4983	Filing Date	2006-07-24
Attorney Docket Number (optional)	019307.000005	Art Unit	1792	Examiner	Carrillo, Bibi Sharidan
First Named Inventor	Harvey G. Cobb				
Title of Invention	Composition and Process for the Removal and Recovery of Hydrocarbons from Substrates				

Attention: Office of Petitions

An application may be made special for advancement of examination upon filing of a petition showing that the applicant is 65 years of age, or more. No fee is required with such a petition. See 37 CFR 1.102(c)(1) and MPEP 708.02 (IV).

APPLICANT HEREBY PETITIONS TO MAKE SPECIAL FOR ADVANCEMENT OF EXAMINATION IN THIS APPLICATION UNDER 37 CFR 1.102(c)(1) and MPEP 708.02 (IV) ON THE BASIS OF THE APPLICANT'S AGE.

A grantable petition requires one of the following items:
(1) Statement by one named inventor in the application that he/she is 65 years of age, or more; or
(2) Certification by a registered attorney/agent having evidence such as a birth certificate, passport, driver's license, etc. showing one named inventor in the application is 65 years of age, or more.

Name of Inventor who is 65 years of age, or older

Given Name	Middle Name	Family Name	Suffix
Harvey	G	Cobb	

A signature of the applicant or representative is required in accordance with 37 CFR 1.33 and 10.18.
Please see 37 CFR 1.4(d) for the format of the signature.

Select (1) or (2) :

○ (1) I am an inventor in this application and I am 65 years of age, or more.

◉ (2) I am an attorney or agent registered to practice before the Patent and Trademark Office, and I certify that I am in possession of evidence, and will retain such in the application file record, showing that the inventor listed above is 65 years of age, or more.

Signature	/Justin K. Murray/	Date (YYYY-MM-DD)	2009-05-11
Name	Justin K. Murray	Registration Number	57995

PTO/SB/130 (04-09)
Approved for use through 05/31/2009. OMB 0651- 0031
U.S. Patent and Trademark Office; U.S. DEPARTMENT OF COMMERCE
Under the Paperwork Reduction Act of 1995, no persons are required to respond to a collection of information unless it contains a valid OMB control number

Privacy Act Statement

The Privacy Act of 1974 (P.L. 93-579) requires that you be given certain information in connection with your submission of the attached form related to a patent application or patent. Accordingly, pursuant to the requirements of the Act, please be advised that: (1) the general authority for the collection of this information is 35 U.S.C. 2(b)(2); (2) furnishing of the information solicited is voluntary; and (3) the principal purpose for which the information is used by the U.S. Patent and Trademark Office is to process and/or examine your submission related to a patent application or patent. If you do not furnish the requested information, the U.S. Patent and Trademark Office may not be able to process and/or examine your submission, which may result in termination of proceedings or abandonment of the application or expiration of the patent.

The information provided by you in this form will be subject to the following routine uses:

1. The information on this form will be treated confidentially to the extent allowed under the Freedom of Information Act (5 U.S.C. 552) and the Privacy Act (5 U.S.C. 552a). Records from this system of records may be disclosed to the Department of Justice to determine whether the Fr eedom of Information Act requires disclosure of these records.

2. A record from this system of records may be disclosed, as a routine use, in the course of presenting evidence to a court, magistrate, or administrative tribunal, including disclosures to opposing counsel in the course of settlement negotiations.

3. A record in this system of records may be disclosed, as a routine use, to a Member of Congress submitting a request involving an individual, to whom the record pertains, when the individual has requested assistance from the Member with respect to the subject matter of the record.

4. A record in this system of records may be disclosed, as a routine use, to a contractor of the Agency having need for the information in order to perform a contract. Recipients of information shall be required to comply with the requirements of the Privacy Act of 1974, as amended, pursuant to 5 U.S.C. 552a(m).

5. A record related to an International Application filed under the Patent Cooperation Treaty in this system of records may be disclosed, as a routine use, to the International Bureau of the World Intellectual Property Organization, pursuant to the Patent Cooperation Treaty.

6. A record in this system of records may be disclosed, as a routine use, to another federal agency for purposes of National Security review (35 U.S.C. 181) and for review pursuant to the Atomic Energy Act (42 U.S.C. 218(c)).

7. A record from this system of records may be disclosed, as a routine use, to the Administrator, General Services, or his/her designee, during an inspection of records conducted by GSA as part of that agency's responsibility to recommend improvements in records management practices and programs, under authority of 44 U.S.C. 2904 and 2906. Such disclosure shall be made in accordance with the GSA regulations governing inspection of records for this purpose, and any other relevant (i.e., GSA or Commerce) directive. Such disclosure shall not be used to make determinations about indivi duals.

8. A record from this system of records may be disclosed, as a routine use, to the public after either publication of the application pursuant to 35 U.S.C. 122(b) or issuance of a patent pursuant to 35 U.S.C. 151. Further, a record may be disclosed, subject to the limitations of 37 CFR 1.14, as a routine use, to the public if the record was filed in an application which became abandoned or in which the proceedings were terminated and which application is referenced by either a published application, an application open to public inspections or an issued patent.

9. A record from this system of records may be disclosed, as a routine use, to a Federal, State, or local law enforcement agency, if the USPTO becomes aware of a violation or potential violation of law or regulation.

UNITED STATES PATENT AND TRADEMARK OFFICE

Commissioner for Patents
United States Patent and Trademark Office
P.O. Box 1450
Alexandria, VA 22313-1450
www.uspto.gov

In re Application of
Harvey G. Cobb

Application No. 11491790

Filed: July 24,2006

Attorney Docket No. 019307.000005

:
:
:DECISION ON PETITION TO MAKE SPECIAL
:UNDER 37 CFR 1.102(c)(1)
:

This is a decision on the electronic petition under 37 CFR 1.102 (c)(1), filed 11-MAY-2009 to make the above-identified application special based on applicant's age as set forth in MPEP § 708.02, Section IV.

The petition is **GRANTED**.

A grantable petition to make an application special under 37 CFR 1.102(c)(1), MPEP § 708.02, Section IV: Applicant's Age must include a statement by applicant or a registered practitioner having evidence that applicant is at least 65 years of age. No fee is required.

Accordingly, the above-identified application has been accorded "special" status and will be taken up for action by the examiner upon the completion of all pre-examination processing.

Telephone inquiries concerning this electronic decision should be directed to the Electronic Business Center at 866-217-9197.

All other inquiries concerning either the examination or status of the application should be directed to the Technology Center.

UNITED STATES PATENT AND TRADEMARK OFFICE

UNITED STATES DEPARTMENT OF COMMERCE
United States Patent and Trademark Office
Address: COMMISSIONER FOR PATENTS
P.O. Box 1450
Alexandria, Virginia 22313-1450
www.uspto.gov

APPLICATION NO.	FILING DATE	FIRST NAMED INVENTOR	ATTORNEY DOCKET NO.	CONFIRMATION NO.
11/491,799	07/24/2006	Swarup Kumar Mohalik	200504338-2	6724

7590 04/14/2008

HEWLETT PACKARD COMPANY
P O BOX 272400, 3404 E. HARMONY ROAD
INTELLECTUAL PROPERTY ADMINISTRATION
FORT COLLINS, CO 80527-2400

EXAMINER	
ZIMMERMAN, BRIAN A	

ART UNIT	PAPER NUMBER
2612	

NOTIFICATION DATE	DELIVERY MODE
04/14/2008	ELECTRONIC

DECISION GRANTING PETITION UNDER 37 CFR 1.138(d)

The declaration of express abandonment is recognized

This is in response to the petition under 37 CFR 1.138(d), requesting for a refund of any previously paid search fee and excess claims fee in the above-identified application.

The petition is granted.

The express abandonment is recognized. Any previously paid search fee and excess claims fee are hereby refunded.

Telephone inquiries should be directed to the Office of Data Management at (571) 272-4200.

Patent Publication Branch
Office of Data Management

Adjustment Date: 04/15/2008 DTERRY 11491799
07/26/2006 SSITHIB1 00000034 082025
02 FC:1111 500.00 CR

UNITED STATES PATENT AND TRADEMARK OFFICE

Commissioner for Patents
United States Patent and Trademark Office.
P.O. Box 1450
Alexandria, VA 22313-1450
www.uspto.gov

THOMAS, KAYDEN, HORSTEMEYER & RISLEY, L.L.P
100 GALLERIA PARKWAY, NW
STE 1750
ATLANTA, GA 30339-5948

COPY MAILED

NOV 07 2006

OFFICE OF PETITIONS

In re Application of
Ruo-Pan Huang
Application No. 11/491,802
Filed: July 24, 2006
Attorney Docket No. 220803-1021

: DECISION GRANTING
: PETITION

This is a decision on the filing date petition filed August 29, 2006, under 37 CFR 1.57.

The application was filed on July 24, 2006. However, on August 14, 2006 the Office of Initial Patent Examination mailed a Notice of Incomplete Application stating that the application had not been filed with a specification and thus, the application could not be accorded a filing date.

In response, the present petition was filed. Petitioner acknowledges that the specification as well as drawings were inadvertently omitted but argues that the instant application, upon filing, properly claimed priority to U.S. Non-Provisional Application 10/275,696, which was filed November 7, 2002. With the petition was filed a specification, claims, drawings and abstract.

On September 21, 2004, § 1.57 was added to read, in pertinent part that:

> (a) Subject to the conditions and requirements of this paragraph, if all or a portion of the specification or drawing(s) is inadvertently omitted from an application, but the application contains ... a claim under 1.78 for the benefit of a prior-filed provisional, nonprovisional or international application, that was present on the filing date of the application, and the inadvertently omitted portion of the specification or drawing(s) is completely contained in the prior-filed application, the claim under ... § 1.78 shall also be considered an incorporation by reference of the prior-filed application as to the inadvertently omitted portion of the specification or drawing(s).
>
> (1) The application must be amended to include the inadvertently omitted portion of the specification or drawing(s) within any time period set by the Office, but in no case later than the close of prosecution as defined by § 1.114(b), or abandonment of the application, whichever occurs earlier;
>
> (3) If an application is not otherwise entitled to a filing date under § 1.53(b), the

amendment must be by way of a petition pursuant to this paragraph accompanied by the fee set forth in § 1.17(f).

In view of 37 CFR 1.57 which provides that a proper priority claim under 37 CFR 1.55 or 37 CFR 1.78 can also be considered an incorporation by reference of the prior filed application as to the inadvertently omitted specification and drawings, the argument is persuasive and the petition therefore is **GRANTED** .

Since the petition was required to accord the requested filing date and since the error occurred through no wrongdoing on the part of the USPTO, the petition fee in the amount of $400.00 has been charged to petitioner's deposit account and cannot be refunded.

The primary examiner is expected to compare the specification, claims , drawings and abstract supplied on August 29, 2006, to the disclosure of U.S. Non-provisional application no. 10/275,696 in order to verify that they were in fact, a part of the disclosure of the parent application.

The application is being forwarded to the Office of Initial Patent Examination for correction of the filing date to July 24, 2006, using the application papers filed July 24, 2006 and those submitted August 29, 2006 as a part of the original disclosure.

Telephone inquiries concerning this matter should be directed to Senior Petitions Attorney Patricia Faison-Ball at (571) 272-3212.

Charles Pearson
Director
Office of Petitions

UNITED STATES PATENT AND TRADEMARK OFFICE

UNITED STATES DEPARTMENT OF COMMERCE
United States Patent and Trademark Office
Address: COMMISSIONER FOR PATENTS
P.O. Box 1450
Alexandria, Virginia 22313-1450
www.uspto.gov

CARLSON, GASKEY & OLDS, P.C.
400 WEST MAPLE ROAD
SUITE 350
BIRMINGHAM, MI 48009

Mail Date: 06/04/2010

Applicant	: Donald G. Kilroy	: DECISION ON REQUEST FOR
Patent Number	: 7626797	: RECALCULATION of PATENT
Issue Date	: 12/01/2009	: TERM ADJUSTMENT IN VIEW
Application No	: 11/491,803	: OF WYETH AND NOTICE OF INTENT TO
Filed	: 07/24/2006	: ISSUE CERTIFICATE OF CORRECTION
		:

The Request for Recalculation is **GRANTED** to the extent indicated.

The patent term adjustment has been determined to be **353** days. The USPTO will *sua sponte* issue a certificate of correction reflecting the amount of PTA days determined by the recalculation.

Prior to the issuance of the certificate of correction, the USPTO will afford patentee an opportunity to be heard and request reconsideration. Accordingly, patentee has **one month or thirty (30) days**, whichever is longer, to file a request for reconsideration of this patent term adjustment calculation. See 35 U.S.C. 154(b)(3)(B)(ii) and 37 CFR 1.322(a)(4). No extensions of time will be granted under 37 CFR 1.136.

Patentee should use document code PET.OP if electronically filing a request for reconsideration of this patent term adjustment calculation. The patentee must also include the information required by 37 CFR 1.705(b)(2) and the fee required by 37 CFR 1.18(e). If patentee does not file a timely request for reconsideration of this patent term adjustment calculation including the information required by 37 CFR 1.705(b)(2) and the fee required by 37 CFR 1.18(e), the USPTO will issue a certificate of correction reflecting the PTA determination noted above.

Patentee should be aware that in order to preserve the right to review in the United States District Court for the District of Columbia of the USPTO patent term adjustment determination, patentee must ensure that he or she also take the steps required under 35 U.S.C. 154(b)(4)(A) in a timely manner. Nothing in the request for recalculation should be construed as providing an alternative time frame for commencing a civil action under 35 U.S.C. 154(b)(4)(A).

Any questions concerning this decision should be directed to the Office of Patent Legal Administration at 571-272-7702.

UNITED STATES PATENT AND TRADEMARK OFFICE

Commissioner for Patents
United States Patent and Trademark Office
P.O. Box 1450
Alexandria, VA 22313-1450
www.uspto.gov

Peter S. Canelias
Law Offices of Peter S. Canelias
420 Lexington Avenue, Suite 300
New York NY 10170

MAILED

MAY 10 2010

OFFICE OF PETITIONS

In re Application of :
Jonathan B. Quint et al. :
Application No. 11/491,807 : DECISION ON PETITION
Filed: July 24, 2006 :
Attorney Docket No. BC7 :

This is a decision on the petition under the unintentional provisions of 37 CFR 1.137(b), filed February 4, 2010, to revive the above-identified application.

The petition is **GRANTED**.

This application became abandoned for failure to timely pay the issue and publication fees on or before October 14, 2009, as required by the Notice of Allowance and Fee(s) Due, mailed July 14, 2009. Accordingly, the date of abandonment of this application is October 15, 2009.

The petition satisfies the requirements of 37 CFR 1.137(b) in that petitioner has supplied (1) the reply in the form of payment of the issue fee of $755 and the publication fee of $300, (2) the petition fee of $810; and (3) a proper statement of unintentional delay.

Telephone inquiries concerning this decision should be directed to JoAnne Burke at (571) 272-4584.

This application is being referred to the Office of Data Management for processing into a patent.

JoAnne Burke
Petitions Examiner
Office of Petitions

UNITED STATES PATENT AND TRADEMARK OFFICE

Commissioner for Patents
United States Patent and Trademark Office
P.O. Box 1450
Alexandria, VA 22313-1450
www.uspto.gov

COPY MAILED

MAR 3 1 2008

EFFICIENCY INVENTIONS & PATENTS LICENSING, LLC
STANLEY E. FOSTER "MGRM"
P.O. BOX 2344
TITUSVILLE FL 32781-2344

In re Application of

STANLEY E. FOSTER
Application No. 11/491,812
Filed: July 24, 2006
Attorney Docket No.

DECISION ON PETITION
TO MAKE SPECIAL UNDER
37 CFR 1.102(c)(1)

This is a decision on the petition under 37 CFR 1.102(c)(1), filed March 21, 2008, to make the above-identified application special based on applicant's age as set forth in M.P.E.P. § 708.02, Section IV.

The petition is **GRANTED**.

A grantable petition to make an application special under 37 CFR 1.102(c)(1) and MPEP § 708.02, Section IV: Applicant's Age, must be accompanied by evidence showing that at least one of the applicants is 65 years of age, or more, such as a birth certificate or a statement by applicant. No fee is required.

The evidence submitted with the instant petition is a copy of Stanley Forster license indicating that he is at least 65 years of age. Accordingly, the above-identified application has been accorded "special" status.

Telephone inquiries concerning this decision should be directed to Tredelle Jackson at 571-272-2783.

All other inquiries concerning either the examination or status of the application should be directed to the Technology Center.

The application is being forwarded to the Technology Center Art Unit 3625 for action on the merits commensurate with this decision.

Tredelle D. Jackson
Paralegal Specialist
Office of Petitions

UNITED STATES PATENT AND TRADEMARK OFFICE

UNITED STATES DEPARTMENT OF COMMERCE
United States Patent and Trademark Office
Address: COMMISSIONER FOR PATENTS
P.O. Box 1450
Alexandria, Virginia 22313-1450
www.uspto.gov

COATS & BENNETT, PLLC
1400 Crescent Green, Suite 300
Cary, NC 27518

Mail Date: 04/21/2010

Applicant	: Shousheng He	: DECISION ON REQUEST FOR
Patent Number	: 7599454	: RECALCULATION of PATENT
Issue Date	: 10/06/2009	: TERM ADJUSTMENT IN VIEW
Appliction No	: 11/491,832	: OF WYETH AND NOTICE OF INTENT TO
Filed	: 07/24/2006	: ISSUE CERTIFICATE OF CORRECTION
		:

The Request for Recalculation is **GRANTED** to the extent indicated.

The patent term adjustment has been determined to be **711** days. The USPTO will *sua sponte* issue a certificate of correction reflecting the amount of PTA days determined by the recalculation.

Prior to the issuance of the certificate of correction, the USPTO will afford patentee an opportunity to be heard and request reconsideration. Accordingly, patentee has **one month or thirty (30) days**, whichever is longer, to file a request for reconsideration of this patent term adjustment calculation. See 35 U.S.C. 154(b)(3)(B)(ii) and 37 CFR 1.322(a)(4). No extensions of time will be granted under 37 CFR 1.136.

Patentee should use document code PET.OP if electronically filing a request for reconsideration of this patent term adjustment calculation. The patentee must also include the information required by 37 CFR 1.705(b)(2) and the fee required by 37 CFR 1.18(e). If patentee does not file a timely request for reconsideration of this patent term adjustment calculation including the information required by 37 CFR 1.705(b)(2) and the fee required by 37 CFR 1.18(e), the USPTO will issue a certificate of correction reflecting the PTA determination noted above.

Patentee should be aware that in order to preserve the right to review in the United States District Court for the District of Columbia of the USPTO patent term adjustment determination, patentee must ensure that he or she also take the steps required under 35 U.S.C. 154(b)(4)(A) in a timely manner. Nothing in the request for recalculation should be construed as providing an alternative time frame for commencing a civil action under 35 U.S.C. 154(b)(4)(A).

Any questions concerning this decision should be directed to the Office of Patent Legal Administration at 571-272-7702.

UNITED STATES PATENT AND TRADEMARK OFFICE

Commissioner for Patents
United States Patent and Trademark Office
P.O. Box 1450
Alexandria, VA 22313-1450
www.uspto.gov

LATHROP & GAGE LC
4845 PEARL EAST CIRCLE, SUITE 300
BOULDER CO 80301

COPY MAILED

JAN 12 2007

OFFICE OF PETITIONS

In re Application of :
STALLING :
Application No. 11/491,875 :
Filed: July 24, 2006 :
Attorney Docket No. 05E142 446381 :

DECISION ON PETITION
TO WITHDRAW
FROM RECORD

This is a decision on the Request to Withdraw as attorney or agent of record under 37 C.F.R. § 1.36(b), filed October 20, 2006.

The request is **APPROVED**.

A grantable request to withdraw as attorney/agent of record must be signed by every attorney/agent seeking to withdraw or contain a clear indication that one attorney is signing on behalf of another/others. A request to withdraw will not be approved unless at least 30 (thirty) days would remain between the date of approval and the later of the expiration date of a time to file a response or the expiration date of the maximum time period which can be extended under 37 C.F.R. § 1.136(a).

The request was signed by Gerald Kraai on behalf of all attorneys of record who are associated with customer No. 30955. All attorneys/agents associated with the Customer Number 30955 have been withdrawn. Applicant is reminded that there is no attorney of record at this time.

The request to change the correspondence of record is not acceptable as the requested correspondence address is not that of: (1) the first named signing inventor; or (2) an intervening assignee of the entire interest under 37 C.F.R 3.71. All future communications from the Office will be directed to the first named signing inventor at the first copied address below until otherwise properly notified by the applicant.

Telephone inquiries concerning this decision should be directed to the undersigned at 571-272-7253.

Monica A. Graves
Petitions Examiner
Office of Petitions

cc: **JARED D. STALLING**
20722 EAST 38TH PLACE
DENVER, CO 80249

cc: **KULAK ROCK LL**
1801 CALIFORNIA STREET, SUITE 3100
DENVER, CA 80202

UNITED STATES PATENT AND TRADEMARK OFFICE

UNITED STATES DEPARTMENT OF COMMERCE
United States Patent and Trademark Office
Address: COMMISSIONER FOR PATENTS
P.O. Box 1450
Alexandria, Virginia 22313-1450
www.uspto.gov

APPLICATION NUMBER	FILING OR 371 (c) DATE	FIRST NAMED APPLICANT	ATTY. DOCKET NO./TITLE
11/491,875	07/24/2006	Jared D. Stalling	05E142 446381

CONFIRMATION NO. 5296

OC000000021977649

30955
LATHROP & GAGE LC
4845 PEARL EAST CIRCLE
SUITE 300
BOULDER, CO 80301

Date Mailed: 01/12/2007

NOTICE REGARDING CHANGE OF POWER OF ATTORNEY

This is in response to the Power of Attorney filed 10/20/2006.

- The withdrawal as attorney in this application has been accepted. Future correspondence will be mailed to the new address of record. 37 CFR 1.33.

MONICA A GRAVES
OP (571) 272-7253

FORMER ATTORNEY/AGENT COPY

SPE RESPONSE FOR CERTIFICATE OF CORRECTION

Paper No.:

DATE :

TO SPE OF : ART UNIT

SUBJECT : Request for Certificate of Correction on Patent No.:

A response is requested with respect to the accompanying request for a certificate of correction.

Please complete this form and return with file, within **7** days to:
Certificates of Correction Branch - ST (South Tower) 9A22
Palm location **7590** - Tel. No. (703) 305-8309

With respect to the change(s) requested, correcting Office and/or Applicant's errors, should the patent read as shown in the certificate of correction? No new matter should be introduced, nor should the scope or meaning of the claims be changed.

Thank You For Your Assistance **Certificates of Correction Branch**

The request for issuing the above-identified correction(s) is hereby:

Note your decision on the appropriated box.

☐ **Approved** All changes apply.

☐ **Approved in Part** Specify below which changes **do not** apply.

☐ **Denied** State the reasons for denial below.

Comments:

SPE: Art Unit

UNITED STATES PATENT AND TRADEMARK OFFICE

Commissioner for Patents
United States Patent and Trademark Office
P.O. Box 1450
Alexandria, VA 22313-1450
www.uspto.gov

John E. Golub
Nave Shaanan 2
Jerusalem 93707 IL ISRAEL

COPY MAILED

JAN 05 2007

OFFICE OF PETITIONS

In re Application of:
Darcie et al.
Application No. 11/491888
Filing or 371(c) Date: 10/06/2006
Title of Invention:
APPARATUS, SYSTEM, AND METHOD FOR REAL-TIME COLLABORATION OVER A DATA NETWORK

DECISION DISMISSING PETITION UNDER 37 CFR 1.47(a)

This Decision is in response to the Petition Under 37 CFR § 1.47, filed October 6, 2006, to allow the other inventor(s) to proceed with the application on behalf of himself or herself and the nonsigning inventor(s).

The petition is **dismissed**.

Rule 47 applicant is given TWO (2) MONTHS from the mailing date of this decision to reply, correcting the below-noted deficiencies. Any reply should be entitled "Request for Reconsideration of Petition Under [insert the applicable code section]"; should only address the deficiencies noted below, except that the reply may include an oath or declaration executed by the non-signing inventor. Failure to respond will result in abandonment of the application. Any extensions of time will be governed by 37 CFR 1.136(a).

The above-identified application was deposited on July 25, 2006[1], without, a fully executed oath or declaration. The Office mailed a Notice to File Missing Parts of Nonprovisional Application ("Notice"), on August 10, 2006, requiring *inter alia*, a properly signed oath or declaration.

Applicant files the instant petition in response to the Notice and alleges that inventor Darcie refused to join in the application as evidenced by an email, a copy of which has been included in the petition, and that inventor Dreissen cannot be found or is unwilling to join in the application, because an email was sent to inventor Dreissen, but he has yet to respond to the email.

[1] Applicant is advised that the filing date was changed to October 6, 2006 when Applicant filed a Substitute Amendment. Applicant may petition for correction if this was an error on the part of this Office.

Applicable Law

A grantable petition under 37 CFR 1.47(a) requires: (1) proof that the non-signing inventor cannot be reached or refuses to sign the oath or declaration after having been presented with the application papers (specification, claims and drawings); (2) an acceptable oath or declaration in compliance with 35 U.S.C. §§ 115 and 116; (3) the petition fee; and (4) a statement of the last known address of the non-signing inventor. Applicant lacks item (1) set forth above.

As to item (1), applicant is advised that, "[w]here inability to find or reach a nonsigning inventor "after diligent effort" is the reason for filing under 37 CFR 1.47, a statement of facts should be submitted that fully describes the exact facts which are relied on to establish that a diligent effort was made. The fact that a nonsigning inventor is on vacation or out of town and is therefore temporarily unavailable to sign the declaration is not an acceptable reason for filing under 37 CFR 1.47." MPEP 409.03(d).

Here, inventor Darcie, the email filed with the petition and putatively evidencing his refusal to join in the application, says that he is on vacation and will attend to the matted when he returns.

The evidence in the form of the email does not constitute a refusal.

As to inventor both inventors Darcie and Driessen, Applicant is required to send the application to the inventors for review.

> A refusal by an inventor to sign an oath or declaration when the inventor has not been presented with the application papers does not itself suggest that the inventor is refusing to join the application unless it is clear that the inventor understands exactly what he or she is being asked to sign and refuses to accept the application papers. A copy of the application papers should be sent to the last known address of the non-signing inventor, or, if the nonsigning inventor is represented by counsel, to the address of the nonsigning inventor's attorney. The fact that an application may contain proprietary information does not relieve the 37 CFR 1.47 applicant of the responsibility to present the application papers to the inventor if the inventor is willing to receive the papers in order to sign the oath or declaration.

MPEP 409.03(d).

A copy of the application should be sent to both inventors before a refusal to join in the application may be alleged.

Further correspondence with respect to this matter should be addressed as follows:

By mail: Commissioner for Patents
PO Box 1450
Alexandria, VA 22313-1450

By FAX: (571) 273-8300
Attn: Office of Petitions

By hand: Customer Service Window
Randolph Building
401 Dulany Street
Alexandria, VA 22314

Telephone inquiries concerning this matter should be directed to the undersigned at (571) 272-3232.

Derek L. Woods
Attorney
Office of Petitions

UNITED STATES PATENT AND TRADEMARK OFFICE

COMMISSIONER FOR PATENTS
UNITED STATES PATENT AND TRADEMARK OFFICE
P.O. BOX 1450
ALEXANDRIA, VA 22313-1450
www.uspto.gov

CARLSON, GASKEY & OLDS/PRATT & WHITNEY
400 WEST MAPLE ROAD
SUITE 350
BIRMINGHAM MI 48009

COPY MAILED

SEP 26 2007

OFFICE OF PETITIONS

In re Application of
Coulter
Application No. 11/491,892
Filed: July 24, 2006
Attorney Docket No. 67,097-629PUS1/PA-0001179

DECISION ON PETITION

This is a decision on the petition under 37 CFR 1.182, filed, August 27, 2007, to correct the spelling of the name of inventor "COREY JOSEPH MICHAEL COREY" to -- COREY JOSEPH MICHAEL COULTER --.
The petition is **GRANTED**.

Office records have been corrected to reflect the correct spelling of the above-named inventor. A corrected Filing Receipt, which sets forth the correct spelling of the above-named inventor, accompanies this decision on petition.

As authorized, the $400 fee for the petition under 37 CFR 1.182 has been assessed to petitioner's deposit account.

Any questions concerning this matter may be directed to the undersigned at (571) 272-3205.

The matter is being referred to the undersigned for Technology Center 2600.

Alesia M. Brown
Petitions Attorney
Office of Petitions

ATTACHMENT: Corrected Filing Receipt

UNITED STATES PATENT AND TRADEMARK OFFICE

UNITED STATES DEPARTMENT OF COMMERCE
United States Patent and Trademark Office
Address: COMMISSIONER FOR PATENTS
P.O. Box 1450
Alexandria, Virginia 22313-1450
www.uspto.gov

APPL NO.	FILING OR 371(c) DATE	ART UNIT	FIL FEE REC'D	ATTY.DOCKET NO	TOT CLMS	IND CLMS
11/491,892	07/24/2006	2628	1000	67,097-629PUS1/PA-0001179	14	3

CONFIRMATION NO. 5490

54549
CARLSON, GASKEY & OLDS/PRATT & WHITNEY
400 WEST MAPLE ROAD
SUITE 350
BIRMINGHAM, MI 48009

CORRECTED FILING RECEIPT

OC000000026011859

Date Mailed: 09/26/2007

Receipt is acknowledged of this nonprovisional patent application. The application will be taken up for examination in due course. Applicant will be notified as to the results of the examination. Any correspondence concerning the application must include the following identification information: the U.S. APPLICATION NUMBER, FILING DATE, NAME OF APPLICANT, and TITLE OF INVENTION. Fees transmitted by check or draft are subject to collection. Please verify the accuracy of the data presented on this receipt. **If an error is noted on this Filing Receipt, please write to the Office of Initial Patent Examination's Filing Receipt Corrections. Please provide a copy of this Filing Receipt with the changes noted thereon. If you received a "Notice to File Missing Parts" for this application, please submit any corrections to this Filing Receipt with your reply to the Notice. When the USPTO processes the reply to the Notice, the USPTO will generate another Filing Receipt incorporating the requested corrections (if appropriate).**

Applicant(s)

Corey Joseph Michael Coulter, Simi Valley, CA;

Assignment For Published Patent Application

United Technologies Corporation

Power of Attorney: The patent practitioners associated with Customer Number **54549**.

Domestic Priority data as claimed by applicant

Foreign Applications

Permission to Access - A proper **Authorization to Permit Access to Application by Participating Offices** (PTO/SB/39 or its equivalent) has been received by the USPTO.

If Required, Foreign Filing License Granted: 08/09/2006

The country code and number of your priority application, to be used for filing abroad under the Paris Convention, is US11/491,892

Projected Publication Date: 01/24/2008

Non-Publication Request: No

Early Publication Request: No

Title

Model based supportability process planning data set

Preliminary Class

345

PROTECTING YOUR INVENTION OUTSIDE THE UNITED STATES

Since the rights granted by a U.S. patent extend only throughout the territory of the United States and have no effect in a foreign country, an inventor who wishes patent protection in another country must apply for a patent in a specific country or in regional patent offices. Applicants may wish to consider the filing of an international application under the Patent Cooperation Treaty (PCT). An international (PCT) application generally has the same effect as a regular national patent application in each PCT-member country. The PCT process **simplifies** the filing of patent applications on the same invention in member countries, but **does not result** in a grant of "an international patent" and does not eliminate the need of applicants to file additional documents and fees in countries where patent protection is desired.

Almost every country has its own patent law, and a person desiring a patent in a particular country must make an application for patent in that country in accordance with its particular laws. Since the laws of many countries differ in various respects from the patent law of the United States, applicants are advised to seek guidance from specific foreign countries to ensure that patent rights are not lost prematurely.

Applicants also are advised that in the case of inventions made in the United States, the Director of the USPTO must issue a license before applicants can apply for a patent in a foreign country. The filing of a U.S. patent application serves as a request for a foreign filing license. The application's filing receipt contains further information and guidance as to the status of applicant's license for foreign filing.

Applicants may wish to consult the USPTO booklet, "General Information Concerning Patents" (specifically, the section entitled "Treaties and Foreign Patents") for more information on timeframes and deadlines for filing foreign patent applications. The guide is available either by contacting the USPTO Contact Center at 800-786-9199, or it can be viewed on the USPTO website at http://www.uspto.gov/web/offices/pac/doc/general/index.html.

For information on preventing theft of your intellectual property (patents, trademarks and copyrights), you may wish to consult the U.S. Government website, http://www.stopfakes.gov. Part of a Department of Commerce initiative, this website includes self-help "toolkits" giving innovators guidance on how to protect intellectual property in specific countries such as China, Korea and Mexico. For questions regarding patent enforcement issues, applicants may call the U.S. Government hotline at 1-866-999-HALT (1-866-999-4158).

LICENSE FOR FOREIGN FILING UNDER
Title 35, United States Code, Section 184
Title 37, Code of Federal Regulations, 5.11 & 5.15

GRANTED

The applicant has been granted a license under 35 U.S.C. 184, if the phrase "IF REQUIRED, FOREIGN FILING LICENSE GRANTED" followed by a date appears on this form. Such licenses are issued in all applications where the conditions for issuance of a license have been met, regardless of whether or not a license may be required as set forth in 37 CFR 5.15. The scope and limitations of this license are set forth in 37 CFR 5.15(a) unless an earlier license has been issued under 37 CFR 5.15(b). The license is subject to revocation upon written notification. The date indicated is the effective date of the license, unless an earlier license of similar scope has been granted

under 37 CFR 5.13 or 5.14.

This license is to be retained by the licensee and may be used at any time on or after the effective date thereof unless it is revoked. This license is automatically transferred to any related applications(s) filed under 37 CFR 1.53(d). This license is not retroactive.

The grant of a license does not in any way lessen the responsibility of a licensee for the security of the subject matter as imposed by any Government contract or the provisions of existing laws relating to espionage and the national security or the export of technical data. Licensees should apprise themselves of current regulations especially with respect to certain countries, of other agencies, particularly the Office of Defense Trade Controls, Department of State (with respect to Arms, Munitions and Implements of War (22 CFR 121-128)); the Bureau of Industry and Security, Department of Commerce (15 CFR parts 730-774); the Office of Foreign Assets Control, Department of Treasury (31 CFR Parts 500+) and the Department of Energy.

NOT GRANTED

No license under 35 U.S.C. 184 has been granted at this time, if the phrase "IF REQUIRED, FOREIGN FILING LICENSE GRANTED" DOES NOT appear on this form. Applicant may still petition for a license under 37 CFR 5.12, if a license is desired before the expiration of 6 months from the filing date of the application. If 6 months has lapsed from the filing date of this application and the licensee has not received any indication of a secrecy order under 35 U.S.C. 181, the licensee may foreign file the application pursuant to 37 CFR 5.15(b).

UNITED STATES PATENT AND TRADEMARK OFFICE

UNITED STATES DEPARTMENT OF COMMERCE
United States Patent and Trademark Office
Address: COMMISSIONER FOR PATENTS
P.O. Box 1450
Alexandria, Virginia 22313-1450
www.uspto.gov

APPLICATION NO.	FILING DATE	FIRST NAMED INVENTOR	ATTORNEY DOCKET NO.	CONFIRMATION NO.
11/491,908	07/25/2006	You Yoshioka	294243US2S	5856

7590 07/15/2008

OBLON, SPIVAK, MCCLELLAND MAIER & NEUSTADT, P.C.
1940 DUKE STREET
ALEXANDRIA, VA 22314

EXAMINER	
NGUYEN, HOA T	

ART UNIT	PAPER NUMBER
2627	

NOTIFICATION DATE	DELIVERY MODE
07/15/2008	ELECTRONIC

DECISION GRANTING PETITION UNDER 37 CFR 1.138(d)

The declaration of express abandonment is recognized

This is in response to the petition under 37 CFR 1.138(d), requesting for a refund of any previously paid search fee and excess claims fee in the above-identified application.

The petition is granted.

The express abandonment is recognized. Any previously paid search fee and excess claims fee are hereby refunded.

Telephone inquiries should be directed to the Office of Data Management at (571) 272-4200.

Patent Publication Branch
Office of Data Management

Notice of Abandonment	Application No.	Applicant(s)	
	11/491,908	YOSHIOKA ET AL.	
	Examiner	Art Unit	
	Hoa Nguyen	2627	

-- The MAILING DATE of this communication appears on the cover sheet with the correspondence address--

This application is abandoned in view of:

1. ☐ Applicant's failure to timely file a proper reply to the Office letter mailed on _____.
   (a) ☐ A reply was received on _____ (with a Certificate of Mailing or Transmission dated _____), which is after the expiration of the period for reply (including a total extension of time of _____ month(s)) which expired on _____.
   (b) ☐ A proposed reply was received on _____, but it does not constitute a proper reply under 37 CFR 1.113 (a) to the final rejection.
   (A proper reply under 37 CFR 1.113 to a final rejection consists only of: (1) a timely filed amendment which places the application in condition for allowance; (2) a timely filed Notice of Appeal (with appeal fee); or (3) a timely filed Request for Continued Examination (RCE) in compliance with 37 CFR 1.114).
   (c) ☐ A reply was received on _____ but it does not constitute a proper reply, or a bona fide attempt at a proper reply, to the non-final rejection. See 37 CFR 1.85(a) and 1.111. (See explanation in box 7 below).
   (d) ☐ No reply has been received.

2. ☐ Applicant's failure to timely pay the required issue fee and publication fee, if applicable, within the statutory period of three months from the mailing date of the Notice of Allowance (PTOL-85).
   (a) ☐ The issue fee and publication fee, if applicable, was received on _____ (with a Certificate of Mailing or Transmission dated _____), which is after the expiration of the statutory period for payment of the issue fee (and publication fee) set in the Notice of Allowance (PTOL-85).
   (b) ☐ The submitted fee of $_____ is insufficient. A balance of $_____ is due.
   The issue fee required by 37 CFR 1.18 is $_____. The publication fee, if required by 37 CFR 1.18(d), is $_____.
   (c) ☐ The issue fee and publication fee, if applicable, has not been received.

3. ☐ Applicant's failure to timely file corrected drawings as required by, and within the three-month period set in, the Notice of Allowability (PTO-37).
   (a) ☐ Proposed corrected drawings were received on _____ (with a Certificate of Mailing or Transmission dated _____), which is after the expiration of the period for reply.
   (b) ☐ No corrected drawings have been received.

4. ☒ The letter of express abandonment which is signed by the attorney or agent of record, the assignee of the entire interest, or all of the applicants.

5. ☐ The letter of express abandonment which is signed by an attorney or agent (acting in a representative capacity under 37 CFR 1.34(a)) upon the filing of a continuing application.

6. ☐ The decision by the Board of Patent Appeals and Interference rendered on _____ and because the period for seeking court review of the decision has expired and there are no allowed claims.

7. ☐ The reason(s) below:

/BETTY POWELL/
Non-Examiner

Petitions to revive under 37 CFR 1.137(a) or (b), or requests to withdraw the holding of abandonment under 37 CFR 1.181, should be promptly filed to minimize any negative effects on patent term.

UNITED STATES PATENT AND TRADEMARK OFFICE

UNITED STATES DEPARTMENT OF COMMERCE
United States Patent and Trademark Office
Address: COMMISSIONER FOR PATENTS
P.O. Box 1450
Alexandria, Virginia 22313-1450
www.uspto.gov

APPLICATION NO.	FILING DATE	FIRST NAMED INVENTOR	ATTORNEY DOCKET NO.	CONFIRMATION NO.
11/491,908	07/25/2006	You Yoshioka	294243US2S	5856

22850 7590 12/12/2008

OBLON, SPIVAK, MCCLELLAND MAIER & NEUSTADT, P.C.
1940 DUKE STREET
ALEXANDRIA, VA 22314

EXAMINER	
NGUYEN, HOA T	

ART UNIT	PAPER NUMBER
2627	

NOTIFICATION DATE	DELIVERY MODE
12/12/2008	ELECTRONIC

Please find below and/or attached an Office communication concerning this application or proceeding.

The time period for reply, if any, is set in the attached communication.

Notice of the Office communication was sent electronically on above-indicated "Notification Date" to the following e-mail address(es):

patentdocket@oblon.com
oblonpat@oblon.com
jgardner@oblon.com

UNITED STATES PATENT AND TRADEMARK OFFICE

Commissioner for Patents
United States Patent and Trademark Office
P.O. Box 1450
Alexandria, VA 22313-1450
www.uspto.gov

MAIL

JUN 17 2010

DIRECTOR'S OFFICE
TECHNOLOGY CENTER 2600

FITZPATRICK CELLA HARPER & SCINTO
1290 Avenue of the Americas
NEW YORK NY 10104-3800

In re Application of
MORITA, KENJI et al
Application No. 11/491,945
Filed: July 25, 2006
Attorney Docket No. 00862.135097.

DECISION ON REQUEST TO PARTICIPATE IN PATENT PROSECUTION HIGHWAY PROGRAM AND PETITION TO MAKE SPECIAL UNDER 37 CFR 1.102(d)

This is a decision on the request to participate in the Patent Prosecution Highway (PPH) program and the petition under 37 CFR 1.102(d), filed May 20, 2010, to make the above-identified application special.

The request and petition are **GRANTED**.

A grantable request to participate in the PPH program and petition to make special require:

(1) The U.S. application must validly claim priority under 35 U.S.C. 119(a) to one or more applications filed in the JPO;
(2) Applicant must submit a copy of the allowable/patentable claim(s) from the JPO application(s) along with an English translation thereof and a statement that the English translation is accurate;
(3) All the claims in the U.S. application must sufficiently correspond or be amended to sufficiently correspond to the allowable/patentable claim(s) in the JPO application(s);
(4) Examination of the U.S. application has not begun;
(5) Applicant must submit a copy of all the office actions from each of the JPO application(s) containing the allowable/patentable claim(s) along with an English translation thereof and a statement that the English translation is accurate;
(6) Applicant must submit an IDS listing the documents cited by the JPO examiner in the JPO office action along with copies of documents except U.S. patents or U.S. patent application publications; and
(7) The required petition fee under 37 CFR 1.17(h).

The request to participate in the PPH program and petition comply with the above requirements. Accordingly, the above-identified application has been accorded "special" status.

Telephone inquiries concerning this decision should be directed to Michael Horabik at 571-272-3068.

All other inquiries concerning the examination or status of the application should be directed to Patent Application Information Retrieval (PAIR) system.

The application is being forwarded to the examiner for action on the merits commensurate with this decision.

/Michael Horabik/

Michael Horabik
Quality Assurance Specialist
Technology Center 2600
Communications

UNITED STATES PATENT AND TRADEMARK OFFICE

UNITED STATES DEPARTMENT OF COMMERCE
United States Patent and Trademark Office
Address: COMMISSIONER FOR PATENTS
P.O. Box 1450
Alexandria, Virginia 22313-1450
www.uspto.gov

APPLICATION NO.	FILING DATE	FIRST NAMED INVENTOR	ATTORNEY DOCKET NO.	CONFIRMATION NO.
11/491,955	07/25/2006	Kurichiyath Sudheer	200501924-2	6151

7590 04/14/2008

HEWLETT PACKARD COMPANY
P O BOX 272400, 3404 E. HARMONY ROAD
INTELLECTUAL PROPERTY ADMINISTRATION
FORT COLLINS, CO 80527-2400

EXAMINER	
GIARDINO JR, MARK A	

ART UNIT	PAPER NUMBER
2185	

NOTIFICATION DATE	DELIVERY MODE
04/14/2008	ELECTRONIC

DECISION GRANTING PETITION UNDER 37 CFR 1.138(d)

The declaration of express abandonment is recognized

This is in response to the petition under 37 CFR 1.138(d), requesting for a refund of any previously paid search fee and excess claims fee in the above-identified application.

The petition is granted.

The express abandonment is recognized. Any previously paid search fee and excess claims fee are hereby refunded.

Telephone inquiries should be directed to the Office of Data Management at (571) 272-4200.

Nimi Farmer

Patent Publication Branch
Office of Data Management

Adjustment date: 04/15/2008 DTERRY
02/26/2006 FFANAETA 00000054 082025 11491955
02 FC:1111 300.00 CR

UNITED STATES PATENT AND TRADEMARK OFFICE

Commissioner for Patents
United States Patent and Trademark Office
P.O. Box 1450
Alexandria, VA 22313-1450
www.uspto.gov

CHIEN-HUI SU
P. O. BOX 70-121 TAICHUNG
TAICHUNG CITY 40899 TW TAIWAN

COPY MAILED

OCT 15 2008

OFFICE OF PETITIONS

In re Application of
Chih-Ching Hsieh
Application No. 11/492,026
Filed: July 25, 2006
Attorney Docket No: GFP-3741

ON PETITION

This is a decision on the petition under the unintentional provisions of 37 CFR 1.137(b), filed June 20, 2008, to revive the above-identified application.

The petition is **GRANTED**.

This application became abandoned for failure to timely pay the issue and publication fees on or before October 9, 2007, as required by the Notice of Allowance and Fee(s) Due, mailed July 9, 2007. The issue and publication fees were received on October 12, 2008. A Notice of Abandonment was mailed on November 2, 2007. On June 20, 2008, the present petition was filed, followed by a second petition under 37 CFR 1.137(b) on September 4, 2008.

The petition satisfies the requirements of 37 CFR 1.137(b) in that petitioner has supplied (1) the reply in the form of payment of the issue fee of $720 and the publication fee of $300, (2) the petition fee of $770; and (3) an adequate statement of unintentional delay.

It is noted that petitioner submitted a $770 petition fee, $1,000 for the issue and publication fees on September 4, 2008. Since these fees were previously paid, petitioner is entitled to a refund of the $1,770 submitted on September 4, 2008. Any request for refund must included a copy of this decision and be mailed to Mail Stop 16, Director of the U.S. Patent and Trademark Office, P. O. Box 1450, Alexandria, VA 22313-1450 or faxed to the Customer Service Help Desk at (571) 273-6500.

The application is being referred to the Office of Data Management to be processed into a patent.

Telephone inquires related to this decision should be directed to the undersigned at (571) 272-3204. Telephone inquiries related to processing as a patent should be directed to (571) 272-4200.

Sherry D. Brinkley
Petitions Examiner
Office of Petitions

UNITED STATES PATENT AND TRADEMARK OFFICE

UNITED STATES DEPARTMENT OF COMMERCE
United States Patent and Trademark Office
Address: COMMISSIONER FOR PATENTS
P.O. Box 1450
Alexandria, Virginia 22313-1450
www.uspto.gov

BACON & THOMAS, PLLC
625 SLATERS LANE
FOURTH FLOOR
ALEXANDRIA, VA 22314-1176

Mail Date: 04/21/2010

Applicant	: Chiu-Chih Chiang	: DECISION ON REQUEST FOR
Patent Number	: 7589393	: RECALCULATION of PATENT
Issue Date	: 09/15/2009	: TERM ADJUSTMENT IN VIEW
Appliction No	: 11/492,039	: OF WYETH AND NOTICE OF INTENT TO
Filed	: 07/25/2006	: ISSUE CERTIFICATE OF CORRECTION
		:

The Request for Recalculation is **GRANTED** to the extent indicated.

The patent term adjustment has been determined to be **298** days. The USPTO will *sua sponte* issue a certificate of correction reflecting the amount of PTA days determined by the recalculation.

Prior to the issuance of the certificate of correction, the USPTO will afford patentee an opportunity to be heard and request reconsideration. Accordingly, patentee has **one month or thirty (30) days**, whichever is longer, to file a request for reconsideration of this patent term adjustment calculation. See 35 U.S.C. 154(b)(3)(B)(ii) and 37 CFR 1.322(a)(4). No extensions of time will be granted under 37 CFR 1.136.

Patentee should use document code PET.OP if electronically filing a request for reconsideration of this patent term adjustment calculation. The patentee must also include the information required by 37 CFR 1.705(b)(2) and the fee required by 37 CFR 1.18(e). If patentee does not file a timely request for reconsideration of this patent term adjustment calculation including the information required by 37 CFR 1.705(b)(2) and the fee required by 37 CFR 1.18(e), the USPTO will issue a certificate of correction reflecting the PTA determination noted above.

Patentee should be aware that in order to preserve the right to review in the United States District Court for the District of Columbia of the USPTO patent term adjustment determination, patentee must ensure that he or she also take the steps required under 35 U.S.C. 154(b)(4)(A) in a timely manner. Nothing in the request for recalculation should be construed as providing an alternative time frame for commencing a civil action under 35 U.S.C. 154(b)(4)(A).

Any questions concerning this decision should be directed to the Office of Patent Legal Administration at 571-272-7702.

UNITED STATES PATENT AND TRADEMARK OFFICE

UNITED STATES DEPARTMENT OF COMMERCE
United States Patent and Trademark Office
Address: COMMISSIONER FOR PATENTS
P.O. Box 1450
Alexandria, Virginia 22313-1450
www.uspto.gov

STEIN MCEWEN, LLP
1400 EYE STREET, NW
SUITE 300
WASHINGTON, DC 20005

Mail Date: 04/20/2010

Applicant	: Hyuk-Jae Chang	: DECISION ON REQUEST FOR
Patent Number	: 7603070	: RECALCULATION of PATENT
Issue Date	: 10/13/2009	: TERM ADJUSTMENT IN VIEW
Appliction No	: 11/492,052	: OF WYETH AND NOTICE OF INTENT TO
Filed	: 07/25/2006	: ISSUE CERTIFICATE OF CORRECTION
		:

The Request for Recalculation is **GRANTED** to the extent indicated.

The patent term adjustment has been determined to be **521** days. The USPTO will *sua sponte* issue a certificate of correction reflecting the amount of PTA days determined by the recalculation.

Prior to the issuance of the certificate of correction, the USPTO will afford patentee an opportunity to be heard and request reconsideration. Accordingly, patentee has **one month or thirty (30) days**, whichever is longer, to file a request for reconsideration of this patent term adjustment calculation. See 35 U.S.C. 154(b)(3)(B)(ii) and 37 CFR 1.322(a)(4). No extensions of time will be granted under 37 CFR 1.136.

Patentee should use document code PET.OP if electronically filing a request for reconsideration of this patent term adjustment calculation. The patentee must also include the information required by 37 CFR 1.705(b)(2) and the fee required by 37 CFR 1.18(e). If patentee does not file a timely request for reconsideration of this patent term adjustment calculation including the information required by 37 CFR 1.705(b)(2) and the fee required by 37 CFR 1.18(e), the USPTO will issue a certificate of correction reflecting the PTA determination noted above.

Patentee should be aware that in order to preserve the right to review in the United States District Court for the District of Columbia of the USPTO patent term adjustment determination, patentee must ensure that he or she also take the steps required under 35 U.S.C. 154(b)(4)(A) in a timely manner. Nothing in the request for recalculation should be construed as providing an alternative time frame for commencing a civil action under 35 U.S.C. 154(b)(4)(A).

Any questions concerning this decision should be directed to the Office of Patent Legal Administration at 571-272-7702.

UNITED STATES PATENT AND TRADEMARK OFFICE

UNITED STATES DEPARTMENT OF COMMERCE
United States Patent and Trademark Office
Address: COMMISSIONER FOR PATENTS
P.O. Box 1450
Alexandria, Virginia 22313-1450
www.uspto.gov

CROWELL & MORING LLP
INTELLECTUAL PROPERTY GROUP
P.O. BOX 14300
WASHINGTON, DC 20044-4300

Mail Date: 05/21/2010

Applicant	: Tadatsugu Udono	: DECISION ON REQUEST FOR
Patent Number	: 7617673	: RECALCULATION of PATENT
Issue Date	: 11/17/2009	: TERM ADJUSTMENT IN VIEW
Application No	: 11/492,061	: OF WYETH AND NOTICE OF INTENT TO
Filed	: 07/25/2006	: ISSUE CERTIFICATE OF CORRECTION
		:

The Request for Recalculation is **GRANTED** to the extent indicated.

The patent term adjustment has been determined to be **475** days. The USPTO will *sua sponte* issue a certificate of correction reflecting the amount of PTA days determined by the recalculation.

Prior to the issuance of the certificate of correction, the USPTO will afford patentee an opportunity to be heard and request reconsideration. Accordingly, patentee has **one month or thirty (30) days**, whichever is longer, to file a request for reconsideration of this patent term adjustment calculation. See 35 U.S.C. 154(b)(3)(B)(ii) and 37 CFR 1.322(a)(4). No extensions of time will be granted under 37 CFR 1.136.

Patentee should use document code PET.OP if electronically filing a request for reconsideration of this patent term adjustment calculation. The patentee must also include the information required by 37 CFR 1.705(b)(2) and the fee required by 37 CFR 1.18(e). If patentee does not file a timely request for reconsideration of this patent term adjustment calculation including the information required by 37 CFR 1.705(b)(2) and the fee required by 37 CFR 1.18(e), the USPTO will issue a certificate of correction reflecting the PTA determination noted above.

Patentee should be aware that in order to preserve the right to review in the United States District Court for the District of Columbia of the USPTO patent term adjustment determination, patentee must ensure that he or she also take the steps required under 35 U.S.C. 154(b)(4)(A) in a timely manner. Nothing in the request for recalculation should be construed as providing an alternative time frame for commencing a civil action under 35 U.S.C. 154(b)(4)(A).

Any questions concerning this decision should be directed to the Office of Patent Legal Administration at 571-272-7702.

UNITED STATES PATENT AND TRADEMARK OFFICE

UNITED STATES DEPARTMENT OF COMMERCE
United States Patent and Trademark Office
Address: COMMISSIONER FOR PATENTS
P.O. Box 1450
Alexandria, Virginia 22313-1450
www.uspto.gov

APPLICATION NO.	FILING DATE	FIRST NAMED INVENTOR	ATTORNEY DOCKET NO.	CONFIRMATION NO.
11/492,065	07/25/2006	Shinichi Koyamatsu	5260-005-US01	6367

7590 09/09/2008

HANIFY & KING PROFESSIONAL CORPORATION
1875 K STREET, NW
SUITE 707
WASHINGTON, DC 20006

EXAMINER	
BOST, DWAYNE D	

ART UNIT	PAPER NUMBER
2617	

MAIL DATE	DELIVERY MODE
09/09/2008	PAPER

DECISION GRANTING PETITION UNDER 37 CFR 1.138(d)

The declaration of express abandonment is recognized

This is in response to the petition under 37 CFR 1.138(d), requesting for a refund of any previously paid search fee and excess claims fee in the above-identified application.

The petition is granted.

The express abandonment is recognized. Any previously paid search fee and excess claims fee are hereby refunded.

Telephone inquiries should be directed to the Office of Data Management at (571) 272-4200.

Betty Powell

Patent Publication Branch
Office of Data Management

Adjustment date: 09/10/2008 BPOWELL
07726/2006 FFANAEIA 00000120 195127 11492065
02 FC:1111 500.00 CR

Refund Ref:
09/10/2008 0030060915

Credit Card Refund Total: $500.00

Am Exp..: XXXXXXXXXXX2007

UNITED STATES PATENT AND TRADEMARK OFFICE

Commissioner for Patents
United States Patent and Trademark Office
P.O. Box 1450
Alexandria, VA 22313-1450
www.uspto.gov

STERNE KESSLER GOLDSTEIN & FOX P.L.L.C.
1100 NEW YORK AVENUE, N.W.
WASHINGTON, DC 20005

COPY MAILED

NOV 21 2007

OFFICE OF PETITIONS

In re Application of :
Roberto B. Wiener :
Application No. 11/492,067 :
Filed: July 25, 2006 :
Attorney Docket No. 1857.3130001

ON PETITION

This is a decision on the petition, filed November 19, 2007 under 37 CFR 1.313(c)(2) to withdraw the above-identified application from issue after payment of the issue fee.

The petition is **GRANTED**.

The above-identified application is withdrawn from issue for consideration of a submission under 37 CFR 1.114 (request for continued examination). See 37 CFR 1.313(c)(2).

Petitioner is advised that the issue fee paid on October 25, 2007 in the above-identified application cannot be refunded. If, however, the above-identified application is again allowed, petitioner may request that it be applied towards the issue fee required by the new Notice of Allowance.[1]

Telephone inquiries should be directed to Irvin Dingle at (571) 272-3210.

This matter is being referred to Technology Center AU 2873 for processing of the request for continued examination under 37 CFR 1.114 and for consideration of the concurrently filed Information Disclosure Statement.

Irvin Dingle
Petitions Examiner
Office of Petitions

[1] The request to apply the issue fee to the new Notice may be satisfied by completing and returning the new Issue Fee Transmittal Form PTOL-85(b), which includes the following language thereon: Commissioner for Patents is requested to apply the Issue Fee and Publication Fee (if any) or re-apply any previously paid issue fee to the application identified above. Petitioner is advised that, whether a fee is indicated as being due or not, the Issue Fee Transmittal Form **must** be completed and timely submitted to avoid abandonment. Note the language in bold text on the first page of the Notice of Allowance and Fee(s) Due (PTOL-85).

UNITED STATES PATENT AND TRADEMARK OFFICE

Commissioner for Patents
United States Patent and Trademark Office
P.O. Box 1450
Alexandria, VA 22313-1450
www.uspto.gov

WEI TE CHUNG
FOXCONN INTERNATIONAL, INC.
1650 MEMOREX DRIVE
SANTA CLARA CA 95050

COPY MAILED

SEP 05 2008

OFFICE OF PETITIONS

In re Application of :
Zhang :
Application No. 11/492,148 : DECISION
Filed: 24 July, 2006 :
Attorney Docket No. (None) :

This is a decision on the petitions, filed on 24 July, 2008, and considered as a petition under 37 C.F.R. §1.181 (no fee) requesting withdrawal of the holding of abandonment in the above-identified application.

The petition under 37 C.F.R. §1.181 is **DISMISSED**.

Any request for reconsideration of this decision should be filed **within two (2) months** from the mail date of this decision. *Note* 37 C.F.R. §1.181(f). The request for reconsideration should include a cover letter and be entitled as a "Renewed Petition under 37 C.F.R. §1.181 to Withdraw the Holding of Abandonment."

Alternatively, Petitioner may file a "Petition to Revive an Application under 37 C.F.R. §1.137(b) as Having Been Abandoned Due to Unintentional Delay."

Public Law 97-247, § 3, 96 Stat. 317 (1982), which revised patent and trademark fees, amended 35 U.S.C. § 41(a)(7) to provide for the revival of an "unintentionally" abandoned application without a showing that the delay in prosecution or in late payment of the issue fee was "unavoidable." This amendment to 35 U.S.C. § 41(a)(7) has been implemented in 37 C.F.R. §1.137(b).

A petition alleging "unintentional" delay under 37 C.F.R. §1.137(b) must be accompanied by the petition fee (unless previously paid), and Petitioner always should refer to the Office website (http://www.uspto.gov/main/howtofees.htm) to ensure submission of the proper fees. (A specific fee is not stated here because fee amounts change and there is no way to know when Petitioner will submit materials for filing.))

This is **not** a final agency action within the meaning of 5 U.S.C. § 704.

As to the Request to Withdraw
the Holding of Abandonment

Petitioner's attention always is drawn to the guidance in the Commentary at MPEP §711.03(c).[1]

---

[1] The Commentary at MPEP §711.03(c) provides in pertinent part:

*****

I. PETITION TO WITHDRAW HOLDING OF ABANDONMENT

A petition to revive an abandoned application (discussed below) should not be confused with a petition from an examiner's holding of abandonment. Where an applicant contends that the application is not in fact abandoned (e.g., there is disagreement as to the sufficiency of the reply, or as to controlling dates), a petition under 37 C.F.R. 1.181(a) requesting withdrawal of the holding of abandonment is the appropriate course of action, and such petition does not require a fee. Where there is no dispute as to whether an application is abandoned (e.g., the applicant's contentions merely involve the cause of abandonment), a petition under 37 C.F.R. 1.137 (accompanied by the appropriate petition fee) is necessary to revive the abandoned application.

Two additional procedures are available for reviving an application that has become abandoned due to a failure to reply to an Office Action: (1) a petition under 37 C.F.R. 1.137(a) based on unavoidable delay; and (2) a petition under 37 C.F.R. 1.137(b) based on unintentional delay.

A. Petition To Withdraw Holding of Abandonment Based on Failure To Receive Office Action

In *Delgar v. Schulyer*, 172 USPQ 513 (D.D.C. 1971), the court decided that the Office should mail a new Notice of Allowance in view of the evidence presented in support of the contention that the applicant's representative did not receive the original Notice of Allowance. Under the reasoning of *Delgar*, an allegation that an Office action was never received may be considered in a petition to withdraw the holding of abandonment. If adequately supported, the Office may grant the petition to withdraw the holding of abandonment and remail the Office action. That is, the reasoning of *Delgar* is applicable regardless of whether an application is held abandoned for failure to timely pay the issue fee (35 U.S.C. 151) or for failure to prosecute (35 U.S.C. 133).

To minimize costs and burdens to practitioners and the Office, the Office has modified the showing required to establish nonreceipt of an Office action. The showing required to establish nonreceipt of an Office communication must include a statement from the practitioner **>describing the system used for recording an Office action received at the correspondence address of record with the USPTO. The statement should establish that the docketing system is sufficiently reliable. It is expected that the record would include, but not be limited to, the application number, attorney docket number, the mail date of the Office action and the due date for the response.

Practitioner must state that the Office action was not received at the correspondence address of record, and that a search of the practitioner's record(s), including any file jacket or the equivalent, and the application contents, indicates that the Office action was not received. A copy of the record(s) used by the practitioner where the non-received Office action would have been entered had it been received is required.

A copy of the practitioner's record(s) required to show non-receipt of the Office action should include the master docket for the firm. That is, if a three month period for reply was set in the nonreceived Office action, a copy of the master docket report showing all replies docketed for a date three months from the mail date of the nonreceived Office action must be submitted as documentary proof of nonreceipt of the Office action. If no such master docket exists, the practitioner should so state and provide other evidence such as, but not limited to, the following: the application file jacket; incoming mail log; calendar; reminder system; or the individual docket record for the application in question.<

The showing outlined above may not be sufficient if there are circumstances that point to a conclusion that the Office action may have been lost after receipt rather than a conclusion that the Office action was lost in the mail (e.g., if the practitioner has a history of not receiving Office actions).

Evidence of nonreceipt of an Office communication or action (e.g., Notice of Abandonment or an advisory action) other than that action to which reply was required to avoid abandonment would not warrant withdrawal of the holding of abandonment. Abandonment takes place by operation of law for failure to reply to an Office action or timely pay the issue fee, not by operation of the mailing of a Notice of Abandonment. See *Lorenz v. Finkl*, 333 F.2d 885, 889-90, 142 USPQ 26, 29-30 (CCPA 1964); *Krahn v. Commissioner*, 15 USPQ2d 1823, 1824 (E.D. Va 1990); *In re Application of Fischer*, 6 USPQ2d 1573, 1574 (Comm'r Pat. 1988).

A proper showing (for relief under 37 C.F.R. §1.181):

- (as to non-receipt) requires at the very minimum: a statement from practitioner stating that the Office action was not received by the practitioner; a statement from the practitioner attesting to the fact that a search of the file jacket and docket records for the application indicates that the Office action was not received with a copy of those docket records; and a brief statement of the calendaring process and a copy of the due-date (calendar) docket record(s) where the nonreceived Office action would have been scheduled for reply had it been received must be attached to and referenced in the practitioner's statement; alternatively,

- (for a showing of timely and proper reply) requires a statement from practitioner stating that the reply was timely submitted by the practitioner; and copies of all papers submitted as and/or in support of that reply, with/and a copy of the date-stamped receipt card, Office FAX receipt acknowledgement (not simply Petitioner's FAX transmittal), or EFS

B. Petition To Withdraw Holding of Abandonment Based on Evidence That a Reply Was Timely Mailed or Filed

37 C.F.R. 1.10(c) through 1.10(e) and 1.10(g) set forth procedures for petitioning the Director of the USPTO to accord a filing date to correspondence as of the date of deposit of the correspondence as "Express Mail." A petition to withdraw the holding of abandonment relying upon a timely reply placed in "Express Mail" must include an appropriate petition under 37 C.F.R. 1.10(c), (d), (e), or (g) (see MPEP § 513). When a paper is shown to have been mailed to the Office using the "Express Mail" procedures, the paper must be entered in PALM with the "Express Mail" date.

Similarly, applicants may establish that a reply was filed with a postcard receipt that properly identifies the reply and provides *prima facie* evidence that the reply was timely filed. See MPEP § 503. For example, if the application has been held abandoned for failure to file a reply to a first Office action, and applicant has a postcard receipt showing that an amendment was timely filed in response to the Office action, then the holding of abandonment should be withdrawn upon the filing of a petition to withdraw the holding of abandonment. When the reply is shown to have been timely filed based on a postcard receipt, the reply must be entered into PALM using the date of receipt of the reply as shown on the post card receipt.

Where a certificate of mailing under 37 C.F.R. 1.8, but not a postcard receipt, is relied upon in a petition to withdraw the holding of abandonment, see 37 C.F.R. 1.8(b) and MPEP § 512. As stated in 37 C.F.R. 1.8(b)(3) the statement that attests to the previous timely mailing or transmission of the correspondence must be on a personal knowledge basis, or to the satisfaction of the Director of the USPTO. If the statement attesting to the previous timely mailing is not made by the person who signed the Certificate of Mailing (i.e., there is no personal knowledge basis), then the statement attesting to the previous timely mailing should include evidence that supports the conclusion that the correspondence was actually mailed (e.g., copies of a mailing log establishing that correspondence was mailed for that application). When the correspondence is shown to have been timely filed based on a certificate of mailing, the correspondence is entered into PALM with the actual date of receipt (i.e., the date that the duplicate copy of the papers was filed with the statement under 37 C.F.R. 1.8).

37 C.F.R. 1.8(b) also permits applicant to notify the Office of a previous mailing or transmission of correspondence and submit a statement under 37 C.F.R. 1.8(b)(3) accompanied by a duplicate copy of the correspondence when a reasonable amount of time (e.g., more than one month) has elapsed from the time of mailing or transmitting of the correspondence. Applicant does not have to wait until the application becomes abandoned before notifying the Office of the previous mailing or transmission of the correspondence. Applicant should check the private Patent Application Information Retrieval (PAIR) system for the status of the correspondence before notifying the Office. See MPEP §512.

C. Treatment of Untimely Petition To Withdraw Holding of Abandonment

37 C.F.R. 1.181(f) provides that, *inter alia*, except as otherwise provided, any petition not filed within 2 months from the action complained of may be dismissed as untimely. Therefore, any petition (under 37 C.F.R. 1.181) to withdraw the holding of abandonment not filed within 2 months of the mail date of a notice of abandonment (the action complained of) may be dismissed as untimely. 37 C.F.R. 1.181(f). Rather than dismiss an untimely petition to withdraw the holding of abandonment under 37 C.F.R. 1.181(f), the Office may require a terminal disclaimer as a condition of granting an untimely petition to withdraw the holding of abandonment.

*****

receipt acknowledgment from the Office, along with practitioner's attestation as to the correctness/completeness of his/her records.

The showing(s) must include that of the person(s) with first-hand knowledge and an acknowledgment by the Petitioner that he/she has reviewed that information in compliance with his/her duty of candor to the Office. And under the rule (37 C.F.R. §1.181) Petitioner must seek relief within two months of the act complained of.

Petitioner has failed to support the petition and averments of search and non-discovery with, *inter alia*, the documentary presentations of the reply due-date docket for the dates on which the papers would have been filed.

BACKGROUND

The record reflects as follows:

Petitioner failed to reply timely and properly Notice of Additional Fees Due mailed on 16 November, 2007, with reply due absent extension of time on or before Monday, 17 December, 2007.

The application went abandoned by operation of law after midnight 16 December, 2007.

The Office mailed the Notice of Abandonment on 23 May, 2008.

On 24 July, 2008, Petitioner filed the instant petitions, asserting, *inter alia*, that the Notice of Additional Fees Due was not received, and avers a search of the file and non-discovery, but has failed to support the petition and averments of search and non-discovery with the documentary presentations of the reply due-date docket for the date on which the papers would have been filed. Petitioner also refers inappropriately to other applications not under consideration here (each application is a separate file: 37 C.F.R. §1.4(b)), as well as to telephone discussions that are not the basis for any action or inaction by Petitioner. (37 C.F.R. §1.2.)

Moreover, because Petitioner appears to have waited until the last day to respond and further to submit the instant petition after midnight at the Office, it is noted that Petitioner's reply to the Notice of Abandonment is late under the rule (37 C.F.R. §1.181), and Petitioner should refer to the guidance set forth in the Commentary at MPEP §711.03(c).[2]

---

[2] The guidance set forth in the Commentary at MPEP §711.03(c) provides in pertinent part:

> ***C. Treatment of Untimely Petition To Withdraw Holding of Abandonment***
>
> 37 C.F.R. 1.181(f) provides that, *inter alia*, except as otherwise provided, any petition not filed within 2 months from the action complained of may be dismissed as untimely. Therefore, any petition (under 37 C.F.R. §1.181) to withdraw the holding of abandonment not filed within 2 months of the mail date of a notice of abandonment (the action complained of) may be dismissed as untimely. 37 C.F.R. §1.181(f).

Out of an abundance of caution, Petitioners always are reminded that the filing of a petition under 37 C.F.R. §1.181 does not toll any periods that may be running any action by the Office and a petition seeking relief under the regulation must be filed within two (2) months of the act complained of (see: 37 C.F.R. §1.181(f)), and that those registered to practice and all others who make representations before the Office are reminded to inquire into the underlying facts of representations made to the Office and support averments with the appropriate documentation– since all owe to the Office the continuing duty to disclose.[3]

The availability of applications and application papers online to applicants/practitioners who diligently associate their Customer Number with the respective application(s) now provides an applicant/practitioner on-demand information as to events/transactions in an application.

STATUTES, REGULATIONS

Congress has authorized the Commissioner to "revive an application if the delay is shown to the satisfaction of the Commissioner to have been "unavoidable." 35 U.S.C. §133 (1994).

The regulations at 37 C.F.R. §1.137(a) and (b) set forth the requirements for a Petitioner to revive a previously unavoidably or unintentionally, respectively, abandoned application.[4,5]

> Rather than dismiss an untimely petition to withdraw the holding of abandonment under 37 C.F.R. §1.181(f), the Office may require a terminal disclaimer as a condition of granting an untimely petition to withdraw the holding of abandonment.
>
> ***
>
> **3.Utility and Plant Applications Filed on or After May 29, 2000**
>
> In utility and plant applications filed on or after May 29, 2000, a terminal disclaimer should not be required as a condition of granting an untimely petition to withdraw the holding of abandonment. This is because any patent term adjustment is automatically reduced under the provisions of 37 C.F.R. §1.704(c)(4) in applications subject to the patent term adjustment provisions of the American Inventors Protection Act of 1999 (AIPA) if a petition to withdraw a holding of abandonment is not filed within two months from the mailing date of the notice of abandonment, and if applicant does not receive the notice of abandonment, any patent term adjustment is reduced under the provisions of 37 C.F.R. §1.704(a) by a period equal to the period of time during which the applicant "failed to engage in reasonable efforts to conclude prosecution" (processing or examination) of the application.
>
> Where the record indicates that the applicant intentionally delayed the filing of a petition to withdraw the holding of abandonment, the Office may simply dismiss the petition as untimely (37 C.F.R. §1.181(f)) solely on the basis of such intentional delay in taking action in the application without further addressing the merits of the petition. Obviously, intentional delay in seeking the revival of an abandoned application precludes relief under 37 C.F.R. §1.137(a) or (b) (***).
>
> ***

[3] See supplement of 17 June, 1999. The Patent and Trademark Office is relying on Petitioner's duty of candor and good faith and accepting a statement made by Petitioner. See Changes to Patent Practice and Procedure, 62 Fed. Reg. at 53160 and 53178, 1203 Off. Gaz. Pat. Office at 88 and 103 (responses to comments 64 and 109)(applicant obligated under 37 C.F.R. §10.18 to inquire into the underlying facts and circumstances when providing statements to the Patent and Trademark Office).

[4] See: Changes to Patent Practice and Procedure; Final Rule Notice, 62 Fed. Reg. at 53158-59 (October 10, 1997), 1203 Off. Gaz. Pat. Office at 86-87 (October 21, 1997).

[5] The language of 35 U.S.C. §133 and 37 C.F.R. §1.137(a) is clear, unambiguous, and without qualification: the delay in tendering the reply to the outstanding Office action, as well as filing the first petition seeking revival, must have been unavoidable for the reply now to be accepted on petition. (Therefore, by example, an unavoidable delay in the payment of the Filing Fee might occur if a reply is shipped by the US Postal

Allegations as to the Request to
Withdraw the Holding of Abandonment

The courts have determined the construct for properly supporting a petition seeking withdrawal of a holding of abandonment.[6] (See, also, the commentary at MPEP §711.03(c)(I)(A) and (B).)

Further, the regulation requires relief be sought within two (2) months of the act complained of.

The petition fails to satisfy the above-stated requirements in that Petitioner failed make the showing required.

(*See* MPEP § 711.03(c) under subheading "Petition to Withdraw Holding of Abandonment Based on Failure to Receive Office Action," alternative "A Reply Was Timely Filed"; see also: "Withdrawing the Holding of Abandonment When Office Actions Are Not Received," 1156 Official Gazette 53 (November 16, 1993).)

CONCLUSION

Accordingly, the petition under 37 C.F.R. §1.181 is **dismissed**.

ALTERNATIVE VENUE

Petitioner may file a petition under 37 C.F.R. §1.137(b) and aver unintentional delay. (See: http://www.uspto.gov/web/offices/pac/mpep/documents/0700_711_03_c.htm#sect711.03c)

A petition to revive on the grounds of unintentional delay must be filed promptly and such petition must be accompanied by the reply, the petition fee, a statement that "the entire delay in filing the required reply from the due date for the reply until the filing of a grantable petition was unintentional" (the statement is in the form available online), and a terminal disclaimer and fee where appropriate.

Further correspondence with respect to this matter should be addressed as follows:

Service, but due to catastrophic accident, the delivery is not made.) Delays in responding properly raise the question whether delays are unavoidable. Where there is a question whether the delay was unavoidable, Petitioners must meet the burden of establishing that the delay was unavoidable within the meaning of 35 U.S.C. §133 and 37 C.F.R. §1.137(a) And the Petitioner must be diligent in attending to the matter. Failure to do so does not constitute the care required under Pratt, and so cannot satisfy the test for diligence and due care. (By contrast, unintentional delays are those that do not satisfy the very strict statutory and regulatory requirements of unavoidable delay, and also, by definition, are not intentional.))

[6] See: Delgar v. Schulyer, 172 USPQ 513 (D.D.C. 1971).

By Mail: Mail Stop PETITION
Commissioner for Patents
P. O. Box 1450
Alexandria, VA 22313-1450

By hand: U. S. Patent and Trademark Office
Customer Service Window, Mail Stop Petitions
Randolph Building
401 Dulany Street
Alexandria, VA 22314

By facsimile: **(571) 273-8300**
Attn: Office of Petitions

While telephone inquiries regarding this decision may be directed to the undersigned at (571) 272-3214, it is noted that all practice before the Office is in writing (see: 37 C.F.R. §1.2[7]) and the proper authority for action on any matter in this regard are the statutes (35 U.S.C.), regulations (37 C.F.R.) and the commentary on policy (MPEP). Therefore, no telephone discussion may be controlling or considered authority for Petitioner's action(s).

/John J. Gillon, Jr./
John J. Gillon, Jr.
Senior Attorney
Office of Petitions

[7] The regulations at 37 C.F.R. §1.2 provide:

§1.2 Business to be transacted in writing.

All business with the Patent and Trademark Office should be transacted in writing. The personal attendance of applicants or their attorneys or agents at the Patent and Trademark Office is unnecessary. The action of the Patent and Trademark Office will be based exclusively on the written record in the Office. No attention will be paid to any alleged oral promise, stipulation, or understanding in relation to which there is disagreement or doubt.

UNITED STATES PATENT AND TRADEMARK OFFICE

UNITED STATES DEPARTMENT OF COMMERCE
U.S. Patent and Trademark Office
Address: COMMISSIONER FOR PATENTS
P.O. Box 1450
Alexandria, Virginia 22313-1450
www.uspto.gov

25859 e 11/16/2007

WEI TE CHUNG
FOXCONN INTERNATIONAL, INC.
1650 MEMOREX DRIVE
SANTA CLARA, CA 95050

Paper No.

Application No.:	**11/492,148**	**Date Mailed:**	**11/16/2007**
First Named Inventor:	Zhang, George, (HuanYi)	Examiner:	LEON, EDWIN A
Attorney Docket No.:		Art Unit:	2833
Confirmation No.:	5273	Filing Date:	07/24/2006

Please find attached an Office communication concerning this application or proceeding.

Commissioner for Patents

PTO-90c (Rev.08-06)

NOTICE REQUIRING EXCESS CLAIMS FEES	Application No. 11/492,148	Applicant(s) ZHANG, GEORGE (HUANYI)	
		Art Unit 1600	

The excess claim(s) filed on is not accompanied by the appropriate payment of excess claims fees set forth in 37 CFR 1.16(h)-(j) or 1.492(d)-(f). Excess claims fees are required for each claim in independent form in excess of three (§ 1.16(h)), each claim (whether dependent or independent) in excess of twenty (note that § 1.75(c) indicates how multiple dependent claims are considered for fee calculation purposes) (§ 1.16(i)), and each application that contains a multiple dependent claim (§ 1.16(j)).

Since the application is not under a final rejection, applicant is given a time period of **ONE (1) MONTH or THIRTY (30) DAYS** from the mailing date of this notice, whichever is longer, to submit either: (1) the fee payment of $, or (2) an amendment in compliance with 37 CFR 1.121 that cancels the excess claim(s), in order to avoid ABANDONMENT. Extensions of this time period may be granted under 37 CFR 1.136, unless the excess claim(s) was presented in a preliminary amendment.

☐ 1 The funds in Deposit Account No. are insufficient to cover the entire fee due. The balance is due within the time period set forth in this notice. See note below regarding the appropriate service charge.

☐ 2. The Credit Card payment to cover the entire fee due to Account **(Card type + last 4 digits ONLY)** was refused. The balance is due within the time period set forth in this notice. See note below regarding the appropriate service charge.

☐ 3. The amendment that includes the excess claim(s) has not been entered, since applicant has failed to remit (or authorize charge to a Deposit Account or Credit Card) the fee as indicated on the attached Patent Application Fee Determination Record (PTO/SB/06). Remittance or authorization is due within the time period set forth in this notice.

☐ 4. The fee submitted in this application is insufficient. A balance of $ is due for presentation of excess claims (37 CFR 1.16(h)-(j) or 1.492(d)-(f)).

☐ 5. Other.

Explanation (*Provide specific details of the required correction in order to assist the applicant. Indicate whether a service charge has been added to the fee due*):

THE AMOUNT OF THE FEE(S) DUE IS SUBJECT TO CHANGE, GENERALLY ON OCTOBER 1 OF EACH YEAR (37 CFR 1.16, 1.21 & 1.492). THE **AMOUNT OF THE FEE(S) DUE IS DETERMINED AS OF THE DATE A COMPLETE REPLY WITH THE APPROPRIATE FEE(S) IS RECEIVED BY THE OFFICE** (37 CFR 1.8 & 1.10). BECAUSE THE AMOUNT DUE IS SUBJECT TO CHANGE, IT IS RECOMMENDED THAT APPLICANT CHECK THE CURRENT FEE SCHEDULE WHICH IS AVAILABLE ON THE USPTO'S WEBSITE AT: ***http://www.uspto.gov/web/offices/ac/qs/ope/fees.htm***

Service Charges: There is a $50 service charge for processing each payment refused (including a check returned "unpaid") or charged back by a financial institution (37 CFR 1.21(m)). There is a $25.00 service charge for each month when the balance of a deposit account is below $1000 at the end of the month (37 CFR 1.21(b)(2)).

Technical Support Staff (TSS): Henrietta K. Dendy Phone Number: 5712720517

Note to TSS: Please do NOT use this notice if the application is under a final rejection.

UNITED STATES PATENT AND TRADEMARK OFFICE

Commissioner for Patents
United States Patent and Trademark Office
P.O. Box 1450
Alexandria, VA 22313-1450
www.uspto.gov

WEI TE CHUNG
FOXCONN INTERNATIONAL, INC.
1650 MEMOREX DRIVE
SANTA CLARA CA 95050

COPY MAILED

DEC 1 5 2008

OFFICE OF PETITIONS

In re Application of :
Zhang :
Application No. 11/492,148 : DECISION
Filed: 24 July, 2006 :
Attorney Docket No. (None) :

This is a decision on the petitions, filed on 5 November, 2008, and considered as a petition under 37 C.F.R. §1.181 (no fee) requesting withdrawal of the holding of abandonment in the above-identified application.

The petition under 37 C.F.R. §1.181 is **DISMISSED**.

Any request for reconsideration of this decision should be filed **within two (2) months** from the mail date of this decision. *Note* 37 C.F.R. §1.181(f). The request for reconsideration should include a cover letter and be entitled as a "Renewed Petition under 37 C.F.R. §1.181 to Withdraw the Holding of Abandonment."

This is **not** a final agency action within the meaning of 5 U.S.C. §704.

As to the Request to Withdraw
the Holding of Abandonment

Petitioner is directed to the Commentary at MPEP §711.03(c)(I) for guidance as to the proper showing and timeliness and showing requirements for relief under 37 C.F.R. §1.181.

Petitioner appears not to comply with the guidance in the Commentary at MPEP §711.03(c)(I)—as discussed below, Petitioner has not satisfied the showing (statement/showing and documentary) requirements set forth there. Petitioner may find it beneficial to review that

material and move step-wise through that guidance in the effort to satisfy the showing requirements (statements and supporting documentation). (*See*: MPEP §711.03(c)(I).)

Petitioner has failed to support the petition and averments of search and non-discovery with, *inter alia*, the documentary presentations of the reply due-date docket for the dates on which the papers would have been filed, as well as the narrative showings set forth at MPEP §711.03(c)(I).

BACKGROUND

The record reflects as follows:

Petitioner failed to reply timely and properly Notice of Additional Fees Due mailed on 16 November, 2007, with reply due absent extension of time on or before Monday, 17 December, 2007.

The application went abandoned by operation of law after midnight 16 December, 2007.

The Office mailed the Notice of Abandonment on 23 May, 2008.

On 24 July, 2008, Petitioner filed a petition, asserting, *inter alia*, that the Notice of Additional Fees Due was not received, and averred a search of the file and non-discovery, but failed to support the petition and averments of search and non-discovery with the documentary presentations of the reply due-date docket for the date on which the papers would have been filed. Not only did Petitioner fail to made a showing of reliability of docketing, but Petitioner made an affirmative statement that he had a history of problems with mail delivery at his correspondence address—a problem which Petitioner made no showing of seeking to overcome. Petitioner also referred inappropriately to other applications not under consideration here (each application is a separate file: 37 C.F.R. §1.4(b)), as well as to telephone discussions that are not the basis for any action or inaction by Petitioner. (37 C.F.R. §1.2.) Because Petitioner appears to have waited until the last day to respond and further to submit the instant petition after midnight at the Office, it is noted that Petitioner's reply to the Notice of Abandonment is late under the rule (37 C.F.R. §1.181), and Petitioner should refer to the guidance set forth in the Commentary at MPEP §711.03(c).

The discussion at MPEP 711.03(c)(I) provides in pertinent part:

***

> The showing required to establish nonreceipt of an Office communication must include a statement from the practitioner describing the system used for recording an Office action received at the correspondence address of record with the USPTO. The statement should establish that the docketing system is sufficiently reliable. It is expected that the record

would include, but not be limited to, the application number, attorney docket number, the mail date of the Office action and the due date for the response.

Practitioner must state that the Office action was not received at the correspondence address of record, and that a search of the practitioner's record(s), including any file jacket or the equivalent, and the application contents, indicates that the Office action was not received. A copy of the record(s) used by the practitioner where the non-received Office action would have been entered had it been received is required.

A copy of the practitioner's record(s) required to show non-receipt of the Office action should include the master docket for the firm. That is, if a three month period for reply was set in the nonreceived Office action, a copy of the master docket report showing all replies docketed for a date three months from the mail date of the nonreceived Office action must be submitted as documentary proof of nonreceipt of the Office action. If no such master docket exists, the practitioner should so state and provide other evidence such as, but not limited to, the following: the application file jacket; incoming mail log; calendar; reminder system; or the individual docket record for the application in question.[1]

***

Petitioner's reply to the Notice of Abandonment was late under the rule (37 C.F.R. §1.181), and Petitioner was reminded of the guidance set forth in the Commentary at MPEP §711.03(c)(I), et seq., in that regard. As a result of the several deficiencies, the petition was dismissed on 5 September, 2008.

On 5 November, 2008, Petitioner renewed his petition, but again referred inappropriately to matters not written and so of record (e.g., the alleged conversation with an Examiner); failed to provide a due-date docket/calendar, and narrative of the docketing system and its reliability—and so track through or otherwise move step-wise through the showings/documentation outlined above. Thus, once more Petitioner has failed to comply with the requirements set out in the Commentary at MPEP §711.03(c)(I).

Out of an abundance of caution, Petitioners always are reminded that the filing of a petition under 37 C.F.R. §1.181 does not toll any periods that may be running any action by the Office and a petition seeking relief under the regulation must be filed within two (2) months of the act complained of (*see*: 37 C.F.R. §1.181(f)), and that those registered to practice and all others who make representations before the Office are reminded to inquire into the underlying facts of representations made to the Office and support averments with the appropriate documentation–since all owe to the Office the continuing duty to disclose.[2]

---

1 *See*: MPEP §711.03(c) (I)(A).

2 See supplement of 17 June, 1999. The Patent and Trademark Office is relying on Petitioner's duty of candor and good faith and accepting a statement made by Petitioner. See Changes to Patent Practice and Procedure, 62 Fed. Reg. at 53160 and 53178, 1203 Off. Gaz. Pat. Office at 88 and 103 (responses to comments 64 and 109)(applicant obligated under 37 C.F.R. §10.18 to inquire into the underlying facts and circumstances when providing statements to the Patent and Trademark Office).

The availability of applications and application papers online to applicants/practitioners who diligently associate their Customer Number with the respective application(s) now provides an applicant/practitioner on-demand information as to events/transactions in an application.

STATUTES, REGULATIONS

Congress has authorized the Commissioner to "revive an application if the delay is shown to the satisfaction of the Commissioner to have been "unavoidable." 35 U.S.C. §133 (1994).

Allegations as to the Request to Withdraw the Holding of Abandonment

The guidance in the Commentary at MPEP §711.03(c)(I) specifies the showing required and how it is to be made and supported.

Petitioner failed to make the showing required.

CONCLUSION

Accordingly, The petition under 37 C.F.R. §1.181 is **dismissed**.

ALTERNATIVE VENUE

Should Petitioner wish to revive the application, Petitioner may wish to properly file a petition to the Commissioner requesting revival of an application abandoned due to unintentional delay under 37 C.F.R. §1.137(b). (See: http://www.uspto.gov/web/offices/pac/mpep/documents/0700_711_03_c.htm#sect711.03c)

A petition to revive on the grounds of unintentional delay must be filed promptly and such petition must be accompanied by the reply, the petition fee, a terminal disclaimer and fee where appropriate and a statement that "the entire delay in filing the required reply from the due date for the reply until the filing of a grantable petition was unintentional." (The statement is in the form available online.)

Further correspondence with respect to this matter should be addressed as follows:

By Mail: Mail Stop PETITION
Commissioner for Patents
P. O. Box 1450
Alexandria, VA 22313-1450

By hand: U. S. Patent and Trademark Office
Customer Service Window, Mail Stop Petitions
Randolph Building
401 Dulany Street
Alexandria, VA 22314

By facsimile: **(571) 273-8300**
Attn: Office of Petitions

Telephone inquiries regarding this decision may be directed to the undersigned at (571) 272-3214—it is noted, however, that all practice before the Office is in writing (see: 37 C.F.R. §1.2[3]) and the proper authority for action on any matter in this regard are the statutes (35 U.S.C.), regulations (37 C.F.R.) and the commentary on policy (MPEP). Therefore, no telephone discussion may be controlling or considered authority for Petitioner's action(s).

/John J. Gillon, Jr./
John J. Gillon, Jr.
Senior Attorney
Office of Petitions

[3] The regulations at 37 C.F.R. §1.2 provide:

§1.2 Business to be transacted in writing.

All business with the Patent and Trademark Office should be transacted in writing. The personal attendance of applicants or their attorneys or agents at the Patent and Trademark Office is unnecessary. The action of the Patent and Trademark Office will be based exclusively on the written record in the Office. No attention will be paid to any alleged oral promise, stipulation, or understanding in relation to which there is disagreement or doubt.

UNITED STATES PATENT AND TRADEMARK OFFICE

UNITED STATES DEPARTMENT OF COMMERCE
U.S. Patent and Trademark Office
Address: COMMISSIONER FOR PATENTS
P.O. Box 1450
Alexandria, Virginia 22313-1450
www.uspto.gov

25859 e 11/16/2007

WEI TE CHUNG
FOXCONN INTERNATIONAL, INC.
1650 MEMOREX DRIVE
SANTA CLARA, CA 95050

Paper No.

Application No.:	**11/492,148**	**Date Mailed:**	**11/16/2007**
First Named Inventor:	Zhang, George, (HuanYi)	Examiner:	LEON, EDWIN A
Attorney Docket No.:		Art Unit:	2833
Confirmation No.:	5273	Filing Date:	07/24/2006

Please find attached an Office communication concerning this application or proceeding.

Commissioner for Patents

NOTICE REQUIRING EXCESS CLAIMS FEES	Application No. 11/492,148	Applicant(s) ZHANG, GEORGE (HUANYI)	
		Art Unit 1600	

The excess claim(s) filed on is not accompanied by the appropriate payment of excess claims fees set forth in 37 CFR 1.16(h)-(j) or 1.492(d)-(f). Excess claims fees are required for each claim in independent form in excess of three (§ 1.16(h)), each claim (whether dependent or independent) in excess of twenty (note that § 1.75(c) indicates how multiple dependent claims are considered for fee calculation purposes) (§ 1.16(i)), and each application that contains a multiple dependent claim (§ 1.16(j)).

Since the application is not under a final rejection, applicant is given a time period of **ONE (1) MONTH or THIRTY (30) DAYS** from the mailing date of this notice, whichever is longer, to submit either: (1) the fee payment of $, or (2) an amendment in compliance with 37 CFR 1.121 that cancels the excess claim(s), in order to avoid ABANDONMENT. Extensions of this time period may be granted under 37 CFR 1.136, unless the excess claim(s) was presented in a preliminary amendment.

☐ 1 The funds in Deposit Account No. are insufficient to cover the entire fee due. The balance is due within the time period set forth in this notice. See note below regarding the appropriate service charge.

☐ 2. The Credit Card payment to cover the entire fee due to Account **(Card type + last 4 digits ONLY)** was refused. The balance is due within the time period set forth in this notice. See note below regarding the appropriate service charge.

☐ 3. The amendment that includes the excess claim(s) has not been entered, since applicant has failed to remit (or authorize charge to a Deposit Account or Credit Card) the fee as indicated on the attached Patent Application Fee Determination Record (PTO/SB/06). Remittance or authorization is due within the time period set forth in this notice.

☐ 4. The fee submitted in this application is insufficient. A balance of $ is due for presentation of excess claims (37 CFR 1.16(h)-(j) or 1.492(d)-(f)).

☐ 5. Other.

Explanation (*Provide specific details of the required correction in order to assist the applicant. Indicate whether a service charge has been added to the fee due*):

THE AMOUNT OF THE FEE(S) DUE IS SUBJECT TO CHANGE, GENERALLY ON OCTOBER 1 OF EACH YEAR (37 CFR 1.16, 1.21 & 1.492). THE **AMOUNT OF THE FEE(S) DUE IS DETERMINED AS OF THE DATE A COMPLETE REPLY WITH THE APPROPRIATE FEE(S) IS RECEIVED BY THE OFFICE** (37 CFR 1.8 & 1.10). BECAUSE THE AMOUNT DUE IS SUBJECT TO CHANGE, IT IS RECOMMENDED THAT APPLICANT CHECK THE CURRENT FEE SCHEDULE WHICH IS AVAILABLE ON THE USPTO'S WEBSITE AT: ***http://www.uspto.gov/web/offices/ac/qs/ope/fees.htm***

Service Charges: There is a $50 service charge for processing each payment refused (including a check returned "unpaid") or charged back by a financial institution (37 CFR 1.21(m)). There is a $25.00 service charge for each month when the balance of a deposit account is below $1000 at the end of the month (37 CFR 1.21(b)(2)).

Technical Support Staff (TSS): Henrietta K. Dendy Phone Number: 5712720517

Note to TSS: Please do NOT use this notice if the application is under a final rejection.

UNITED STATES PATENT AND TRADEMARK OFFICE

Commissioner for Patents
United States Patent and Trademark Office
P.O. Box 1450
Alexandria, VA 22313-1450
www.uspto.gov

DURECT CORPORATION
THOMAS P. MCCRACKEN
2 RESULTS WAY
CUPERTINO, CA 95014

MAILED

FEB 12 2009

OFFICE OF PETITIONS

In re Application of :
Gunjan JUNNARKAR et al. :
Application No. 11/492,153 : DECISION ON PETITION
Filed: July 24, 2006 :
Attorney Docket No. DURE-302 :

This is a decision on the petition under the unintentional provisions of 37 CFR 1.137(b), filed September 03, 2008, to revive the above-identified application.

The petition is **GRANTED**.

The application became abandoned for failure to reply in a timely manner to the non-final Office action mailed, January 25, 2008, which set a shortened statutory period for reply of three (3) months. No extensions of time under the provisions of 37 CFR 1.136(a) were obtained. Accordingly, the application became abandoned on April 26, 2008.

The petition satisfies the conditions for revival pursuant to the provisions of 37 CFR 1.137(b) in that (1) the reply in the form of an amendment; (2) the petition fee of $1540; and (3) the required statement of unintentional delay have been received. Accordingly, the reply to the non-compliant notice of January 25, 2008 is accepted as having been unintentionally delayed.

The power of attorney and the statement under 37 CFR 3.73(b) filed by the assignee with the petition on September 03, 2008 has been accepted and made of record.

Telephone inquiries concerning this decision should be directed to the undersigned at (571) 272-4231.

The application file is being referred to Technology Center AU 1623 for appropriate action on the concurrently filed amendment.

Michelle R. Eason
Paralegal Specialist
Office of Petitions

UNITED STATES PATENT AND TRADEMARK OFFICE

Commissioner for Patents
United States Patent and Trademark Office
P.O. Box 1450
Alexandria, VA 22313-1450
www.uspto.gov

LITMAN LAW OFFICES, LTD.
P.O. BOX 15035
CRYSTAL CITY STATION
ARLINGTON VA 22215

COPY MAILED

JUN 30 2008

OFFICE OF PETITIONS

In re Application of	:	
Albert Davis, Sr.	:	
Application No. 11/492,162	:	DECISION ON PETITION
Filed: July 25, 2006	:	TO MAKE SPECIAL UNDER
Attorney Docket No. 30414.00	:	37 CFR 1.102(c)(1)
	:	

This is a decision on the petition under 37 CFR 1.102(c)(1), filed June 9, 2008, to make the above-identified application special based on applicant's age as set forth in M.P.E.P. § 708.02, Section IV.

The petition is **GRANTED**.

A grantable petition to make an application special under 37 CFR 1.102(c)(1) and MPEP § 708.02, Section IV: Applicant's Age must be accompanied by evidence showing that at least one of the applicants is 65 years of age, or more, such as a birth certificate or a statement by applicant. No fee is required

The instant petition includes a statement from the applicant declaring that he is 65 years of age or older. Accordingly, the above-identified application has been accorded "special" status.

Telephone inquiries concerning this decision should be directed to Terri Williams at 571-272-2991.

All other inquiries concerning either the examination or status of the application should be directed to the Technology Center.

The application is being forwarded to the Technology Center Art Unit 3746 for action on the merits commensurate with this decision.

Terri Williams
Petitions Examiner
Office of Petitions

UNITED STATES PATENT AND TRADEMARK OFFICE

UNITED STATES DEPARTMENT OF COMMERCE
United States Patent and Trademark Office
Address: COMMISSIONER FOR PATENTS
P.O. Box 1450
Alexandria, Virginia 22313-1450
www.uspto.gov

APPLICATION NO.	FILING DATE	FIRST NAMED INVENTOR	ATTORNEY DOCKET NO.	CONFIRMATION NO.
11/492,163	07/23/2006	Peter James Fricke	200506333-1	6517

7590 04/21/2008

HEWLETT PACKARD COMPANY
P O BOX 272400, 3404 E. HARMONY ROAD
INTELLECTUAL PROPERTY ADMINISTRATION
FORT COLLINS, CO 80527-2400

EXAMINER	
HJERPE, RICHARD A	

ART UNIT	PAPER NUMBER
2629	

NOTIFICATION DATE	DELIVERY MODE
04/21/2008	ELECTRONIC

DECISION GRANTING PETITION UNDER 37 CFR 1.138(d)

The declaration of express abandonment is recognized

This is in response to the petition under 37 CFR 1.138(d), requesting for a refund of any previously paid search fee and excess claims fee in the above-identified application.

The petition is granted.

The express abandonment is recognized. Any previously paid search fee and excess claims fee are hereby refunded.

Telephone inquiries should be directed to the Office of Data Management at (571) 272-4200.

Patent Publication Branch
Office of Data Management

Adjustment date: 04/23/2008 DTERRY
07/26/2006 EAYALEW1 00000012 082025
02 FC:1111 500.00 CR
11492163

FORM PET651G (Rev. 08/07)

UNITED STATES PATENT AND TRADEMARK OFFICE

UNITED STATES DEPARTMENT OF COMMERCE
United States Patent and Trademark Office
Address: COMMISSIONER FOR PATENTS
P.O. Box 1450
Alexandria, Virginia 22313-1450
www.uspto.gov

APPLICATION NO.	FILING DATE	FIRST NAMED INVENTOR	ATTORNEY DOCKET NO.	CONFIRMATION NO.
11/492,164	07/23/2006	Peter James Fricke	200506314-1	6518

7590 04/21/2008

HEWLETT PACKARD COMPANY
P O BOX 272400, 3404 E. HARMONY ROAD
INTELLECTUAL PROPERTY ADMINISTRATION
FORT COLLINS, CO 80527-2400

EXAMINER	
HJERPE, RICHARD A	

ART UNIT	PAPER NUMBER
2629	

NOTIFICATION DATE	DELIVERY MODE
04/21/2008	ELECTRONIC

DECISION GRANTING PETITION UNDER 37 CFR 1.138(d)

The declaration of express abandonment is recognized

This is in response to the petition under 37 CFR 1.138(d), requesting for a refund of any previously paid search fee and excess claims fee in the above-identified application.

The petition is granted.

The express abandonment is recognized. Any previously paid search fee and excess claims fee are hereby refunded.

Telephone inquiries should be directed to the Office of Data Management at (571) 272-4200.

Patent Publication Branch
Office of Data Management

UNITED STATES PATENT AND TRADEMARK OFFICE

UNITED STATES DEPARTMENT OF COMMERCE
United States Patent and Trademark Office
Address: COMMISSIONER FOR PATENTS
P.O. Box 1450
Alexandria, Virginia 22313-1450
www.uspto.gov

APPLICATION NO.	FILING DATE	FIRST NAMED INVENTOR	ATTORNEY DOCKET NO.	CONFIRMATION NO.
11/492,168	07/24/2006	Peter James Fricke	200506313-1	6507

7590 04/21/2008

HEWLETT PACKARD COMPANY
P O BOX 272400, 3404 E. HARMONY ROAD
INTELLECTUAL PROPERTY ADMINISTRATION
FORT COLLINS, CO 80527-2400

EXAMINER	
HJERPE, RICHARD A	

ART UNIT	PAPER NUMBER
2629	

NOTIFICATION DATE	DELIVERY MODE
04/21/2008	ELECTRONIC

DECISION GRANTING PETITION UNDER 37 CFR 1.138(d)

The declaration of express abandonment is recognized

This is in response to the petition under 37 CFR 1.138(d), requesting for a refund of any previously paid search fee and excess claims fee in the above-identified application.

The petition is granted.

The express abandonment is recognized. Any previously paid search fee and excess claims fee are hereby refunded.

Telephone inquiries should be directed to the Office of Data Management at (571) 272-4200.

Patent Publication Branch
Office of Data Management

Adjustment date: 04/21/2008 DTERRY
11492168
04/21/2006 EAYALEW1 00000018 082025
01 FC:1111 500.00 CR

UNITED STATES PATENT AND TRADEMARK OFFICE

Commissioner for Patents
United States Patent and Trademark Office
P.O. Box 1450
Alexandria, VA 22313-1450
www.uspto.gov

LATHROP & GAGE LC
4845 PEARL EAST CIRCLE
SUITE 300
BOULDER CO 80301

COPY MAILED

MAY 10 2007

OFFICE OF PETITIONS

In re Application of :
Jared D. Stallings :
Application No. 11/492,170 : DECISION ON PETITION
Filed: July 27, 2006 : TO WITHDRAW
Attorney Docket No. 05E143 446379 : FROM RECORD
:

This is a decision on the Request to Withdraw as attorney or agent of record under 37 C.F.R. § 1.36(b), filed October 20, 2006.

The request is **DISMISSED** as moot.

A review of the file record indicates that the power of attorney to Lathrop & Gage, LC has been revoked by the assignee of the patent application on March 26, 2007. Accordingly, the request to withdraw under 37 C.F.R. § 1.36(b) is moot.

All future communications from the Office will continue to be directed to the below-listed address until otherwise notified by applicant.

Telephone inquires concerning this decision should be directed to undersigned at 571-272- 1642.

April M. Wise
Petitions Examiner
Office of Petitions

cc: KUTAL ROCK, LLP
1801 CALIFORNIA STREET
SUITE 3100
DENVER, CO 80202

UNITED STATES PATENT AND TRADEMARK OFFICE

UNITED STATES DEPARTMENT OF COMMERCE
United States Patent and Trademark Office
Address: COMMISSIONER FOR PATENTS
P.O. Box 1450
Alexandria, Virginia 22313-1450
www.uspto.gov

APPLICATION NUMBER	FILING OR 371 (c) DATE	FIRST NAMED APPLICANT	ATTY. DOCKET NO./TITLE
11/492,170	07/24/2006	Jared D. Stallings	05E143 446379

CONFIRMATION NO. 6566

OC000000023739751

30955
LATHROP & GAGE LC
4845 PEARL EAST CIRCLE
SUITE 300
BOULDER, CO 80301

Date Mailed: 05/07/2007

NOTICE REGARDING CHANGE OF POWER OF ATTORNEY

This is in response to the Power of Attorney filed 03/26/2007.

- The Power of Attorney to you in this application has been revoked by the assignee who has intervened as provided by 37 CFR 3.71. Future correspondence will be mailed to the new address of record(37 CFR 1.33).

Office of Initial Patent Examination (571) 272-4000, or 1-800-PTO-9199

FORMER ATTORNEY/AGENT COPY

UNITED STATES PATENT AND TRADEMARK OFFICE

Commissioner for Patents
United States Patent and Trademark Office
P.O. Box 1450
Alexandria, VA 22313-1450
www.uspto.gov

Juan Carlos A. Marquez
c/o Stites & Harbison PLLC
1199 North Fairfax Street
Suite 900
Alexandria VA 22314-1437

MAILED

MAR 11 2010

DIRECTOR OFFICE
TECHNOLOGY CENTER 2400

In re Application of:
YAMADA et al.
Application No. 11/492,181
Filed: July 25, 2006
For: ROUTER AND COMMUNICATION SYSTEM

DECISION SUA SPONTE WITHDRAWING OFFICE ACTIONS

This is a decision, *sua sponte*, withdrawing the Office Action mailed on December 30, 2009.

On February 16, 2010, applicant's representative, Mr. Marquez, called to inquire whether it is proper for examiner Lee to issue the Office Action.

A review of the application file indicates that a Request for Continued Examination (RCE) and a request for suspension of action for a period of 3 months were submitted on October 13, 2009. Thus, no Office Action should be mailed prior to January 13, 2010.

Although no petition or request to withdraw the Office Action has been filed, a Sua Sponte decision to vacate the Office Action of December 30, 2009 is determined to be proper in view of the RCE and the request for suspension of action submitted on October 13, 2009. The Office Action has been closed from public view as of mailing of this decision.

Any inquiry concerning this decision should be directed to Daniel Ryman whose telephone number is (571) 272-3152.

Valencia Martin-Wallace, Director
Technology Center 2400
Networking, Multiplex, Cable and Security

UNITED STATES PATENT AND TRADEMARK OFFICE

Commissioner for Patents
United States Patent and Trademark Office
P.O. Box 1450
Alexandria, VA 22313-1450
www.uspto.gov

CALIF KIP TERVO
LAW OFFICES OF CALIF KIP TERVO
6387 CAMINITO LAZARO
SAN DIEGO CA 92111

COPY MAILED

SEP 18 2007

OFFICE OF PETITIONS

In re Application of :
WACHTLER, et al. :
Application No. 11/492,184 : DECISION ON PETITION
Filed: July 24, 2006 : TO MAKE SPECIAL UNDER
Attorney Docket No. **Wacht1W-1** : 37 CFR 1.102(c)(1)
:

This is a decision on the petition under 37 CFR 1.102(c)(1), filed July 24, 2006, to make the above-identified application special based on applicant's age as set forth in M.P.E.P. § 708.02, Section IV.

The petition is **GRANTED.**

A grantable petition to make an application special under 37 CFR 1.102(c)(1) and MPEP § 708.02, Section IV: Applicant's Age must be accompanied by evidence showing that at least one of the applicants is 65 years of age, or more, such as a birth certificate or a statement by applicant. No fee is required

The instant petition includes the statement of inventor William R. Wachtler, attesting to his age. Accordingly, the above-identified application has been accorded "special" status.

Inquiries concerning either the examination or status of the application should be directed to the Technology Center.

Telephone inquiries concerning this decision should be directed to the undersigned at 571-272-7253.

The application is being forwarded to the Technology Center Art Unit 3722 for action on the merits commensurate with this decision.

Monica A. Graves
Petitions Examiner
Office of Petitions

UNITED STATES PATENT AND TRADEMARK OFFICE

Commissioner for Patents
United States Patent and Trademark Office
P.O. Box 1450
Alexandria, VA 22313-1450
www.uspto.gov

FUJITSU PATENT CENTER
C/O CPA GLOBAL
P.O. BOX 52050
MINNEAPOLIS, MN 55402

MAILED

APR 06 2010

OFFICE OF PETITIONS

In re Application of :
Hidenobu FUKUTOME, et *al.* :
Application No. 11/492,199 : DECISION GRANTING PETITION
Filed: July 25, 2006 : UNDER 37 CFR 1.313(c)(2)
Attorney Docket No. **06-40575** :

This is a decision on the petition under 37 CFR 1.313(c)(2), filed April 5, 2010, to withdraw the above-identified application from issue after payment of the issue fee.

The petition is **GRANTED**.

The above-identified application is withdrawn from issue for consideration of a submission under 37 CFR 1.114 (request for continued examination). *See* 37 CFR 1.313(c)(2).

Petitioner is advised that the issue fee paid on February 14, 2010 cannot be refunded. If, however, this application is again allowed, petitioner may request that it be applied towards the issue fee required by the new Notice of Allowance.[1]

Telephone inquiries should be directed to the undersigned at (571) 272-7253.

This application is being referred to Technology Center AU 2894 for processing of the request for continued examination under 37 CFR 1.114 and for consideration of the concurrently filed information disclosure statement.

/Monica A. Graves/
Petitions Examiner, Office of Petitions

---

[1] *The request to apply the issue fee to the new Notice may be satisfied by completing and returning the new Part B – Fee(s) Transmittal Form (along with any balance due at the time of submission). Petitioner is advised that the Issue Fee Transmittal Form* ***must*** *be completed and timely submitted to avoid abandonment of the application.*

UNITED STATES PATENT AND TRADEMARK OFFICE

Commissioner for Patents
United States Patent and Trademark Office
P.O. Box 1450
Alexandria, VA 22313-1450
www.uspto.gov

ROBERT B. REESER, III
C/O ARMSTRONG TEASDALE LLP
ONE METROPOLITAN SQUARE, SUITE 2600
ST. LOUIS MO 63102

COPY MAILED

OCT 16 2007

OFFICE OF PETITIONS

In re Application of :
BRANDON GERARD SUDHOLT :
Application No. 11/492,205 :
Filed: 07/24/2006 :
Attorney Docket No. SUDHOLT-2 :

DECISION ON PETITION

This is a decision on the petition under 37 CFR 1.137(b), filed July 3, 2007, to revive the above-identified application.

The above-identified application became abandoned for failure to file a timely response to the Notice to File Missing Parts of Nonprovisional Application mailed August 10, 2006, which set a two-month extendable period to reply. The above-identified application became abandoned on October 11, 2006. On April 24, 2007 the Office mailed a Notice of Abandonment.

Petitioner has met the requirements to revive the above-identified application pursuant to 37 CFR 1.137(b). Petitioner submitted the required reply, paid the petition fee, and made the proper statement of unintentional delay. Accordingly, the petition is **granted.**

This matter is being referred to the Office of Patent Application Processing.

Telephone inquiries specific to this decision may be directed to the undersigned at (571) 272-3211.

C. T. Donnell

Christina Tartera Donnell
Senior Petitions Attorney
Office of Petitions

UNITED STATES PATENT AND TRADEMARK OFFICE

Commissioner for Patents
United States Patent and Trademark Office
P.O. Box 1450
Alexandria, VA 22313-1450
www.uspto.gov

BAHRAM BAHRAMIAN
202 HALPINE WALK COURT
ROCKVILLE, MD 20851

COPY MAILED

AUG 23 2007

OFFICE OF PETITIONS

In re Application of :

BAHRAMIAN, Bahram :
Application No. 11/492,224 : DECISION ON PETITION
Filed: July 25, 2006 : TO MAKE SPECIAL UNDER
Attorney Docket No. **BB-05-1** : 37 CFR 1.102(c)(1)
:

This is a decision on the petition under 37 CFR 1.102(c)(1), to make the above-identified application special based on applicant's age as set forth in M.P.E.P. § 708.02, Section IV and under 37 CFR 1.102(c)(2)(i) to make special based on environmental quality as set forth in M.P.E.P. § 708.02, Section V and under 37 CFR 1.102(c)(2)(ii) to make special based on energy conservation as set forth in M.P.E.P. § 708.02, Section VI, filed August 2, 2007 and re-submitted August 8, 2007 .

The petition is **GRANTED.**

A grantable petition to make an application special under 37 CFR 1.102(c)(1) and MPEP § 708.02, Section IV: Applicant's Age must be accompanied by evidence showing that at least one of the applicants is 65 years of age, or more, such as a birth certificate or a statement by applicant. No fee is required

The instant petition includes a copy of inventor Bahram Bahramian's passport, attesting to his age. Accordingly, the above-identified application has been accorded "special" status.

In view of the above petition being granted and the application being made special, the petitions under 37 CFR 1.102(c)(2)(i), Section V and under 37 CFR 1.102(c)(2)(ii), Section VI, are **DISMISSED AS MOOT.**

The application is being forwarded to the Technology Center Art Unit 3635 for action on the merits commensurate with this decision.

Inquiries concerning either the examination or status of the application should be directed to the Technology Center. Telephone inquiries concerning this decision should be directed to the undersigned at 571-272-7253.

Monica A. Graves
Petitions Examiner
Office of Petitions

UNITED STATES PATENT AND TRADEMARK OFFICE

Commissioner for Patents
United States Patent and Trademark Office
P.O. Box 1450
Alexandria, VA 22313-1450
www.uspto.gov

WOODCOCK WASHBURN LLP
CIRA CENTRE, 12TH FLOOR
2929 ARCH STREET
PHILADELPHIA, PA 19104-2891

COPY MAILED

FEB 29 2008

In re Application of :

HILLHOUSE, Robert et al. :
Application No. 11/492,247 : DECISION ON PETITION
Filed: July 25, 2006 : TO WITHDRAW
Attorney Docket No. **IVPH-0767** : FROM RECORD
:

This is a decision on the Request to Withdraw as attorney or agent of record under 37 C.F.R. § 1.36(b), filed December 10, 2007.

The request is **APPROVED**.

A grantable request to withdraw as attorney/agent of record must be signed by every attorney/agent seeking to withdraw or contain a clear indication that one attorney is signing on behalf of another/others. A request to withdraw will not be approved unless at least 30 (thirty) days would remain between the date of approval and the later of the expiration date of a time to file a response or the expiration date of the maximum time period which can be extended under 37 C.F.R. § 1.136(a).

The request was signed by, Michael P. Dunnam on behalf of all attorneys of record who are associated with customer No. 23377. All attorneys/agents associated have been withdrawn. Applicant is reminded that there is no attorney of record at this time.

The request to change the correspondence of record is not acceptable as the requested correspondence address is not that of: (1) the first named signing inventor; or (2) an intervening assignee of the entire interest under 37 C.F.R 3.71. All future communications from the Office will be directed to the first named signing inventor.

Telephone inquiries concerning this decision should be directed to the undersigned at 571-272-4231.

Michelle R. Eason
Paralegal Specialist
Office of Petitions

cc: **ROBERT HILLHOUSE**
120 HOLLAND AVENUE
UNIT 4B
OTTAWA, CANADA K1Y 0X6

cc: **PERKINS COIE**
1201 THIRD AVENUE
SUITE 4800
SEATTLE, WASHINGTON 98101

UNITED STATES PATENT AND TRADEMARK OFFICE

UNITED STATES DEPARTMENT OF COMMERCE
United States Patent and Trademark Office
Address: COMMISSIONER FOR PATENTS
P.O. Box 1450
Alexandria, Virginia 22313-1450
www.uspto.gov

PVF -- SUN MICROSYSTEMS INC.
C/O PARK, VAUGHAN & FLEMING LLP
2820 FIFTH STREET
DAVIS, CA 95618-7759

Mail Date: 04/21/2010

Applicant	: Abid Ali	: DECISION ON REQUEST FOR
Patent Number	: 7664918	: RECALCULATION of PATENT
Issue Date	: 02/16/2010	: TERM ADJUSTMENT IN VIEW
Appliction No	: 11/492,257	: OF WYETH AND NOTICE OF INTENT TO
Filed	: 07/24/2006	: ISSUE CERTIFICATE OF CORRECTION
		:

The Request for Recalculation is **GRANTED** to the extent indicated.

The patent term adjustment has been determined to be **803** days. The USPTO will *sua sponte* issue a certificate of correction reflecting the amount of PTA days determined by the recalculation.

Prior to the issuance of the certificate of correction, the USPTO will afford patentee an opportunity to be heard and request reconsideration. Accordingly, patentee has **one month or thirty (30) days**, whichever is longer, to file a request for reconsideration of this patent term adjustment calculation. See 35 U.S.C. 154(b)(3)(B)(ii) and 37 CFR 1.322(a)(4). No extensions of time will be granted under 37 CFR 1.136.

Patentee should use document code PET.OP if electronically filing a request for reconsideration of this patent term adjustment calculation. The patentee must also include the information required by 37 CFR 1.705(b)(2) and the fee required by 37 CFR 1.18(e). If patentee does not file a timely request for reconsideration of this patent term adjustment calculation including the information required by 37 CFR 1.705(b)(2) and the fee required by 37 CFR 1.18(e), the USPTO will issue a certificate of correction reflecting the PTA determination noted above.

Patentee should be aware that in order to preserve the right to review in the United States District Court for the District of Columbia of the USPTO patent term adjustment determination, patentee must ensure that he or she also take the steps required under 35 U.S.C. 154(b)(4)(A) in a timely manner. Nothing in the request for recalculation should be construed as providing an alternative time frame for commencing a civil action under 35 U.S.C. 154(b)(4)(A).

Any questions concerning this decision should be directed to the Office of Patent Legal Administration at 571-272-7702.

\UNITED STATES PATENT AND TRADEMARK OFFICE

COMMISSIONER FOR PATENTS
UNITED STATES PATENT AND TRADEMARK OFFICE
P.O. BOX 1450
ALEXANDRIA, VA 22313-1450
WWW.USPTO.GOV

Paper No. None

GATES & COOPER LLP
HOWARD HUGHES CENTER
6701 CENTER DRIVE WEST, SUITE 1050
LOS ANGELES CA 90045

COPY MAILED

JUN 21 2007

OFFICE OF PETITIONS

In re Application of :
Yunbing Wang, Udo Hoss, Rajv :
Shah, Jenn-Hann Larry Wang, :
William P. Van Antwerp, and :
Brooks B. Cochran :
Application No. 11/492,273 : DECISION ON PETITION
Filed: July 25, 2006 : UNDER 37 C.F.R. §1.47(A)
Attorney Docket No. G&C 130.81-US-01 :
Title: ANALYTE SENSORS AND METHODS FOR MAKING AND USING THEM :

This is in response to the petition under 37 C.F.R. §1.47(a)[1], filed October 13, 2006.

---

1 A grantable petition under 37 C.F.R. §1.47(a) requires:
(1) the petition fee of $200;
(2) a surcharge of either $65 or $130, if the petition is not filed at the time of filing the application, as set forth in 37 CFR § 1.16(f);
(3) a statement of the last known address of the non-signing inventors;
(4) proof that either:
a) a copy of the entire application (specification, claims, drawings, and the oath or declaration) was sent or given to the non-signing inventor for review and proof that the non-signing inventor refuses to join in the application, or
b) the non-signing inventor cannot be found or reached after diligent effort, and a statement that these efforts were not successful;
(5) a declaration which complies with 37 CFR §1.63.

On July 25, 2006, the application was filed, identifying Yunbing Wang, Udo Hoss, Rajv Shah, Jenn-Hann Larry Wang, William P. Van Antwerp, and Brooks B. Cochran as joint inventors. The application was deposited without an executed declaration. On August 11, 2006, a "Notice to File Missing Parts of Nonprovisional Application - Filing Date Granted" (Notice) was mailed, notifying applicant that a fully executed oath or declaration and the surcharge associated with the late submission of the same were required. This Notice set a two-month period for reply.

With the present petition, Petitioner has submitted, *inter alia*, the surcharge associated with the late submission of an oath or declaration, a declaration that has been executed by each of the joint inventors save Udo Hoss, a statement of facts, and a one-month extension of time to make timely this response. The petition fee has been charged to Petitioner's Deposit Account, as authorized in the petition.

Petitioner has met requirements (1) - (3) of 37 C.F.R. § 1.47(a).

Regarding the fourth requirement above, it is clear that a complete copy of the application has not been sent to the last-known residential addresses of the non-signing inventors. In a letter dated May 5, 2006, Petitioner offered to send the application papers to the legal representative of the non-signing inventor's current employer. This offer was rescinded in a letter dated May 16, 2006, where a different offer was extended to provide the non-signing inventor with an opportunity to review the application papers, while being watched by a representative of the assignee. In a letter dated July 14, 2006, Petitioner offered to make the documents available for review on one particular day, either in Petitioner's legal offices or in the office of the legal representative of the non-signing inventor's current employer.

It does not appear that a complete copy of the application was sent to the last known address of the non-signing inventor. Where a refusal of an inventor to sign the application papers is alleged, the Office requires the Petitioner to establish that a bona fide attempt was made to mail a complete copy of the application, which entails the specification, claims, drawings, and oath or declaration[2].

---

2 See MPEP 409.03(d).

Petitioner's offer to watch the inventor while he reviewed the documents, or make them available for a single day, is not tantamount to mailing the documents to the last known address of the non-signing inventor.

Before filing the renewed petition, Petitioner should mail a complete copy of the application to the last known residential address of the non-signing joint inventor (or to the address of the legal representative of the same), and provide the non-signing inventor with a reasonable period of time to respond. Petitioner should note that any statement that pertains to the presentation should be made by one having firsthand knowledge of the event. Statements based on hearsay are not normally accepted.

It follows that since it has not been shown that a complete copy of the application was sent to the inventor, one cannot refuse to sign something which one has not seen. A refusal by an inventor to sign an oath or declaration when the inventor has not been presented with the application papers does not itself suggest that the inventor is refusing to join the application unless it is clear that the inventor understands exactly what he or she is being asked to sign and refuses to accept the application papers. It is reasonable to require that the inventors be presented with the application papers before a petition under Rule §1.47 is granted since such a procedure ensures that the inventor is apprised of the application to which the oath or declaration is directed[3].

Regarding the fifth requirement of Rule §1.47(a), the declaration that was submitted concurrently with the present petition cannot be accepted, as it is defective. The oath or declaration is defective because it does not state that the person making the oath or declaration acknowledges the duty to disclose to the Office all information known to the person to be material to patentability as defined in § 1.56. Instead of "material to patentability," it improperly states "material to the examination of this application," which has no meaning in the context of the rule.

It follows that the present petition must be **DISMISSED.**

Any renewed petition must be submitted within **TWO MONTHS** from the mail date of this decision. Extensions of time under 37 C.F.R. §

3 In re Gray, 115 USPQ 80 (Comm'r Pat. 1956).

1.136(a) are permitted. The reply should include a cover letter entitled "Renewed Petition Under 37 C.F.R. § 1.47(a)." This is not a final agency action within the meaning of 5 U.S.C § 704.

The renewed petition should indicate in a prominent manner that the attorney handling this matter is Paul Shanoski, and may be submitted by mail[4], hand-delivery[5], or facsimile[6].
If responding by mail, Petitioner's representative is advised not to place the undersigned's name on the envelope. Only the information that appears in the footnote should be included - the inclusion of any additional information will delay the delivery of the response to the undersigned.

Telephone inquiries regarding *this decision* should be directed to the undersigned at (571) 272-3225[7]. All other inquiries concerning examination procedures or status of the application should be directed to the Technology Center.

Paul Shanoski
Senior Attorney
Office of Petitions
United States Patent and Trademark Office

---

4 Mail Stop Petition, Commissioner for Patents, United States Patent and Trademark Office, P.O. Box 1450, Alexandria, VA, 22313-1450.
5 Customer Window, Randolph Building, 401 Dulaney Street, Alexandria, VA, 22314.
6 (571) 273-8300- please note this is a central facsimile number.
7 Petitioner will note that all practice before the Office should be in writing, and the action of the Office will be based exclusively on the written record in the Office. See 37 C.F.R. §1.2. As such, Petitioner is reminded that no telephone discussion may be controlling or considered authority for any further action(s) of Petitioner.

UNITED STATES PATENT AND TRADEMARK OFFICE

Commissioner for Patents
United States Patent and Trademark Office
P.O. Box 1450
Alexandria, VA 22313-1450
www.uspto.gov

Paper No. None

GATES & COOPER LLP
HOWARD HUGHES CENTER
6701 CENTER DRIVE WEST, SUITE 1050
LOS ANGELES CA 90045

COPY MAILED
SEP 28 2007
OFFICE OF PETITIONS

In re Application of :
Yunbing Wang, Udo Hoss, Rajv :
Shah, Jenn-Hann Larry Wang, :
William P. Van Antwerp, and :
Brooks B. Cochran :
Application No. 11/492,273 : DECISION ON RENEWED PETITION
Filed: July 25, 2006 : UNDER 37 C.F.R. § 1.47(A)
Attorney Docket No. G&C 130.81-US-01 :
Title: ANALYTE SENSORS AND METHODS FOR MAKING AND USING THEM :

This is in response to the renewed petition under 37 C.F.R. § 1.47(a)[1], filed July 25, 2007.

---

1 A grantable petition under 37 C.F.R. §1.47(a) requires:
(1) the petition fee of $200;
(2) a surcharge of either $65 or $130, if the petition is not filed at the time of filing the application, as set forth in 37 C.F.R. § 1.16(f);
(3) a statement of the last known address of the non-signing inventors;
(4) proof that either:
a) a copy of the entire application (specification, claims, drawings, and the oath or declaration) was sent or given to the non-signing inventor for review and proof that the non-signing inventor refuses to join in the application, or
b) the non-signing inventor cannot be found or reached after diligent effort, and a statement that these efforts were not successful, and;
(5) a declaration which complies with 37 C.F.R. § 1.63.

On July 25, 2006, the application was filed, identifying Yunbing Wang, Udo Hoss, Rajv Shah, Jenn-Hann Larry Wang, William P. Van Antwerp, and Brooks B. Cochran as joint inventors. The application was deposited without an executed declaration. On August 11, 2006, a "Notice to File Missing Parts of Nonprovisional Application - Filing Date Granted" (Notice) was mailed, notifying applicant that a fully executed oath or declaration and the surcharge associated with the late submission of the same were required. This Notice set a two-month period for reply.

An original petition was filed on October 13, 2006, and was dismissed via the mailing of a decision on June 21, 2007 for failing to meet requirements (4) and (5) of 37 C.F.R. § 1.47(a). Petitioner had submitted, *inter alia*, a declaration that had been executed by each of the joint inventors save Udo Hoss. The petition was dismissed since a complete copy of the application had not been sent to the last-known residential address of the non-signing inventor. Moreover, the decision noted that the declaration could not be accepted, as it was defective.

With this renewed petition, Petitioner has established that a complete copy of the application was sent to the legal representative of the non-signing inventor, and as such, requirement (4) of 37 C.F.R. § 1.47(a) has been met.

However, Petitioner has not met the fifth requirement of Rule §1.47(a). The decision on the original petition set forth, in pertinent part:

> Regarding the fifth requirement of Rule §1.47(a), the declaration that was submitted concurrently with the present petition cannot be accepted, as it is defective. The oath or declaration is defective because it does not state that the person making the oath or declaration acknowledges the duty to disclose to the Office all information known to the person to be material to patentability as defined in § 1.56. Instead of "material to patentability," it improperly states "material to the examination of this application," which has no meaning in the context of the rule.

With this renewed petition, it does not appear that this matter has been addressed.

It follows that this renewed petition must be **DISMISSED.**

Any second renewed petition must be submitted within **TWO MONTHS** from the mail date of this decision. Extensions of time under 37

C.F.R. § 1.136(a) are permitted. The reply should include a cover letter entitled "Second Renewed Petition Under 37 C.F.R. § 1.47(a)." This is not a final agency action within the meaning of 5 U.S.C § 704.

The renewed petition should indicate in a prominent manner that the attorney handling this matter is Paul Shanoski, and may be submitted by mail[2], hand-delivery[3], or facsimile[4]. Registered users of EFS-Web may alternatively submit a response to this decision via EFS-Web[5].

If responding by mail, Petitioner is advised not to place the undersigned's name on the envelope. Only the information that appears in the footnote should be included - the inclusion of any additional information will delay the delivery of the response to the undersigned.

Telephone inquiries regarding *this decision* should be directed to the undersigned at (571) 272-3225[6]. All other inquiries concerning examination procedures or status of the application should be directed to the Technology Center.

Paul Shanoski
Senior Attorney
Office of Petitions
United States Patent and Trademark Office

---

2 Mail Stop Petition, Commissioner for Patents, United States Patent and Trademark Office, P.O. Box 1450, Alexandria, VA, 22313-1450.
3 Customer Window, Randolph Building, 401 Dulaney Street, Alexandria, VA, 22314.
4 (571) 273-8300- please note this is a central facsimile number.
5 https://sportal.uspto.gov/authenticate/authenticateuserlocalepf.html
6 Petitioner will note that all practice before the Office should be in writing, and the action of the Office will be based exclusively on the written record in the Office. See 37 C.F.R. § 1.2. As such, Petitioner is reminded that no telephone discussion may be controlling or considered authority for any further action(s) of Petitioner.

UNITED STATES PATENT AND TRADEMARK OFFICE

COMMISSIONER FOR PATENTS
UNITED STATES PATENT AND TRADEMARK OFFICE
P.O. BOX 1450
ALEXANDRIA, VA 22313-1450
WWW.USPTO.GOV

Paper No.

GATES & COOPER LLP
HOWARD HUGHES CENTER
6701 CENTER DRIVE WEST, SUITE 1050
LOS ANGELES CA 90045

COPY MAILED

DEC 21 2007

OFFICE OF PETITIONS

In re Application of Yunbing Wang, Udo Hoss, Rajv Shah, Jenn-Hann Larry Wang, William P. Van Antwerp, and Brooks B. Cochran	
Application No. 11/492,273	DECISION ON SECOND RENEWED PETITION UNDER 37 C.F.R. § 1.47(A)
Filed: July 25, 2006	
Attorney Docket No. G&C 130.81-US-01	
Title: ANALYTE SENSORS AND METHODS FOR MAKING AND USING THEM	

This is in response to the second renewed petition under 37 C.F.R. § 1.47(a)[1], filed November 28, 2007.

---

1 A grantable petition under 37 C.F.R. §1.47(a) requires:
(1) the petition fee of $200;
(2) a surcharge of either $65 or $130, if the petition is not filed at the time of filing the application, as set forth in 37 C.F.R. § 1.16(f);
(3) a statement of the last known address of the non-signing inventors;
(4) proof that either:
a) a copy of the entire application (specification, claims, drawings, and the oath or declaration) was sent or given to the non-signing inventor for review and proof that the non-signing inventor refuses to join in the application, or
b) the non-signing inventor cannot be found or reached after diligent effort, and a statement that these efforts were not successful, and;
(5) a declaration which complies with 37 C.F.R. § 1.63.

On July 25, 2006, the application was filed, identifying Yunbing Wang, Udo Hoss, Rajv Shah, Jenn-Hann Larry Wang, William P. Van Antwerp, and Brooks B. Cochran as joint inventors. The application was deposited without an executed declaration. On August 11, 2006, a "Notice to File Missing Parts of Nonprovisional Application - Filing Date Granted" (Notice) was mailed, notifying applicant that a fully executed oath or declaration and the surcharge associated with the late submission of the same were required. This Notice set a two-month period for reply.

An original petition was filed on October 13, 2006, and was dismissed via the mailing of a decision on June 21, 2007 for failing to meet requirements (4) and (5) of 37 C.F.R. § 1.47(a). Petitioner had submitted, *inter alia*, a declaration that had been executed by each of the joint inventors save Udo Hoss. The petition was dismissed since a complete copy of the application had not been sent to the last-known residential address of the non-signing inventor. Moreover, the decision noted that the declaration could not be accepted, as it was defective.

A renewed petition was filed on July 25, 2007, which was dismissed via the mailing of a decision on September 28, 2007, for failure to address the deficient declaration.

With this second renewed petition, an acceptable declaration has been submitted.

Therefore, this renewed petition is **GRANTED** and this application is hereby accorded Rule § 1.47(a) status.

As provided in Rule § 1.47, this Office will forward notice of this application's filing to the non-signing inventor at the address given on the declaration. Notice of the filing of this application will also be published in the Official Gazette.

The Technology Center will be notified of this decision. The Technology Center's support staff will notify the Examiner of this decision, so that the present application can receive further processing in due course.

Telephone inquiries regarding *this decision* should be directed to the undersigned at (571) 272-3225[2]. All other inquiries

---

2 Petitioner will note that all practice before the Office should be in writing, and the action of the Office will be based exclusively on the written record in the Office. See 37 C.F.R. § 1.2. As such, Petitioner is reminded

concerning the status of the application should be directed to the Technology Center.

Paul Shanoski
Senior Attorney
Office of Petitions
United States Patent and Trademark Office

---

that no telephone discussion may be controlling or considered authority for any further action(s) of Petitioner.

UNITED STATES PATENT AND TRADEMARK OFFICE

UNITED STATES DEPARTMENT OF COMMERCE
United States Patent and Trademark Office
Address: COMMISSIONER FOR PATENTS
P.O. Box 1450
Alexandria, Virginia 22313-1450
www.uspto.gov

THE FARRELL LAW FIRM, LLP
290 Broadhollow Road
Suite 210E
Melville, NY 11747

Mail Date: 04/21/2010

Applicant	: Woo-Chul Cho	: DECISION ON REQUEST FOR
Patent Number	: 7610067	: RECALCULATION of PATENT
Issue Date	: 10/27/2009	: TERM ADJUSTMENT IN VIEW
Appliction No	: 11/492,292	: OF WYETH AND NOTICE OF INTENT TO
Filed	: 07/25/2006	: ISSUE CERTIFICATE OF CORRECTION
		:

The Request for Recalculation is **GRANTED** to the extent indicated.

The patent term adjustment has been determined to be **649** days. The USPTO will *sua sponte* issue a certificate of correction reflecting the amount of PTA days determined by the recalculation.

Prior to the issuance of the certificate of correction, the USPTO will afford patentee an opportunity to be heard and request reconsideration. Accordingly, patentee has **one month or thirty (30) days**, whichever is longer, to file a request for reconsideration of this patent term adjustment calculation. See 35 U.S.C. 154(b)(3)(B)(ii) and 37 CFR 1.322(a)(4). No extensions of time will be granted under 37 CFR 1.136.

Patentee should use document code PET.OP if electronically filing a request for reconsideration of this patent term adjustment calculation. The patentee must also include the information required by 37 CFR 1.705(b)(2) and the fee required by 37 CFR 1.18(e). If patentee does not file a timely request for reconsideration of this patent term adjustment calculation including the information required by 37 CFR 1.705(b)(2) and the fee required by 37 CFR 1.18(e), the USPTO will issue a certificate of correction reflecting the PTA determination noted above.

Patentee should be aware that in order to preserve the right to review in the United States District Court for the District of Columbia of the USPTO patent term adjustment determination, patentee must ensure that he or she also take the steps required under 35 U.S.C. 154(b)(4)(A) in a timely manner. Nothing in the request for recalculation should be construed as providing an alternative time frame for commencing a civil action under 35 U.S.C. 154(b)(4)(A).

Any questions concerning this decision should be directed to the Office of Patent Legal Administration at 571-272-7702.

UNITED STATES PATENT AND TRADEMARK OFFICE

Commissioner for Patents
United States Patent and Trademark Office
P.O. Box 1450
Alexandria, VA22313-1450
www.uspto.gov

WARN, HOFFMANN, MILLER & OZGA, P.C.
P.O. BOX 70098
ROCHESTER HILLS MI 48307

In re Application of :
BUSATO, MURRAY et al :
Appl. No.: 11/492,295 : DECISION ON PETITION
Filed: Jul. 25, 2006 :
For: VALVE HAVING CONTAMINATION :
COUNTER-MEASURES :

This is a decision on the petition filed on Mar. 24, 2008 by which petitioner request withdrawal of the finality of the Office action dated Jan. 24, 2008. The petition is considered pursuant to 37 CFR 1.181 and no fee is required.

The petition is granted.

In the petition, petitioner argues that in response to the Appeal Brief Nov. 28, 2007, the examiner re-opened prosecution by issuing a final rejection with new grounds on Jan. 24, 2008, which contains a few minor changes in the rejection. In particular, petitioner disputes the propriety of the finality of the office action mailed Jan. 24, 2008. The finality of the office action is not in compliance with MPEP § 1207.03. Petitioner argues that the examiner should have issued a non-final Office because the final rejection of Jan. 24, 2008 was not necessitated by any amendment to the claims and only necessitated by the appeal brief of Nov. 28, 2007.

In finding petitioner's points of argument persuasive, the requested relief is granted. The finality of the last Office action mailed Jan. 24, 2008 is hereby withdrawn. The period to respond to the last Office action of Jan. 24, 2008 remains unchanged. The examiner has been directed to treat the applicant's response to the outstanding Office action of Jan. 24, 2008 as 37 CFR § 1.111 amendment.

Any inquiry regarding this decision should be directed to Henry C. Yuen, Special Programs Examiner, at (571) 272-4856.

PETITION GRANTED.

Karen M. Young, Director
Technology Center 3700

UNITED STATES PATENT AND TRADEMARK OFFICE

Commissioner for Patents
United States Patent and Trademark Office
P.O. Box 1450
Alexandria, VA 22313-1450
www.uspto.gov

SHUMAKER & SIEFFERT, P. A.
1625 RADIO DRIVE
SUITE 300
WOODBURY MN 55125

COPY MAILED

MAR 16 2007

OFFICE OF PETITIONS

In re Application of :
Daron Duane Meyer et al. :
Application No. 11/492,303 : DECISION ACCORDING STATUS
Filed: July 25, 2006 : UNDER 37 CFR 1.47(a)
Attorney Docket No. 1017-030US01 :

This is in response to the petition filed February 12, 2007 under 37 CFR 1.47(a).

The petition under 37 CFR 1.47(a) is **GRANTED**.

The above-identified application was filed on July 25, 2006 without an executed oath or declaration. Accordingly, on August 11, 2006, a "Notice To File Missing Parts of Application" was mailed, requiring *inter alia* a properly executed oath or declaration.

In response, the instant petition under 37 CFR 1.47(a), an oath or declaration signed by all named inventors except joint inventor Meyer, fees and a request for a four month extension of time were filed. The petition argues that joint inventor Meyer refuses to cooperate with the filing of the instant application.

A grantable petition under 37 CFR 1.47(a) requires: (1) proof that the non-signing inventor cannot be reached or refuses to sign the oath or declaration after having been presented with the application papers (specification, claims and drawings); (2) an acceptable oath or declaration in compliance with 35 U.S.C. §§ 115 and 116; (3) the petition fee; and (4) a statement of the last known address of the non-signing inventor.

The petition indicates that the application materials were forwarded to Mr. Meyer by way of email and again by United States Postal Service Certified Mail, that the materials were received by Mr. Meyer and that Mr. Meyer, by email, has expressly refused to execute the oath or declaration, on advice of counsel. The petition therefore bears proof that the application papers were presented to Mr. Meyer and that in addition to an express refusal, he has also not returned an executed copy to the petitioners.

The above-identified application and papers have been reviewed and found in compliance with 37 CFR 1.47(a). In view thereof, this application is hereby accorded Rule 1.47(a) status.

Thus, as provided in Rule 1.47c, this Office will forward notice of this application's filing to the non-signing inventor at the address given in the petition. Notice of the filing of this application will also be published in the Official Gazette.

This matter is being referred to the Office of Initial Patent Examination for further pre-examination processing.

Telephone inquiries concerning this matter may be directed to the undersigned Petitions Attorney at (571) 272-3212.

Patricia Faison-Ball

Patricia Faison-Ball
Senior Petitions Attorney
Office of Petitions

UNITED STATES PATENT AND TRADEMARK OFFICE

Commissioner for Patents
United States Patent and Trademark Office
P.O. Box 1450
Alexandria, VA 22313-1450
www.uspto.gov

PATTERSON & SHERIDAN, LLP
3040 POST OAK BOULEVARD, SUITE 1500
HOUSTON TX 77056

COPY MAILED

FEB 2 0 2007

OFFICE OF PETITIONS

In re Application of :
Kanuri, et al. : ON PETITION
Application No.: 11/492,316 :
Filed: July 25, 2006 :
Attorney Docket No.: 010529 USA MTCG/EPIC :

This is a decision on the petition under 37 CFR 1.47(a), filed January 11, 2007.

The petition is **DISMISSED**.

Any request for reconsideration of this decision must be submitted within TWO (2) MONTHS from the mail date of this decision. Extensions of time under 37 CFR 1.136(a) are permitted. Any response should be entitled "Request for Reconsideration of Petition Under 37 CFR 1.47(a)" and may include an oath or declaration executed by the inventor. **Failure to respond will result in abandonment of the application.**

The above-identified application was filed on July 25, 2006. On August 11, 2006, the Office mailed a Notice to File Missing Parts of Nonprovisional Application, requiring applicants to submit an executed declaration and a surcharge for its late filing. On January 11, 2007, petitioners filed, *inter alia*, a petition for a three month extension of time and required fee, a petition under 37 CFR 1.47(a) and required fee, the surcharge, and a declaration signed by three of four joint inventors. The petition states that a copy of the application, an assignment, and a declaration were mailed to non-signing inventor Rajest Kanuri for his signature and that Mr. Kanuri did not return executed documents. The FEDEX tracking information provided with the petition appears to indicate that the September 20, 2006 package was returned to the shipper due to an incorrect address being listed on the package.

A grantable petition under 37 CFR 1.47(a) requires:

(1) a petition including proof of the pertinent facts establishing that the joint inventor(s) refuses to join, or cannot be found or reached after diligent effort,
(2) a proper oath or Declaration executed by the available joint inventor(s),
(3) the petition fee of $200, and

(4) the last known address of the omitted inventor(s).

This petition lacks item (1) above.

As to item (1), applicants have failed to establish that the inventor cannot be reached.

A showing of **diligence** is critical in obtaining Rule 47 status when an inventor cannot be located or reached. One returned mailing does not rise to the level of diligence required to obtain Rule 47 status.

Petitioners should engage in further efforts to locate Mr. Kanuri. The following is a list of evidentiary sources that are commonly relied upon to prove inability to locate an inventor: searches of Internet databases; inquiries of local telephone directories; telegrams; and documented inquiries of last known employers. Every listed type of search need not be done. However, a diligent effort to find the inventor must be made.

Attorney Mulcahy stated in the petition that he conducted Internet searches for Mr. Kanuri as late as December 12, 2006, but has provided no documentary evidence of the searches. Documentary evidence is required. Parties with first hand knowledge of the efforts to locate the non-signing inventors must provide statements.

Further correspondence with respect to this matter should be addressed as follows:

By mail: Mail Stop PETITION
Commissioner for Patents
Post Office Box 1450
Alexandria, VA 22313-1450

By hand: U.S. Patent and Trademark Office
Customer Service Window, Mail Stop Petition
Randolph Building
401 Dulany Street
Alexandria, VA 22314

By FAX: (571) 273-8300 - ATTN: Office of Petitions

Telephone inquiries should be directed to the undersigned at (571) 272-3230.

Shirene Willis Brantley

Shirene Willis Brantley
Senior Petitions Attorney
Office of Petitions

UNITED STATES PATENT AND TRADEMARK OFFICE

Commissioner for Patents
United States Patent and Trademark Office
P.O. Box 1450
Alexandria, VA 22313-1450
www.uspto.gov

PATTERSON & SHERIDAN, LLP
3040 POST OAK BOULEVARD, SUITE 1500
HOUSTON TX 77056

COPY MAILED

MAY 17 2007

OFFICE OF PETITIONS

In re Application of :
Kanuri, et al. : ON PETITION
Application No.: 11/492,316 :
Filed: July 25, 2006 :
Attorney Docket No.: 010529 USA MTCG/EPIC :

Papers filed on April 20, 2007 in reply to a decision refusing status under 37 CFR 1.47(a), mailed on February 20, 2007, included a Declaration signed by the previously nonsigning inventor, Rajesh Kanuri, in compliance with 37 CFR 1.63.

In view of the joinder of the inventor, further consideration under 37 CFR 1.47(a) is moot; this application does not have any rule 1.47(a) status and no such status should appear on the file wrapper. This application need not be returned to this office for any further consideration under 37 CFR 1.47(a).

After the mailing of this decision, the application will be returned to the Office of Initial Patent Examination for further processing.

Telephone inquiries should be directed to the undersigned at (571) 272-3230.

Shirene Willis Brantley

Shirene Willis Brantley
Senior Petitions Attorney
Office of Petitions

UNITED STATES PATENT AND TRADEMARK OFFICE

COMMISSIONER FOR PATENTS
UNITED STATES PATENT AND TRADEMARK OFFICE
P.O. BOX 1450
ALEXANDRIA, VA 22313-1450
www.uspto.gov

KNOBBE MARTENS OLSON BEAR, LLP
2040 MAIN STREET
FOURTEENTH FLOOR
IRVINE, CA 92614

COPY MAILED

JAN 08 2009

Applicant: Taylor
Appl. No.: 11/492,342
Filing Date: July 25, 2006
Title: MULTI LAYER STRUCTURES FOR PARAMETER MEASUREMENT
Attorney Docket: MICRON.350A
Pub. No.: US 2008/0029913 A1
Pub. Date: February 7, 2008

This is a decision on the request for a corrected patent application publication under 37 CFR 1.221(b), received on March 28, 2008 for the above-identified application.

The request is DISMISSED.

Applicant requests that the application be republished because the patent application publication contains a material error on the front page of the publication wherein "Structures" is misprinted as "Structure" in the title of the invention.

37 CFR 1.221 (b) is applicable "only when the Office makes a material mistake which is apparent from Office records.... Any request for a corrected publication or revised patent application publication other than provided as provided in paragraph (a) of this section must be filed within two months from the date of the patent application publication. This period is not extendable." A material mistake must affect the public's ability to appreciate the technical disclosure of the patent application publication, to determine the scope of the patent application publication, or to determine the scope of the provisional rights that an applicant may seek to enforce upon issuance of a patent. [1]

The error on the front page of the publication wherein "Structures" is misprinted as "Structure" in the title of the invention is not an Office error. The application was published with the title listed on the specification. Furthermore the change in the title does not affect the understanding of the application. The mistake does not affect the public's ability to appreciate the technical disclosure of the patent application publication, or determine the scope of the patent application publication or determine the scope of the provisional rights that an applicant may seek to enforce upon issuance of a patent.

[1] Changes to Implement Eighteen-Month Publication of Patent Applications, 65 FR 57023, 57038 (Sept. 20, 2000), 1239, Off. Gaz. Pat. Office Notices 63, 75 (Oct. 10, 2000) (final rule).

Applicant is reminded of his duty to conduct a reasonable inquiry before filing a paper before the Office. See MPEP 410.

Applicants' request for a corrected patent application publication on January 31, 2008, may constitute a "failure to engage in reasonable efforts to conclude processing or examination of the application." See 1.704(c). This determination will be made on or after a mailing of a Notice of Allowance.

The applicant is advised that a "request for republication of an application previously published" may be filed under 37 CFR 1.221 (a). Such a request for republication "must include a copy of the application compliance with the Office's electronic filing system requirements and be accompanied by the publication fee set forth in § 1.18 (d) and the processing fee set forth in § 1.17 (i)." If the request for republication does not comply with the electronic filing system requirements, the republication will not take place and the publication fee set forth in § 1.18 (d) will be refunded. The processing fee will be retained.

Any request for republication under 37 CFR 1.221(a), must be submitted via the EFS system, as a "Pre-Grant Publication" and questions or request for reconsideration of the decision, should be addressed as follows:

By mail to: Mail Stop PGPUB
Commissioner for Patents
P.O. Box 1450
Alexandria, Va. 22313-1450

Inquiries relating to this matter may be directed to Michael Cygan at (571) 272-7700, or the undersigned at (571) 272-7709.

Mark Polutta
Senior Legal Advisor
Office of Patent Legal Administration
Office of the Deputy Commissioner
for Patent Examination Policy

UNITED STATES PATENT AND TRADEMARK OFFICE

UNITED STATES DEPARTMENT OF COMMERCE
United States Patent and Trademark Office
Address: COMMISSIONER FOR PATENTS
P.O. Box 1450
Alexandria, Virginia 22313-1450
www.uspto.gov

KNOBBE MARTENS OLSON & BEAR LLP
2040 MAIN STREET
FOURTEENTH FLOOR
IRVINE, CA 92614

Mail Date: 04/20/2010

Applicant	: Ted L. Taylor	: DECISION ON REQUEST FOR
Patent Number	: 7642550	: RECALCULATION of PATENT
Issue Date	: 01/05/2010	: TERM ADJUSTMENT IN VIEW
Appliction No	: 11/492,342	: OF WYETH AND NOTICE OF INTENT TO
Filed	: 07/25/2006	: ISSUE CERTIFICATE OF CORRECTION
		:

The Request for Recalculation is **GRANTED** to the extent indicated.

The patent term adjustment has been determined to be **415** days. The USPTO will *sua sponte* issue a certificate of correction reflecting the amount of PTA days determined by the recalculation.

Prior to the issuance of the certificate of correction, the USPTO will afford patentee an opportunity to be heard and request reconsideration. Accordingly, patentee has **one month or thirty (30) days**, whichever is longer, to file a request for reconsideration of this patent term adjustment calculation. See 35 U.S.C. 154(b)(3)(B)(ii) and 37 CFR 1.322(a)(4). No extensions of time will be granted under 37 CFR 1.136.

Patentee should use document code PET.OP if electronically filing a request for reconsideration of this patent term adjustment calculation. The patentee must also include the information required by 37 CFR 1.705(b)(2) and the fee required by 37 CFR 1.18(e). If patentee does not file a timely request for reconsideration of this patent term adjustment calculation including the information required by 37 CFR 1.705(b)(2) and the fee required by 37 CFR 1.18(e), the USPTO will issue a certificate of correction reflecting the PTA determination noted above.

Patentee should be aware that in order to preserve the right to review in the United States District Court for the District of Columbia of the USPTO patent term adjustment determination, patentee must ensure that he or she also take the steps required under 35 U.S.C. 154(b)(4)(A) in a timely manner. Nothing in the request for recalculation should be construed as providing an alternative time frame for commencing a civil action under 35 U.S.C. 154(b)(4)(A).

Any questions concerning this decision should be directed to the Office of Patent Legal Administration at 571-272-7702.

UNITED STATES PATENT AND TRADEMARK OFFICE

Commissioner for Patents
United States Patent and Trademark Office
P.O. Box 1450
Alexandria, VA 22313-1450
www.uspto.gov

AGILENT TECHNOLOGIES INC.
INTELLECTUAL PROPERTY ADMINISTRATION,LEGAL DEPT.
MS BLDG. E P.O. BOX 7599
LOVELAND CO 80537

OCT 19 2007

In re Application of :
Amitabh Shukla et al :
Serial No.: 11/492,377 : PETITION DECISION
Filed: July 24, 2006 :
Attorney Docket No.: 10060632-1 :

This is a decision on the PETITION FOR ACCEPTANCE OF COLOR DRAWINGS UNDER 37 CFR 1.84(a)(2). The petition was filed July 24, 2006. Entry of color drawings requires: 1) three sets of the color drawings, 2) a proper amendment to the specification indicating color photographs or drawings are present in the file, and 3) the required fee under 37 CFR 1.17(h).

A review of the application record indicates that the petition meets all of the requirements for acceptance of color drawings. This is not to be construed that all of the drawings are accepted, only that the color drawings are acceptable.

The petition is **GRANTED**.

Should there be any questions with respect to this decision, please contact William R. Dixon, Jr., by mail addressed to: Director, Technology Center 1600, at the address listed above, or by telephone at 571-272-0519 or by facsimile transmission at 571-273-8300.

William R. Dixon, Jr.
Special Program Examiner
Technology Center 1600

UNITED STATES PATENT AND TRADEMARK OFFICE

UNITED STATES DEPARTMENT OF COMMERCE
United States Patent and Trademark Office
Address: COMMISSIONER FOR PATENTS
P.O. Box 1450
Alexandria, Virginia 22313-1450
www.uspto.gov

F. CHAU & ASSOCIATES, LLC
130 WOODBURY ROAD
WOODBURY, NY 11797

Mail Date: 04/20/2010

Applicant	: Yeong-Beom Lee	: DECISION ON REQUEST FOR
Patent Number	: 7595855	: RECALCULATION of PATENT
Issue Date	: 09/29/2009	: TERM ADJUSTMENT IN VIEW
Appliction No	: 11/492,424	: OF WYETH AND NOTICE OF INTENT TO
Filed	: 07/25/2006	: ISSUE CERTIFICATE OF CORRECTION
		:

The Request for Recalculation is **GRANTED** to the extent indicated.

The patent term adjustment has been determined to be **231** days. The USPTO will *sua sponte* issue a certificate of correction reflecting the amount of PTA days determined by the recalculation.

Prior to the issuance of the certificate of correction, the USPTO will afford patentee an opportunity to be heard and request reconsideration. Accordingly, patentee has **one month or thirty (30) days**, whichever is longer, to file a request for reconsideration of this patent term adjustment calculation. See 35 U.S.C. 154(b)(3)(B)(ii) and 37 CFR 1.322(a)(4). No extensions of time will be granted under 37 CFR 1.136.

Patentee should use document code PET.OP if electronically filing a request for reconsideration of this patent term adjustment calculation. The patentee must also include the information required by 37 CFR 1.705(b)(2) and the fee required by 37 CFR 1.18(e). If patentee does not file a timely request for reconsideration of this patent term adjustment calculation including the information required by 37 CFR 1.705(b)(2) and the fee required by 37 CFR 1.18(e), the USPTO will issue a certificate of correction reflecting the PTA determination noted above.

Patentee should be aware that in order to preserve the right to review in the United States District Court for the District of Columbia of the USPTO patent term adjustment determination, patentee must ensure that he or she also take the steps required under 35 U.S.C. 154(b)(4)(A) in a timely manner. Nothing in the request for recalculation should be construed as providing an alternative time frame for commencing a civil action under 35 U.S.C. 154(b)(4)(A).

Any questions concerning this decision should be directed to the Office of Patent Legal Administration at 571-272-7702.

UNITED STATES PATENT AND TRADEMARK OFFICE

COMMISSIONER FOR PATENTS
UNITED STATES PATENT AND TRADEMARK OFFICE
P.O. BOX 1450
ALEXANDRIA, VA 22313-1450
www.uspto.gov

GIFFORD, KRASS, SPRINKLE,
ANDERSON & CITKOWSKI, P.C.
P.O. BOX 7021
TROY, MI 48007-7021

COPY MAILED

FEB 0 2 2007

OFFICE OF PETITIONS

In re Application of :
Teng-Hua, et al. :
Application No. 11/492,427 : ON PETITION
Filed: July 25, 2006 :
Attorney Docket No. TTC-21803/08 :

This is a decision on the petition under 37 CFR 1.313, filed January 26,2007 to withdraw the above-identified application from issue after payment of the issue fee.

The petition is **DISMISSED**.

Petitioner requests that the application be withdrawn from issue in order to consider a change in inventorship. However, 37 CFR 1.313(c) provides that:

Once the issue fee has been paid, the application will not be withdrawn from issue upon petition by the applicant for any reason except:

(1) Unpatentability of one of more claims, which petition must be accompanied by an unequivocal statement that one or more claims are unpatentable, an amendment to such claim or claims, and an explanation as to how the amendment causes such claim or claims to be patentable;

(2) Consideration of a submission pursuant to 37 CFR 1.114; or

(3) Express abandonment of the application. Such express abandonment may be in favor of a continuing application.

See Changes to Application Examination and Provisional Application Practice, Interim Rule, 65 Fed. Reg. 14865, 14873 (Mar. 20, 2000), 1233 Off. Gaz. Pat. Office 47, 54 (Apr. 11, 2000).

Upon payment of the issue fee, an application will not be withdrawn from issue upon petition except for the reasons enumerated in 37 CFR 1.313(c). The circumstances of the above-identified application do not fall within any of those exceptions.

For the reason stated above, the petition under 37 CFR 1.313(c) cannot be granted.

Petitioner is reminded that the filing of any renewed petition to withdraw from issue may not be recognized or effective if not received by the appropriate deciding official in time to act prior to issuance. *Note* 37 CFR 1.313(d). It is recommended that the facsimile number listed below be used to file the renewed petition.

Further correspondence with respect to this matter should be addressed as follows:

By mail: Mail Stop PETITIONS
Commissioner for Patents
Post Office Box 1450
Alexandria, VA 22313-1450

By hand: Customer Service Window
Mail Stop Petitions
Randolph Building
401 Dulany Street
Alexandria, VA 22314

By fax: **(571) 273-0025**
Office of Petitions

Telephone inquires related to this decision should be directed to the undersigned at (571) 272-3204.

Sherry D. Brinkley
Petitions Examiner
Office of Petitions

UNITED STATES PATENT AND TRADEMARK OFFICE

COMMISSIONER FOR PATENTS
UNITED STATES PATENT AND TRADEMARK OFFICE
P.O. BOX 1450
ALEXANDRIA, VA 22313-1450
www.uspto.gov

GIFFORD, KRASS, SPRINKLE,
ANDERSON & CITKOWSKI, P.C.
P.O. BOX 7021
TROY, MI 48007-7021

COPY MAILED

FEB 20 2007

OFFICE OF PETITIONS

In re Application of :
Teng-Hua Shieh :
Application No.: 11/492,427 : ON PETITION
Filed: July 25, 2006 :
Attorney Docket No.: TTC-21803/08 :

This is a decision in response to the petition filed February 9, 2007, which is being treated as a renewed petition under 37 CFR 1.313(c)(2) to withdraw the above-identified application from issue after payment of the issue fee.

The petition is **GRANTED**.

The above-identified application is withdrawn from issue for consideration of a submission under 37 CFR 1.114 (request for continued examination). See 37 CFR 1.313(c)(2).

Petitioner is advised that the issue fee paid on January 25, 2007, in the above-identified application, cannot be refunded. If, however, the above-identified application is again allowed, petitioner may request that it be applied towards the issue fee required by the new Notice of Allowance. [1]

Telephone inquiries relating to this decision should be directed to the undersigned at (571) 272-3204.

The application is being referred to Technology Center AU 3747 for further processing of the request for continued examination under 37 CFR 1.114, including consideration of the request for correction of inventorship under 37 CFR 1.48.

Sherry D. Brinkley
Petitions Examiner
Office of Petitions

[1] *The request to apply the issue fee to the new Notice may be satisfied by completing and returning the new Part B - Fee(s) Transmittal Form (along with any balance due at the time of submission). Petitioner is advised that the Issue Fee Transmittal Form must be completed and timely submitted to avoid abandonment of the application.*

UNITED STATES PATENT AND TRADEMARK OFFICE

Commissioner for Patents
United States Patent and Trademark Office
P.O. Box 1450
Alexandria, VA 22313-1450
www.uspto.gov

HEWLETT PACKARD COMPANY
P.O. BOX 272400, 3404 E. HARMONY ROAD
INTELLECTUAL PROPERTY ADMINISTRATION
FORT COLLIN SCO 80527-2400

COPY MAILED

FEB 04 2008

OFFICE OF PETITIONS

In re Application of :
Gidi Amir et al :
Application No. 11/492,447 : ON PETITION
Filed: July 25, 2006 :
Attorney Docket No. 200600770-1 :

This is a decision on the petition under 37 CFR 1.137(b), filed July 12, 2007, to revive the above-identified application.

The petition is **DISMISSED.**

Any request for reconsideration of this decision must be submitted within TWO (2) MONTHS from the mail date of this decision. Extensions of time under 37 CFR 1.136(a) are permitted. The reconsideration request should include a cover letter entitled "Renewed Petition under 37 CFR 1.137(b)." This is **not** a final agency action within the meaning of 5 U.S.C. § 704.

A grantable petition under 37 CFR 1.137(b)[1] must be accompanied by: (1) the required reply,[2] unless previously filed; (2) the petition fee as set forth in 37 CFR 1.17(m); (3) a statement that the entire delay in filing the required reply from the due date for the reply until the filing of a grantable petition pursuant to 37 CFR 1.137(b) was unintentional; and (4) any terminal disclaimer (and fee as set forth in 37 CFR 1.20(d)) required by

---

[1] As amended effective December 1, 1997. See Changes to Patent Practice and Procedure; Final Rule Notice, 62 Fed. Reg. 53131, 53194-95 (October 10, 1997), 1203 Off. Gaz. Pat. Office 63, 119-20 (October 21, 1997).

[2] In a nonprovisional application abandoned for failure to prosecute, the required reply may be met by the filing of a continuing application. In an application or patent, abandoned or lapsed for failure to pay the issue fee or any portion thereof, the required reply must be the payment of the issue fee or any outstanding balance thereof.

37 CFR 1.137(c). Where there is a question as to whether either the abandonment or the delay in filing a petition under 37 CFR 1.137 was unintentional, the Commissioner may require additional information. See MPEP 711.03(c)(III)(C) and (D). The instant petition lacks item(s)(1).

The citizenship of inventors, Amir, Ruckenstein and Shaked is listed as IL.

There is no indication that the person signing the petition was ever given a power of attorney or authorization of agent to prosecute the application. If the person signing the petition desires to receive future correspondence regarding this application, the appropriate power of attorney or authorization of agent must be submitted. While a courtesy copy of this decision is being mailed to the person signing the petition, all future correspondence will be directed to the address currently of record until appropriate instructions are received.

Further correspondence with respect to this matter should be addressed as follows:

By mail: Mail Stop PETITIONS
Commissioner for Patents
Post Office Box 1450
Alexandria, VA 22313-1450

By hand: Customer Window located at:

Randolph Building
401 Dulany Street
Alexandria, VA 22314

By fax: (571) 273-8300
ATTN: Office of Petitions

Telephone inquiries concerning this decision should be directed to the undersigned at (571) 272-3208.

Karen Creasy

Karen Creasy
Petitions Examiner
Office of Petitions

cc:

DAVID S. THOMPSON
421 WEST RIVERSIDE, SUITE 500
SPOKANE, WA 99201

UNITED STATES PATENT AND TRADEMARK OFFICE

Commissioner for Patents
United States Patent and Trademark Office
P.O. Box 1450
Alexandria, VA 22313-1450
www.uspto.gov

HEWLETT PACKARD COMPANY
PO BOX 272400, 3404 E. HARMONY ROAD
INTELLECTUAL PROPERTY ADMINISTRATION
FORT COLLINS CO 80527-2400

COPY MAILED

AUG 26 2008

OFFICE OF PETITIONS

In re Application of	:	
Gidi Amir et al	:	
Application No. 11/492,447	:	DECISION GRANTING PETITION
Filed: July 25, 2006	:	UNDER 37 CFR 1.137(b)
Attorney Docket No. 200600770-1	:	

This is a decision on the renewed petition under 37 CFR 1.137(b), filed May 2, 2008, to revive the above-identified application.

The petition is **GRANTED**.

The petition satisfies the conditions for revival pursuant to the provisions of 37 CFR 1.137(b) in that (1) the reply in the form of an executed declaration and surcharge fee; (2) the petition fee; and (3) the required statement of unintentional delay have been received. Accordingly, the reply to the Notice To File Missing Parts Of Nonprovisional Application mailed August 10, 2006, is accepted as having been unintentionally delayed.

Telephone inquiries concerning this decision should be directed to the undersigned at (571) 272-3208.

This matter is being referred to the Office of Application Processing to consider the reply received May 2, 2008.

Karen Creasy

Karen Creasy
Petitions Examiner
Office of Petitions

UNITED STATES PATENT AND TRADEMARK OFFICE

UNITED STATES DEPARTMENT OF COMMERCE
United States Patent and Trademark Office
Address: COMMISSIONER FOR PATENTS
P.O. Box 1450
Alexandria, Virginia 22313-1450
www.uspto.gov

HOFFMANN & BARON, LLP
6900 JERICHO TURNPIKE
SYOSSET, NY 11791

Mail Date: 04/21/2010

Applicant	: Michael Ferretti	: DECISION ON REQUEST FOR
Patent Number	: 7618299	: RECALCULATION of PATENT
Issue Date	: 11/17/2009	: TERM ADJUSTMENT IN VIEW
Appliction No	: 11/492,463	: OF WYETH AND NOTICE OF INTENT TO
Filed	: 07/25/2006	: ISSUE CERTIFICATE OF CORRECTION
		:

The Request for Recalculation is **GRANTED** to the extent indicated.

The patent term adjustment has been determined to be **0** days. The USPTO will *sua sponte* issue a certificate of correction reflecting the amount of PTA days determined by the recalculation.

Prior to the issuance of the certificate of correction, the USPTO will afford patentee an opportunity to be heard and request reconsideration. Accordingly, patentee has **one month or thirty (30) days**, whichever is longer, to file a request for reconsideration of this patent term adjustment calculation. See 35 U.S.C. 154(b)(3)(B)(ii) and 37 CFR 1.322(a)(4). No extensions of time will be granted under 37 CFR 1.136.

Patentee should use document code PET.OP if electronically filing a request for reconsideration of this patent term adjustment calculation. The patentee must also include the information required by 37 CFR 1.705(b)(2) and the fee required by 37 CFR 1.18(e). If patentee does not file a timely request for reconsideration of this patent term adjustment calculation including the information required by 37 CFR 1.705(b)(2) and the fee required by 37 CFR 1.18(e), the USPTO will issue a certificate of correction reflecting the PTA determination noted above.

Patentee should be aware that in order to preserve the right to review in the United States District Court for the District of Columbia of the USPTO patent term adjustment determination, patentee must ensure that he or she also take the steps required under 35 U.S.C. 154(b)(4)(A) in a timely manner. Nothing in the request for recalculation should be construed as providing an alternative time frame for commencing a civil action under 35 U.S.C. 154(b)(4)(A).

Any questions concerning this decision should be directed to the Office of Patent Legal Administration at 571-272-7702.

UNITED STATES PATENT AND TRADEMARK OFFICE

Commissioner for Patents
United States Patent and Trademark Office
P.O. Box 1450
Alexandria, VA 22313-1450
www.uspto.gov

SYNNESTVEDT & LECHNER, LLP
1101 MARKET STREET, SUITE 2600
PHILADELPHIA PA 19107-2950

COPY MAILED

JUN 16 2008

In re Application of :
RAMAEKERS, Joseph C. :
Application No. 11/492,464 : DECISION ON PETITION
Filed: July 24, 2006 : TO MAKE SPECIAL UNDER
Attorney Docket No. **P33671-C USA** : 37 CFR 1.102(c)(1)
:

This is a decision on the petition under 37 CFR 1.102(c)(1), filed May 27, 2008 to make the above-identified application special based on applicant's age as set forth in M.P.E.P. § 708.02, Section IV.

The petition is **GRANTED.**

A grantable petition to make an application special under 37 CFR 1.102(c)(1) and MPEP § 708.02, Section IV: Applicant's Age must be accompanied by evidence showing that at least one of the applicants is 65 years of age, or more, such as a birth certificate or a statement by applicant. No fee is required

The instant petition includes the certification by registered attorney Peter J. Butch, III attesting to the age of inventor Nick Kostandaras. Accordingly, the above-identified application has been accorded "special" status.

Inquiries concerning either the examination or status of the application should be directed to the Technology Center at 571-272-1600.

Telephone inquiries concerning this decision should be directed to the undersigned at 571-272-7253.

The application is being forwarded to the Technology Center Art Unit 1615 for action on the merits commensurate with this decision.

Monica A. Graves
Petitions Examiner
Office of Petitions

UNITED STATES PATENT AND TRADEMARK OFFICE

Commissioner for Patents
United States Patent and Trademark Office
P.O. Box 1450
Alexandria, VA 22313-1450
www.uspto.gov

SYNNESTVEDT & LECHNER, LLP
1101 MARKET STREET, SUITE 2600
PHILADELPHIA PA 19107-2950

COPY MAILED

AUG 0 1 2008

OFFICE OF PETITIONS

In re Application of :
RAMAEKERS, Joseph C. :
Application No. 11/492,464 : DECISION ON PETITION
Filed: July 24, 2006 : TO MAKE SPECIAL UNDER
Attorney Docket No. **P33671-C USA** : 37 CFR 1.102(c)(1)
:

CORRECTED DECISION

This is a decision on the petition under 37 CFR 1.102(c)(1), filed May 27, 2008 to make the above-identified application special based on applicant's age as set forth in M.P.E.P. § 708.02, Section IV.

The petition is **GRANTED.**

A grantable petition to make an application special under 37 CFR 1.102(c)(1) and MPEP § 708.02, Section IV: Applicant's Age must be accompanied by evidence showing that at least one of the applicants is 65 years of age, or more, such as a birth certificate or a statement by applicant. No fee is required

The instant petition includes the certification by registered attorney Peter J. Butch, III, attesting to the age of inventor Joseph C. Ramaekers. Accordingly, the above-identified application has been accorded "special" status.

Inquiries concerning either the examination or status of the application should be directed to the Technology Center at 571-272-1600.

Telephone inquiries concerning this decision should be directed to the undersigned at 571-272-7253.

The application is being forwarded to the Technology Center Art Unit 1615 for action on the merits commensurate with this decision.

Monica A. Graves
Petitions Examiner
Office of Petitions

SPE RESPONSE FOR CERTIFICATE OF CORRECTION

Paper No.: _____

DATE : 10/30/09

TO SPE OF : ART UNIT 2824

SUBJECT : Request for Certificate of Correction for Appl. No.: 11492473 Patent No.: 7602069

Please respond to this request for a certificate of correction within 7 days.

FOR IFW FILES:

Please review the requested changes/corrections as shown in the **COCIN** document(s) in the IFW application image. No new matter should be introduced, nor should the scope or meaning of the claims be changed.

Please complete the response (see below) and forward the completed response to scanning using document code **COCX**.

FOR PAPER FILES:

Please review the requested changes/corrections as shown in the attached certificate of correction. Please complete this form (see below) and forward it with the file to:

Certificates of Correction Branch (C of C)
Randolph Square 9D40-D
Palm Location 7580
[redacted]

Lamonte Newsome
Certificates of Correction Branch
703-756-1574

Thank You For Your Assistance

The request for issuing the above-identified correction(s) is hereby:
Note your decision on the appropriate box.

- ☒ **Approved** — All changes apply.
- ☐ **Approved in Part** — Specify below which changes **do not** apply.
- ☐ **Denied** — State the reasons for denial below.

Comments: ML 11/3/09

RICHARD T. ELMS
SUPERVISORY PATENT EXAMINER
TECHNOLOGY CENTER 2800

AU 2824 11/3/09

SPE RESPONSE FOR CERTIFICATE OF CORRECTION

Paper No.: 11/3/09

DATE : 10/30/09

TO SPE OF : ART UNIT 2824

SUBJECT : Request for Certificate of Correction for Appl. No.: 11492473 Patent No.: 7602069

Please respond to this request for a certificate of correction within 7 days.

FOR IFW FILES:

Please review the requested changes/corrections as shown in the **COCIN** document(s) in the IFW application image. No new matter should be introduced, nor should the scope or meaning of the claims be changed.

Please complete the response (see below) and forward the completed response to scanning using document code **COCX**.

FOR PAPER FILES:

Please review the requested changes/corrections as shown in the attached certificate of correction. Please complete this form (see below) and forward it with the file to:

Certificates of Correction Branch (C of C)
Randolph Square 9D40-D
Palm Location 7580
You can fax the Directors/SPE response to 571-270-9990

Lamonte Newsome
Certificates of Correction Branch
703-756-1574

Thank You For Your Assistance

The request for issuing the above-identified correction(s) is hereby:
Note your decision on the appropriate box.

- ☒ **Approved** — **All** changes apply.
- ☐ **Approved in Part** — Specify below which changes **do not** apply.
- ☐ **Denied** — State the reasons for denial below.

Comments: ML 11/3/09

RICHARD T. ELMS
SUPERVISORY PATENT EXAMINER
TECHNOLOGY CENTER 2800

AU 2824 11/3/09

UNITED STATES PATENT AND TRADEMARK OFFICE

Commissioner for Patents
United States Patent and Trademark Office
P.O. Box 1450
Alexandria, VA 22313-1450
www.uspto.gov

MAILED

JAN 04 2010

OFFICE OF PETITIONS

Winston & Strawn, LLP
Patent Department
1700 K Street, N.W.
Washington, DC 20006

In re Application of
Andrew Behar
Application No. 11/492,484
Filed: July 24, 2006
Attorney Docket No. 85167-4100

DECISION ON PETITION
TO WITHDRAW
FROM RECORD

This is a decision on the Request to Withdraw as attorney or agent of record under 37 C.F.R. § 1.36(b), filed November 11, 2009.

The request is **moot because a revocation of power of attorney has been filed**.

A review of the file record indicates that the power of attorney to Winston & Strawn has been revoked by the assignee of the patent application on November 9, 2009. Accordingly, the request to withdraw under 37 C.F.R. § 1.36(b) is moot.

All future communications from the Office will continue to be directed to the below listed until otherwise notified by applicant.

Telephone inquires concerning this decision should be directed to Kimberly Inabinet at 571-272-4618.

/Kimberly Inabinet/

Kimberly Inabinet
Petitions Examiner
Office of Petitions

cc: Francis Law Group
1942 Emabarcadero
Oakland, CA 94606

UNITED STATES PATENT AND TRADEMARK OFFICE

UNITED STATES DEPARTMENT OF COMMERCE
United States Patent and Trademark Office
Address: COMMISSIONER FOR PATENTS
P.O. Box 1450
Alexandria, Virginia 22313-1450
www.uspto.gov

HONEYWELL/S&S
Patent Services
101 Columbia Road
P.O.Box 2245
Morristown, NJ 07962-2245

Mail Date: 06/01/2010

Applicant	: Emray R. Goossen	: DECISION ON REQUEST FOR
Patent Number	: 7658347	: RECALCULATION of PATENT
Issue Date	: 02/09/2010	: TERM ADJUSTMENT IN VIEW
Application No	: 11/492,490	: OF WYETH AND NOTICE OF INTENT TO
Filed	: 07/25/2006	: ISSUE CERTIFICATE OF CORRECTION
		:

The Request for Recalculation is **GRANTED** to the extent indicated.

The patent term adjustment has been determined to be **285** days. The USPTO will *sua sponte* issue a certificate of correction reflecting the amount of PTA days determined by the recalculation.

Prior to the issuance of the certificate of correction, the USPTO will afford patentee an opportunity to be heard and request reconsideration. Accordingly, patentee has **one month or thirty (30) days**, whichever is longer, to file a request for reconsideration of this patent term adjustment calculation. See 35 U.S.C. 154(b)(3)(B)(ii) and 37 CFR 1.322(a)(4). No extensions of time will be granted under 37 CFR 1.136.

Patentee should use document code PET.OP if electronically filing a request for reconsideration of this patent term adjustment calculation. The patentee must also include the information required by 37 CFR 1.705(b)(2) and the fee required by 37 CFR 1.18(e). If patentee does not file a timely request for reconsideration of this patent term adjustment calculation including the information required by 37 CFR 1.705(b)(2) and the fee required by 37 CFR 1.18(e), the USPTO will issue a certificate of correction reflecting the PTA determination noted above.

Patentee should be aware that in order to preserve the right to review in the United States District Court for the District of Columbia of the USPTO patent term adjustment determination, patentee must ensure that he or she also take the steps required under 35 U.S.C. 154(b)(4)(A) in a timely manner. Nothing in the request for recalculation should be construed as providing an alternative time frame for commencing a civil action under 35 U.S.C. 154(b)(4)(A).

Any questions concerning this decision should be directed to the Office of Patent Legal Administration at 571-272-7702.

UNITED STATES PATENT AND TRADEMARK OFFICE

Commissioner for Patents
United States Patent and Trademark Office
P.O. Box 1450
Alexandria, VA 22313-1450
www.uspto.gov

JONES DAY
222 EAST 41ST ST
NEW YORK NY 10017

MAILED

MAY 13 2010

OFFICE OF PETITIONS

In re Application of	:	
Ish-Horowicz et al.	:	
Application No.: 11/492497	:	DECISION ON
Filing or 371(c) Date: 07/24/2006	:	PETITION
Attorney Docket Number: 7326-136-999	:	

This is a decision in response to the "Petition Under 37 C.F.R. § 1.181(a) to Withdraw Holding of Abandonment," filed February 22, 2010.

This Petition is hereby **granted**.

The above-identified application became abandoned for failure to timely and properly reply to the final Office action, mailed May 7, 2009. The Office action set a three (3) month period for reply. Extensions of time were available under 37 CFR 1.136(a). No reply having been received, the application became abandoned on August 8, 2009. A Notice of Abandonment was mailed December 23, 2009.

With the present petition, Applicant has demonstrated non-receipt of the Office action by a preponderance of the evidence.

In view of the foregoing, the petition is granted. The holding of abandonment is hereby withdrawn.

The application will be referred to Technology Center Art Unit 1647 for re-mailing of the Office action and re-setting the period for reply. A copy of the previously mailed Office is also enclosed.

Telephone inquiries concerning this matter should be directed to the undersigned at (571) 272-3232.

/Derek L. Woods/

Derek L. Woods
Attorney
Office of Petitions

UNITED STATES PATENT AND TRADEMARK OFFICE

Commissioner for Patents
United States Patent and Trademark Office
P.O. Box 1450
Alexandria, VA 22313-1450
www.uspto.gov

Risto A. Rinne, Jr.
Complete Patenting Services
Suite E
2173 East Francisco Boulevard
San Rafael CA 94901

COPY MAILED
OCT 13 2006
OFFICE OF PETITIONS

In re Application of	:	
ROSEN	:	
Application No. 11/492,507	:	DECISION ON PETITION
Filed: July 24, 2006	:	TO MAKE SPECIAL
Attorney Docket No. ROSEN	:	37 CFR 1.102(c)(2)
	:	

This is a decision on the petition under 37 CFR 1.102(c)(2)(ii), filed July 24, 2006, to make the above-identified application special based on the invention materially contributing to the development or conservation of energy resources as set forth in M.P.E.P. § 708.02, Section VI.

The petition is **GRANTED**.

A grantable petition to make an application special under 37 CFR 1.102(c)(2)(ii) and MPEP § 708.02, Section VI: Energy, must state how the invention materially contributes to (A) the discovery or development of energy resources, or (b) the more efficient utilization and conservation of energy resources. If the disclosure is not clear on its face that the claimed invention materially contributes category (A) or (B), the petition must be accompanied by a statement by the applicant, assignee, or an attorney/agent registered to practice before the Office explaining how the materiality standard is met. Examples of inventions in category (A) would be developments in fossil fuels (natural gas, coal, and petroleum), hydrogen fuel technologies, nuclear energy, solar energy, etc. Category (B) would include inventions relating to the reduction of energy consumption in combustion systems, industrial equipment, household appliances, etc. No fee is required.

The instant petition complies with the conditions required under category (A). The petition explains that the invention substantially increases the efficiency of generating electricity using solar power or is a material contribution to the development of energy resources. Accordingly, the above-identified application has been accorded "special" status.

Telephone inquires concerning this decision should be directed to the undersigned at 571-272-4787.

All other inquires concerning either the examination or status of the application should be directed to the Technology Center.

The application is being forwarded to the Technology Center Art Unit 2838 for action on the merits commensurate with this decision.

Denise Pothier
Petitions Examiner
Office of Petitions

UNITED STATES PATENT AND TRADEMARK OFFICE

UNITED STATES DEPARTMENT OF COMMERCE
United States Patent and Trademark Office
Address: COMMISSIONER FOR PATENTS
P.O. Box 1450
Alexandria, Virginia 22313-1450
www.uspto.gov

KNOBBE MARTENS OLSON & BEAR LLP
2040 MAIN STREET
FOURTEENTH FLOOR
IRVINE, CA 92614

Mail Date: 04/20/2010

Applicant	: Mirzafer K. Abatchev	: DECISION ON REQUEST FOR
Patent Number	: 7629693	: RECALCULATION of PATENT
Issue Date	: 12/08/2009	: TERM ADJUSTMENT IN VIEW
Appliction No	: 11/492,513	: OF WYETH AND NOTICE OF INTENT TO
Filed	: 07/24/2006	: ISSUE CERTIFICATE OF CORRECTION
		:

The Request for Recalculation is **GRANTED** to the extent indicated.

The patent term adjustment has been determined to be **161** days. The USPTO will *sua sponte* issue a certificate of correction reflecting the amount of PTA days determined by the recalculation.

Prior to the issuance of the certificate of correction, the USPTO will afford patentee an opportunity to be heard and request reconsideration. Accordingly, patentee has **one month or thirty (30) days**, whichever is longer, to file a request for reconsideration of this patent term adjustment calculation. See 35 U.S.C. 154(b)(3)(B)(ii) and 37 CFR 1.322(a)(4). No extensions of time will be granted under 37 CFR 1.136.

Patentee should use document code PET.OP if electronically filing a request for reconsideration of this patent term adjustment calculation. The patentee must also include the information required by 37 CFR 1.705(b)(2) and the fee required by 37 CFR 1.18(e). If patentee does not file a timely request for reconsideration of this patent term adjustment calculation including the information required by 37 CFR 1.705(b)(2) and the fee required by 37 CFR 1.18(e), the USPTO will issue a certificate of correction reflecting the PTA determination noted above.

Patentee should be aware that in order to preserve the right to review in the United States District Court for the District of Columbia of the USPTO patent term adjustment determination, patentee must ensure that he or she also take the steps required under 35 U.S.C. 154(b)(4)(A) in a timely manner. Nothing in the request for recalculation should be construed as providing an alternative time frame for commencing a civil action under 35 U.S.C. 154(b)(4)(A).

Any questions concerning this decision should be directed to the Office of Patent Legal Administration at 571-272-7702.

UNITED STATES PATENT AND TRADEMARK OFFICE

UNITED STATES DEPARTMENT OF COMMERCE
United States Patent and Trademark Office
Address: COMMISSIONER FOR PATENTS
P.O. Box 1450
Alexandria, Virginia 22313-1450
www.uspto.gov

FROMMER LAWRENCE & HAUG
745 FIFTH AVENUE- 10TH FL.
NEW YORK, NY 10151

Mail Date: 04/21/2010

Applicant	: John Ding	: DECISION ON REQUEST FOR
Patent Number	: 7617846	: RECALCULATION of PATENT
Issue Date	: 11/17/2009	: TERM ADJUSTMENT IN VIEW
Appliction No	: 11/492,529	: OF WYETH AND NOTICE OF INTENT TO
Filed	: 07/25/2006	: ISSUE CERTIFICATE OF CORRECTION
		:

The Request for Recalculation is **GRANTED** to the extent indicated.

The patent term adjustment has been determined to be **120** days. The USPTO will *sua sponte* issue a certificate of correction reflecting the amount of PTA days determined by the recalculation.

Prior to the issuance of the certificate of correction, the USPTO will afford patentee an opportunity to be heard and request reconsideration. Accordingly, patentee has **one month or thirty (30) days**, whichever is longer, to file a request for reconsideration of this patent term adjustment calculation. See 35 U.S.C. 154(b)(3)(B)(ii) and 37 CFR 1.322(a)(4). No extensions of time will be granted under 37 CFR 1.136.

Patentee should use document code PET.OP if electronically filing a request for reconsideration of this patent term adjustment calculation. The patentee must also include the information required by 37 CFR 1.705(b)(2) and the fee required by 37 CFR 1.18(e). If patentee does not file a timely request for reconsideration of this patent term adjustment calculation including the information required by 37 CFR 1.705(b)(2) and the fee required by 37 CFR 1.18(e), the USPTO will issue a certificate of correction reflecting the PTA determination noted above.

Patentee should be aware that in order to preserve the right to review in the United States District Court for the District of Columbia of the USPTO patent term adjustment determination, patentee must ensure that he or she also take the steps required under 35 U.S.C. 154(b)(4)(A) in a timely manner. Nothing in the request for recalculation should be construed as providing an alternative time frame for commencing a civil action under 35 U.S.C. 154(b)(4)(A).

Any questions concerning this decision should be directed to the Office of Patent Legal Administration at 571-272-7702.

UNITED STATES PATENT AND TRADEMARK OFFICE

UNITED STATES DEPARTMENT OF COMMERCE
United States Patent and Trademark Office
Address: COMMISSIONER FOR PATENTS
P.O. Box 1450
Alexandria, Virginia 22313-1450
www.uspto.gov

FROMMER LAWRENCE & HAUG
745 FIFTH AVENUE- 10TH FL.
NEW YORK, NY 10151

Mail Date: 05/18/2010

Applicant : John Ding
Patent Number : 7617846
Issue Date : 11/17/2009
Application No: 11/492,529
Filed : 07/25/2006

: NOTICE CONCERNING IMPROPER
: CALCULATION OF PATENT TERM
: ADJUSTMENT BASED UPON USPTO
: IMPROPERLY MEASURING REDUCTION
: PERIOD UNDER 37 CFR 1.704(c)(10).

The United States Patent and Trademark Office (USPTO) discovered that in processing the recent recalculation decisions mailed in response to patentee's filed Request for Recalculation of Patent Term Adjustment in view of Wyeth, the USPTO improperly measured the reduction period for reductions under 37 CFR 1.704(c)(10). Pursuant to 37 CFR 1.704(c)(10), patentee's reduction begins on the date of filing the amendment under 37 CFR 1.312 ("1.312 amendment") or other related paper and ends on the date that the Office mails a response to the filing of the 1.312 amendment or other paper. It has been discovered that during the recalculation, the calculation failed to the limit the reduction to the mail date of the response to the 1.312 amendment or other paper. Accordingly, patentee's reductions were greater than warranted.

This notice **VACATES** the previous GRANTED request for recalculation and provides patentee with a revised GRANTED recalculation.

The patent term adjustment has been determined to be **152** days. The USPTO will *sua sponte* issue a certificate of correction reflecting the amount of patent term adjustment (PTA) days determined by the recalculation.

Prior to the issuance of the certificate of correction, the USPTO will afford patentee an opportunity to be heard and request reconsideration. Accordingly, patentee has **one month or thirty (30) days** from the mail date of this notice, whichever is longer, to file a request for reconsideration of this PTA calculation. See 35 U.S.C. § 154(b)(3)(B)(ii) and 37 CFR 1.322(a)(4).

Patentee should use document code PET.OP if electronically filing a request for reconsideration of this PTA calculation. The patentee must also include the information required by 37 CFR 1.705(b)(2), and the fee required by 37 CFR 1.18(e). If patentee does not file a timely request for reconsideration of this PTA calculation, including the information required by 37 CFR 1.705(b)(2) and the fee required by 37 CFR 1.18(e), the USPTO will issue a certificate of correction reflecting the PTA determination noted above.

Patentee should be aware that in order to preserve the right of review of the USPTO's PTA determination in the United States District Court for the District of Columbia, patentee must ensure that the steps required under 35 U.S.C. § 154 (b)(4) are taken in a timely manner. Nothing in the request for recalculation should be construed as providing an alternative time frame for commencing a civil action under 35 U.S.C. § 154(b)(4).

UNITED STATES PATENT AND TRADEMARK OFFICE

UNITED STATES DEPARTMENT OF COMMERCE
United States Patent and Trademark Office
Address: COMMISSIONER FOR PATENTS
P.O. Box 1450
Alexandria, Virginia 22313-1450
www.uspto.gov

MCDONNELL BOEHNEN HULBERT & BERGHOFF LLP
300 S. WACKER DRIVE
32ND FLOOR
CHICAGO, IL 60606

Mail Date: 04/21/2010

Applicant	: Per-Olof Berggren	: DECISION ON REQUEST FOR
Patent Number	: 7601687	: RECALCULATION of PATENT
Issue Date	: 10/13/2009	: TERM ADJUSTMENT IN VIEW
Appliction No	: 11/492,530	: OF WYETH AND NOTICE OF INTENT TO
Filed	: 07/25/2006	: ISSUE CERTIFICATE OF CORRECTION
		:

The Request for Recalculation is **GRANTED** to the extent indicated.

The patent term adjustment has been determined to be **15** days. The USPTO will *sua sponte* issue a certificate of correction reflecting the amount of PTA days determined by the recalculation.

Prior to the issuance of the certificate of correction, the USPTO will afford patentee an opportunity to be heard and request reconsideration. Accordingly, patentee has **one month or thirty (30) days**, whichever is longer, to file a request for reconsideration of this patent term adjustment calculation. See 35 U.S.C. 154(b)(3)(B)(ii) and 37 CFR 1.322(a)(4). No extensions of time will be granted under 37 CFR 1.136.

Patentee should use document code PET.OP if electronically filing a request for reconsideration of this patent term adjustment calculation. The patentee must also include the information required by 37 CFR 1.705(b)(2) and the fee required by 37 CFR 1.18(e). If patentee does not file a timely request for reconsideration of this patent term adjustment calculation including the information required by 37 CFR 1.705(b)(2) and the fee required by 37 CFR 1.18(e), the USPTO will issue a certificate of correction reflecting the PTA determination noted above.

Patentee should be aware that in order to preserve the right to review in the United States District Court for the District of Columbia of the USPTO patent term adjustment determination, patentee must ensure that he or she also take the steps required under 35 U.S.C. 154(b)(4)(A) in a timely manner. Nothing in the request for recalculation should be construed as providing an alternative time frame for commencing a civil action under 35 U.S.C. 154(b)(4)(A).

Any questions concerning this decision should be directed to the Office of Patent Legal Administration at 571-272-7702.

IN THE UNITED STATES PATENT AND TRADEMARK OFFICE

In Re Application of : Sreenath Mambakkam, et al. Patent No. 7,295,443 Application No. 11/492,556 Issue Date: November 13, 2007 For: SMARTCONNECT UNIVERSAL FLASH MEDIA CARD ADAPTERS	Examiner: Dameon, E. Levi Art Unit: 2841 Confirmation: 7107

Commissioner for Patents
Office of Patent Publication
ATTN: Certificate of Corrections Branch
P.O. Box 1450
Alexandria, VA 22313-1450

REQUEST FOR CERTIFICATE OF CORRECTION OF PATENT FOR APPLICANT'S MISTAKES (37 C.F.R. §1.323)

Applicant hereby requests the issuance of a Certificate of Correction for the above identified patent. Submitted herewith are two pages of Form PTO/SB/44 and one replacement drawing page.

REMARKS

The proposed corrections do not constitute new matter, require reexamination or materially affect the scope or meaning of the patent.

1. The undersigned attorney, David Tichane, is the attorney for the assignee.

2. The Certificate of Correction corrects a typographical error made by the applicant when the application was initially filed; namely, in FIG. 1, on the first sheet of drawings, reference designation number **149** is labeled "Compact Clash" instead of "Compact-Flash". In the specification, column 1, line 66, the number **149** correctly calls out "CompactFlash". A replacement sheet (sheet 1 of 5) is submitted herewith.

3. The Certificate of Correction corrects a typographical error made by the applicant when the application was initially filed; namely, in FIG. 1, on the first sheet of drawings, the three right arrows should touch each of the indicated boxes. This error is corrected in the same replacement sheet indicated above.

4. The Certificate of Correction corrects a typographical error made by the applicant when the application was initially filed; namely, in column 1, line 67, the sentence reads "151_", instead of "151."

5. The Certificate of Correction corrects a typographical error made by the applicant when the application was initially filed; namely, in column 2, line 52, the sentence reads "straddle_mount", instead of "straddle-mount".

6. The Certificate of Correction corrects a typographical error made by the applicant when the application was initially filed; namely, in column 2, line 62, the sentence reads "211_", instead of "211."

7. The Certificate of Correction corrects a typographical error made by the applicant when the application was initially filed; namely, in column 5, line 41, the sentence reads "compact flash", instead of "CompactFlash".

8. The Certificate of Correction corrects a typographical error made by the applicant when the application was initially filed; namely, in column 5, line 42, the sentence reads "surface-mounted", instead of "surface_mounted".

9. The Certificate of Correction corrects a typographical error made by the applicant when the application was initially filed; namely, in column 5, line 66, the sentence reads "flashtmemory", instead of "flash-memory".

10. The Certificate of Correction corrects a typographical error made by the applicant when the application was initially filed; namely, in column 6, line 2, the sentence denotes "DIO" instead of "SDIO". "SDIO": is correctly called out in FIG. 4.

11. The Certificate of Correction corrects a typographical error made by the applicant when the application was initially filed; namely, in column 6, line 3, the sentence reads "10 (DO)", instead of "10 (D0)".

12. The Certificate of Correction corrects a typographical error made by the applicant when the application was initially filed; namely, in column 6, line 6, the sentence reads "2L A BS", instead of "21. A BS".

13. The Certificate of Correction corrects a typographical error made by the applicant when the application was initially filed; namely, in column 6, line 7, the sentence reads "CMD" instead of "MCMD". "MCMD" is correctly called out in FIG. 4.

14. The Certificate of Correction corrects a typographical error made by the applicant when the application was initially filed; namely, in column 6, line 54, the sentence reads "a tap-front" instead of "a top-front".

15. The Certificate of Correction corrects a typographical error made by the applicant when the application was initially filed; namely, in column 6, line 56, the sentence reads "Smartmedia", instead of "SmartMedia".

16. The Certificate of Correction corrects a typographical error made by the applicant when the application was initially filed; namely, in column 8, line 61, the sentence reads "surface-mounted", instead of "surface_mounted".

17. The Certificate of Correction corrects a typographical error made by the applicant when the application was initially filed; namely, in column 10, line 5, the sentence reads "an identified" instead of "on identified".

Respectfully submitted,

Date: June 22, 2009

David Tichane
Reg. No. 37,741

The TPL Group
20400 Stevens Creek Blvd., Fifth Floor
Cupertino, CA 95014
(408) 850-3270 Main Telephone
(408) 512-3015 Direct Telephone
(408) 446-0905 Facsimile
david.tichane @tplgroup.net

PTO/SB/44 (09-07)
Approved for use through 08/31/2010. OMB 0651-0033
U.S. Patent and Trademark Office; U.S. DEPARTMENT OF COMMERCE
Under the Paperwork Reduction Act of 1995, no persons are required to respond to a collection of information unless it displays a valid OMB control number.
(Also Form PTO-1050)

UNITED STATES PATENT AND TRADEMARK OFFICE
CERTIFICATE OF CORRECTION

PATENT NO. : 7,295,443

APPLICATION NO.: 11/492,556

ISSUE DATE : 11/13/2007

INVENTOR(S) : Sreenath Mambakkam, Arockiyaswamy Venkidu, Larry Lawson Jones

It is certified that an error appears or errors appear in the above-identified patent and that said Letters Patent is hereby corrected as shown below:

In FIG. 1, reference 149, replace "Compact Clash" with --Compact-Flash--

In FIG. 1, the three right arrows should touch each of the indicated boxes.

In column 1, line 67, replace “151 ” with --151.--

in column 2, line 52, replace “straddle mount” with --straddle-mount--

In column 2, line 62, replace “211 ” with --211.--

In column 5, line 41, replace “compact flash” with --CompactFlash--

In column 5, line 42, replace “surface-mounted” with --surface mounted--

In column 5, line 66, replace “flashtmemory” with --flash-memory--

In column 5, line 62, replace "DIO" with --SDIO--

In column 6, line 3, replace “10 (DO)” with --10 (D0)--

In column 6, line 6, replace “2L A BS” with --21. A BS--

In column 6, line 7, replace “CMD” with --MCMD--

In column 6, line 54, replace "tap-front” with --top-front--

In column 6, line 56, replace “Smartmedia” with --SmartMedia--

MAILING ADDRESS OF SENDER (Please do not use customer number below):

The TPL Group
20400 Stevens Creek Blvd., Fifth Floor
Cupertino, CA 95014

This collection of information is required by 37 CFR 1.322, 1.323, and 1.324. The information is required to obtain or retain a benefit by the public which is to file (and by the USPTO to process) an application. Confidentiality is governed by 35 U.S.C. 122 and 37 CFR 1.14. This collection is estimated to take 1.0 hour to complete, including gathering, preparing, and submitting the completed application form to the USPTO. Time will vary depending upon the individual case. Any comments on the amount of time you require to complete this form and/or suggestions for reducing this burden, should be sent to the Chief Information Officer, U.S. Patent and Trademark Office, U.S. Department of Commerce, P.O. Box 1450, Alexandria, VA 22313-1450. DO NOT SEND FEES OR COMPLETED FORMS TO THIS ADDRESS. **SEND TO: Attention Certificate of Corrections Branch, Commissioner for Patents, P.O. Box 1450, Alexandria, VA 22313-1450.**

If you need assistance in completing the form, call 1-800-PTO-9199 and select option 2.

PTO/SB/44 (09-07)
Approved for use through 08/31/2010. OMB 0651-0033
U.S. Patent and Trademark Office; U.S. DEPARTMENT OF COMMERCE
Under the Paperwork Reduction Act of 1995, no persons are required to respond to a collection of information unless it displays a valid OMB control number.
(Also Form PTO-1050)

UNITED STATES PATENT AND TRADEMARK OFFICE
CERTIFICATE OF CORRECTION

PATENT NO. : 7,295,443

APPLICATION NO.: 11/492,556

ISSUE DATE : 11/13/2007

INVENTOR(S) : Sreenath Mambakkam, Arockiyaswamy Venkidu, Larry Lawson Jones

It is certified that an error appears or errors appear in the above-identified patent and that said Letters Patent is hereby corrected as shown below:

In column 8, line 61, replace “surface-mounted” with --surface mounted--

In column 10, line 5, replace “an identified” with --on identified--

MAILING ADDRESS OF SENDER (Please do not use customer number below):

The TPL Group
20400 Stevens Creek Blvd., Fifth Floor
Cupertino, CA 95014

This collection of information is required by 37 CFR 1.322, 1.323, and 1.324. The information is required to obtain or retain a benefit by the public which is to file (and by the USPTO to process) an application. Confidentiality is governed by 35 U.S.C. 122 and 37 CFR 1.14. This collection is estimated to take 1.0 hour to complete, including gathering, preparing, and submitting the completed application form to the USPTO. Time will vary depending upon the individual case. Any comments on the amount of time you require to complete this form and/or suggestions for reducing this burden, should be sent to the Chief Information Officer, U.S. Patent and Trademark Office, U.S. Department of Commerce, P.O. Box 1450, Alexandria, VA 22313-1450. DO NOT SEND FEES OR COMPLETED FORMS TO THIS ADDRESS. **SEND TO: Attention Certificate of Corrections Branch, Commissioner for Patents, P.O. Box 1450, Alexandria, VA 22313-1450.**

If you need assistance in completing the form, call 1-800-PTO-9199 and select option 2.

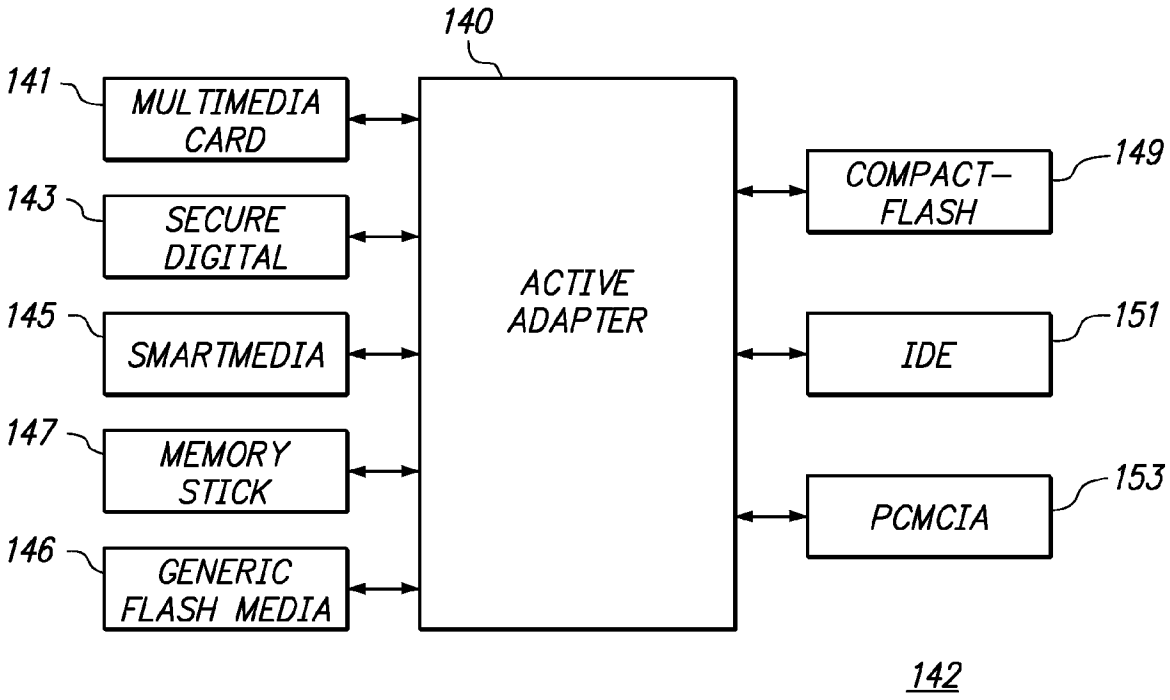

(PRIOR ART)

FIG. 1

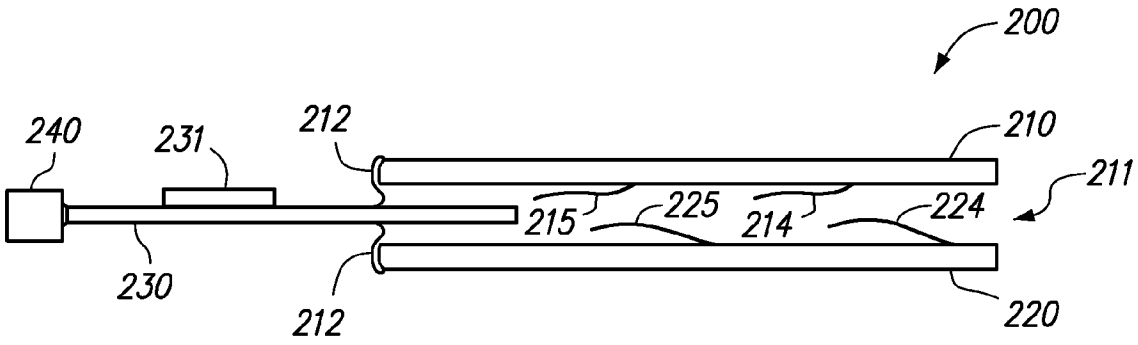

(PRIOR ART)

FIG. 2

UNITED STATES PATENT AND TRADEMARK OFFICE

UNITED STATES DEPARTMENT OF COMMERCE
United States Patent and Trademark Office
Address: COMMISSIONER FOR PATENTS
P.O. Box 1450
Alexandria, Virginia 22313-1450
www.uspto.gov

HARNESS, DICKEY & PIERCE, P.L.C.
P.O. BOX 828
BLOOMFIELD HILLS, MI 48303

Mail Date: 04/21/2010

Applicant	: Shin Honda	: DECISION ON REQUEST FOR
Patent Number	: 7624930	: RECALCULATION of PATENT
Issue Date	: 12/01/2009	: TERM ADJUSTMENT IN VIEW
Appliction No	: 11/492,560	: OF WYETH AND NOTICE OF INTENT TO
Filed	: 07/25/2006	: ISSUE CERTIFICATE OF CORRECTION
		:

The Request for Recalculation is **GRANTED** to the extent indicated.

The patent term adjustment has been determined to be **454** days. The USPTO will *sua sponte* issue a certificate of correction reflecting the amount of PTA days determined by the recalculation.

Prior to the issuance of the certificate of correction, the USPTO will afford patentee an opportunity to be heard and request reconsideration. Accordingly, patentee has **one month or thirty (30) days**, whichever is longer, to file a request for reconsideration of this patent term adjustment calculation. See 35 U.S.C. 154(b)(3)(B)(ii) and 37 CFR 1.322(a)(4). No extensions of time will be granted under 37 CFR 1.136.

Patentee should use document code PET.OP if electronically filing a request for reconsideration of this patent term adjustment calculation. The patentee must also include the information required by 37 CFR 1.705(b)(2) and the fee required by 37 CFR 1.18(e). If patentee does not file a timely request for reconsideration of this patent term adjustment calculation including the information required by 37 CFR 1.705(b)(2) and the fee required by 37 CFR 1.18(e), the USPTO will issue a certificate of correction reflecting the PTA determination noted above.

Patentee should be aware that in order to preserve the right to review in the United States District Court for the District of Columbia of the USPTO patent term adjustment determination, patentee must ensure that he or she also take the steps required under 35 U.S.C. 154(b)(4)(A) in a timely manner. Nothing in the request for recalculation should be construed as providing an alternative time frame for commencing a civil action under 35 U.S.C. 154(b)(4)(A).

Any questions concerning this decision should be directed to the Office of Patent Legal Administration at 571-272-7702.

UNITED STATES PATENT AND TRADEMARK OFFICE

UNITED STATES DEPARTMENT OF COMMERCE
United States Patent and Trademark Office
Address: COMMISSIONER FOR PATENTS
P.O. Box 1450
Alexandria, Virginia 22313-1450
www.uspto.gov

BUCKNAM AND ARCHER
1077 NORTHERN BOULEVARD
ROSLYN, NY 11576

Mail Date: 04/21/2010

Applicant	: Yen-Chin Liao	: DECISION ON REQUEST FOR
Patent Number	: 7631250	: RECALCULATION of PATENT
Issue Date	: 12/08/2009	: TERM ADJUSTMENT IN VIEW
Appliction No	: 11/492,579	: OF WYETH AND NOTICE OF INTENT TO
Filed	: 07/25/2006	: ISSUE CERTIFICATE OF CORRECTION
		:

The Request for Recalculation is **GRANTED** to the extent indicated.

The patent term adjustment has been determined to be **722** days. The USPTO will *sua sponte* issue a certificate of correction reflecting the amount of PTA days determined by the recalculation.

Prior to the issuance of the certificate of correction, the USPTO will afford patentee an opportunity to be heard and request reconsideration. Accordingly, patentee has **one month or thirty (30) days**, whichever is longer, to file a request for reconsideration of this patent term adjustment calculation. See 35 U.S.C. 154(b)(3)(B)(ii) and 37 CFR 1.322(a)(4). No extensions of time will be granted under 37 CFR 1.136.

Patentee should use document code PET.OP if electronically filing a request for reconsideration of this patent term adjustment calculation. The patentee must also include the information required by 37 CFR 1.705(b)(2) and the fee required by 37 CFR 1.18(e). If patentee does not file a timely request for reconsideration of this patent term adjustment calculation including the information required by 37 CFR 1.705(b)(2) and the fee required by 37 CFR 1.18(e), the USPTO will issue a certificate of correction reflecting the PTA determination noted above.

Patentee should be aware that in order to preserve the right to review in the United States District Court for the District of Columbia of the USPTO patent term adjustment determination, patentee must ensure that he or she also take the steps required under 35 U.S.C. 154(b)(4)(A) in a timely manner. Nothing in the request for recalculation should be construed as providing an alternative time frame for commencing a civil action under 35 U.S.C. 154(b)(4)(A).

Any questions concerning this decision should be directed to the Office of Patent Legal Administration at 571-272-7702.

UNITED STATES PATENT AND TRADEMARK OFFICE

Commissioner for Patents
United States Patent and Trademark Office
P.O. Box 1450
Alexandria, VA 22313-1450
www.uspto.gov

MYERS & KAPLAN
INTELLECTUAL PROPERTY LAW, L.L.C.
CUMBERLAND CENTER II
3100 CUMBERLAND BLVD , SUITE 1400
ATLANTA GA 30339

COPY MAILED

APR 16 2008

OFFICE OF PETITIONS

In re Application of :

SCHOOLCRAFT, Michael Sr. :
Application No. 11/492,588 : DECISION ON PETITION
Filed: July 25, 2006 : TO WITHDRAW
Attorney Docket No. **23580-RA-CON** : FROM RECORD

This is a decision on the Request to Withdraw as attorney or agent of record under 37 C.F.R. § 1.36(b), filed March 18, 2008.

The request is **APPROVED**.

A grantable request to withdraw as attorney/agent of record must be signed by every attorney/agent seeking to withdraw or contain a clear indication that one attorney is signing on behalf of another/others. A request to withdraw will not be approved unless at least 30 (thirty) days would remain between the date of approval and the later of the expiration date of a time to file a response or the expiration date of the maximum time period which can be extended under 37 C.F.R. § 1.136(a).

The request was signed by Joel Myers on behalf of all attorneys of record who are associated with customer No. 30184. All attorneys/agents associated with the Customer Number 30184 have been withdrawn. Applicant is reminded that there is no attorney of record at this time.

All future correspondence will be directed to the inventor Michael Schoolcraft, Sr. at the address indicated below.

There is an outstanding Office action mailed March 07, 2008 that requires a reply from the applicant.

Telephone inquiries concerning this decision should be directed to Tredelle Jackson at 571-272-2783.

Tredelle D. Jackson
Petitions Examiner
Office of Petitions

cc: **MICHAEL SCHOOLCRAFT, SR.**
SCHOOLCRAFT, INC.
109 SWEETGUM ROAD
PEACHTREE CITY, GA 30269

UNITED STATES PATENT AND TRADEMARK OFFICE

Commissioner for Patents
United States Patent and Trademark Office
P.O. Box 1450
Alexandria, VA 22313-1450
www.uspto.gov

QUALCOMM INCORPORATED
5775 MOREHOUSE DR.
SAN DIEGO, CA 92121

COPY MAILED

JAN 17 2007

OFFICE OF PETITIONS

In re Application of :
Smith, Parekh, and Staddon :
Application No. 11/492,610 :
Filed: July 24, 2006 :
Attorney Docket No. 020657 :
For: Subscriber Unit For A Cellular Communication System :

Decision Refusing to Accord Status Under 37 CFR 1.47(a)

This is a decision on the petition under 37 CFR 1.47(a), filed October 19, 2006.

The petition is **DISMISSED**.

Any request for reconsideration of this decision must be submitted within TWO (2) MONTHS from the mail date of this decision. Extensions of time under 37 CFR 1.136(a) are permitted. No further petition fee is required for the request. Any response should be entitled "Request for Reconsideration of Petition Under 37 CFR 1.47(a)" and may include an oath or declaration executed by the current non-signing inventor(s). **Failure to respond will result in abandonment of the application.**

A grantable petition under 37 CFR 1.47(a) requires

(1) proof that the non-signing inventor cannot be found or reached after diligent effort or that the inventor refused to sign the declaration after having been presented with the application papers (specification, claims, and drawings),
(2) a proper oath or Declaration executed by the available joint inventor(s),
(3) the fee of $200 as specified in 37 CFR 1.17(g), and
(4) the last known address of the non-signing inventor(s).

The instant petition fails to satisfy item (2) above.

The first inventor, Alan Smith, is deceased. As part of the declaration, petitioner submitted a supplemental sheet properly signed by the legal representative, Julie Stuart. A review of the declaration indicates Ms. Stuart's signature also appears above, and partially in the same box, as Devan Parekh's signature.

A supplemental declaration with *only* Parekh's signature in Parekh's signature block should be filed.

The fee for a petition under 37 CFR 1.47 is $200. Therefore, the Office has charged $200, rather than $130, to petitioner's deposit account for the petition fee.

Further correspondence with respect to this matter should be addressed as follows:

By mail: Mail Stop Petition
Commissioner for Patents
P.O. Box 1450
Alexandria, VA 22313-1450

By facsimile: (571) 273-8300
Attn: Office of Petitions

By hand: U.S. Patent and Trademark Office
Customer Service Window
Randolph Building
401 Dulany Street
Alexandria, VA 22314

Telephone inquiries regarding this communication should be directed to Petitions Attorney Steven Brantley at (571) 272-3203.

Charles Steven Brantley
Senior Petitions Attorney
Office of Petitions

UNITED STATES PATENT AND TRADEMARK OFFICE

Commissioner for Patents
United States Patent and Trademark Office
P.O. Box 1450
Alexandria, VA 22313-1450
www.uspto.gov

QUALCOMM INCORPORATED
5775 MOREHOUSE DR.
SAN DIEGO, CA 92121

COPY MAILED

AUG 09 2007

OFFICE OF PETITIONS

In re Application of	:	
Smith, Parekh, and Staddon	:	Decision Noting Joinder of Inventor and
Application No. 11/492,610	:	Decision Dismissing Any Request for
Filed: July 24, 2006	:	Status Under 37 CFR 1.47 as Moot
Attorney Docket No. 020657	:	

This is a decision on the renewed petition under 37 CFR 1.47(a), filed March 7, 2007, and supplemented April 19, 2007.

The papers filed April 19, 2007, include a Declaration signed by the previously non-signing inventor in compliance with 37 CFR 1.63.

In view of the joinder of the inventor, further consideration under Rule 1.47(a) is unnecessary.

Therefore, the petition is **dismissed as moot**.

Technology Center Art Unit 2617 will be informed of the instant decision and the application will be examined in due course.

Telephone inquiries regarding this communication should be directed to Petitions Attorney Steven Brantley at (571) 272-3203.

Charles Steven Brantley
Senior Petitions Attorney
Office of Petitions

UNITED STATES PATENT AND TRADEMARK OFFICE

Commissioner for Patents
United States Patent and Trademark Office
P.O. Box 1450
Alexandria, VA 22313-1450
www.uspto.gov

BRINKS HOFER GILSON &
LIONE/MARVELL
P.O. BOX 10395
CHICAGO IL 60610

MAILED

APR 07 2010

OFFICE OF PETITIONS

In re Application of	:	
Qiang Luo et al	:	
Application No. 11/492,612	:	DECISION ON PETITION
Filed: July 24, 2006	:	UNDER 37 CFR 1.78(a)(6)
Attorney Docket No. MP0840	:	

This is a decision on the communication filed October 26, 2009 which is being treated as a petition under 37 CFR 1.78(a)(6), to accept an unintentionally delayed claim under 35 U.S.C. §119(e) for the benefit of the prior-filed provisional application set forth in the concurrently filed amendment.

The petition is **GRANTED.**

A petition under 37 CFR 1.78(a)(6) is only applicable to those applications filed on or after November 29, 2000. Further, the petition is appropriate only after expiration of the period specified in 37 CFR 1.78(a)(5)(ii) and must be filed during the pendency of the nonprovisional application. In addition, the petition must be accompanied by:

(1) the reference required by 35 U.S.C. § 119(e) and 37 CFR 1.78(a)(5)(i) to the prior-filed application, unless previously submitted;
(2) the surcharge set forth in § 1.17(t); and
(3) a statement that the entire delay between the date the claim was due under 37 CFR 1.78(a)(5)(ii) and the date the claim was filed was unintentional. The Director may require additional information where there is a question whether the delay was unintentional.

Additionally, the instant nonprovisional application must be pending at the time of filing of the reference to the prior-filed provisional application as required by 37 CFR 1.78(a)(5)(ii). Further, the nonprovisional application claiming the benefit of the prior-filed provisional application must have been filed within twelve months of the filing date of the prior-filed provisional application.

All of the above requirements having been satisfied, the late claim for priority under 35 U.S.C. § 119(e) is accepted as being unintentionally delayed.

The granting of the petition to accept the delayed benefit claim to the prior-filed application under 37 CFR 1.78(a)(6) should not be construed as meaning that this application is entitled to the benefit of the filing date of the prior-filed application. In order for this application to be entitled to the benefit of the prior-filed application, all other requirements under 35 U.S.C. §119(e) and 37 CFR 1.78(a)(4) and (a)(5) must be met. Similarly, the fact that the corrected Filing Receipt accompanying this decision on petition includes the prior-filed application should not be construed as meaning that applicant is entitled to the claim for benefit of priority to the prior-filed application noted thereon. Accordingly, the examiner will, in due course, consider this benefit claim and determine whether the application is entitled to the benefit of the earlier filing date.

A corrected Filing Receipt, which includes the priority claim to the prior-filed provisional application, accompanies this decision on petition.

Any inquiries concerning this decision may be directed to the undersigned at (571) 272-3208. All other inquiries concerning either the examination procedures or status of the application should be directed to the Technology Center.

The application is being forwarded to Technology Center AU 2816 for consideration by the examiner of the claim under 35 U.S.C. §119(e) for the benefit of priority to the prior-filed provisional application.

/KOC/
Karen Creasy
Petition Examiner
Office of Petitions

ATTACHMENT: Corrected Filing Receipt

UNITED STATES PATENT AND TRADEMARK OFFICE

UNITED STATES DEPARTMENT OF COMMERCE
United States Patent and Trademark Office
Address: COMMISSIONER FOR PATENTS
P.O. Box 1450
Alexandria, Virginia 22313-1450
www.uspto.gov

APPLICATION NUMBER	FILING or 371(c) DATE	GRP ART UNIT	FIL FEE REC'D	ATTY.DOCKET.NO	TOT CLAIMS	IND CLAIMS
11/492,612	07/24/2006	2816	1850	MP0840	37	3

CONFIRMATION NO. 6992

CORRECTED FILING RECEIPT

60537
BRINKS HOFER GILSON & LIONE/MARVELL
P.O. BOX 10395
CHICAGO, IL 60610

Date Mailed: 04/07/2010

Receipt is acknowledged of this non-provisional patent application. The application will be taken up for examination in due course. Applicant will be notified as to the results of the examination. Any correspondence concerning the application must include the following identification information: the U.S. APPLICATION NUMBER, FILING DATE, NAME OF APPLICANT, and TITLE OF INVENTION. Fees transmitted by check or draft are subject to collection. Please verify the accuracy of the data presented on this receipt. **If an error is noted on this Filing Receipt, please submit a written request for a Filing Receipt Correction. Please provide a copy of this Filing Receipt with the changes noted thereon. If you received a "Notice to File Missing Parts" for this application, please submit any corrections to this Filing Receipt with your reply to the Notice. When the USPTO processes the reply to the Notice, the USPTO will generate another Filing Receipt incorporating the requested corrections**

Applicant(s)

Qiang Luo, Milpitas, CA;
Yingxuan Li, Cupertino, CA;
Sriharsha Annadore, Sunnyvale, CA;
Pantas Sutardja, Los Gatos, CA;

Assignment For Published Patent Application

Marvell International Ltd., Hamilton, BELGIUM
Marvell Semiconductor, Inc.

Power of Attorney: The patent practitioners associated with Customer Number 60537

Domestic Priority data as claimed by applicant

This appln claims benefit of 60/728,634 10/20/2005
and claims benefit of 60/816,307 06/22/2006

Foreign Applications

If Required, Foreign Filing License Granted: 08/14/2006

The country code and number of your priority application, to be used for filing abroad under the Paris Convention, is **US 11/492,612**

Projected Publication Date: Request for Non-Publication Acknowledged

Non-Publication Request: Yes

Early Publication Request: No

Title

HIGH DATA RATE ENVELOPE DETECTOR FOR HIGH SPEED OPTICAL STORAGE APPLICATION

Preliminary Class

327

PROTECTING YOUR INVENTION OUTSIDE THE UNITED STATES

Since the rights granted by a U.S. patent extend only throughout the territory of the United States and have no effect in a foreign country, an inventor who wishes patent protection in another country must apply for a patent in a specific country or in regional patent offices. Applicants may wish to consider the filing of an international application under the Patent Cooperation Treaty (PCT). An international (PCT) application generally has the same effect as a regular national patent application in each PCT-member country. The PCT process **simplifies** the filing of patent applications on the same invention in member countries, but **does not result** in a grant of "an international patent" and does not eliminate the need of applicants to file additional documents and fees in countries where patent protection is desired.

Almost every country has its own patent law, and a person desiring a patent in a particular country must make an application for patent in that country in accordance with its particular laws. Since the laws of many countries differ in various respects from the patent law of the United States, applicants are advised to seek guidance from specific foreign countries to ensure that patent rights are not lost prematurely.

Applicants also are advised that in the case of inventions made in the United States, the Director of the USPTO must issue a license before applicants can apply for a patent in a foreign country. The filing of a U.S. patent application serves as a request for a foreign filing license. The application's filing receipt contains further information and guidance as to the status of applicant's license for foreign filing.

Applicants may wish to consult the USPTO booklet, "General Information Concerning Patents" (specifically, the section entitled "Treaties and Foreign Patents") for more information on timeframes and deadlines for filing foreign patent applications. The guide is available either by contacting the USPTO Contact Center at 800-786-9199, or it can be viewed on the USPTO website at http://www.uspto.gov/web/offices/pac/doc/general/index.html.

For information on preventing theft of your intellectual property (patents, trademarks and copyrights), you may wish to consult the U.S. Government website, http://www.stopfakes.gov. Part of a Department of Commerce initiative, this website includes self-help "toolkits" giving innovators guidance on how to protect intellectual property in specific countries such as China, Korea and Mexico. For questions regarding patent enforcement issues, applicants may call the U.S. Government hotline at 1-866-999-HALT (1-866-999-4158).

LICENSE FOR FOREIGN FILING UNDER

Title 35, United States Code, Section 184

Title 37, Code of Federal Regulations, 5.11 & 5.15

GRANTED

The applicant has been granted a license under 35 U.S.C. 184, if the phrase "IF REQUIRED, FOREIGN FILING LICENSE GRANTED" followed by a date appears on this form. Such licenses are issued in all applications where

the conditions for issuance of a license have been met, regardless of whether or not a license may be required as set forth in 37 CFR 5.15. The scope and limitations of this license are set forth in 37 CFR 5.15(a) unless an earlier license has been issued under 37 CFR 5.15(b). The license is subject to revocation upon written notification. The date indicated is the effective date of the license, unless an earlier license of similar scope has been granted under 37 CFR 5.13 or 5.14.

This license is to be retained by the licensee and may be used at any time on or after the effective date thereof unless it is revoked. This license is automatically transferred to any related applications(s) filed under 37 CFR 1.53(d). This license is not retroactive.

The grant of a license does not in any way lessen the responsibility of a licensee for the security of the subject matter as imposed by any Government contract or the provisions of existing laws relating to espionage and the national security or the export of technical data. Licensees should apprise themselves of current regulations especially with respect to certain countries, of other agencies, particularly the Office of Defense Trade Controls, Department of State (with respect to Arms, Munitions and Implements of War (22 CFR 121-128)); the Bureau of Industry and Security, Department of Commerce (15 CFR parts 730-774); the Office of Foreign AssetsControl, Department of Treasury (31 CFR Parts 500+) and the Department of Energy.

NOT GRANTED

No license under 35 U.S.C. 184 has been granted at this time, if the phrase "IF REQUIRED, FOREIGN FILING LICENSE GRANTED" DOES NOT appear on this form. Applicant may still petition for a license under 37 CFR 5.12, if a license is desired before the expiration of 6 months from the filing date of the application. If 6 months has lapsed from the filing date of this application and the licensee has not received any indication of a secrecy order under 35 U.S.C. 181, the licensee may foreign file the application pursuant to 37 CFR 5.15(b).

UNITED STATES PATENT AND TRADEMARK OFFICE

Commissioner for Patents
United States Patent and Trademark Office
P.O. Box 1450
Alexandria, VA 22313-1450
www.uspto.gov

APPLICATION NUMBER	FILING/RECEIPT DATE	FIRST NAMED APPLICANT	ATTORNEY DOCKET NUMBER
11/492,637	07/25/2006	Forbes	1303.019US5

SCHWEGMAN, LUNDBERG & WOESSNER, P.A.
P.O. BOX 2938
MINNEAPOLIS MN 55402

Date Mailed: 10/17/2007

DECISION GRANTING PETITION UNDER 37 CFR 1.138(d)
The declaration of express abandonment is recognized

This is in response to the petition under 37 CFR 1.138(d) filed on August 30, 2007, requesting a refund of any previously paid search fee and excess claims fee in the above-identified application.

The petition is granted.

The express abandonment is recognized. Any previously paid search fee and excess claims fee are hereby refunded.

Any inquiries concerning this decision should be directed to the Office of Data Management at (571) 272-4200.

Patent Publication Branch
Office of Data Management

UNITED STATES PATENT AND TRADEMARK OFFICE

Commissioner for Patents
United States Patent and Trademark Office
P.O. Box 1450
Alexandria, VA 22313-1450
www.uspto.gov

ARRIS INTERNATIONAL, INC
3871 LAKEFIELD DRIVE
SUWANEE GA 30024

MAILED

JUN 07 2010

OFFICE OF PETITIONS

In re Application of

Oleksandr Volkov.

Application No. 11/492,640

Filed: July 25, 2006

Attorney Docket No. 10181

DECISION ON PETITION

This is a decision on the petition under 37 CFR 1.137(b), filed March 8, 2010, to revive the above-identified application.

The petition is **GRANTED**.

The above-cited application became abandoned for failure to file a proper response in a timely manner to the non-final Office action mailed June 8, 2009, which set a shortened statutory period for reply of three (3) months. Extensions of time were available pursuant to 37 CFR 1.136(a). The application became abandoned on May 9, 2009. A Notice of Abandonment was mailed on December 17, 2009.

The amendment filed March 8, 2010, is noted.

The request for an extension of time within the third month is noted, but cannot be granted as the request was made outside the maximum statutory period for reply to the non-final Office action. The amount of $1,110.00 will be refunded in due course.

The application is being forwarded to Technology Center 2600, GAU 2611 for further processing.

Telephone inquiries concerning this decision should be directed to the undersigned at (571) 272-3222.

Kenya A. McLaughlin
Petitions Attorney
Office of Petitions

UNITED STATES PATENT AND TRADEMARK OFFICE

Commissioner for Patents
United States Patent and Trademark Office
P.O. Box 1450
Alexandria, VA 22313-1450
www.uspto.gov

VERTEX PHARMACEUTICALS, INC.
130 WAVERLY STREET
CAMBRIDGE, MA 02139-4242

COPY MAILED
FEB 26 2010

In re Application of
Hayley Binch, et. al.
Application No. 11/492,643
Filed: July 21, 2006
Attorney Docket No. VPI/05-141US

ON PETITION

This is a decision on the petition under 37 CFR 1.137(b), filed August 4, 2009, to revive the above-identified application.

The instant petition is not signed by an attorney of record. However, in accordance with 37 CFR 1.34(a), the signature of H. Joon Chung appearing on the petition shall constitute a representation to the United States Patent and Trademark Office that he/she is authorized to represent the particular party on whose behalf he/she acts.

The application became abandoned for failure to file a complete reply to the Notice of Non-Compliant Amendment (37 CFR 1.121) mailed on November 19, 2008. A Notice of Abandonment was mailed on June 24, 2009.

The petition satisfies the requirements of 37 CFR 1.137(b) in that petitioner has supplied (1) the reply in the form of an amendment; (2) the petition fee of $1,620; and (3) a proper statement of unintentional delay. Therefore, the petition is **GRANTED**.

This application file is being referred to Technology Center Art Unit 1624 for review of the amendment filed with the present petition.

Telephone inquiries concerning this decision should be directed to the undersigned at (571) 272-3226.

Andrea Smith
Petitions Examiner
Office of Petitions

UNITED STATES PATENT AND TRADEMARK OFFICE

Commissioner for Patents
United States Patent and Trademark Office
P. O. Box 1450
Alexandria, VA 22313-1450
www. uspto. gov

LADAS & PARRY LLP
224 SOUTH MICHIGAN AVENUE
SUITE 1600
CHICAGO, IL 60604

COPY MAILED

JAN 1 8 2008

OFFICE OF PETITIONS

In re Application of :
Michael Wojcik et al :
Application No. 11/492,651 : ON PETITION
Filed: July 25, 2006 :
Attorney Docket No. CU-4694 BSE/BWH :

This is a decision on the petition under 37 CFR 1.137(b), filed September 18, 2007, to revive the above-identified application.

The petition is **GRANTED**.

The above-identified application became abandoned for failure to reply in a timely manner to the non-final Office action mailed March 8, 2007, which set a shortened statutory period for reply of three (3) months. No extension of time under the provisions of 37 CFR 1.136(a) were obtained. Accordingly, the above-identified application became abandoned on June 9, 2007.

An extension of time under 37 CFR 1.136 must be filed prior to the expiration of the maximum extendable period for reply. See In re Application of S., 8 USPQ2d 1630, 1631 (Comm'r Pats. 1988). Accordingly, since the $510 extension of time submitted with the petition on September 18, 2007 was subsequent to the maximum extendable period for reply, this fee is unnecessary and will be credited to petitioner's deposit account.

Telephone inquiries concerning this decision should be directed to Irvin Dingle at (571) 272-3210.

This matter is being referred to Technology Center AU 3751 for further processing.

Irvin Dingle
Petitions Examiner
Office of Petitions

UNITED STATES PATENT AND TRADEMARK OFFICE

Commissioner for Patents
United States Patent and Trademark Office
P.O. Box 1450
Alexandria, VA 22313-1450
www.uspto.gov

Greenberg, Traurig, LLP
IP Docketing
2450 Colorado Avenue
Suite 400 E
Santa Monica, CA 90404

COPY MAILED

AUG 2 9 2008

In re Application of	:	
Edin Hodzic et al.	:	
Application No. 11/492,673	:	DECISION ON PETITION
Filed: July 24, 2006	:	TO WITHDRAW
Attorney Docket No. 078297-200501/US	:	FROM RECORD
	:	

This is a decision on the Request to Withdraw as attorney or agent of record under 37 C.F.R. § 1.36(b), filed May 21, 2008.

The request is **moot because a revocation of power of attorney has been previously filed.**

A review of the file record indicates that the power of attorney to John P. Ward and all attorneys/agents associated with customer number 64494 has been revoked by the assignee of the patent application on June 26, 2008. Accordingly, the request to withdraw under 37 C.F.R. § 1.36(b) is moot.

All future communications from the Office will continue to be directed to the below-listed address until otherwise notified by applicant.

Telephone inquires concerning this decision should be directed to Kimberly Inabinet at 571-272-4618.

Kimberly Inabinet
Petitions Examiner
Office of Petitions

cc: Shemwell Mahamedi LLP
4880 Stevens Creek Boulevard
Suite 201
San Jose, CA 95129

UNITED STATES PATENT AND TRADEMARK OFFICE

Commissioner for Patents
United States Patent and Trademark Office
P.O. Box 1450
Alexandria, VA 22313-1450
www.uspto.gov

HARMAN - BRINKS HOFER CHICAGO
Brinks Hofer Gilson & Lione
P.O. Box 10395
Chicago IL 60610

COPY MAILED

JUL 31 2009

OFFICE OF PETITIONS

In re Application of :
Markus Buck et al. :
Application No. 11/492,675 : DECISION ON PETITION
Filed: July 25, 2006 : TO WITHDRAW
Attorney Docket No. 11336/1453 (P05124US) : FROM RECORD
:

This is a decision on the Request to Withdraw as attorney or agent of record under 37 C.F.R. § 1.36(b), filed June 15, 2009.

The request is **APPROVED**.

A grantable request to withdraw as attorney/agent of record must be signed by every attorney/agent seeking to withdraw or contain a clear indication that one attorney is signing on behalf of another/others. A request to withdraw will not be approved unless at least 30 (thirty) days would remain between the date of approval and the later of the expiration date of a time to file a response or the expiration date of the maximum time period which can be extended under 37 C.F.R. § 1.136(a).

The request was signed by John F. Nethery on behalf of all attorneys/agents of record. All attorneys/agents of record have been withdrawn.

Applicant is reminded that there is no attorney of record at this time.

The request to change the correspondence of record is not acceptable as the requested correspondence address is not that of (1) the first named signing inventor; or (2) an intervening assignee of the entire interest under 37 C.F.R. 3.71. Accordingly, all correspondence will be mailed to the first named signing inventor. A courtesy copy of this decision will be mailed to the address noted on the request. If this person(s) desire to receive future correspondence regarding this application, the proper power of attorney documents must be submitted.

Telephone inquiries concerning this decision should be directed to Kimberly Inabinet at 571-272-4618.

Kimberly Inabinet

Kimberly Inabinet
Petitions Examiner
Office of Petitions

cc: Markus Buck
Lindelestrasse 9
Biberach, Germany 88400

cc: Robert P. Hart, Esq.
Harman International Industries, Incorporated
8500 Balboa Boulevard
Northridge, CA 91329

UNITED STATES PATENT AND TRADEMARK OFFICE

UNITED STATES DEPARTMENT OF COMMERCE
United States Patent and Trademark Office
Address: COMMISSIONER FOR PATENTS
P.O. Box 1450
Alexandria, Virginia 22313-1450
www.uspto.gov

APPLICATION NUMBER	FILING OR 371(C) DATE	FIRST NAMED APPLICANT	ATTY. DOCKET NO./TITLE
11/492,675	07/25/2006	Markus Buck	11336/1453 (P05124US)

CONFIRMATION NO. 6883

81166
HARMAN - BRINKS HOFER CHICAGO
Brinks Hofer Gilson & Lione
P.O. Box 10395
Chicago, IL 60610

POWER OF ATTORNEY NOTICE

OC000000037163643

Date Mailed: 07/31/2009

NOTICE REGARDING CHANGE OF POWER OF ATTORNEY

This is in response to the Power of Attorney filed 06/15/2009.

- The withdrawal as attorney in this application has been accepted. Future correspondence will be mailed to the new address of record. 37 CFR 1.33.

/kainabinet/

Office of Data Management, Application Assistance Unit (571) 272-4000, or (571) 272-4200, or 1-888-786-0101

UNITED STATES PATENT AND TRADEMARK OFFICE

Commissioner for Patents
United States Patent and Trademark Office
P.O. Box 1450
Alexandria, VA 22313-1450
www.uspto.gov

Foley & Lardner LLP
111 HUNTINGTON AVENUE
26TH FLOOR
BOSTON MA 02199-7610

MAILED

JUN 29 2010

OFFICE OF PETITIONS

In re Application of :
Demko et al. :
Application No. 11/492,692 : ON APPLICATION FOR
Filed: July 24, 2006 : PATENT TERM ADJUSTMENT
Atty Docket No. 096171-0588 :

This is in response to the REQUEST FOR RECONSIDERATION OF PATENT TERM ADJUSTMENT FOR PATENT APPLICATION UNDER 37 C.F.R. § 1.705(b), filed April 26, 2010. Applicants submit that the correct patent term adjustment to be indicated on the patent is nine hundred four (904) days, not five hundred twenty-two (522) days as calculated by the Office as of the mailing of the initial determination of patent term adjustment. Applicants request this correction solely on the basis that the Office will take in excess of three years to issue this patent[1].

As the instant application for patent term adjustment requests reconsideration of the patent term adjustment as it relates to the Office's failure to issue the patent within 3 years of the filing date, the application for patent term adjustment under 37 CFR 1.705(b) is **DISMISSED as PREMATURE**.

Knowledge of the actual date the patent issues is required to calculate the amount, if any, of additional patent term patentees are entitled to for Office failure to issue the patent within 3 years. See § 1.702(b). The computer will not undertake the § 1.702(b) calculation until the actual date of issuance of the patent has been determined. Likewise, the computer will not calculate any further Office delay under § 1.702(a)(4) or applicant delay under § 1.704(c)(10) until the actual date of

[1] Applicants' calculation of PTA is based upon a projected patent grant date of August 10, 2010.

issuance of the patent has been determined. As such, the Office can not make a determination on the correctness of the patent term adjustment until the patent has issued.

Requesting reconsideration of the patent term adjustment to be indicated on the patent under 37 CFR 1.705(b) based on the initial determination of patent term adjustment and a projected issuance date of the patent is premature. Accordingly, it is appropriate to dismiss as premature such a request.

Rather than file an application for patent term adjustment under 37 CFR 1.705(b) contesting the 37 CFR 1.702(b) calculation at the time of the mailing of the notice of allowance, applicants are advised that they may wait until the time of the issuance of the patent and file a request for reconsideration of the patent term adjustment pursuant to 37 CFR 1.705(d). As the USPTO does not calculate the amount of time earned pursuant to 37 CFR 1.702(b) until the time of the issuance of the patent, the Office will consider any request for reconsideration of the patent term adjustment due to an error in the calculation of 37 CFR 1.702(b) to be timely if the request for reconsideration is filed within two months of the issuance of the patent. However, as to all other bases for contesting the initial determination of patent term adjustment received with the notice of allowance, applicants must timely file an application for patent term adjustment prior to the payment of the issue fee[2].

The Office acknowledges submission of the $200.00 fee set forth in 37 CFR 1.18(e) for consideration of the application for patent term adjustment under 37 CFR 1.705(b). This fee is required and will not be refunded.

Any request for reconsideration of the patent term adjustment indicated on the patent must be timely filed within 2 months

---

[2] For example, if applicant disputes both the calculation of patent term adjustment under 37 CFR 1.702(a)(1) for Office failure to mail a first Office action or notice of allowance not later than fourteen months after the date on which the application was filed and under 37 CFR 1.702(b) for Office failure to issue a patent within three years of the actual filing date of the application, then applicant must still timely file an application for patent term adjustment prior to the payment of the issue fee to contest the calculation of Office delay in issuing a first Office action or notice of allowance. See 37 CFR 1.705(b) and 35 U.S.C. 154(b)(3)(B). A dispute as to the calculation of the §1.702(a)(1) period raised on request for reconsideration of patent term adjustment under 37 CFR 1.705(d) will be dismissed as untimely filed.

after issuance pursuant to 37 CFR 1.705(d) and must include payment of the required fee under 37 CFR 1.18(e).

The Office of Data Management has been advised of this decision. This application is being referred to the Office of Data Management for issuance of the patent.

Telephone inquiries specific to this decision should be directed to the undersigned at (571) 272-3230.

Shirene Willis Brantley

Shirene Willis Brantley
Senior Petitions Attorney
Office of Petitions

UNITED STATES PATENT AND TRADEMARK OFFICE

UNITED STATES DEPARTMENT OF COMMERCE
United States Patent and Trademark Office
Address: COMMISSIONER FOR PATENTS
P.O. Box 1450
Alexandria, Virginia 22313-1450
www.uspto.gov

KNOBBE MARTENS OLSON & BEAR LLP
2040 MAIN STREET
FOURTEENTH FLOOR
IRVINE, CA 92614

Mail Date: 04/20/2010

Applicant	: Jade H. Alberkrack	: DECISION ON REQUEST FOR
Patent Number	: 7576396	: RECALCULATION of PATENT
Issue Date	: 08/18/2009	: TERM ADJUSTMENT IN VIEW
Appliction No	: 11/492,701	: OF WYETH AND NOTICE OF INTENT TO
Filed	: 07/25/2006	: ISSUE CERTIFICATE OF CORRECTION
		:

The Request for Recalculation is **GRANTED** to the extent indicated.

The patent term adjustment has been determined to be **362** days. The USPTO will *sua sponte* issue a certificate of correction reflecting the amount of PTA days determined by the recalculation.

Prior to the issuance of the certificate of correction, the USPTO will afford patentee an opportunity to be heard and request reconsideration. Accordingly, patentee has **one month or thirty (30) days**, whichever is longer, to file a request for reconsideration of this patent term adjustment calculation. See 35 U.S.C. 154(b)(3)(B)(ii) and 37 CFR 1.322(a)(4). No extensions of time will be granted under 37 CFR 1.136.

Patentee should use document code PET.OP if electronically filing a request for reconsideration of this patent term adjustment calculation. The patentee must also include the information required by 37 CFR 1.705(b)(2) and the fee required by 37 CFR 1.18(e). If patentee does not file a timely request for reconsideration of this patent term adjustment calculation including the information required by 37 CFR 1.705(b)(2) and the fee required by 37 CFR 1.18(e), the USPTO will issue a certificate of correction reflecting the PTA determination noted above.

Patentee should be aware that in order to preserve the right to review in the United States District Court for the District of Columbia of the USPTO patent term adjustment determination, patentee must ensure that he or she also take the steps required under 35 U.S.C. 154(b)(4)(A) in a timely manner. Nothing in the request for recalculation should be construed as providing an alternative time frame for commencing a civil action under 35 U.S.C. 154(b)(4)(A).

Any questions concerning this decision should be directed to the Office of Patent Legal Administration at 571-272-7702.

UNITED STATES PATENT AND TRADEMARK OFFICE

UNITED STATES DEPARTMENT OF COMMERCE
United States Patent and Trademark Office
Address: COMMISSIONER FOR PATENTS
P.O. Box 1450
Alexandria, Virginia 22313-1450
www.uspto.gov

QUINE INTELLECTUAL PROPERTY LAW GROUP, P.C.
P O BOX 458
ALAMEDA, CA 94501

Mail Date: 04/21/2010

Applicant	: J. Wallace Parce	: DECISION ON REQUEST FOR
Patent Number	: 7645397	: RECALCULATION of PATENT
Issue Date	: 01/12/2010	: TERM ADJUSTMENT IN VIEW
Appliction No	: 11/492,717	: OF WYETH AND NOTICE OF INTENT TO
Filed	: 07/24/2006	: ISSUE CERTIFICATE OF CORRECTION
		:

The Request for Recalculation is **GRANTED** to the extent indicated.

The patent term adjustment has been determined to be **389** days. The USPTO will *sua sponte* issue a certificate of correction reflecting the amount of PTA days determined by the recalculation.

Prior to the issuance of the certificate of correction, the USPTO will afford patentee an opportunity to be heard and request reconsideration. Accordingly, patentee has **one month or thirty (30) days**, whichever is longer, to file a request for reconsideration of this patent term adjustment calculation. See 35 U.S.C. 154(b)(3)(B)(ii) and 37 CFR 1.322(a)(4). No extensions of time will be granted under 37 CFR 1.136.

Patentee should use document code PET.OP if electronically filing a request for reconsideration of this patent term adjustment calculation. The patentee must also include the information required by 37 CFR 1.705(b)(2) and the fee required by 37 CFR 1.18(e). If patentee does not file a timely request for reconsideration of this patent term adjustment calculation including the information required by 37 CFR 1.705(b)(2) and the fee required by 37 CFR 1.18(e), the USPTO will issue a certificate of correction reflecting the PTA determination noted above.

Patentee should be aware that in order to preserve the right to review in the United States District Court for the District of Columbia of the USPTO patent term adjustment determination, patentee must ensure that he or she also take the steps required under 35 U.S.C. 154(b)(4)(A) in a timely manner. Nothing in the request for recalculation should be construed as providing an alternative time frame for commencing a civil action under 35 U.S.C. 154(b)(4)(A).

Any questions concerning this decision should be directed to the Office of Patent Legal Administration at 571-272-7702.

UNITED STATES PATENT AND TRADEMARK OFFICE

Commissioner for Patents
United States Patent and Trademark Office
P.O. Box 1450
Alexandria, VA 22313-1450
www.uspto.gov

Mandel & Adriano
572 East Green Street
Ste 203
Pasadena CA 91101

In re Application of:
GEORGOPOULOS, APOSTOLOS P.
Serial No. 11/492,732
Filed: Jul. 25, 2006
Docket: 30452.9US01
Title: METHODS FOR GENERATING A SIGNAL INDICATIVE OF AN INTENDED MOVEMENT

4/28/09

DECISION ON PETITION
UNDER 37 CFR § 1.181

This is a decision on the petitions filed April 22, 2009 under 37 CFR 1.181 requesting supervisory review of the advisory action mailed March 27, 2009. In the petition, petitioner requests entry of the Rule 132 Affidavit by the applicant, Apostolos P. Georgopoulos, filed on March 4, 2009 under 37 CFR 1.116. The petition is being considered pursuant to 37 CFR 1.181.

The petition is granted.

The examiner was requested to enter the Rule 132 Affidavit by the applicant, Apostolos P. Georgopoulos filed on March 4, 2009 for appeal purposes. In the petition, petitioner argues that the applicant's Affidavit was necessitated by the examiner's arguments and interpretation regarding the Nicolelis patent as stated in the Advisory Action of December 3, 2008.

After consulting with the examiner, it was agreed that the Rule 132 Affidavit by the applicant, Apostolos P. Georgopoulos, filed on March 4, 2009 under 37 CFR 1.116 should be entered for appeal purposes. Therefore, the requested relief is hereby granted. Applicant's Rule 132 Affidavit filed on March 4, 2009 will be entered for appeal purposes. A new advisory action will be issued in due course consistent with the present decision. The applicant is reminded that the period to file an appeal brief remains unchanged.

The application is being forwarded to the examiner via his Supervisory Patent Examiner for further processing. Any inquiry regarding this decision should be directed to Henry Yuen, Special Programs Examiner, at (571) 272-4856.

PETITION GRANTED

Donald T. Hajec, Director
Technology Center 3700

UNITED STATES PATENT AND TRADEMARK OFFICE

Commissioner for Patents
United States Patent and Trademark Office
P.O. Box 1450
Alexandria, VA 22313-1450
www.uspto.gov

FISH & RICHARDSON PC
P.O. BOX 1022
MINNEAPOLIS MN 55440-1022

COPY MAILED

FEB 12 2007

OFFICE OF PETITIONS

In re Application of
Ganz, Ganz and Kim
Application No. 11/492,735
Filed: July 25, 2006
Attorney Docket No. 07880-126002
Title: Adaptive media control

DECISION ACCORDING STATUS
UNDER 37 CFR 1.47(a)

This is in response to the petition under 37 CFR 1.47(a), filed July 25, 2006, and supplemented on August 14, 2006.

The petition is **granted**.

Petitioners have shown that the non-signing inventor could not be located to sign the declaration for the above-identified application after diligent efforts to obtain his signature. In the Statement of Facts, J. Robin Rohlicek stated that a copy of the application and the declaration was sent to the non-signing inventor at his last known address via certified mail; however, the package was returned as undeliverable. Petitioner included a copy of the returned envelope, indicating "Attempted – Not Known." Furthermore, Dr. Rohlicek asserted that he conducted a search of the Internet and publications authored by the non-signing inventor; however, the search did not yield a recent correspondence address.

The above-identified application and papers have been reviewed and found in compliance with 37 CFR 1.47(a). This application is hereby accorded Rule 1.47(a) status. As provided in Rule 1.47(c), this Office will forward notice of this application's filing to the non-signing inventor at the address given in the present petition. Notice of the filing of this application will also be published in the Official Gazette.

The application is being referred to Technology Center Art Unit 2732 for examination in due course.

Telephone inquiries regarding this decision should be directed to the undersigned at (571) 272-3211.

C. T. Donnell

Christina Tartera Donnell
Senior Petitions Attorney
Office of Petitions

SPE RESPONSE FOR CERTIFICATE OF CORRECTION

Paper No.: _____

DATE : 1/23/09

TO SPE OF : ART UNIT 2419

SUBJECT : Request for Certificate of Correction for Appl. No.: 11492735 Patent No.: 7460514 B2

Please respond to this request for a certificate of correction within 7 days.

FOR IFW FILES:

Please review the requested changes/corrections as shown in the **COCIN** document(s) in the IFW application image. No new matter should be introduced, nor should the scope or meaning of the claims be changed.

Please complete the response (see below) and forward the completed response to scanning using document code **COCX**.

FOR PAPER FILES:

Please review the requested changes/corrections as shown in the attached certificate of correction. Please complete this form (see below) and forward it with the file to:

Certificates of Correction Branch (CofC)
South Tower - 9A22
Palm Location 7580
You can fax the Directors/SPE response to 571.270.9990

Lamonte M. Newsome
Certificates of Correction Branch
703-308-9390 ext. 112

Thank You For Your Assistance

The request for issuing the above-identified correction(s) is hereby:
Note your decision on the appropriate box.

☒ **Approved**	All changes apply.
☐ **Approved in Part**	Specify below which changes **do not** apply.
☐ **Denied**	State the reasons for denial below.

Comments: _____

1/27/09 2419

PAGE 2/3 * RCVD AT 1/27/2009 11:27:29 AM [Eastern Standard Time] * SVR:USPTO-EFXRF-4/11 * DNIS:2709990 * CSID: * DURATION (mm-ss):04-30

UNITED STATES PATENT AND TRADEMARK OFFICE

COMMISSIONER FOR PATENTS
UNITED STATES PATENT AND TRADEMARK OFFICE
P.O. BOX 1450
ALEXANDRIA, VA 22313-1450
www.uspto.gov

CROWELL & MORING LLP
INTELLECTUAL PROPERTY GROUP
P.O. BOX 14300
WASHINGTON DC 20044-4300

COPY MAILED

DEC 31 2007

OFFICE OF PETITIONS

In re Application of :
Emmersberger : DECISION ON APPLICATION
Application No. 11/492,774 : FOR PATENT TERM ADJUSTMENT
Filed: July 26, 2006 :
Atty. Dkt. No.: 080437.57905US :

This is a decision on the "REQUEST FOR RECONSIDERATION OF PATENT TERM ADJUSTMENT IN NOTICE OF ALLOWANCE UNDER 37 C.F.R. § 1.705(b)," filed October 25, 2007.. This matter is being properly treated as an application for patent term adjustment pursuant to 37 CFR 1.705(b).

The application for patent term adjustment ("PTA") under 37 CFR 1.705(b) is hereby **GRANTED**.

Applicant requests that the Determination of Patent Term Adjustment be corrected from zero days, as indicated on the Determination of Patent Term Adjustment mailed October 15, 2007, to an adjustment of seven days.

The correct PTA at the time of the allowance is seven days, as argued by applicants.

Applicant argues that the application is entitled to an adjustment of seven days in connection with the mailing of the Notice of Allowance on October 15, 2007.

A review of the record reveals that a non-final Office action was mailed March 28, 2007. A response to the non-final Office action was timely submitted June 8, 2007. The Notice of Allowance was mailed October 15, 2007. Thus, in accordance with 37 CFR 1.702(a)(2), the application is entitled to an adjustment of seven days. The adjustment began October 9, 2007, the day after the date that is three months after the date that a reply to the non-final Office action was received, and ended October 15, 2007, the date the Notice of Allowance was mailed. See, 37 CFR 1.703(a)(2).

In review thereof, at the time of allowance, the application is entitled to an adjustment of seven days, as argued by applicant.

The required PTA application fee of $200.00 has been charged to applicant's deposit account as authorized.

Applicants are further advised that the patent term adjustment indicated in the patent will include any additional patent term accrued pursuant to §§ 1.702(a)(4) and 1.702(b).

The application file is being forwarded to the Office of Patent Publications for issuance of a patent.

Telephone inquiries specific to this matter should be directed to Petitions Attorney Alesia M. Brown at (571) 272-3205.

Kery A Fries

Kery Fries
Senior Legal Advisor
Office of Patent Legal Administration
Office of Deputy Commissioner
for Patent Examination Policy

Enclosure: Adjusted PAIR Calculation

Day : Friday
Date: 12/28/2007

PALM INTRANET

Time: 13:26:02

PTA Calculations for Application: 11/492774			
Application Filing Date:	07/26/2006	PTO Delay (PTO):	0
Issue Date of Patent:		Three Years:	0
Pre-Issue Petitions:	0	Applicant Delay (APPL):	0
Post-Issue Petitions:	0	Total PTA (days):	7
PTO Delay Adjustment:	7		

File Contents History

Number	Date	Contents Description	PTO	APPL	START
31	12/28/2007	ADJUSTMENT OF PTA CALCULATION BY PTO	7		
23	10/15/2007	MAIL NOTICE OF ALLOWANCE			
22	10/13/2007	ISSUE REVISION COMPLETED			
21	10/13/2007	DOCUMENT VERIFICATION			
20	10/13/2007	NOTICE OF ALLOWANCE DATA VERIFICATION COMPLETED			
19	10/13/2007	NOTICE OF ALLOWABILITY			
18	05/29/2007	EXAMINER INTERVIEW SUMMARY RECORD (PTOL - 413)			
17	03/28/2007	MAIL SUPPLEMENTAL NON-FINAL ACTION			
16	03/27/2007	SUPPLEMENTAL NON-FINAL ACTION			
15	03/21/2007	MAIL NON-FINAL REJECTION			
14	03/19/2007	NON-FINAL REJECTION			
13	07/26/2006	INFORMATION DISCLOSURE STATEMENT CONSIDERED			
12	01/16/2007	IFW TSS PROCESSING BY TECH CENTER COMPLETE			
11	01/16/2007	CASE DOCKETED TO EXAMINER IN GAU			
10	07/26/2006	REQUEST FOR FOREIGN PRIORITY (PRIORITY PAPERS MAY BE INCLUDED)			
9.7	07/26/2006	INFORMATION DISCLOSURE STATEMENT (IDS) FILED			
9	07/26/2006	INFORMATION DISCLOSURE STATEMENT (IDS) FILED			
8	08/11/2006	APPLICATION RETURN FROM OIPE			
7	08/11/2006	APPLICATION IS NOW COMPLETE			
6	08/11/2006	APPLICATION RETURN TO OIPE			
5	08/10/2006	APPLICATION DISPATCHED FROM OIPE			

4	08/10/2006	APPLICATION IS NOW COMPLETE			
3	08/03/2006	CLEARED BY OIPE CSR			
2	07/29/2006	IFW SCAN & PACR AUTO SECURITY REVIEW			
1	07/26/2006	INITIAL EXAM TEAM NN			

Search Another: Application# [ ] Search

EXPLANATION OF PTA CALCULATION

EXPLANATION OF PTE CALCULATION

To go back, right click here and select Back. To go forward, right click here and select Forward. To refresh, right click here and select Refresh.

Back to OASIS | Home page

UNITED STATES PATENT AND TRADEMARK OFFICE

Commissioner for Patents
United States Patent and Trademark Office
P.O. Box 1450
Alexandria, VA 22313-1450
www.uspto.gov

Customer# 25227
MORRISON & FOERSTER LLP
1650 TYSONS BOULEVARD
SUITE 400
MCLEAN, VA 22102

COPY MAILED

JUL 11 2007

OFFICE OF PETITIONS

In re Application of :
WANG, Li-Ping et al. :
Application No. 11/492,798 : DECISION ON PETITION
Filed: July 26, 2006 : TO WITHDRAW
Attorney Docket No. **146712017900** : FROM RECORD
:

This is a decision on the Request to Withdraw as attorney or agent under 37 C.F.R. § 1.36(b) filed March 30, 2007.

The request is **NOT APPROVED**.

A review of the file record indicates that Customer No. 25227 does not have power of attorney in this patent application. See 37 C.F.R. § 10.40. Accordingly, the request to withdraw under 37 C.F.R. § 1.36(b) is not applicable.

The power of attorney and address of record will remain with customer no. 50268, until properly notified by applicant.

Telephone inquires concerning this decision should be directed to Michelle R. Eason at 571-272-4231.

T. Williams

Terri Williams
Petitions Examiner
Office of Petitions

cc: **DARBY & DARBY P.C.**
1500 K. STREET, N.W.
SUITE 250
WASHINGTON, D.C. 20005-1714

SPE RESPONSE FOR CERTIFICATE OF CORRECTION

Paper No.: _____

DATE : 11-23-09

TO SPE OF : ART UNIT 2855

SUBJECT : Request for Certificate of Correction for Appl. No.: 11/492818 Patent No.: 7421906

Please respond to this request for a certificate of correction within 7 days.

FOR IFW FILES:

Please review the requested changes/corrections as shown in the **COCIN** document(s) in the IFW application image. No new matter should be introduced, nor should the scope or meaning of the claims be changed.

Please complete the response (see below) and forward the completed response to scanning using document code **COCX**.

FOR PAPER FILES:

Please review the requested changes/corrections as shown in the attached certificate of correction. Please complete this form (see below) and forward it with the file to:

Certificates of Correction Branch (CofC)
Randolph Square – 9D10-A
Palm Location 7580

Angela Green 703-756-1541
Certificates of Correction Branch
703-756-1814

Thank You For Your Assistance

The request for issuing the above-identified correction(s) is hereby:
Note your decision on the appropriate box.

- ☒ **Approved** — **All** changes apply.
- ☐ **Approved in Part** — Specify below which changes **do not** apply.
- ☐ **Denied** — State the reasons for denial below.

Comments: _____

_____

_____

_____

_____

Li M Gutta 2855
SPE **Art Unit**

SEP 03 2008
PATENT & TRADEMARK OFFICE

PTO/SB/20 (01-07)
Approved for use through 12/31/2008. OMB 0651-0058
U.S. Patent and Trademark Office; U.S DEPARTMENT OF COMMERCE
Under the Paperwork Reduction Act of 1995, no persons are required to respond to a collection of information unless it displays a valid OMB control number.

REQUEST FOR PARTICIPATION IN THE PATENT PROSECUTION HIGHWAY (PPH) PILOT PROGRAM BETWEEN THE JPO AND THE USPTO

Application No.:	11/492,832	First Named Inventor:	MIZUTANI
Filing Date:	July 26, 2006	Attorney Docket No.:	HITA.0857

Title of the Invention: **PASSIVE OPTICAL NETWORK (PON) SYSTEM**

THIS REQUEST FOR PARTICIPATION IN THE PPH PILOT PROGRAM MUST BE FAXED TO: THE OFFICE OF THE COMMISSIONER FOR PATENTS AT 571-273-0125 DIRECTED TO THE ATTENTION OF MAGDALEN GREENLIEF

APPLICANT HEREBY REQUESTS PARTICIPATION IN THE PATENT PROSECUTION HIGHWAY (PPH) PILOT PROGRAM AND PETITIONS TO MAKE THE ABOVE-IDENTIFIED APPLICATION SPECIAL UNDER THE PPH PILOT PROGRAM.

The above-identified application validly claims priority under 35 U.S.C. 119(a) and 37 CFR 1.55 to one or more corresponding JPO application(s).

The JPO application number(s) is/are: 2006-080537

The filing date of the JPO application(s) is/are: March 23, 2006

I. List of Required Documents:

a. **A copy of all JPO office actions (excluding "Decision to Grant a Patent"*) in the above-identified JPO application(s)**

☒ Is attached

☐ Is available via Dossier Access System. Applicant hereby requests that the USPTO obtain these documents via the Dossier Access system

*It is not necessary to submit a copy of the "Decision to Grant a Patent" and an English translation thereof.

b. **A copy of all claims which were determined to be patentable by the JPO in the above-identified JPO application(s)**

☒ Is attached

☐ Is available via Dossier Access System. Applicant hereby requests that the USPTO obtain these documents via the Dossier Access system

c. **English translations of the documents in a. and b. above along with a statement that the English translations are accurate are attached.**

d. **(1) An information disclosure statement listing the documents cited in the JPO office actions**

☐ Is attached.

☒ Has already been filed in the above-identified U.S. application on

(2) Copies of all documents (except for U.S. patents or U.S. patent application publications)

☒ Are attached.

☐ Have already been filed in the above-identified U.S. application on

This collection of information is required by 35 U.S.C. 119, 37 CFR 1.55, and 37 CFR 1.102(d). The information is required to obtain or retain a benefit by the public, which is to file (and by the USPTO to process) an application. Confidentiality is governed by 35 U.S.C. 122 and 37 CFR 1.11 and 1.14. This collection is estimated to take 2 hours to complete, including gathering, preparing, and submitting the completed application form to the USPTO. Time will vary depending upon the individual case. Any comments on the amount of time you require to complete this form and/or suggestions for reducing this burden should be sent to the Chief Information Officer, U.S. Patent and Trademark Office, U.S. Department of Commerce, P.O. Box 1450, Alexandria, VA 22313-1450. DO NOT SEND FEES OR COMPLETED FORMS TO THIS ADDRESS. **FAX COMPLETED FORMS TO: Office of the Commissioner for Patents at 571-273-0125, Attention: Magdalen Greenlief**

PTO/SB/20 (01-07)
Approved for use through 12/31/2008. OMB 0651-0058
U.S. Patent and Trademark Office; U.S DEPARTMENT OF COMMERCE
Under the Paperwork Reduction Act of 1995, no persons are required to respond to a collection of information unless it displays a valid OMB control number.

REQUEST FOR PARTICIPATION IN THE PATENT PROSECUTION HIGHWAY (PPH) PILOT PROGRAM BETWEEN THE JPO AND THE USPTO

(continued)

Application No.:	11/492,832	First Named Inventor:	MIZUTANI

II. Claims Correspondence Table:

Claims in US Application	Patentable Claims In JP Application	Explanation regarding the correspondence
1	1	
2 (Canceled)		
3 (Canceled)		
4 (Canceled)		
5 (Canceled)		
6	4	
7	5	
8	6	
9	7	
10	8	
11	9	
12	2	
13	3	

III. All the claims in the US application sufficiently correspond to the patentable/allowable claims in the JPO application.

IV. Payment of Fees: $130.00

The Commissioner is hereby authorized to charge the petition fee under 37 CFR 1.17(h) as required by 37 CFR 1.102(d) to

☒ **Deposit Account No. 081480**

☐ **Credit Card. Credit Card Payment Form (PTO-2038) is attached.**

Signature	Date September 3, 2008
Name (Print/Typed) Juan Carlos A. Marquez	Registration Number 34,072

UNITED STATES PATENT AND TRADEMARK OFFICE

Commissioner for Patents
United States Patent and Trademark Office
P.O. Box 1450
Alexandria, VA 22313-1450
www.uspto.gov

MAIL

MAY 06 2009

DIRECTOR OFFICE
TECHNOLOGY CENTER 2600

Stanley P. Fisher & Reed Smith LLP
3110 Fairview Park Drive, Suite 1400
Falls Church VA 22042-4503

In re Application of: **Mizutani et al**
Application No. 11/492,832
Filed: July 26, 2006

For: **PASSIVE OPTICAL NETWORK (PON) SYSTEM**

DECISION ON REQUEST TO PARTICIPATE IN PATENT PROSECUTION HIGHWAY PROGRAM AND PETITION TO MAKE SPECIAL UNDER 37 CFR 1.102(d)

This is a decision on the request to participate in the Patent Prosecution Highway (PPH) program and the petition under 37 CFR 1.102(d), filed September 03, 2008, to make the above-identified application special.

The petition is **GRANTED.**

A grantable request to participate in the PPH program and petition to make special require:

(1) The U.S. application must validly claim priority under 35 U.S.C. 119(a) to one or more applications filed in the JPO;

(2) Applicant must submit a copy of the allowable/patentable claim(s) from the JPO application(s) along with an English translation thereof and a statement that the English translation is accurate;

(3) All the claims in the U.S. application must sufficiently correspond or be amended to sufficiently correspond to the allowable/patentable claim(s) in the JPO application(s);

(4) Examination of the U.S. application has not begun;

(5) Applicant must submit a copy of the latest office actions (other than "Decision to Grant a Patent") from each of the JPO application(s) containing the allowable/patentable claim(s) along with an English translation thereof and a statement that the English translation is accurate;

(6) Applicant must submit an IDS listing the documents cited by the JPO examiner in the JPO office action along with copies of documents except U.S. patents or U.S. patent application publications; and

(7) The required petition fee under 37 CFR 1.17(h).

The request to participate in the PPH program and petition are found to comply with the above requirements. Accordingly, the above-identified application has been accorded "special" status.

Telephone inquiries concerning this decision should be directed to Ricky Ngo 571-272-3139.

All other inquiries concerning the examination or status of the application is accessible in the PAIR system at http://www.uspto.gov/ebc/index.html.

The application is being forwarded to the examiner for action on the merits commensurate with this decision.

/Ricky Ngo/

_____

Ricky Ngo
Supervisory Patent Examiner, Technology Center 2400
571-272-3139

UNITED STATES PATENT AND TRADEMARK OFFICE

Commissioner for Patents
United States Patent and Trademark Office
P.O. Box 1450
Alexandria, VA 22313-1450
www.uspto.gov

HOLLAND & KNIGHT, LLP
2099 PENNSYLVANIA AVE.
SUITE 100
WASHINGTON, DC 20006

COPY MAILED

MAR 0 6 2009

OFFICE OF PETITIONS

In re Application of :
Woo Joo Lah, et. al. :
Application No. 11/492,976 : ON PETITION
Filed: July 26, 2006 :
Attorney Docket No. 54658-005001 :

This is a decision on the petition under 37 CFR 1.137(b), on January 6, 2009, to revive the above-identified application.

The application became abandoned for failure to timely respond to the Restriction/Election Requirement mailed April 28, 2008. A Notice of Abandonment was mailed on November 13, 2008.

The petition satisfies the requirements of 37 CFR 1.137(b), in that, petitioner has supplied (1) an election; (2) the petition fee of $810; and (3) a proper statement of unintentional delay. Therefore, the petition is **GRANTED**.

The Office acknowledges receipt of $1,175 for a five month extension of time filed on January 6, 2009. However, an extension of time under 37 CFR 1.136 must be filed prior to the expiration of the maximum extendable period for reply. *See* In re Application of S., 8 USPQ2d 1630, 1631 (Comm'r Pats. 1988). Since the $1,175 extension of time fee was subsequent to the maximum extendable period for reply, this fee is unnecessary and petitioner may request a refund of this fee by writing to the following address: Mail Stop 16, Commissioner for Patents, P. O. Box 1450, Alexandria, VA 22313-1450. A copy of this decision should accompany petitioner's request.

This application file is being referred to Technology Center Art Unit 2873, for further processing. Telephone inquiries concerning this decision should be directed to the undersigned at (571) 272-3226.

Andrea Smith
Petitions Examiner
Office of Petitions

UNITED STATES PATENT AND TRADEMARK OFFICE

Commissioner for Patents
United States Patent and Trademark Office
P.O. Box 1450
Alexandria, VA 22313-1450
www.uspto.gov

CLEMENTS BERNARD MILLER
1901 ROXBOROUGH ROAD
SUITE 300
CHARLOTTE, NC 28211

COPY MAILED

FEB 19 2008

In re Application of

SIMON, Jeffrey A. et al.
Application No. 11/492,977
Filed: July 26, 2006
Attorney Docket No. **26918.2.3**

DECISION ON PETITION
TO WITHDRAW
FROM RECORD

This is a decision on the Request to Withdraw as attorney or agent of record under 37 C.F.R. § 1.36(b), filed January 14, 2008.

The request is **NOT APPROVED**.

A grantable request to withdraw as attorney/agent of record must be signed by every attorney/agent seeking to withdraw or contain a clear indication that one attorney is signing on behalf of another/others. A request to withdraw will not be approved unless at least 30 (thirty) days would remain between the date of approval and the later of the expiration date of a time to file a response or the expiration date of the maximum time period which can be extended under 37 C.F.R. § 1.136(a).

The Office cannot approve the request at this time since the reasons provided do not meet any of the conditions under the mandatory or permissive categories enumerated in 37 CFR 10.40. Section 10.40 of Title 37 of the Code of Federal Regulation states, "[a] practitioner shall not withdraw from employment in a proceeding before the Office without permission from the Office[.]" More specifically, 37 CFR 10.40 states, "[i]f paragraph (b) of this section is not applicable, a practitioner may not request permission to withdraw in matter pending before the Office unless such request or such withdrawal is" for one the permissive reasons listed in 37 CFR 10.40(c). The reasons set forth in the request, (file has been transferred to new attorney), does not meet any the conditions set forth in 37 CFR 10.40.

All future communications from the Office will continue to be directed to the above-listed address until otherwise notified by applicant.

Telephone inquiries concerning this decision should be directed to the undersigned at 571-272- 4231.

Michelle R. Eason
Paralegal Specialist
Office of Petitions

cc: **RICHARD A. WALKER**
BAKER, DONELSON, BEARMAN, CALDWELL
& BERKOWITZ, PC
SIX CONCOURSE PARKWAY, SUITE 3100
ATLANTA, GA 30328

UNITED STATES PATENT AND TRADEMARK OFFICE

Commissioner for Patents
United States Patent and Trademark Office
P.O. Box 1450
Alexandria, VA 22313-1450
www.uspto.gov

CLEMENTS BERNARD MILLER
1901 ROXBOROUGH ROAD
SUITE 300
CHARLOTTE, NC 28211

COPY MAILED

MAR 14 2008

OFFICE OF PETITIONS

In re Application of

SIMON, Jeffrey et al.
Application No. 11/492,977
Filed: July 26, 2006
Attorney Docket No. **26918.2.3**

DECISION ON PETITION
TO WITHDRAW
FROM RECORD

This is a decision on the renewed Request to Withdraw as attorney or agent of record under 37 C.F.R. § 1.36(b), filed February 21, 2008.

The request is **APPROVED**.

A grantable request to withdraw as attorney/agent of record must be signed by every attorney/agent seeking to withdraw or contain a clear indication that one attorney is signing on behalf of another/others. A request to withdraw will not be approved unless at least 30 (thirty) days would remain between the date of approval and the later of the expiration date of a time to file a response or the expiration date of the maximum time period which can be extended under 37 C.F.R. § 1.136(a).

The request was signed by Lawrence A. Baratta Jr. on behalf of all attorneys of record who are associated with customer No. 22474. All attorneys/agents associated have been withdrawn. Applicant is reminded that there is no attorney of record at this time.

The request to change the correspondence of record is not acceptable as the requested correspondence address is not that of: (1) the first named signing inventor; or (2) an intervening assignee of the entire interest under 37 C.F.R 3.71. All future communications from the Office will be directed to the first named signing inventor.

There are no outstanding office actions at this time.

Telephone inquiries concerning this decision should be directed to the undersigned at 571-272-4231.

Michelle R. Eason
Paralegal Specialist
Office of Petitions

cc: **JEFFREY A. SIMON**
3320 KEENLAND ROAD
MARIETTA, GA 30062

cc: **WIFIMED, INC.**
2000 RIVEREDGE PARKWAY
SUITE GL100A
ATLANTA, GA 30328

UNITED STATES PATENT AND TRADEMARK OFFICE

Commissioner for Patents
United States Patent and Trademark Office
P.O. Box 1450
Alexandria, VA 22313-1450
www.uspto.gov

NIXON & VANDERHYE, PC
901 NORTH GLEBE ROAD, 11TH FLOOR
ARLINGTON VA 22203

COPY MAILED

MAR 23 2007

OFFICE OF PETITIONS

In re Application of :
Schaeffer, et al. : ON PETITION
Application No.: 11/493,019 :
Filed: July 26, 2006 :
Attorney Docket No.: 839-1584 :
For: A WELDMENT AND A PROCESS USING DUAL WELD WIRES FOR WELDING NICKEL-BASED SUPERALLOYS :

This is a decision on the petition under 37 CFR 1.47(a), filed February 16, 2007.

The petition is **DISMISSED**.

Any request for reconsideration of this decision must be submitted within TWO (2) MONTHS from the mail date of this decision. Extensions of time under 37 CFR 1.136(a) are permitted. Any response should be entitled "Request for Reconsideration of Petition Under 37 CFR 1.47(a)" and may include an oath or declaration executed by the inventor. **Failure to respond will result in abandonment of the application.**

The above-identified application was filed on July 26, 2006 without a fully executed oath or declaration. Accordingly, on August 14, 2006, a "Notice to File Missing Parts of Nonprovisional Application" was mailed, requiring various fees, an executed oath or declaration, and a surcharge for its late filing.

In response, petitioners filed a petition for a four month extension of time and required fee; various fees, a declaration executed by 3 of 8 joint inventors (the originally filed declaration was executed by another 4 of 8 joint inventors); the surcharge; a $130.00 petition fee; and the instant petition. Exhibits/ declarations to the petition establish that a copy of the application and declaration were successfully mailed to non-signing inventor Thaddeus Struskinski's last known address. Mr. Struskinski informed Rebecca Roble, secretary to an attorney of record, that he would not executed the declaration unless he received additional compensation.

Regarding the petition fee, the current Rule 47 petition fee is $200.00. Deposit account no. 14-1140 was charged the $70.00 balance due.

A grantable petition under 37 CFR 1.47(a) requires:

(1) a petition including proof of the pertinent facts establishing that the joint inventor(s) refuses to join, or cannot be found or reached after diligent effort,
(2) a proper oath or Declaration executed by the available joint inventor(s),
(3) the petition fee of $200, and
(4) the last known address of the omitted inventor(s).

This petition lacks item (2) above.

As to item (2), an oath or declaration for the patent application in compliance with 37 CFR 1.63 and 1.64 still has not been presented. The declaration contains a noninitialed, nondated alterations to information for Inventor Doyle C. Lewis. 37 CFR 1.52(c) states that "[a]ny interlineation, erasure, cancellation or other alteration of the application papers filed should be made on or before the signing of the accompanying oath or declaration pursuant to 1.63...." This includes the oath or declaration. The Office will not consider whether noninitialed and or nondated alterations were made before or after signing of the oath or declaration but will require a new oath or declaration.

Fortunately, the deficiencies or inaccuracies relate to a signing inventor. Thus, pursuant to 37 CFR 1.67(a)(2), Inventor Lewis can correct his information on a supplemental declaration identifying the entire inventive entity and their information, but signed only by him.

Another option would be to submit an ADS with correct information.

An oath or declaration in compliance with 37 CFR 1.63 and1.64 signed by the Rule 1.47 applicants on behalf of the non-signing inventor is REQUIRED. See MPEP 409.03(a).

Further correspondence with respect to this matter should be addressed as follows:

By mail: Mail Stop PETITION
Commissioner for Patents
Post Office Box 1450
Alexandria, VA 22313-1450

By hand: U.S. Patent and Trademark Office
Customer Service Window, Mail Stop Petition
Randolph Building
401 Dulany Street
Alexandria, VA 22314

By FAX: (571) 273-8300 - ATTN: Office of Petitions

Telephone inquiries should be directed to the undersigned at (571) 272-3230.

Shirene Willis Brantley
Senior Petitions Attorney
Office of Petitions

UNITED STATES PATENT AND TRADEMARK OFFICE

Commissioner for Patents
United States Patent and Trademark Office
P.O. Box 1450
Alexandria, VA 22313-1450
www.uspto.gov

NIXON & VANDERHYE, PC
901 NORTH GLEBE ROAD, 11TH FLOOR
ARLINGTON VA 22203

COPY MAILED

NOV 0 5 2008

OFFICE OF PETITIONS

In re Application of
Schaeffer, et al.
Application No.: 11/493,019
Filed: July 26, 2006
Attorney Docket No.: 839-1584
For: A WELDMENT AND A PROCESS USING DUAL WELD WIRES FOR WELDING NICKEL-BASED SUPERALLOYS

ON PETITION

This is a decision on the renewed petition under 37 CFR 1.47(a), filed April 16, 2007.

The petition is **GRANTED.**

Petitioners have shown that the non-signing inventor, Thaddeus Struskinski, has refused to join in the filing of the above-identified application.

The application and papers have been reviewed and found in compliance with 37 CFR 1.47(a). This application is hereby accorded Rule 1.47(a) status.

As provided in 37 CFR 1.47(c), this Office will forward notice of this application's filing to the non-signing inventor at the address given in the petition. Notice of the filing of this application will also be published in the Official Gazette.

This application is being referred to Technology Center G.A.U. 4184 for examination in due course.

Telephone inquiries should be directed to the undersigned at (571) 272-3230.

Shirene Willis Brantley
Senior Petitions Attorney
Office of Petitions

UNITED STATES PATENT AND TRADEMARK OFFICE

Commissioner for Patents
United States Patent and Trademark Office
P.O. Box 1450
Alexandria, VA 22313-1450
www.uspto.gov

THADDEUS STRUSINSKI
113 TWIN LAKE DRIVE
SHELBY NC 28152

COPY MAILED

NOV 0 5 2008

OFFICE OF PETITIONS

In re Application of
Schaeffer, et al.
Application No.: 11/493,019
Filed: July 26, 2006
Attorney Docket No.: 839-1584
For: A WELDMENT AND A PROCESS USING DUAL WELD WIRES FOR WELDING NICKEL-BASED SUPERALLOYS

LETTER

Dear Mr. Strusinski:

You are named as a joint inventor in the above-identified United States patent application, filed under the provisions of 35 U.S.C. 116 (United States Code), and 37 CFR 1.47(a), Rules of Practice in Patent Cases. Should a patent be granted on the application you will be designated therein as a joint inventor.

As a named inventor you are entitled to inspect any paper in the file wrapper of the application, order copies of all or any part thereof (at a prepaid cost per 37 CFR 1.19) or make your position of record in the application. Alternatively, you may arrange to do any of the preceding through a registered patent attorney or agent presenting written authorization from you. If you care to join the application, counsel of record (see below) would presumably assist you. Joining the application would entail the filing of an appropriate oath or declaration by you pursuant to 37 CFR 1.63.

Telephone inquiries regarding this communication should be directed to the undersigned at (571) 272-3230. Requests for information regarding your application should be directed to the File Information Unit at (703) 308-2733. Information regarding how to pay for and order a copy of the application, or a specific paper in the application, should be directed to the Certification Division at (571) 272-3150 or 1 (800) 972-6382 (outside the Washington, DC area).

Shirene Willis Brantley
Senior Petitions Attorney
Office of Petitions

ATTORNEYS OF RECORD: NIXON & VANDERHYE, PC
901 NORTH GLEBE ROAD, 11TH FLOOR
ARLINGTON VA 22203

UNITED STATES PATENT AND TRADEMARK OFFICE

Commissioner for Patents
United States Patent and Trademark Office
P.O. Box 1450
Alexandria, VA 22313-1450
www.uspto.gov

EDELL , SHAPIRO & FINNAN , LLC
1901 RESEARCH BOULEVARD , SUITE 400
ROCKVILLE MD 20850

COPY MAILED

SEP 24 2009

OFFICE OF PETITIONS

In re Application of	:	
Mono et al.	:	
Application No. 11/493,028	:	ON PETITION
Filed: July 26, 2006	:	
Attorney Docket No. 3001.0064C	:	

This is a decision on the petition under 37 C.F.R. § 1.137(b), filed July 31, 2009, to revive the above-identified application.

The petition is **GRANTED**.

The petition satisfies the requirements of 37 CFR 1.137(b) in that petitioner has supplied (1) the reply in the form of the Issue Fee Transmittal with payment of the issue and publication fees, (2) the petition fee, and (3) a proper statement of unintentional delay.

Telephone inquiries concerning this decision should be directed to the undersigned at (571) 272-3206.

This matter is being referred to the Office of Data Management for processing into a patent.

Liana Walsh
Petitions Examiner
Office of Petitions

UNITED STATES PATENT AND TRADEMARK OFFICE

UNITED STATES DEPARTMENT OF COMMERCE
United States Patent and Trademark Office
Address: COMMISSIONER FOR PATENTS
P.O. Box 1450
Alexandria, Virginia 22313-1450
www.uspto.gov

APPLICATION NO.	FILING DATE	FIRST NAMED INVENTOR	ATTORNEY DOCKET NO.	CONFIRMATION NO.
11/493,040	07/26/2006	Jean Francois Delhomel	BJS-3665-190	8103

23117 7590 01/30/2009

NIXON & VANDERHYE, PC
901 NORTH GLEBE ROAD, 11TH FLOOR
ARLINGTON, VA 22203

EXAMINER	
SAEED, KAMAL A	

ART UNIT	PAPER NUMBER
1626	

MAIL DATE	DELIVERY MODE
01/30/2009	PAPER

Please find below and/or attached an Office communication concerning this application or proceeding.

The time period for reply, if any, is set in the attached communication.

UNITED STATES PATENT AND TRADEMARK OFFICE

Commissioner for Patents
United States Patent and Trademark Office
P.O. Box 1450
Alexandria, VA 22313-1450
www.uspto.gov

JAN 2 9 2009

NIXON & VANDERHYE, PC
901 NORTH GLEBE ROAD, 11TH FLOOR
ARLINGTON, VA 22203

In re Application of:
Delhomel et al.
Serial No.: 11/493,040
Filed: July 26, 2006
Attorney Docket No.: BJS-3665-190

: PETITION DECISION

This is in response to the petition under 37 CFR § 1.181, filed January 9, 2009. Applicants first request that the finality of the Office action of August 14, 2008 be withdrawn. Secondly, applicants request that the Advisory Action mailed January 8, 2009, which refuses entry of the claim amendment filed under 37 CFR 1.116 on December 15, 2008 after final Office action, be entered and thus, overturned in favor of applicants.

BACKGROUND

The examiner mailed a final Office action on August 14, 2008 setting a three month statutory limit for reply. At the time of this final Office action, claims 1-10 were pending and claim 9 was withdrawn from consideration on the merits as being directed toward a non-elected invention. The examiner rejected claims 1-8 and 10, provisionally, under the judicially-created doctrine of obviousness-type double patenting as being unpatentable over Claims 69, 70, 74, 77, 80, 85, 86, 87, 91-93, 96, 97, and 99-103 (in part) of copending Application No. 10/520,079 and Claims 38-68 of copending Application No. 10/520,078.

Applicants replied to the final Office action by submitting an amendment filed under 37 C.F.R. 1.116 on December 15, 2008. In this reply, applicants submitted remarks, two Terminal Disclaimers in order to obviate the Double Patenting rejections instituted by the examiner and an amendment consisting of the cancellation of withdrawn claim 9.

On January 8, 2009, the examiner mailed an Advisory Action indicating the amendment after final action would not be entered because the amendment raised new issues requiring further consideration and/or search.

In response thereto, applicants filed this petition under 37 CFR § 1.181 on January 9, 2009. In said petition, applicants first request that the finality of the Office action of August 14, 2008 be withdrawn. Secondly, applicants request that the Advisory Action mailed January 8, 2009,

which refuses entry of the claim amendments filed under 37 CFR 1.116 after final Office action, be entered and thus overturned in favor of applicant.

DISCUSSION

The petition and the file history have been carefully considered.

Applicants commence their arguments by indicating that in a telephonic interview conducted between the examiner and the attorney of record in this case, the examiner indicated that the amendment filed after final Office action on December 15, 2008 would not be entered due to the presence of ambiguity in claim 1 pertaining to the dashed line between X2 and the 3 carbon in formula I, and also would not be entered due to the examiner's allegation that claim 1 lacked sufficient enablement (pages 1-2 Petition). Applicants argue that the examiner's statements made in said telephone interview constitute new rejections and that such new rejections were not necessitated by any amendment submitted by applicants. Applicants assert that the rejections alleged by the examiner in the interview should have been placed on the record during the prosecution of this case (pages 1-3 Petition).

In support of their contentions, applicants cite the MPEP § 706.07(a):

> Under present practice, second or any subsequent actions on the merits shall be final, except where the examiner introduces a new ground of rejection that is neither necessitated by applicant's amendment of the claims, nor based on information submitted in an information disclosure statement filed during the period set forth in 37 CFR 1.97(c) with the fee set forth in 37 CFR 1.17(p) (p. 4, Petition)

Applicants additionally point to MPEP § 706.07(c) and MPEP § 707:

> ...(1)...The examination shall be complete with respect both to compliance of the application or patent under reexamination with the applicable statutes and rules and to the patentability of the invention as claimed....(2)...The reasons for any adverse action or any objection or requirement will be stated in an Office action and such information or references will be given as may be useful in aiding the applicant...(3)...The examiner's action will be complete as to all matters...(p. 5, Petition, emphasis omitted herein)
>
> "Whenever, on examination, any claim for a patent is rejected, or any objection...made," notification of the reasons for rejection and/or objection together with such information and references as may be useful in judging the propriety of continuing the prosecution (35 U.S.C. 132) should be given. (p. 5, Petition)
>
> Piecemeal examination should be avoided as much as possible. The examiner ordinarily should reject each claim on all valid grounds available...(p. 6, Petition)

Applicants' arguments pertaining to the alleged improprieties found in the final Office action are solely based upon statements made by the examiner, *ex post facto*, in an interview between applicants' attorney and the examiner which, according to applicants, occurred on January 5, 2009. Determination of whether the final Office action was proper or not is made by analyzing the final Office action in view of the entirety of the record at the time the final Office action was mailed [MPEP § 706.07(a) (*Id.*)]. Comments made by the examiner in a telephone conversation are not considered *per se* rejections as these alleged rejections were not officially presented on

the record by the examiner. Hence, applicants' arguments that the examiner presented new rejections in the final Office action which would preclude the finality of said Office action are not found persuasive.

Applicants argue that in the Advisory Action mailed by the examiner on January 8, 2009, the examiner neglected to provide substantive reasons why the amendment filed December 15, 2008 was denied entry, save for the examiner's indication that the proposed amendment would not be entered because they raised new issues that would have required further consideration and/or search (p. 4, Petition). Applicants traverse the examiner's decision to refuse entry of the amendment submitted after final Office action, asserting that the only claim amendment present in said amendment was the cancellation of claim 9 which was a withdrawn claim (see p. 4, Petition). Applicants urge that their submission after final Office action which served to cancel the non-elected claim 9 and to provide Terminal Disclaimers to obviate the only rejections of record was a clear effort to advance the case to allowance and should have rightfully been entered by the examiner.

It is noted that prosecution after final rejection is governed by 37 C.F.R.§ 1.116 which states, in part:

> (b) After a final rejection or other final action (§ 1.113) in an application or in an ex parte reexamination filed under § 1.510, or an action closing prosecution (§ 1.949) in an inter partes reexamination filed under § 1.913, but before or on the same date of filing an appeal (§ 41.31 or § 41.61 of this title):
> (1) An amendment may be made canceling claims or complying with any requirement of form expressly set forth in a previous Office action;
> (2) An amendment presenting rejected claims in better form for consideration on appeal may be admitted; or
> (3) An amendment touching the merits of the application or patent under reexamination may be admitted upon a showing of good and sufficient reasons why the amendment is necessary and was not earlier presented.

Upon mailing the final Office action in an application, prosecution of the application is closed. Entry of proposed amendments to claims when brought before the examiner when prosecution is closed is limited to amendments which clearly place the claims in better form for appeal, or clearly comply with suggestions raised by the examiner or clearly overcome rejections which can be readily interpreted as allowable subject matter without further undue consideration on the part of the examiner. The Advisory Action serves in-part to communicate to applicants reasons why amendments filed after final Office action will or will not be entered. Providing applicants with particular reasons why an amendment filed after final Office action are not entered provides applicants the opportunity to further amend the claimed invention to place the claims in better condition for allowance or appeal.

The examiner indicated on the Advisory Action form PTOL-303 that the proposed amendments filed after final rejection would not be entered because they raised new issues that would have required further consideration and/or search, however, provided no specific limitations which would have required a new search and/or consideration. It is pointed out that the examiner communicated this information by checking box (3)(a) on the PTOL-303 form. Box (3)(a)

finalizes by stating '(see NOTE below)' which is present in order for the examiner to furnish a communication explaining to applicants exactly what limitations, as amended, would require a further consideration and/or search and reasons in support thereof. However, the examiner neglected to provide any reason why the cancellation of claim 9, being the only claim amendment submitted after final Office action, would require a new search and consideration. Consequently, the examiner has not provided applicants with the requisite knowledge needed in order to advance prosecution of this case.

Nevertheless, is clear that the cancellation of claim 9 by applicants *would not require a new search and consideration* by the examiner considering that claim 9 was previously withdrawn from consideration on the merits as being directed toward a non-elected invention. Such an amendment by applicant serves to merely cancel a withdrawn claim, and is therefore in compliance with 37 C.F.R.§ 1.116 (b) (1). Moreover, the submission of two Terminal Disclaimers which obviate the Double Patenting rejections of record are in direct response to the Double Patenting rejections pending at the time the final Office action was made. The submission of the Terminal Disclaimers, along with the cancellation of claim 9 appear to place the application in condition for allowance considering that the Double patenting rejections were the only rejections made in the final Office action and further considering that claim 9 was the only claim withdrawn from examination on the merits.

Applicants are entitled to a full and fair hearing. Applicants were of the correct understanding, at the time the final Office action was mailed, that the filing of Terminal Disclaimers to obviate the outstanding Double Patenting rejections and the cancellation of withdrawn claim 9 would place the application in condition for allowance. As such, applicants' argument asserting that the Advisory Action was improper and incomplete are found persuasive. Accordingly, the Advisory Action is hereby VACATED and the amendment filed December 15, 2008 is subsequently ENTERED.

Applicants' request to enter the proposed claim amendments filed after final Office action on December 15, 2008 is granted.

DECISION

The petition is **GRANTED IN-PART.**

This application will be forwarded to the examiner to either issue an allowance or to reopen prosecution of this case to institute additional rejections if necessary.

Should there be any questions about this decision please contact Marianne C. Seidel, by letter addressed to Director, TC 1600, at the address listed above, or by telephone at 571-272-0584 or by facsimile sent to the general Office facsimile number, 703-872-9306.

Remy Yucel
Director, Technology Center 1600

UNITED STATES PATENT AND TRADEMARK OFFICE

Commissioner for Patents
United States Patent and Trademark Office
P.O. Box 1450
Alexandria, VA 22313-1450
www.uspto.gov

GATES & COOPER LLP
HOWARD HUGHES CENTER
6701 CENTER DRIVE WEST, SUITE 1050
LOS ANGELES CA 90045

COPY MAILED

MAR 0 2 2007

OFFICE OF PETITIONS

In re Application of	:	
Shah et al.	:	DECISION REFUSING STATUS
Application No.11/493,054	:	UNDER 37 CFR 1.47(a)
Filed: April 4, 2006	:	
Attorney Docket No. G&C 130.80-US-01	:	
Title of Invention: Methods and Materials for Stabilizing Analyte Sensors	:	

This is in response to the petition filed October 13, 2006, under 37 C.F.R. §1.47(a).

The petition under 37 C.F.R. §1.47(a) is **DISMISSED**.

Rule 47 applicant is given TWO MONTHS from the mailing date of this decision to reply, correcting the below-noted deficiencies. Any reply should be entitled "Request for Reconsideration of Petition Under 37 C.F.R. §1.47(a)," and should only address the deficiencies noted below, except that the reply may include an oath or declaration executed by the non-signing inventor. **Failure to respond will result in abandonment of the application**. Any extensions of time will be governed by 37 C.F.R. §1.136(a).

The above-identified application was filed on July 26 2006, without a signed oath or declaration. Accordingly, on August 15, 2006, a "Notice to File Missing Parts of Application" was mailed requiring, for the purposes of this decision, an executed oath or declaration and a $130.00 surcharge for its late filing.

Pursuant to petitioner's request deposit account 50-0494 has been charged the $200.00 petition fee.

A grantable petition under 37 C.F.R. §1.47(a) requires: (1) proof that the non-signing inventor cannot be reached or refuses to sign the oath or declaration after having been presented with the application papers (specification, claims and drawings); (2) an acceptable oath or declaration in compliance with 35 U.S.C. §§115 and 116; (3) the petition fee; and (4) a statement of the last known address of the non-signing inventor.

The instant petition does not satisfy requirements (1).

As to item (1), Rule 47 applicant has failed to show that the non-signing inventor refused to sign the declaration after having been presented with the application papers. The Statement of Facts indicates the applications would be available for review in applicants' Los Angeles Office. MPEP 409.03(d) requires that application papers (specification, including claims, drawings, and oath or declaration) be sent to the last known address of the non-signing inventor or, if the non-signing inventor is represented by counsel, to the address of the non-signing inventor's attorney. The fact that an application may contain proprietary information does not relieve the 37 CFR 1.47 applicant of the responsibility to present the application papers to the inventor if the inventor is willing to receive the papers in order to sign the oath or declaration. Before a refusal can be alleged, applicant must demonstrate a bona fide attempt was made to present a copy of application papers (specification, including claims, drawings, and oath or declaration) to the non-signing inventor. See MPEP 409.03(d).

Further correspondence with respect to this matter should be addressed as follows:

By mail:	Mail Stop Petition Commissioner for Patents P.O. Box 1450 Alexandria, VA 22313-1450
By facsimile:	(571) 273-8300
By delivery service: (FedEx, UPS, DHL, etc.)	U.S. Patent and Trademark Office Customer Service Window, Randolph Building 401 Dulany Street Alexandria, VA 22314

Telephone inquiries related to this decision may be directed to the undersigned at (573) 272-3215.

Charlema R. Grant
Petitions Attorney
Office of Petitions

UNITED STATES PATENT AND TRADEMARK OFFICE

Commissioner for Patents
United States Patent and Trademark Office
P.O. Box 1450
Alexandria, VA 22313-1450
www.uspto.gov

GATES & COOPER LLP
HOWARD HUGHES CENTER
6701 CENTER DRIVE WEST, SUITE 1050
LOS ANGELES CA 90045

COPY MAILED

JUN 0 8 2007

OFFICE OF PETITIONS

In re Application of :
Rajiv Shah, Udo Hoss, Soundararajan Gopikrishnan, Nannette Van Antwerp and Barry Pham :
Application No.11/493,054 :
Filed: July 26, 2006 :
Attorney Docket No. G&C 130.80-US-01 :
Title of Invention: Methods and Materials for Stabilizing Analyte Sensors :

DECISION GRANTING STATUS UNDER 37 CFR 1.47(A)

This is in response to the renewed petition under 37 CFR 1.47(a) filed April 12, 2007.

The petition is GRANTED.

Petitioner has shown that non-signing inventor Hoss has refused to join in the filing of the above-identified application after having been presented with the application papers. The petition attest a copy of the application was sent to non-signing inventor's legal representative. Petitioner has provided evidence of non-signing inventor's express refusal to execute the application papers via his legal representative .

The above-identified application and papers have been reviewed and found in compliance with 37 CFR 1.47(a). This application is hereby accorded Rule 1.47(a) status.

It should be noted that this petition is being granted because petitioner has provided evidence that the application papers were presented to the inventor's attorney. The Office is not convinced that the petition submitted on August 10, 2006 established that the non-signing inventor issued a general refusal to receive or consider papers offered to him as articulated in *In re Gray*, 115 USPQ 80, (Comm'r Pat 1956). Exhibit "C" submitted with the original petition clearly states inventor's willingness "to explore a process for allowing Mr. Hoss to assist MiniMed with your request". This statement does not constitute a general refusal. The August 10, 2006 petition did not establish that a bona fide attempt was made to present the application papers to inventor Hoss.

As provided in Rule 1.47(c), this Office will forward notice of this application's filing to the non-signing inventor at the address given in the petition. Notice of the filing of this application will also be published in the Official Gazette.

application will also be published in the Official Gazette.

After this decision is mailed, the application will be forwarded to the Office of Initial Patent Examination for further processing.

Telephone inquiries regarding this communication should be directed to the undersigned at (571) 272-3215.

Charlema R. Grant

Charlema R. Grant
Petitions Attorney
Office of Petitions

UNITED STATES PATENT AND TRADEMARK OFFICE

Commissioner for Patents
United States Patent and Trademark Office
P.O. Box 1450
Alexandria, VA 22313-1450
www.uspto.gov

COPY MAILED

JUN 08 2007

OFFICE OF PETITIONS

Udo Hoss
4608 Vista Del Monte # 207
Sherman Oaks, CA 91403

In re Application of
Rajiv Shah, Udo Hoss, Soundararajan Gopikrishnan, Nannette Van Antwerp and Barry Pham
Application No.11/493,054
Filed: July 26, 2006
Attorney Docket No. G&C 130.80-US-01
Title of Invention: Methods and Materials for Stabilizing Analyte Sensors

: LETTER

Dear Mr. Hoss :

You are named as a joint inventor in the above-identified United States patent application filed under the provisions of 35 U.S.C. 116 (United States Code) and 37 C.F.R. § 1.47(a), Rules of Practice in Patent Cases. Should a patent be granted on the application you will be designated therein as a joint inventor.

As a named inventor you are entitled to inspect any paper in the file wrapper of the application, order copies of all or any part thereof (at a prepaid cost as per 37 C.F.R. § 1.19) or make your position of record in the application. Alternatively, you may arrange to do any of the preceding through a registered patent attorney or agent presenting written authorization from you. If you care to join the application, applicant (see below) would presumably assist you. Joining in the application would entail the filing of an appropriate oath or declaration by you pursuant to 37 C.F.R. § 1.63.

Telephone inquiries regarding this communication should be directed to Petitions Attorney Charlema R. Grant at (571) 272-3215. Requests for information regarding your application should be directed to the File Information Unit at (703) 308-2733. Information regarding how to pay for and order a copy of the application, or a specific paper in the application, should be directed to Certification Division at (703) 308-9726 or 1-800-972-6382 (outside the Washington D.C. area).

Charlema R. Grant
Petitions Attorney
Office of Petitions

GATES & COOPER LLP
HOWARD HUGHES CENTER
6701 CENTER DRIVE WEST, SUITE 1050
LOS ANGELES CA 90045
ATTN: William Wood

UNITED STATES PATENT AND TRADEMARK OFFICE

Commissioner for Patents
United States Patent and Trademark Office
P.O. Box 1450
Alexandria, VA 22313-1450
www.uspto.gov

JONATHAN O. OWENS
HAVERSTOCK & OWENS LLP
162 NORTH WOLFE ROAD
SUNNYVALE, CA 94086

COPY MAILED

JAN 3 0 2007

OFFICE OF PETITIONS

In re Application of :
Donald Molaro et al :
Application No. 11/493,057 : NOTICE
Filed: July 25, 2006 :
Attorney Docket No. SONY-24901 :

This is a notice regarding your request of August 29, 2006 for acceptance of a fee deficiency submission under 37 CFR 1.28. On September 1, 1998, the Court of Appeals for the Federal Circuit held that 37 CFR 1.28(c) is the sole provision governing the time for correction of the erroneous payment of the issue fee as a small entity. **See DH Technology v. Synergystex International, Inc. 154 F.3d 1333, 47 USPQ2d 1865 (Fed. Cir. Sept. 1, 1998).**

The Office no longer investigates or rejects original or reissue applications under 37 CFR 1.56. **1098 Off. Gaz. Pat. Office 502 (January 3, 1989)**. Therefore, nothing in this Notice is intended to imply that an investigation was done.

Your fee deficiency submission under 37 CFR 1.28 is hereby **ACCEPTED**.

This application is no longer entitled to small entity status. Accordingly, all future fees paid in this application must be paid at the large entity rate, absent further notification from a proper party of a change in status. *See* 37 CFR 1.27(c)(2).

Inquiries related to this communication should be directed to the undersigned at (571) 272-3218.

Frances Hicks
Petitions Examiner
Office of Petitions

UNITED STATES PATENT AND TRADEMARK OFFICE

Commissioner for Patents
United States Patent and Trademark Office
P.O. Box 1450
Alexandria, VA 22313-1450
www.uspto.gov

BRINKS HOFER GILSON & LIONE/INDY/COOK
BRINKS HOFER GILSON & LIONE
201 NORTH ILLINOIS STREET, SUITE 1100
INDIANAPOLIS, IN 46204-4220

COPY MAILED

MAR 01 2010

In re Application of :
Brian C. CASE, et *al.* :
Application No. 11/493,065 : DECISION ON PETITION TO
Filed: July 26, 2006 : WITHDRAW FROM RECORD
Attorney Docket No. **1000-278** :

This is a decision on the Request to Withdraw as attorney or agent of record under 37 C.F.R. § 1.36(b), filed December 15, 2009.

The request is **DISMISSED** as moot.

A review of the file record indicates that the power of attorney to **BRINKS HOFER GILSON & LIONE/INDY/COOK** has been revoked by the assignee of the patent application on January 26, 2010. Accordingly, the request to withdraw under 37 C.F.R. § 1.36(b) is moot.

All future communications from the Office will continue to be directed to the below-listed address until otherwise notified by applicant.

Telephone inquires concerning this decision should be directed to the undersigned at 571-272- 7253.

/Monica A. Graves/
Petitions Examiner, Office of Petitions

cc: **BUCHANAN INTELLECTUAL PROPERTY OFFICE, LLC**
P.O. BOX 700
PERRYSBURG, OH 43552-0700

UNITED STATES PATENT AND TRADEMARK OFFICE

Commissioner for Patents
United States Patent and Trademark Office
P.O. Box 1450
Alexandria, VA 22313-1450
www.uspto.gov

NELSON E. WIDELL
75 WOOSAMONSA RD
PENNINGTON NJ 08534

MAILED

JUN 28 2010

OFFICE OF PETITIONS

In re Application of :
Nelson Eric Widell :
Application No. 11/493,073 : DECISION ON PETITION
Filed: July 26, 2006 : TO WITHDRAW
Attorney Docket No. : FROM RECORD
:

This is a decision on the Request to Withdraw as attorney or agent of record under 37 C.F.R. § 1.36(b), filed June 22, 2010.

The request is **DISMISSED AS MOOT**.

A review of the file record indicates that Vanitha M. Elgart is no longer of record in this application. Accordingly, the request to withdraw under 37 C.F.R. § 1.36(b) is moot.

All future communications from the Office will continue to be directed to the above-listed address until otherwise notified by applicant.

Telephone inquires concerning this decision should be directed to Kimberly Inabinet at 571-272-4618.

/Kimberly Inabinet/

Kimberly Inabinet
Petitions Examiner
Office of Petitions

UNITED STATES PATENT AND TRADEMARK OFFICE

Commissioner for Patents
United States Patent and Trademark Office
P.O. Box 1450
Alexandria, VA 22313-1450
www.uspto.gov

Jenkins, Wilson, Taylor & Hunt, P.A.
Suite 1200, University Tower
3100 Tower Boulevard
Durham, NC 27707

COPY MAILED

DEC 2 1 2007

OFFICE OF PETITIONS

In re Application of	:	
Till Schloesser	:	
Application No. 11/493,082	:	DECISION ON PETITION
Filed: July 26, 2006	:	TO WITHDRAW
Attorney Docket No. 1406/379	:	FROM RECORD
	:	

This is a decision on the Request to Withdraw as attorney or agent of record under 37 C.F.R. § 1.36(b), filed August 3, 2007.

The request is **NOT APPROVED** as moot.

A review of the file record indicates that the power of attorney to Jenkins, Wilson, Taylor & Hunt, P.A. has been revoked by the assignee of the patent application on August 24, 2007. Accordingly, the request to withdraw under 37 C.F.R. § 1.36(b) is moot.

All future communications from the Office will continue to be directed to the below-listed address until otherwise notified by applicant.

Telephone inquires concerning this decision should be directed to Terri Williams at 571-272-2991.

T. Williams

Terri Williams
Petitions Examiner
Office of Petitions

cc: **Eschweiler & Associates LLC**
National City Bank Building
Cleveland, OH 44114

UNITED STATES PATENT AND TRADEMARK OFFICE

Commissioner for Patents
United States Patent and Trademark Office
P.O. Box 1450
Alexandria, VA 22313-1450
www.uspto.gov

FAY SHARPE / XEROX - ROCHESTER
1228 EUCLID AVENUE, 5TH FLOOR
THE HALLE BUILDING
CLEVELAND OH 44115

MAILED

JUN 2 1 2010

OFFICE OF PETITIONS

In re Application of
Cavestro, et al.
Application No. 11/493,085
Filed: July 26, 2006
Attorney Docket No. 20051675 XERZ201221
For: REFERENCE RESOLUTION FOR TEXT ENRICHMENT AND NORMALIZATION IN MINING MIXED DATA

ON PETITION

This is a decision on the petition, filed April 29, 2010, under 37 CFR 1.137(b) to revive the above-identified application.

The petition is **GRANTED**.

The above-identified application became abandoned for failure to timely submit a reply within one month/30 days of the mailing of the October 10, 2008 Office action. No response being received, this application became abandoned on November 11, 2008.

Applicants have submitted an amendment in reply to the October 10, 2008 Office action, an acceptable statement of the unintentional nature of the delay in responding to the October 10, 2008 Office action, and the $1,620.00 petition fee. All of the requirements under 37 CFR 1.137(b) being met, the petition is granted.

After the mailing of this decision, the application will be returned to Technology Center AU 2158 for consideration of the amendment filed on April 29, 2010.

Telephone inquiries should be directed to the undersigned at (571) 272-3230.

Shirene Willis Brantley
Senior Petitions Attorney
Office of Petitions

UNITED STATES PATENT AND TRADEMARK OFFICE

Commissioner for Patents
United States Patent and Trademark Office
P.O. Box 1450
Alexandria, VA 22313-1450
www.uspto.gov

BAKER & MCKENZIE LLP
1114 AVENUE OF THE AMERICAS
NEW YORK, NY 10036

COPY MAILED

SEP 25 2007

OFFICE OF PETITIONS

In re Application of	:	
Monseignat, et al.	:	
Application No. 11/493,097	:	DECISION GRANTING PETITION
Filed: July 26, 2006	:	
Attorney Docket No. 56175356-6	:	

This is a decision on the petition filed August 21, 2007, under 37 CFR 1.10(c) requesting that the above-cited application be accorded a filing date of July 26, 2006, rather than the presently accorded filing date of July 27, 2006. The petition will be treated pursuant to 37 CFR 1.10(d).

Petitioner alleges that the application was deposited with the Express Mail Service on July 26, 2006, notwithstanding the entry of July 27, 2006, as the "date-in" of the Express Mail receipt. In support of the allegation, the petition is accompanied by a copy of the Express Mail receipt for package EQ903847758US displaying a United States Postal Service postmark of July 26, 2006. The tracking number on the Express Mail receipt is the same number found on the application transmittal sheet that accompanied the original application papers. The evidence is convincing that the application papers were deposited on July 26, 2006.

In view of the above, the petition is granted. The new filing date for the above-cited application is July 26, 2006.

The application file is being returned to the Office of Initial Patent Examination for further processing with a filing date of July 26, 2006, and for issuance of a corrected filing receipt.

Any inquiries related to this decision should be directed to the undersigned at (571) 272-3222.

Kenya A. McLaughlin
Petitions Attorney
Office of Petitions

UNITED STATES PATENT AND TRADEMARK OFFICE

Commissioner for Patents
United States Patent and Trademark Office
P.O. Box 1450
Alexandria, VA 22313-1450
www.uspto.gov

Baker & McKenzie, LLP
1114 Avenue of the Americas
New York, NY 10036

COPY MAILED

OCT 0 1 2008

OFFICE OF PETITIONS

In re Application of
Bernard de Monseignat et al.
Application No. 11/493,097
Filed: July 26, 2006
Attorney Docket No. 56175356-6

DECISION ON PETITION
TO WITHDRAW
FROM RECORD

This is a decision on the Request to Withdraw as attorney or agent under 37 C.F.R. § 1.36(b) or 37 C.F.R. § 10.40 filed May 29, 2008.

The request is **APPROVED**.

A grantable request to withdraw as attorney/agent of record must be signed by every attorney/agent seeking to withdraw or contain a clear indication that one attorney is signing on behalf of another/others. The Office requires the practitioner(s) requesting withdrawal to certify that he, she, or they have: (1) given reasonable notice to the client, prior to the expiration of the response period, that the practitioner(s) intends to withdraw from employment; (2) delivered to the client or a duly authorized representative of the client all papers and property (including funds) to which the client is entitled; and (3) notified the client of any responses that may be due and the time frame within which the client must respond, pursuant 37 CFR 10.40(c).

The request was signed by James David Jacobs, on behalf of all attorneys/agents of record. All attorneys/agents of record have been withdrawn.

Applicant is reminded that there is no attorney of record at this time.

The correspondence address has been changed to that of the first signing inventor. The address change is copied below.

Telephone inquiries concerning this decision should be directed to Kimberly Inabinet at 571-272-4618.

Kimberly Inabinet
Petitions Examiner
Office of Petitions

cc: David Thieme
28 Av. De Messine
Paris, France 75008

cc: Bernard de Monseignat
7, Avenue Princesse Alice
Monte Carlo, Monaco 98000

UNITED STATES PATENT AND TRADEMARK OFFICE

UNITED STATES DEPARTMENT OF COMMERCE
United States Patent and Trademark Office
Address: COMMISSIONER FOR PATENTS
P.O. Box 1450
Alexandria, Virginia 22313-1450
www.uspto.gov

APPLICATION NUMBER	FILING OR 371(C) DATE	FIRST NAMED APPLICANT	ATTY. DOCKET NO./TITLE
11/493,097	07/26/2006	Bernard de Monseignat	56175356-6

CONFIRMATION NO. 8433

26453
BAKER & MCKENZIE LLP
1114 AVENUE OF THE AMERICAS
NEW YORK, NY 10036

POWER OF ATTORNEY NOTICE

OC000000032363273

Date Mailed: 10/01/2008

NOTICE REGARDING CHANGE OF POWER OF ATTORNEY

This is in response to the Power of Attorney filed 05/29/2008.

- The withdrawal as attorney in this application has been accepted. Future correspondence will be mailed to the new address of record. 37 CFR 1.33.

/kainabinet/

Office of Data Management, Application Assistance Unit (571) 272-4000, or (571) 272-4200, or 1-888-786-0101

UNITED STATES PATENT AND TRADEMARK OFFICE

Commissioner for Patents
United States Patent and Trademark Office
P.O. Box 1450
Alexandria, VA 22313-1450
www.uspto.gov

MINTZ LEVIN COHN FERRIS GLOVSKY & POPEO
ONE FINANCIAL CENTER
BOSTON MA 02111

MAILED

JUN 07 2010

OFFICE OF PETITIONS

In re Application of :

FEUER, Gerald et al. :
Application No. 11/493,103 : DECISION ON PETITION
Filed: July 25, 2006 : TO WITHDRAW
Attorney Docket No. **36908-518F01US** : FROM RECORD
:

This is a decision on the Request to Withdraw as attorney or agent of record under 37 C.F.R. § 1.36(b), filed May 12, 2010.

The request is **NOT APPROVED**.

The Office has revised its change in procedure for request to withdraw from representation applies to requests filed on or after May 12, 2008.

The Office will no longer accept address changes to a new practitioner or law firm filed with a Request, absent the filing of a power of attorney to the new representative. The Office will either change the correspondence address of record to the most current address information provided for the assignee of the entire interest who properly became of record under 37 CFR 3.71 or, if no assignee of the entire interest has properly been made of record under 37 CFR 3.71, the most current address information provided for the first named inventor.

Accordingly, the request to withdraw from record cannot be approved because the request to change the correspondence address is not that of: (1) the first named inventor; or (2) an assignee of the entire interest under 37 C.F.R 3.71 who has properly intervened.

All future communications from the Office will continue to be directed to the above-listed address until otherwise notified by applicant.

Telephone inquiries concerning this decision should be directed to Tredelle Jackson at 571-272- 2783.

/Tredelle D. Jackson/
Paralegal Specialist
Office of Petitions

cc: **GEARLD J. SANDERS**
FEMSUITE LLC
19991 TH STREET EAST
SONOMA CA 95476

UNITED STATES PATENT AND TRADEMARK OFFICE

Commissioner for Patents
United States Patent and Trademark Office
P.O. Box 1450
Alexandria, VA 22313-1450
www.uspto.gov

MEYERTONS HOOD KIVLIN KOWERT & GOETZEL PC
700 LAVACA SUITE 800
AUSTIN TX 78701

COPY MAILED
NOV 3 0 2006
OFFICE OF PETITIONS

In re Application of :
Von Kaenel, et al. :
Application No. 11/493,104 : ON PETITION
Filed: July 26, 2006 :
Attorney Docket No. 5888-04301 :

This is a decision on the "PETITION FOR CORRECTION OF FILING DATE UNDER 37 C.F.R. § 1.17(h)", filed October 2, 2006, to accord the above-identified application a filing date of July 26, 2006.

The petition is **GRANTED**.

Petitioner argues that the above-identified application was filed on July 26, 2006, not July 25, 2006. In support thereof, petitioner has included a copy of the Express Mail mailing label for Express mail number EV 325432760 US. The Express Mail mailing label contains a "date in" entry of July 26, 2006.

37 CFR 1.10(c) states that any person filing correspondence under 37 CFR 1.10, who can show that there is a discrepancy between the filing date accorded by the Office and the date of deposit as shown by the "date-in" on the Express Mail mailing label may petition the Commissioner to accord the correspondence a filing date as of the "date-in" on the Express Mail mailing label, provided:

(1) The petition is filed promptly after the person becomes aware that the Office has accorded, or will accord, a filing date based upon an incorrect entry by the USPS;

(2) The number of the "Express Mail" mailing label was placed on the paper(s)or fee(s) that constitute the correspondence prior to the original mailing by "Express Mail"; and

(3) The petition includes a true copy of the "Express Mail" mailing label showing the "date-in", and of any other official notation by the USPS relied upon to show the date of deposit.

Petitioner has fulfilled requirements (1), (2), and (3) above. The Express Mail mailing label bears a "date-in" entry of July 26, 2006.

Given the basis for granting this petition, no petition fee was required, and none has been charged.

The application file is being forwarded to the Office of Initial Patent Examination for further processing with a filing date of **July 26, 2006, not July 25, 2006.**

Telephone inquiries concerning this decision should be directed to the undersigned at (571)272-3207.

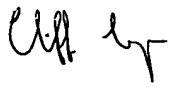

Cliff Congo
Petitions Attorney
Office of Petitions

UNITED STATES PATENT AND TRADEMARK OFFICE

UNITED STATES DEPARTMENT OF COMMERCE
United States Patent and Trademark Office
Address: COMMISSIONER FOR PATENTS
P.O. Box 1450
Alexandria, Virginia 22313-1450
www.uspto.gov

SCHWEGMAN, LUNDBERG & WOESSNER, P.A.
P.O. BOX 2938
MINNEAPOLIS, MN 55402

Mail Date: 04/20/2010

Applicant	: Leonard Forbes	: DECISION ON REQUEST FOR
Patent Number	: 7586329	: RECALCULATION of PATENT
Issue Date	: 09/08/2009	: TERM ADJUSTMENT IN VIEW
Appliction No	: 11/493,113	: OF WYETH AND NOTICE OF INTENT TO
Filed	: 07/26/2006	: ISSUE CERTIFICATE OF CORRECTION
		:

The Request for Recalculation is **GRANTED** to the extent indicated.

The patent term adjustment has been determined to be **174** days. The USPTO will *sua sponte* issue a certificate of correction reflecting the amount of PTA days determined by the recalculation.

Prior to the issuance of the certificate of correction, the USPTO will afford patentee an opportunity to be heard and request reconsideration. Accordingly, patentee has **one month or thirty (30) days**, whichever is longer, to file a request for reconsideration of this patent term adjustment calculation. See 35 U.S.C. 154(b)(3)(B)(ii) and 37 CFR 1.322(a)(4). No extensions of time will be granted under 37 CFR 1.136.

Patentee should use document code PET.OP if electronically filing a request for reconsideration of this patent term adjustment calculation. The patentee must also include the information required by 37 CFR 1.705(b)(2) and the fee required by 37 CFR 1.18(e). If patentee does not file a timely request for reconsideration of this patent term adjustment calculation including the information required by 37 CFR 1.705(b)(2) and the fee required by 37 CFR 1.18(e), the USPTO will issue a certificate of correction reflecting the PTA determination noted above.

Patentee should be aware that in order to preserve the right to review in the United States District Court for the District of Columbia of the USPTO patent term adjustment determination, patentee must ensure that he or she also take the steps required under 35 U.S.C. 154(b)(4)(A) in a timely manner. Nothing in the request for recalculation should be construed as providing an alternative time frame for commencing a civil action under 35 U.S.C. 154(b)(4)(A).

Any questions concerning this decision should be directed to the Office of Patent Legal Administration at 571-272-7702.

UNITED STATES PATENT AND TRADEMARK OFFICE

Commissioner for Patents
United States Patent and Trademark Office
P.O. Box 1450
Alexandria, VA 22313-1450
www.uspto.gov

PAUL V. KELLER, LLC
4585 LIBERTY RD.
SOUTH EUCLID OH 44121

COPY MAILED
NOV 16 2006
OFFICE OF PETITIONS

In re Application of :
Yan :
Application No. 11/493,119 : DECISION ON PETITION
Filed: July 26, 2006 : TO MAKE SPECIAL UNDER
Attorney Docket No. 05-ERC-349 : 37 CFR 1.102(c)(2)
:

This is a decision on the petition under 37 CFR 1.102(c)(2)(i), filed July 26, 2006, to make the above-identified application special based on the invention materially enhancing the quality of the environment as set forth in M.P.E.P. § 708.02, Section V.

The petition is **DISMISSED**.

A grantable petition to make an application special under 37 CFR 1.102(c)(2)(i) and MPEP § 708.02, Section V: Environmental Quality, must state that special status is sought because the invention materially enhances the quality of the environment by contributing to the restoration or maintenance of basic life-sustaining natural elements. If the disclosure is not clear on its face that the claimed invention materially enhances the quality of the environment by contributing to the restoration or maintenance of one of the basic life-sustaining natural elements, the petition must be accompanied by a statement by the applicant, assignee, or an attorney/agent registered to practice before the Office explaining how the materiality standard is met. No fee is required.

Petitioner's submission fails to meet the criteria set out with respect to materially enhancing the quality of the environment by contributing to the restoration or maintenance of basic life-sustaining natural elements, as set forth in M.P.E.P. § 708.02, Section V. The specification and claims as originally filed indicate the invention is directed to a pollution control device for diesel engines. However, the instant petition fails to meet the materiality standard of 37 CFR 1.102(c)(2). Although the instant invention may be directed to reduction of diesel emissions, the materiality standard of the rule has not been met, i.e. the petitioner has failed to explain how the claimed invention contributes in a significant, substantial, or noticeable manner to the maintenance of the basic life-sustaining natural elements. That the invention may reduce diesel emissions to a satisfactory extent in the sense of meeting EPA regulations effective in 2010, as stated, does not in itself meet the materiality standard. As a result, no contribution to the restoration or maintenance of basic life-sustaining natural elements has been persuasively shown.

Further correspondence with respect to this matter should be addressed as follows:

By Mail: Mail Stop PETITION
Commissioner for Patents

P. O. Box 1450
Alexandria, VA 22313-1450

By hand: U. S. Patent and Trademark Office
Customer Service Window, Mail Stop Petitions
Randolph Building
401 Dulany Street
Alexandria, VA 22314

By FAX: (571) 273-8300

Telephone inquiries concerning this decision should be directed to Ramesh Krishnamurthy at 571-272-4914, or to the undersigned at 571-272-7099.

All other inquiries concerning either the examination or status of the application should be directed to the Technology Center.

The application is being forwarded to the Technology Center Art Unit 3748 for action in its regular turn.

David Bucci
Petitions Examiner
Office of Petitions

UNITED STATES PATENT AND TRADEMARK OFFICE

Commissioner for Patents
United States Patent and Trademark Office
P.O. Box 1450
Alexandria, VA 22313-1450
www.uspto.gov

COPY MAILED
NOV 16 2006
OFFICE OF PETITIONS

PAUL V. KELLER, LLC
4585 LIBERTY RD.
SOUTH EUCLID OH 44121

In re Application of :
Yan :
Application No. 11/493,120 : DECISION ON PETITION
Filed: July 26, 2006 : TO MAKE SPECIAL UNDER
Attorney Docket No. 05-ERC-243 : 37 CFR 1.102(c)(2)
:

This is a decision on the petition under 37 CFR 1.102(c)(2)(i), filed July 26, 2006, to make the above-identified application special based on the invention materially enhancing the quality of the environment as set forth in M.P.E.P. § 708.02, Section V.

The petition is **DISMISSED**.

A grantable petition to make an application special under 37 CFR 1.102(c)(2)(i) and MPEP § 708.02, Section V: Environmental Quality, must state that special status is sought because the invention materially enhances the quality of the environment by contributing to the restoration or maintenance of basic life-sustaining natural elements. If the disclosure is not clear on its face that the claimed invention materially enhances the quality of the environment by contributing to the restoration or maintenance of one of the basic life-sustaining natural elements, the petition must be accompanied by a statement by the applicant, assignee, or an attorney/agent registered to practice before the Office explaining how the materiality standard is met. No fee is required.

Petitioner's submission fails to meet the criteria set out with respect to materially enhancing the quality of the environment by contributing to the restoration or maintenance of basic life-sustaining natural elements, as set forth in M.P.E.P. § 708.02, Section V. The specification and claims as originally filed indicate the invention is directed to a pollution control device for diesel engines. However, the instant petition fails to meet the materiality standard of 37 CFR 1.102(c)(2). Although the instant invention may be directed to reduction of diesel emissions, the materiality standard of the rule has not been met, i.e. the petitioner has failed to explain how the claimed invention contributes in a significant, substantial, or noticeable manner to the maintenance of the basic life-sustaining natural elements. That the invention may reduce diesel emissions to a satisfactory extent in the sense of meeting EPA regulations effective in 2010, as stated, does not in itself meet the materiality standard. As a result, no contribution to the restoration or maintenance of basic life-sustaining natural elements has been persuasively shown.

Further correspondence with respect to this matter should be addressed as follows:

By Mail: Mail Stop PETITION
Commissioner for Patents

P. O. Box 1450
Alexandria, VA 22313-1450

By hand: U. S. Patent and Trademark Office
Customer Service Window, Mail Stop Petitions
Randolph Building
401 Dulany Street
Alexandria, VA 22314

By FAX: (571) 273-8300

Telephone inquiries concerning this decision should be directed to Ramesh Krishnamurthy at 571-272-4914, or to the undersigned at 571-272-7099.

All other inquiries concerning either the examination or status of the application should be directed to the Technology Center.

The application is being forwarded to the Technology Center Art Unit 3748 for action in its regular turn.

/David Bucci/
Petitions Examiner
Office of Petitions

UNITED STATES PATENT AND TRADEMARK OFFICE

COMMISSIONER FOR PATENTS
UNITED STATES PATENT AND TRADEMARK OFFICE
P.O. BOX 1450
ALEXANDRIA, VA 22313-1450
www.uspto.gov

Michael Cameron
2025 Savannah Drive
McKinney, TX 75070

COPY MAILED

APR 03 2008

OFFICE OF PETITIONS

In re Application of	:	
Donnie R. Bridgefarmer	:	
Application No. 11/493,136	:	DECISION ON PETITION
Filed: July 27, 2006	:	TO WITHDRAW
Attorney Docket No. DBRI.0001	:	FROM RECORD
	:	

This is a decision on the Requests to Withdraw as attorney or agent of record under 37 C.F.R. § 1.36(b), filed March 3, 2008.

The request is **NOT APPROVED**.

A grantable request to withdraw as attorney/agent of record must be signed by every attorney/agent seeking to withdraw or contain a clear indication that one attorney is signing on behalf of another/others. A request to withdraw will not be approved unless at least 30 (thirty) days would remain between the date of approval and the later of the expiration date of a time to file a response or the expiration date of the maximum time period which can be extended under 37 C.F.R. § 1.136(a).

The Office cannot approve the request at this time since the reasons provided do not meet any of the conditions under the mandatory or permissive categories enumerated in 37 CFR 10.40. Section 10.40 of Title 37 of the Code of Federal Regulation states, "[a] practitioner shall not withdraw from employment in a proceeding before the Office without permission from the Office[.]" More specifically, 37 CFR 10.40 states, "[i]f paragraph (b) of this section is not applicable, a practitioner may not request permission to withdraw in matter pending before the Office unless such request or such withdrawal is" for one the permissive reasons listed in 37 CFR 10.40(c). The reason set forth in the request, "firm closed at address in POA ," does not meet any of the conditions set forth in 37 CFR 10.40.

A courtesy copy of this decision is being mailed to applicant.

All future communications from the Office will continue to be directed to the above-listed address until otherwise notified by applicant.

A non-final rejection was mailed on March 28, 2008. Failure to timely respond will result in the abandonment of this application.

Telephone inquiries concerning this decision should be directed to Kimberly Inabinet at 571-272- 4618.

Kimberly Inabinet
Petitions Examiner
Office of Petitions

cc: Donnie Bridgefarmer
P.O. Box 2994
McKinney, TX 75070

UNITED STATES PATENT AND TRADEMARK OFFICE

Commissioner for Patents
United States Patent and Trademark Office
P.O. Box 1450
Alexandria, VA 22313-1450
www.uspto.gov

SLATER & MATSIL, L.L.P.
17950 PRESTON ROAD, SUITE 1000
DALLAS TX 75252

COPY MAILED

SEP 02 2008

In re Application of :
Yu, et al. :
Application No. 11/493,144 : DECISION
Filed: 26 July, 2006 :
Attorney Docket No. TSM05-0774 :

This is a decision on the petitions filed on 29 July, 2008, supplemented on 31 July, 2008, considered as a petition under 37 C.F.R. §1.181 (no fee) requesting withdrawal of the holding of abandonment in the above-identified application, and previously filed on 16 January, 2008, seeking to revive the application under 37 C.F.R. §1.137(a) as having been abandoned due to unavoidable delay.

The Office regrets the delay in addressing this matter, however, the instant petition was presented to the attorneys in the Office of Petitions only at this writing.

The petition under 37 C.F.R. §1.181 is **GRANTED**; the petition under 37 C.F.R. §1.137(a) is **DISMISSED**.

As to the Request to Withdraw
the Holding of Abandonment

A proper showing (for relief under 37 C.F.R. §1.181):

- (as to non-receipt) requires at the very minimum: a statement from practitioner stating that the Office action was not received by the practitioner; a statement from the practitioner attesting to the fact that a search of the file jacket and docket records for the application indicates that the Office action was not received with a copy of those docket records; and a brief statement of the calendaring process and a copy of the due-date (calendar) docket record(s) where the nonreceived Office action would have been

scheduled for reply had it been received must be attached to and referenced in the practitioner's statement; alternatively,

- (for a showing of timely and proper reply) requires a statement from practitioner stating that the reply was timely submitted by the practitioner; and copies of all papers submitted as and/or in support of that reply, with/and a copy of the date-stamped receipt card, Office FAX receipt acknowledgement (not simply Petitioner's FAX transmittal), or EFS receipt acknowledgment from the Office, along with practitioner's attestation as to the correctness/completeness of his/her records.

The showing(s) must include that of the person(s) with first-hand knowledge and an acknowledgment by the Petitioner that he/she has reviewed that information in compliance with his/her duty of candor to the Office.

As to Allegations of
Unavoidable Delay

The requirements of a grantable petition pursuant to 37 C.F.R. §1.137(a) are the petition and fee therefor, a reply, a proper showing of unavoidable delay under the regulation, and, where applicable, a terminal disclaimer and fee. (However, it does not appear that a terminal disclaimer and fee are due here.)

BACKGROUND

The record reflects as follows:

Petitioner failed to reply to the non-final Office action mailed on 13 June, 2007, with reply due absent extension of time on or before 13 September, 2007.

The application went abandoned by operation of law after midnight 13 September, 2007.

The Office mailed the Notice of Abandonment on 27 December, 2007.

On 16 January, 2008, Petitioner filed a petition with fee under 37 C.F.R. §1.137(a) averring abandonment due to unavoidable delay, however, Petitioner averred therein non-receipt of the Office action in question, and Petitioner sought to make a showing of unavoidable delay, and included therewith a reply in the form of an amendment.

On 29 July, 2008, Petitioner filed a petition under 37 C.F.R. §1.181 seeking withdrawal of the holding of abandonment and included therewith copies of what were averred to be the docket sheet of the application and the due date calendar, both in support of the averment that the Office action in question had not been received, an on or about 31 July, 2008, Petitioner supplemented

that showing with his statement as to, *inter alia*, search of the file with the result that the Office action in question was not found in/amongst his office records.

The guidance in the Commentary at MPEP §711.03(c) sets forth the showing requirements for overcoming the presumptions herein.[1]

---

[1] The guidance in the Commentary at MPEP §711.03(c) as to non-received Office actions and timely filed replies is as follows:

A. Petition To Withdraw Holding of Abandonment Based on Failure To Receive Office Action

In *Delgar v. Schulyer*, 172 USPQ 513 (D.D.C. 1971), the court decided that the Office should mail a new Notice of Allowance in view of the evidence presented in support of the contention that the applicant's representative did not receive the original Notice of Allowance. Under the reasoning of *Delgar*, an allegation that an Office action was never received may be considered in a petition to withdraw the holding of abandonment. If adequately supported, the Office may grant the petition to withdraw the holding of abandonment and remail the Office action. That is, the reasoning of *Delgar* is applicable regardless of whether an application is held abandoned for failure to timely pay the issue fee (35 U.S.C. 151) or for failure to prosecute (35 U.S.C. 133).

To minimize costs and burdens to practitioners and the Office, the Office has modified the showing required to establish nonreceipt of an Office action. The showing required to establish nonreceipt of an Office communication must include a statement from the practitioner **>describing the system used for recording an Office action received at the correspondence address of record with the USPTO. The statement should establish that the docketing system is sufficiently reliable. It is expected that the record would include, but not be limited to, the application number, attorney docket number, the mail date of the Office action and the due date for the response.

Practitioner must state that the Office action was not received at the correspondence address of record, and that a search of the practitioner's record(s), including any file jacket or the equivalent, and the application contents, indicates that the Office action was not received. A copy of the record(s) used by the practitioner where the non-received Office action would have been entered had it been received is required.

A copy of the practitioner's record(s) required to show non-receipt of the Office action should include the master docket for the firm. That is, if a three month period for reply was set in the nonreceived Office action, a copy of the master docket report showing all replies docketed for a date three months from the mail date of the nonreceived Office action must be submitted as documentary proof of nonreceipt of the Office action. If no such master docket exists, the practitioner should so state and provide other evidence such as, but not limited to, the following: the application file jacket; incoming mail log; calendar; reminder system; or the individual docket record for the application in question.<

The showing outlined above may not be sufficient if there are circumstances that point to a conclusion that the Office action may have been lost after receipt rather than a conclusion that the Office action was lost in the mail (e.g., if the practitioner has a history of not receiving Office actions).

Evidence of nonreceipt of an Office communication or action (e.g., Notice of Abandonment or an advisory action) other than that action to which reply was required to avoid abandonment would not warrant withdrawal of the holding of abandonment. Abandonment takes place by operation of law for failure to reply to an Office action or timely pay the issue fee, not by operation of the mailing of a Notice of Abandonment. See *Lorenz v. Finkl*, 333 F.2d 885, 889-90, 142 USPQ 26, 29-30 (CCPA 1964); *Krahn v. Commissioner*, 15 USPQ2d 1823, 1824 (E.D. Va 1990); *In re Application of Fischer*, 6 USPQ2d 1573, 1574 (Comm'r Pat. 1988).

B. Petition To Withdraw Holding of Abandonment Based on Evidence That a Reply Was Timely Mailed or Filed

37 CFR 1.10(c) through 1.10(e) and 1.10(g) set forth procedures for petitioning the Director of the USPTO to accord a filing date to correspondence as of the date of deposit of the correspondence as "Express Mail." A petition to withdraw the holding of abandonment relying upon a timely reply placed in "Express Mail" must include an appropriate petition under 37 CFR 1.10(c), (d), (e), or (g) (see MPEP § 513). When a paper is shown to have been mailed to the Office using the "Express Mail" procedures, the paper must be entered in PALM with the "Express Mail" date.

Similarly, applicants may establish that a reply was filed with a postcard receipt that properly identifies the reply and provides *prima facie* evidence that the reply was timely filed. See MPEP § 503. For example, if the application has been held abandoned for failure to file a reply to a first Office action, and applicant has a postcard receipt showing that an amendment was timely filed in response to the Office action, then the holding of abandonment should be withdrawn upon the filing of a petition to withdraw the holding of abandonment. When the reply is shown to have been timely filed based on a postcard receipt, the reply must be entered into PALM using the date of receipt of the reply as shown on the post card receipt.

Where a certificate of mailing under 37 CFR 1.8, but not a postcard receipt, is relied upon in a petition to withdraw the holding of abandonment, see 37 CFR 1.8(b) and MPEP § 512. As stated in 37 CFR 1.8(b)(3) the statement that attests to the previous timely mailing or transmission of the correspondence must be on a personal knowledge basis, or to the satisfaction of the Director of the USPTO. If the statement attesting to the previous timely mailing is not made by the person who signed the Certificate of Mailing (i.e., there is no personal knowledge basis), then the statement attesting to the previous timely mailing should include evidence that supports the conclusion that the correspondence was actually mailed (e.g., copies of a mailing log establishing that correspondence was mailed for that application). When the correspondence is shown to have been timely filed based on a certificate of mailing, the correspondence is entered into PALM with the actual date of receipt (i.e., the date that the duplicate copy of the papers was filed with the statement under 37 CFR 1.8).

37 CFR 1.8(b) also permits applicant to notify the Office of a previous mailing or transmission of correspondence and submit a statement under 37 CFR 1.8(b)(3) accompanied by a duplicate copy of the correspondence when a reasonable amount of time (e.g., more than one month) has elapsed from the time of mailing or transmitting of the correspondence. Applicant does not have to wait until the application becomes abandoned before notifying the Office of the previous mailing or transmission of the correspondence. Applicant should check the private Patent Application Information Retrieval (PAIR) system for the status of the correspondence before notifying the Office. See MPEP § 512.

Out of an abundance of caution, Petitioners always are reminded that the filing of a petition under 37 C.F.R. §1.181 does not toll any periods that may be running any action by the Office and a petition seeking relief under the regulation must be filed within two (2) months of the act complained of (see: 37 C.F.R. §1.181(f)), and that those registered to practice and all others who make representations before the Office are reminded to inquire into the underlying facts of representations made to the Office and support averments with the appropriate documentation– since all owe to the Office the continuing duty to disclose.[2]

The availability of applications and application papers online to applicants/practitioners who diligently associate their Customer Number with the respective application(s) now provides an applicant/practitioner on-demand information as to events/transactions in an application.

The statutes, the rules of practice and the guidance set forth in the Commentary of the Manual of Patent Examining Procedure (MPEP) provide many avenues for action and methods of protection for applicants, patentees, assignees, practitioners and others to accomplish tasks before the Office. (*See*, for example: MPEP §711.03(c).) However, persons who fail to utilize those statutes and rules fail to succeed in their tasks or obtain those protections.

(*See*: MPEP § 711.03(c) under subheading "Petition to Withdraw Holding of Abandonment Based on Failure to Receive Office Action," alternatively "A Reply Was Timely Filed"; see also: "Withdrawing the Holding of Abandonment When Office Actions Are Not Received," 1156 Official Gazette 53 (November 16, 1993).)

Time for Prosecution

As those registered to practice before the Office, then-Petitioner and Petitioner are aware that the statutory period for timely, proper reply—i.e., the maximum allowable time for a proper reply—is six (6) months.

Specifically, Congress has provided (in pertinent part):

C. Treatment of Untimely Petition To Withdraw Holding of Abandonment

37 CFR 1.181(f) provides that, *inter alia*, except as otherwise provided, any petition not filed within 2 months from the action complained of may be dismissed as untimely. Therefore, any petition (under 37 CFR 1.181) to withdraw the holding of abandonment not filed within 2 months of the mail date of a notice of abandonment (the action complained of) may be dismissed as untimely. 37 CFR 1.181(f).

Rather than dismiss an untimely petition to withdraw the holding of abandonment under 37 CFR 1.181(f), the Office may require a terminal disclaimer as a condition of granting an untimely petition to withdraw the holding of abandonment.

[2] See supplement of 17 June, 1999. The Patent and Trademark Office is relying on Petitioner's duty of candor and good faith and accepting a statement made by Petitioner. See Changes to Patent Practice and Procedure, 62 Fed. Reg. at 53160 and 53178, 1203 Off. Gaz. Pat. Office at 88 and 103 (responses to comments 64 and 109)(applicant obligated under 37 C.F.R. §10.18 to inquire into the underlying facts and circumstances when providing statements to the Patent and Trademark Office).

35 U.S.C. §133. Time for prosecution.

Upon failure of the applicant to prosecute the application within six months after any action therein, of which notice has been given or mailed to the applicant, or within such shorter time, not less than thirty days, as fixed by the Director in such action, the application shall be regarded as abandoned by the parties thereto ***." (Emphasis supplied.)

Allegations as to the Request to
Withdraw the Holding of Abandonment

The courts have determined the construct for properly supporting a petition seeking withdrawal of a holding of abandonment.[3] (See, also, the commentary at MPEP §711.03(c)(I)(A) and (B).) And the regulation requires that relief be sought within two (2) months of the act complained of.

Petitioner appears to have satisfied the showing required and though he did not plead specifically and from the outset a specific request to withdraw the holding of abandonment, the petition was filed within three (3) weeks of the Notice of Abandonment and Petitioner expressly averred therein non-receipt of the Office action in question.

As to Allegations of
Unavoidable Delay

In light of the showing under 37 C.F.R. §1.181, the petition under 37 C.F.R. §1.137(a) appears to be moot.

CONCLUSION

Accordingly, The petition under:

- 37 C.F.R. §1.181 is **granted** and the 27 December, 2007, Notice of Abandonment is **vacated**;
- 37 C.F.R. §1.137(a) is **dismissed as moot**, and fees previously charged are refunded to Deposit Account 50-1065—should Petitioner's review later reveal find that these fees have not been refunded, Petitioner should submit to the Office of Finance a refund request with a copy of this decision.

[3] See: Delgar v. Schulyer, 172 USPQ 513 (D.D.C. 1971).

The instant application is released to Technology Center/AU 3723 for further processing in due course.

Petitioner may find it beneficial to view Private PAIR within a fortnight of the instant decision to ensure that the revival has been acknowledged by the Technology Center/AU in response to this decision—and it is noted that all inquiries with regard to that change in status should be directed to the Technology Center/AU where that change of status must be effected.

While telephone inquiries regarding this decision may be directed to the undersigned at (571) 272-3214, it is noted that all practice before the Office is in writing (see: 37 C.F.R. §1.2[4]) and the proper authority for action on any matter in this regard are the statutes (35 U.S.C.), regulations (37 C.F.R.) and the commentary on policy (MPEP). Therefore, no telephone discussion may be controlling or considered authority for Petitioner's action(s).

/John J. Gillon, Jr./
John J. Gillon, Jr.
Senior Attorney
Office of Petitions

[4] The regulations at 37 C.F.R. §1.2 provide:

§1.2 Business to be transacted in writing.

All business with the Patent and Trademark Office should be transacted in writing. The personal attendance of applicants or their attorneys or agents at the Patent and Trademark Office is unnecessary. The action of the Patent and Trademark Office will be based exclusively on the written record in the Office. No attention will be paid to any alleged oral promise, stipulation, or understanding in relation to which there is disagreement or doubt.

UNITED STATES PATENT AND TRADEMARK OFFICE

Commissioner for Patents
United States Patent and Trademark Office
P.O. Box 1450
Alexandria, VA 22313-1450
www.uspto.gov

HUGH M. LYMAN, JR.
27639 SE 401ST STREET
ENUMCLAW WA 98022

COPY MAILED

OCT 24 2006

OFFICE OF PETITIONS

In re Application of :
LYMAN :
Application No. 11/493,147 : DECISION ON PETITION
Filed: July 27, 2006 : TO MAKE SPECIAL UNDER
Attorney Docket No. : 37 CFR 1.102(c)(1)
:

This is a decision on the petition under 37 CFR 1.102(c)(1), filed July 27, 2006, to make the above-identified application special based on applicant's age as set forth in M.P.E.P. § 708.02, Section IV.

The petition is **GRANTED**.

A grantable petition to make an application special under 37 CFR 1.102(c)(1) and MPEP § 708.02, Section IV: Applicant's Age, must be accompanied by evidence showing that at least one of the applicants is 65 years of age, or more, such as a birth certificate or a statement by applicant. No fee is required.

The instant petition includes a copy of a birth certificate for Mr. Lyman indicating that he is at least 65 years of age. Accordingly, the above-identified application has been accorded "special" status.

Telephone inquiries concerning this decision should be directed to Patricia Volpe at 571-272-6825.

All other inquiries concerning either the examination or status of the application should be directed to the Technology Center.

The application is being forwarded to the Technology Center Art Unit 1734 for action on the merits commensurate with this decision.

David Bucci
Petitions Examiner
Office of Petitions

UNITED STATES PATENT AND TRADEMARK OFFICE

UNITED STATES DEPARTMENT OF COMMERCE
United States Patent and Trademark Office
Address: COMMISSIONER FOR PATENTS
P.O. Box 1450
Alexandria, Virginia 22313-1450
www.uspto.gov

APPL NO.	FILING OR 371 (c) DATE	ART UNIT	FIL FEE REC'D	ATTY.DOCKET NO	DRAWINGS	TOT CLMS	IND CLMS
11/493,167	07/25/2006	2155	1000	5693P283	9	20	3

CONFIRMATION NO. 8019

48102
NETWORK APPLIANCE/BLAKELY
12400 WILSHIRE BLVD
SEVENTH FLOOR
LOS ANGELES, CA 90025-1030

CORRECTED FILING RECEIPT

OC000000021146522

Date Mailed: 11/07/2006

Receipt is acknowledged of this regular Patent Application. It will be considered in its order and you will be notified as to the results of the examination. Be sure to provide the U.S. APPLICATION NUMBER, FILING DATE, NAME OF APPLICANT, and TITLE OF INVENTION when inquiring about this application. Fees transmitted by check or draft are subject to collection. Please verify the accuracy of the data presented on this receipt. **If an error is noted on this Filing Receipt, please mail to the Commissioner for Patents P.O. Box 1450 Alexandria Va 22313-1450. Please provide a copy of this Filing Receipt with the changes noted thereon. If you received a "Notice to File Missing Parts" for this application, please submit any corrections to this Filing Receipt with your reply to the Notice. When the USPTO processes the reply to the Notice, the USPTO will generate another Filing Receipt incorporating the requested corrections (if appropriate).**

Applicant(s)

Raja Shekar CS, Bangalore, INDIA;
Armeet Deulgaonkar, Bangalore, INDIA;
Ravindra Kumer, Bangalore, INDIA;
Anurag Palsule, Bangalore, INDIA;

Assignment For Published Patent Application

Network Appliance, Inc.

Power of Attorney: The patent practitioners associated with Customer Number **48102**.

Domestic Priority data as claimed by applicant

Foreign Applications

If Required, Foreign Filing License Granted: 08/11/2006

The country code and number of your priority application, to be used for filing abroad under the Paris Convention, is US11/493,167

Projected Publication Date: Request for Non-Publication Acknowledged

Non-Publication Request: Yes

Early Publication Request: No

Title

System and method for server configuration control and management

Preliminary Class

709

PROTECTING YOUR INVENTION OUTSIDE THE UNITED STATES

Since the rights granted by a U.S. patent extend only throughout the territory of the United States and have no effect in a foreign country, an inventor who wishes patent protection in another country must apply for a patent in a specific country or in regional patent offices. Applicants may wish to consider the filing of an international application under the Patent Cooperation Treaty (PCT). An international (PCT) application generally has the same effect as a regular national patent application in each PCT-member country. The PCT process **simplifies** the filing of patent applications on the same invention in member countries, but **does not result** in a grant of "an international patent" and does not eliminate the need of applicants to file additional documents and fees in countries where patent protection is desired.

Almost every country has its own patent law, and a person desiring a patent in a particular country must make an application for patent in that country in accordance with its particular laws. Since the laws of many countries differ in various respects from the patent law of the United States, applicants are advised to seek guidance from specific foreign countries to ensure that patent rights are not lost prematurely.

Applicants also are advised that in the case of inventions made in the United States, the Director of the USPTO must issue a license before applicants can apply for a patent in a foreign country. The filing of a U.S. patent application serves as a request for a foreign filing license. The application's filing receipt contains further information and guidance as to the status of applicant's license for foreign filing.

Applicants may wish to consult the USPTO booklet, "General Information Concerning Patents" (specifically, the section entitled "Treaties and Foreign Patents") for more information on timeframes and deadlines for filing foreign patent applications. The guide is available either by contacting the USPTO Contact Center at 800-786-9199, or it can be viewed on the USPTO website at http://www.uspto.gov/web/offices/pac/doc/general/index.html.

For information on preventing theft of your intellectual property (patents, trademarks and copyrights), you may wish to consult the U.S. Government website, http://www.stopfakes.gov. Part of a Department of Commerce initiative, this website includes self-help "toolkits" giving innovators guidance on how to protect intellectual property in specific countries such as China, Korea and Mexico. For questions regarding patent enforcement issues, applicants may call the U.S. Government hotline at 1-866-999-HALT (1-866-999-4158).

LICENSE FOR FOREIGN FILING UNDER
Title 35, United States Code, Section 184
Title 37, Code of Federal Regulations, 5.11 & 5.15

GRANTED

The applicant has been granted a license under 35 U.S.C. 184, if the phrase "IF REQUIRED, FOREIGN FILING LICENSE GRANTED" followed by a date appears on this form. Such licenses are issued in all applications where the conditions for issuance of a license have been met, regardless of whether or not a license may be required as set forth in 37 CFR 5.15. The scope and limitations of this license are set forth in 37 CFR 5.15(a) unless an earlier license has been issued under 37 CFR 5.15(b). The license is subject to revocation upon written notification. The date indicated is the effective date of the license, unless an earlier license of similar scope has been granted

under 37 CFR 5.13 or 5.14.

This license is to be retained by the licensee and may be used at any time on or after the effective date thereof unless it is revoked. This license is automatically transferred to any related applications(s) filed under 37 CFR 1.53(d). This license is not retroactive.

The grant of a license does not in any way lessen the responsibility of a licensee for the security of the subject matter as imposed by any Government contract or the provisions of existing laws relating to espionage and the national security or the export of technical data. Licensees should apprise themselves of current regulations especially with respect to certain countries, of other agencies, particularly the Office of Defense Trade Controls, Department of State (with respect to Arms, Munitions and Implements of War (22 CFR 121-128)); the Bureau of Industry and Security, Department of Commerce (15 CFR parts 730-774); the Office of Foreign Assets Control, Department of Treasury (31 CFR Parts 500+) and the Department of Energy.

NOT GRANTED

No license under 35 U.S.C. 184 has been granted at this time, if the phrase "IF REQUIRED, FOREIGN FILING LICENSE GRANTED" DOES NOT appear on this form. Applicant may still petition for a license under 37 CFR 5.12, if a license is desired before the expiration of 6 months from the filing date of the application. If 6 months has lapsed from the filing date of this application and the licensee has not received any indication of a secrecy order under 35 U.S.C. 181, the licensee may foreign file the application pursuant to 37 CFR 5.15(b).

UNITED STATES PATENT AND TRADEMARK OFFICE

Commissioner for Patents
United States Patent and Trademark Office
P.O. Box 1450
Alexandria, VA 22313-1450
www.uspto.gov

THE FARRELL LAW FIRM, LLP
290 BROADHOLLOW ROAD
SUITE 210E
MELVILLE, NY 11747

MAILED

MAY 19 2009

OFFICE OF PETITIONS

In re Application of :
Annaniy Berenshteyn :
Application No. 11/493,175 : ON PETITION
Filed: July 27, 2006 :
Attorney Docket No. 2064-2 :

This is a decision on the petition under 37 CFR 1.137(b), filed April 17, 2009, to revive the above-identified application.

The application became abandoned for failure to file a reply to the Notice Requiring Excess Claims Fees mailed March 7, 2008. A Notice of Abandonment was mailed on October 2, 2008.

The Power of Attorney or Revocation of Power of Attorney with a New Power of Attorney and Change of Correspondence Address filed on April 17, 2009 has been accepted. However, it is not apparent whether the statement of unintentional delay was signed by a person who would have been in a position of knowing that the entire delay in filing the required reply from the due date for the reply until the filing of a grantable petition pursuant to 37 CFR 1.137(b) was unintentional. Nevertheless, in accordance with 37 CFR 10.18, the statement is accepted as constituting a certification of unintentional delay. However, in the event that petitioner has no knowledge that the delay was unintentional, petitioner must make such an inquiry to ascertain that, in fact, the delay was unintentional. If petitioner discovers that the delay was intentional, petitioner must so notify the Office.

The petition satisfies the requirements of 37 CFR 1.137(b) in that petitioner has supplied (1) the reply in the form of $110 in claim fees; (2) the petition fee of $810; and (3) a proper statement of unintentional delay. Therefore, the petition is **GRANTED**.

This application file is being referred to Technology Center Art Unit 3764 for appropriate action by the Examiner in the normal course of business on the response filed with the present petition.

Telephone inquiries concerning this decision should be directed to the undersigned at (571) 272-3226.

Andrea Smith
Petitions Examiner
Office of Petitions

Enclosure: Notice of Acceptance of Power of Attorney

UNITED STATES PATENT AND TRADEMARK OFFICE

UNITED STATES DEPARTMENT OF COMMERCE
United States Patent and Trademark Office
Address: COMMISSIONER FOR PATENTS
P.O. Box 1450
Alexandria, Virginia 22313-1450
www.uspto.gov

APPLICATION NUMBER	FILING OR 371(C) DATE	FIRST NAMED APPLICANT	ATTY. DOCKET NO./TITLE
11/493,175	07/27/2006	Annaniy Berenshteyn	2064-2

CONFIRMATION NO. 8056

66547
THE FARRELL LAW FIRM, LLP
290 Broadhollow Road
Suite 210E
Melville, NY 11747

POA ACCEPTANCE LETTER

OC000000036041588

Date Mailed: 05/19/2009

NOTICE OF ACCEPTANCE OF POWER OF ATTORNEY

This is in response to the Power of Attorney filed 04/17/2009.

The Power of Attorney in this application is accepted. Correspondence in this application will be mailed to the above address as provided by 37 CFR 1.33.

/amsmith/

Office of Data Management, Application Assistance Unit (571) 272-4000, or (571) 272-4200, or 1-888-786-0101

UNITED STATES PATENT AND TRADEMARK OFFICE

Commissioner for Patents
United States Patent and Trademark Office
P.O. Box 1450
Alexandria, VA 22313-1450
www.uspto.gov

DUGAN & DUGAN, PC
55 SOUTH BROADWAY
TARRYTOWN NY 10591

COPY MAILED

MAR 0 1 2007

OFFICE OF PETITIONS

In re Application of :
Tatsuya Sato et al :
Application No. 11/493,193 : DECISION ACCORDING STATUS
Filed: July 25, 2006 : UNDER 37 CFR 1.47(a)
Attorney Docket No. :
10249/C01/FEP/OTHER/AG :

This is in response to the communication received October 10, 2006, which is being treated as a request to accord 37 CFR 1.47(a) status to the above-identified application. The request is accompanied by a copy of a petition under 37 CFR 1.47 filed in parent Application No. 11/446,444.

The request is **granted**.

Where status under 37 CFR 1.47 is granted in a first application and the nonsigning inventor does not later join in the filing by executing an oath or declaration for the application, and another application (a child application) is later filed claiming the benefit of the filing date of the first application and using the declaration of the prior application, status under 37 CFR 1.47 continues to exist in the child application. Prior Application No. 11/446,444, of which the instant application claims priority benefits under 35 USC 120, was accorded 37 CFR 1.47 status in a decision on petition mailed on February 27, 2007.

37 CFR 1.63(d)(3) states:

> Where the executed oath or declaration of which a copy is submitted for a continuation or divisional application was originally filed in a prior application accorded status under § 1.47, the copy of the executed oath or declaration for such prior application must be accompanied by:
>
> (i) A copy of the decision granting a petition to accord § 1.47 status to the prior application, unless all inventors or legal representatives have filed an oath or declaration to join in an application accorded status under § 1.47 of which

the continuation or divisional application claims a benefit under 35 U.S.C. 120, 121, or 365(c).

The application papers were not accompanied by a copy of the decisions granting a petition under 37 CFR 1.47(a) in the prior application as no decision had as yet been rendered in parent Application No. 11/446,444. As a decision on the petition in the parent application was rendered on February 27, 2007, a copy of that decision has been placed of record in the present continuation application.

The above-identified application and papers are now in compliance with 37 CFR 1.47(a). This application is hereby accorded rule 1.47(a) status. As provided in 37 CFR 1.47(c), no notice of this application's filing will be forwarded to the nonsigning inventor nor will such notice be published in the Official Gazette since notice regarding the filing of the prior application will be given to the nonsigning inventor in the parent application.

Telephone inquiries regarding this decision should be directed to the undersigned at (571) 272-3218.

Karen Creasy

Karen Creasy
Petitions Examiner
Office of Petitions

UNITED STATES PATENT AND TRADEMARK OFFICE

Commissioner for Patents
United States Patent and Trademark Office
P.O. Box 1450
Alexandria, VA 22313-1450
www.uspto.gov

Patterson & Sheridan, L.L.P.
3040 Post Oak Boulevard
Suite 1500
Houston, TX 77056

MAILED

JUN 14 2010

OFFICE OF PETITIONS

In re Application of :
Jerome Couture-Gagnon :
Application No. 11/493,221 : DECISION ON PETITION
Filed: July 26, 2006 :
Attorney Docket No. AUTO/1177 :

This is a decision on the petition under the unintentional provisions of 37 CFR 1.137(b), filed March 10, 2010, to revive the above-identified application.

The petition is **GRANTED**.

This application became abandoned for failure to timely pay the issue and publication fee on or before March 9, 2010, as required by the Notice of Allowance and Fee(s) Due, mailed December 9, 2010. Accordingly, the date of abandonment of this application is March 10, 2010. A Notice of Abandonment was mailed on March 22, 2010.

The petition satisfies the requirements of 37 CFR 1.137(b) in that petitioner has supplied (1) the reply in the form of payment of the issue fee of $1,510.00 and the publication fee of $300.00, (2) the petition fee of $1,620.00; and (3) a proper statement of unintentional delay.

Telephone inquiries concerning this decision should be directed to Christina Tartera Donnell at (571) 272-3211.

This application is being referred to Office of Data Management for processing into a patent.

Christina Tartera Donnell

Christina Tartera Donnell
Senior Petitions Attorney
Office of Petitions

UNITED STATES PATENT AND TRADEMARK OFFICE

UNITED STATES DEPARTMENT OF COMMERCE
United States Patent and Trademark Office
Address: COMMISSIONER FOR PATENTS
P.O. Box 1450
Alexandria, Virginia 22313-1450
www.uspto.gov

SIDLEY AUSTIN LLP
717 NORTH HARWOOD
SUITE 3400
DALLAS, TX 75201

Mail Date: 04/20/2010

Applicant	: Junji Sato	: DECISION ON REQUEST FOR
Patent Number	: 7608979	: RECALCULATION of PATENT
Issue Date	: 10/27/2009	: TERM ADJUSTMENT IN VIEW
Appliction No	: 11/493,227	: OF WYETH AND NOTICE OF INTENT TO
Filed	: 07/26/2006	: ISSUE CERTIFICATE OF CORRECTION
		:

The Request for Recalculation is **GRANTED** to the extent indicated.

The patent term adjustment has been determined to be **505** days. The USPTO will *sua sponte* issue a certificate of correction reflecting the amount of PTA days determined by the recalculation.

Prior to the issuance of the certificate of correction, the USPTO will afford patentee an opportunity to be heard and request reconsideration. Accordingly, patentee has **one month or thirty (30) days**, whichever is longer, to file a request for reconsideration of this patent term adjustment calculation. See 35 U.S.C. 154(b)(3)(B)(ii) and 37 CFR 1.322(a)(4). No extensions of time will be granted under 37 CFR 1.136.

Patentee should use document code PET.OP if electronically filing a request for reconsideration of this patent term adjustment calculation. The patentee must also include the information required by 37 CFR 1.705(b)(2) and the fee required by 37 CFR 1.18(e). If patentee does not file a timely request for reconsideration of this patent term adjustment calculation including the information required by 37 CFR 1.705(b)(2) and the fee required by 37 CFR 1.18(e), the USPTO will issue a certificate of correction reflecting the PTA determination noted above.

Patentee should be aware that in order to preserve the right to review in the United States District Court for the District of Columbia of the USPTO patent term adjustment determination, patentee must ensure that he or she also take the steps required under 35 U.S.C. 154(b)(4)(A) in a timely manner. Nothing in the request for recalculation should be construed as providing an alternative time frame for commencing a civil action under 35 U.S.C. 154(b)(4)(A).

Any questions concerning this decision should be directed to the Office of Patent Legal Administration at 571-272-7702.

UNITED STATES PATENT AND TRADEMARK OFFICE

UNITED STATES DEPARTMENT OF COMMERCE
United States Patent and Trademark Office
Address: COMMISSIONER FOR PATENTS
P.O. Box 1450
Alexandria, Virginia 22313-1450
www.uspto.gov

SIDLEY AUSTIN LLP
717 NORTH HARWOOD
SUITE 3400
DALLAS, TX 75201

Mail Date: 05/17/2010

Applicant : Junji Sato
Patent Number : 7608979
Issue Date : 10/27/2009
Application No: 11/493,227
Filed : 07/26/2006

: NOTICE CONCERNING IMPROPER
: CALCULATION OF PATENT TERM
: ADJUSTMENT BASED UPON USPTO
: IMPROPERLY MEASURING REDUCTION
: PERIOD UNDER 37 CFR 1.704(c)(10).

The United States Patent and Trademark Office (USPTO) discovered that in processing the recent recalculation decisions mailed in response to patentee's filed Request for Recalculation of Patent Term Adjustment in view of Wyeth, the USPTO improperly measured the reduction period for reductions under 37 CFR 1.704(c)(10). Pursuant to 37 CFR 1.704(c)(10), patentee's reduction begins on the date of filing the amendment under 37 CFR 1.312 ("1.312 amendment") or other related paper and ends on the date that the Office mails a response to the filing of the 1.312 amendment or other paper. It has been discovered that during the recalculation, the calculation failed to the limit the reduction to the mail date of the response to the 1.312 amendment or other paper. Accordingly, patentee's reductions were greater than warranted.

This notice **VACATES** the previous GRANTED request for recalculation and provides patentee with a revised GRANTED recalculation.

The patent term adjustment has been determined to be **540** days. The USPTO will *sua sponte* issue a certificate of correction reflecting the amount of patent term adjustment (PTA) days determined by the recalculation.

Prior to the issuance of the certificate of correction, the USPTO will afford patentee an opportunity to be heard and request reconsideration. Accordingly, patentee has **one month or thirty (30) days** from the mail date of this notice, whichever is longer, to file a request for reconsideration of this PTA calculation. See 35 U.S.C. § 154(b)(3)(B)(ii) and 37 CFR 1.322(a)(4).

Patentee should use document code PET.OP if electronically filing a request for reconsideration of this PTA calculation. The patentee must also include the information required by 37 CFR 1.705(b)(2), and the fee required by 37 CFR 1.18(e). If patentee does not file a timely request for reconsideration of this PTA calculation, including the information required by 37 CFR 1.705(b)(2) and the fee required by 37 CFR 1.18(e), the USPTO will issue a certificate of correction reflecting the PTA determination noted above.

Patentee should be aware that in order to preserve the right of review of the USPTO's PTA determination in the United States District Court for the District of Columbia, patentee must ensure that the steps required under 35 U.S.C. § 154 (b)(4) are taken in a timely manner. Nothing in the request for recalculation should be construed as providing an alternative time frame for commencing a civil action under 35 U.S.C. § 154(b)(4).

UNITED STATES PATENT AND TRADEMARK OFFICE

Commissioner for Patents
United States Patent and Trademark Office
P.O. Box 1450
Alexandria, VA 22313-1450
www.uspto.gov

NIXON PEABODY, LLP
161 N. CLARK ST.
48TH FLOOR
CHICAGO, IL 60601-3213

MAILED

FEB 11 2009

OFFICE OF PETITIONS

In re Application of :
Edward F. Stephens, et al. :
Application No. 11/493,228 : ON PETITION
Filed: July 26, 2006 :
Attorney Docket No. 247080-000056USPT :

This is a decision on the petition under 37 CFR 1.182, filed December 17, 2008, to change the order of the names of the inventors.

The petition is **GRANTED**.

Office records have been corrected to reflect the change in the order of the named inventors. A corrected Filing Receipt, which sets forth the desired order of the named inventors, accompanies this decision on petition.

As authorized, the $400 fee for the petition under 37 CFR 1.182 has been assessed to petitioner's deposit account.

This application is being referred to the Office of Data Management.

Any questions concerning this matter may be directed to the undersigned at (571) 272-3204.

Sherry D. Brinkley
Petitions Examiner
Office of Petitions

Attachment

UNITED STATES PATENT AND TRADEMARK OFFICE

UNITED STATES DEPARTMENT OF COMMERCE
United States Patent and Trademark Office
Address: COMMISSIONER FOR PATENTS
P.O. Box 1450
Alexandria, Virginia 22313-1450
www.uspto.gov

APPLICATION NUMBER	FILING or 371(c) DATE	GRP ART UNIT	FIL FEE REC'D	ATTY.DOCKET.NO	TOT CLAIMS	IND CLAIMS
11/493,228	07/26/2006	2828	1000	247080-000056USPT	20	3

CONFIRMATION NO. 8428

CORRECTED FILING RECEIPT

70001
NIXON PEABODY, LLP
161 N. CLARK ST.
48TH FLOOR
CHICAGO, IL 60601-3213

Date Mailed: 02/04/2009

Receipt is acknowledged of this non-provisional patent application. The application will be taken up for examination in due course. Applicant will be notified as to the results of the examination. Any correspondence concerning the application must include the following identification information: the U.S. APPLICATION NUMBER, FILING DATE, NAME OF APPLICANT, and TITLE OF INVENTION. Fees transmitted by check or draft are subject to collection. Please verify the accuracy of the data presented on this receipt. **If an error is noted on this Filing Receipt, please submit a written request for a Filing Receipt Correction. Please provide a copy of this Filing Receipt with the changes noted thereon. If you received a "Notice to File Missing Parts" for this application, please submit any corrections to this Filing Receipt with your reply to the Notice. When the USPTO processes the reply to the Notice, the USPTO will generate another Filing Receipt incorporating the requested corrections**

Applicant(s)

Edward F. Stephens, Golden Eagle, IL;
Steven M. Coleman, Bedford, NH;

Assignment For Published Patent Application

Northrop Grumman Corporation

Power of Attorney: The patent practitioners associated with Customer Number 70001

Domestic Priority data as claimed by applicant

Foreign Applications

If Required, Foreign Filing License Granted: 08/16/2006

The country code and number of your priority application, to be used for filing abroad under the Paris Convention, is **US 11/493,228**

Projected Publication Date: Not Applicable

Non-Publication Request: No

Early Publication Request: No

Title

MICROCHANNEL COOLER FOR HIGH EFFICIENCY LASER DIODE HEAT EXTRACTION

Preliminary Class

372

PROTECTING YOUR INVENTION OUTSIDE THE UNITED STATES

Since the rights granted by a U.S. patent extend only throughout the territory of the United States and have no effect in a foreign country, an inventor who wishes patent protection in another country must apply for a patent in a specific country or in regional patent offices. Applicants may wish to consider the filing of an international application under the Patent Cooperation Treaty (PCT). An international (PCT) application generally has the same effect as a regular national patent application in each PCT-member country. The PCT process **simplifies** the filing of patent applications on the same invention in member countries, but **does not result** in a grant of "an international patent" and does not eliminate the need of applicants to file additional documents and fees in countries where patent protection is desired.

Almost every country has its own patent law, and a person desiring a patent in a particular country must make an application for patent in that country in accordance with its particular laws. Since the laws of many countries differ in various respects from the patent law of the United States, applicants are advised to seek guidance from specific foreign countries to ensure that patent rights are not lost prematurely.

Applicants also are advised that in the case of inventions made in the United States, the Director of the USPTO must issue a license before applicants can apply for a patent in a foreign country. The filing of a U.S. patent application serves as a request for a foreign filing license. The application's filing receipt contains further information and guidance as to the status of applicant's license for foreign filing.

Applicants may wish to consult the USPTO booklet, "General Information Concerning Patents" (specifically, the section entitled "Treaties and Foreign Patents") for more information on timeframes and deadlines for filing foreign patent applications. The guide is available either by contacting the USPTO Contact Center at 800-786-9199, or it can be viewed on the USPTO website at http://www.uspto.gov/web/offices/pac/doc/general/index.html.

For information on preventing theft of your intellectual property (patents, trademarks and copyrights), you may wish to consult the U.S. Government website, http://www.stopfakes.gov. Part of a Department of Commerce initiative, this website includes self-help "toolkits" giving innovators guidance on how to protect intellectual property in specific countries such as China, Korea and Mexico. For questions regarding patent enforcement issues, applicants may call the U.S. Government hotline at 1-866-999-HALT (1-866-999-4158).

LICENSE FOR FOREIGN FILING UNDER

Title 35, United States Code, Section 184

Title 37, Code of Federal Regulations, 5.11 & 5.15

GRANTED

The applicant has been granted a license under 35 U.S.C. 184, if the phrase "IF REQUIRED, FOREIGN FILING LICENSE GRANTED" followed by a date appears on this form. Such licenses are issued in all applications where the conditions for issuance of a license have been met, regardless of whether or not a license may be required as

set forth in 37 CFR 5.15. The scope and limitations of this license are set forth in 37 CFR 5.15(a) unless an earlier license has been issued under 37 CFR 5.15(b). The license is subject to revocation upon written notification. The date indicated is the effective date of the license, unless an earlier license of similar scope has been granted under 37 CFR 5.13 or 5.14.

This license is to be retained by the licensee and may be used at any time on or after the effective date thereof unless it is revoked. This license is automatically transferred to any related applications(s) filed under 37 CFR 1.53(d). This license is not retroactive.

The grant of a license does not in any way lessen the responsibility of a licensee for the security of the subject matter as imposed by any Government contract or the provisions of existing laws relating to espionage and the national security or the export of technical data. Licensees should apprise themselves of current regulations especially with respect to certain countries, of other agencies, particularly the Office of Defense Trade Controls, Department of State (with respect to Arms, Munitions and Implements of War (22 CFR 121-128)); the Bureau of Industry and Security, Department of Commerce (15 CFR parts 730-774); the Office of Foreign AssetsControl, Department of Treasury (31 CFR Parts 500+) and the Department of Energy.

NOT GRANTED

No license under 35 U.S.C. 184 has been granted at this time, if the phrase "IF REQUIRED, FOREIGN FILING LICENSE GRANTED" DOES NOT appear on this form. Applicant may still petition for a license under 37 CFR 5.12, if a license is desired before the expiration of 6 months from the filing date of the application. If 6 months has lapsed from the filing date of this application and the licensee has not received any indication of a secrecy order under 35 U.S.C. 181, the licensee may foreign file the application pursuant to 37 CFR 5.15(b).

UNITED STATES PATENT AND TRADEMARK OFFICE

UNITED STATES DEPARTMENT OF COMMERCE
United States Patent and Trademark Office
Address: COMMISSIONER FOR PATENTS
P.O. Box 1450
Alexandria, Virginia 22313-1450
www.uspto.gov

NIXON PEABODY, LLP
300 S. Riverside Plaza, 16th Floor
CHICAGO, IL 60606-6613

Mail Date: 04/21/2010

Applicant	: Edward F. Stephens	: DECISION ON REQUEST FOR
Patent Number	: 7656915	: RECALCULATION of PATENT
Issue Date	: 02/02/2010	: TERM ADJUSTMENT IN VIEW
Appliction No	: 11/493,228	: OF WYETH AND NOTICE OF INTENT TO
Filed	: 07/26/2006	: ISSUE CERTIFICATE OF CORRECTION
		:

The Request for Recalculation is **GRANTED** to the extent indicated.

The patent term adjustment has been determined to be **6** days. The USPTO will *sua sponte* issue a certificate of correction reflecting the amount of PTA days determined by the recalculation.

Prior to the issuance of the certificate of correction, the USPTO will afford patentee an opportunity to be heard and request reconsideration. Accordingly, patentee has **one month or thirty (30) days**, whichever is longer, to file a request for reconsideration of this patent term adjustment calculation. See 35 U.S.C. 154(b)(3)(B)(ii) and 37 CFR 1.322(a)(4). No extensions of time will be granted under 37 CFR 1.136.

Patentee should use document code PET.OP if electronically filing a request for reconsideration of this patent term adjustment calculation. The patentee must also include the information required by 37 CFR 1.705(b)(2) and the fee required by 37 CFR 1.18(e). If patentee does not file a timely request for reconsideration of this patent term adjustment calculation including the information required by 37 CFR 1.705(b)(2) and the fee required by 37 CFR 1.18(e), the USPTO will issue a certificate of correction reflecting the PTA determination noted above.

Patentee should be aware that in order to preserve the right to review in the United States District Court for the District of Columbia of the USPTO patent term adjustment determination, patentee must ensure that he or she also take the steps required under 35 U.S.C. 154(b)(4)(A) in a timely manner. Nothing in the request for recalculation should be construed as providing an alternative time frame for commencing a civil action under 35 U.S.C. 154(b)(4)(A).

Any questions concerning this decision should be directed to the Office of Patent Legal Administration at 571-272-7702.

UNITED STATES PATENT AND TRADEMARK OFFICE

Commissioner for Patents
United States Patent and Trademark Office
P.O. Box 1450
Alexandria, VA 22313-1450
www.uspto.gov

HEWLETT PACKARD COMNPANY
PO BOX 272400, 3404 E. HARMONY ROAD
INTELLECTUAL PROPERTY ADMINISTRATION
FORT COLLINS CO 80527-2400

COPY MAILED

NOV 2 5 2008

OFFICE OF PETITIONS

In re Application of :
Manish Srivastava et al :
Application No. 11/493,238 : DECISION ON PETITION
Filed: July 26, 2006 :
Attorney Docket No. 200406069-2 :

This is a decision on the petition under the unintentional provisions of 37 CFR 1.137(b), filed September 9, 2008, to revive the above-identified application.

The petition is **GRANTED**.

The petition satisfies the conditions for revival pursuant to the provisions of 37 CFR 1.137(b) in that (1) the reply in the form of a letter requesting not to have a first-action interview; (2) the petition fee; and (3) the required statement of unintentional delay have been received. Accordingly, the reply to the communication mailed July 21, 2008, is accepted as having been unintentionally delayed.

It is not apparent whether the person signing the statement of unintentional delay was in a position to have firsthand or direct knowledge of the facts and circumstances of the delay at issue. Nevertheless, such statement is being treated as having been made as the result of a reasonable inquiry into the facts and circumstances of such delay. See 37 CFR 10.18(b) and Changes to Patent Practice and Procedure; Final Rule Notice, 62 Fed. Reg. 53131, 53178 (October 10, 1997), 1203 Off. Gaz. Pat. Office 63, 103 (October 21, 1997). In the event that such an inquiry has not been made, petitioner must make such an inquiry. If such inquiry results in the discovery that it is not correct that the entire delay in filing the required reply from the due date for the reply until the filing of a grantable petition pursuant to 37 CFR 1.137(b) was unintentional, petitioner must notify the Office.

There is no indication that the person signing the petition was ever given a power of attorney to prosecute the application. If the person signing the petition desires to receive future

correspondence regarding this application, the appropriate power of attorney document must be submitted. While a courtesy copy of this decision is being mailed to the person signing the petition, all future correspondence will be directed to the address currently of record until appropriate instructions are received.

Telephone inquiries concerning this decision should be directed to the undersigned at (571) 272-3208.

This application is being referred to Technology Center AU 2169.

Karen Creasy

Karen Creasy
Petitions Examiner
Office of Petitions

cc:

THOMAS, KAYDEN, HORSTEMEYER & RISLEY LLP
600 GALLERIA PARKWAY
SUITE 1500
ATLANTA, GA 30339

UNITED STATES DEPARTMENT OF COMMERCE
Patent and Trademark Office
ASSISTANT SECRETARY OF COMMERCE AND
COMMISSIONER OF PATENTS AND TRADEMARKS
Washington, DC 20231

1/15/10

Patent No. :7634245
Inventor(s) :Zdravko Boos
Issued : 12/15/2009
Title : RECEIVER, IN PARTICULAR FOR MOBILE RADIO
Atty.doc./File No.

Request for Certificates of Correction

Consideration has been given to your request for the issuance of a Certificate of Correction, for the above – identified patent under the provisions of CFR 1.322.

Inspection of the application for the patent reveals claims 1 & 2 is printed in accordance with the record please show evidence of supporting data or amendment. Therefore being no fault on the Patent and Trademark Office, It has no authority to issue a certificate of correction under the provision of 1.322.

In view of the forgoing, your request in this matter, is hereby denied.

Future written correspondence concerning this matter should be filed and directed to Decisions & Certificates of Correction Branch.

Henry Randall
Decisions & Certificates
of Correction Branch
(703) 756-1571

Lerner Greenberg Stemer LLP
P.O. BOX 2480
HollyWood, FL 33020

HR

UNITED STATES PATENT AND TRADEMARK OFFICE

UNITED STATES DEPARTMENT OF COMMERCE
United States Patent and Trademark Office
Address: COMMISSIONER FOR PATENTS
P.O. Box 1450
Alexandria, Virginia 22313-1450
www.uspto.gov

HAYNES AND BOONE, LLP
IP Section
2323 Victory Avenue
SUITE 700
Dallas, TX 75219

Mail Date: 04/21/2010

Applicant	: Harmon C. Fowler	: DECISION ON REQUEST FOR
Patent Number	: 7664578	: RECALCULATION of PATENT
Issue Date	: 02/16/2010	: TERM ADJUSTMENT IN VIEW
Appliction No	: 11/493,244	: OF WYETH AND NOTICE OF INTENT TO
Filed	: 07/26/2006	: ISSUE CERTIFICATE OF CORRECTION
		:

The Request for Recalculation is **GRANTED** to the extent indicated.

The patent term adjustment has been determined to be **764** days. The USPTO will *sua sponte* issue a certificate of correction reflecting the amount of PTA days determined by the recalculation.

Prior to the issuance of the certificate of correction, the USPTO will afford patentee an opportunity to be heard and request reconsideration. Accordingly, patentee has **one month or thirty (30) days**, whichever is longer, to file a request for reconsideration of this patent term adjustment calculation. See 35 U.S.C. 154(b)(3)(B)(ii) and 37 CFR 1.322(a)(4). No extensions of time will be granted under 37 CFR 1.136.

Patentee should use document code PET.OP if electronically filing a request for reconsideration of this patent term adjustment calculation. The patentee must also include the information required by 37 CFR 1.705(b)(2) and the fee required by 37 CFR 1.18(e). If patentee does not file a timely request for reconsideration of this patent term adjustment calculation including the information required by 37 CFR 1.705(b)(2) and the fee required by 37 CFR 1.18(e), the USPTO will issue a certificate of correction reflecting the PTA determination noted above.

Patentee should be aware that in order to preserve the right to review in the United States District Court for the District of Columbia of the USPTO patent term adjustment determination, patentee must ensure that he or she also take the steps required under 35 U.S.C. 154(b)(4)(A) in a timely manner. Nothing in the request for recalculation should be construed as providing an alternative time frame for commencing a civil action under 35 U.S.C. 154(b)(4)(A).

Any questions concerning this decision should be directed to the Office of Patent Legal Administration at 571-272-7702.

UNITED STATES PATENT AND TRADEMARK OFFICE

Commissioner for Patents
United States Patent and Trademark Office
P.O. Box 1450
Alexandria, VA 22313-1450
www.uspto.gov

INTELLECTUAL PROPERTY MANAGEMENT
BOEING MANAGEMENT COMPANY
P.O. BOX 2515
MAIL CODE 110-SD54
SEAL BEACH CA 90740-1515

COPY MAILED

JUN 25 2008

OFFICE OF PETITIONS

In re Application of :
James B. Baker :
Application No.: 11/493,256 : ON PETITION
Filed: July 26, 2006 :
Attorney Docket No.: 7784-915 :

This is a decision on the petition, filed June 23, 2008, under 37 CFR 1.313(c)(2) to withdraw the above-identified application from issue after payment of the issue fee.

The petition is **GRANTED**.

The above-identified application is withdrawn from issue for consideration of a submission under 37 CFR 1.114 (request for continued examination). See 37 CFR 1.313(c)(2).

Petitioner is advised that the issue fee paid on June 11, 2008, cannot be refunded. If, however, this application is again allowed, petitioner may request that it be applied towards the issue fee required by the new Notice of Allowance.[1]

The file does not indicate a change of address has been submitted, although the address given on the petition differs from the address of record. If appropriate, a change of address should be filed in accordance with MPEP 601.03. A courtesy copy of this decision is being mailed to the address given on the petition; however, the Office will mail all future correspondence solely to the address of record.

Telephone inquiries relating to this decision should be directed to the undersigned at (571) 272-3204.

[1] *The request to apply the issue fee to the new Notice may be satisfied by completing and returning the new Part B - Fee(s) Transmittal Form (along with any balance due at the time of submission). Petitioner is advised that the Issue Fee Transmittal Form must be completed and timely submitted to avoid abandonment of the application.*

The application is being referred to Technology Center AU 2816 for further processing of the request for continued examination under 37 CFR 1.114.

Sherry D. Brinkley
Petitions Examiner
Office of Petitions

cc: MARK D. ELCHUK
HARNESS, DICKEY & PIERCE, P.L.C.
P.O. BOX 828
BLOOMFIELD HILLS, MI 48303

UNITED STATES PATENT AND TRADEMARK OFFICE

Commissioner for Patents
United States Patent and Trademark Office
P.O. Box 1450
Alexandria, VA 22313-1450
www.uspto

GARLICK HARRISON & MARKISON
P.O. BOX 160727
AUSTIN TX 78716-0727

COPY MAILED
JAN 19 2010

In re Application of	:	
Cameron et al.	:	
Application No. 11/493,273	:	DECISION ON PETITION
Filed: July 26, 2006	:	
Attorney Docket No. BP2333.2C1	:	

This is a decision on the petition under the unintentional provisions of 37 CFR 1.137(b), filed November 24, 2009, to revive the above-identified application.

The petition is **GRANTED**.

The application became abandoned for failure to reply in a timely manner to the final Office action mailed November 12, 2008, which set a shortened statutory period for reply of three (3) months. No extensions of time under the provisions of 37 CFR 1.136(a) were timely obtained. Accordingly, the application became abandoned on February 13, 2009. A Notice of Abandonment was mailed October 9, 2009.

The petition satisfies the requirements of 37 CFR 1.137(b) in that petitioner has supplied (1) the reply in the form of a continuation, (2) the petition fee of $1,620.00, and (3) an adequate statement of unintentional delay.

The above-identified application is being revived solely for purposes of continuity. As continuity has been established by this decision reviving the above-identified application, the above-identified application is again abandoned in favor of continuing application No. 12/463,386, filed May 9, 2009.

Additionally, an extension of time under 37 CFR 1.136 must be filed prior to the expiration of the maximum extendable period for reply. *See* In re Application of S., 8 USPQ2d 1630, 1631 (Comm'r Pats. 1988). Since the $1,110.00, three- month extension of time fee submitted with the petition on November 24, 2009 was subsequent to the maximum extendable period for reply, this fee is unnecessary and will be refunded to petitioner's credit card in due course.

Telephone inquiries concerning this decision should be directed to the undersigned at (571) 272-7751.

Joan Olszewski
Petitions Examiner
Office of Petitions

UNITED STATES PATENT AND TRADEMARK OFFICE

Commissioner for Patents
United States Patent and Trademark Office
P.O. Box 1450
Alexandria, VA 22313-1450
www.uspto.gov

LANCE J. LIEBERMAN, ESQ.
COHEN, POTANI, LIEBERMAN & PAVANE LLP
SUITE 1210
551 FIFTH AVENUE
NEW YORK, NY 10176

COPY MAILED

DEC 0 9 2009

OFFICE OF PETITIONS

In re Application of :
Bjorn A.J. Angelsen, et al. :
Application No. 11/493,283 : DECISION ON PETITION
Filed: July 26, 2006 :
Attorney Docket No. 4215-34 :

This is a decision on the petition, filed October 6, 2009, which is being treated as a petition under 37 CFR 1.181 (no fee) requesting withdrawal of the holding of abandonment in the above-identified application.

The petition is **GRANTED**.

This application was held abandoned for failure to timely pay the issue and publication fees on or before September 11, 2009, as required by the Notice of Allowance and Fee(s) Due (Notice), mailed June 11, 2009.

Petitioner asserts that the Notice dated June 11, 2009 was not received.

A review of the application file reveals no irregularities in the mailing of the Notice mailed June 11, 2009. Thus, there is a strong presumption that the correspondence was properly mailed to the applicant at the correspondence address of record. In the absence of demonstrated irregularities in mailing of this Notice, petitioner must submit evidence to overcome this presumption. The following showing is required:

> Practitioner must state that the Office action was not received at the correspondence address of record, and that a search of the practitioner's record(s), including any file jacket or the equivalent, and the application contents, indicates that the Office action was not received. A copy of the record(s) used by the practitioner where the non-received Office action would have been entered had it been received is required.

> A copy of the practitioner's record(s) required to show non-receipt of the Office action should include the master docket for the firm. That is, if a three month period for reply was set in the nonreceived Office action, a copy of the master docket report showing all replies docketed for a date three months from the mail date of the nonreceived Office action must be submitted as documentary proof of nonreceipt of the Office action. If no such master docket exists, the practitioner should so state and provide other evidence such as, but not limited to, the following: the application file jacket; incoming mail log; calendar; reminder system; or the individual docket record for the application in question.

Petitioner has adequately supported his claim of non-receipt with such evidence.

In view of the above, the Notice of Abandonment is hereby vacated and the holding of abandonment withdrawn.

This application is being referred to the Technology Center AU 3768 technical support staff for **re-mailing** the Notice of Allowability and the Notice of Allowance and Fee(s) Due of June 11, 2009. The period for paying the issue and publication fees and submitting corrected drawings will be reset to expire three (3) months from the date the Notices are re-mailed. This period is not extendable under the provisions of 37 CFR 1.136.

Sherry D. Brinkley
Petitions Examiner
Office of Petitions

UNITED STATES PATENT AND TRADEMARK OFFICE

UNITED STATES DEPARTMENT OF COMMERCE
United States Patent and Trademark Office
Address: COMMISSIONER FOR PATENTS
P.O. Box 1450
Alexandria, Virginia 22313-1450
www.uspto.gov

APPLICATION NO.	FILING DATE	FIRST NAMED INVENTOR	ATTORNEY DOCKET NO.	CONFIRMATION NO.
11/493,287	07/26/2006	Michael L. Rudd	200600132-1	8984

7590 04/09/2008

HEWLETT PACKARD COMPANY
P O BOX 272400, 3404 E. HARMONY ROAD
INTELLECTUAL PROPERTY ADMINISTRATION
FORT COLLINS, CO 80527-2400

EXAMINER	
WU, XIAO MIN	

ART UNIT	PAPER NUMBER
2628	

NOTIFICATION DATE	DELIVERY MODE
04/09/2008	ELECTRONIC

DECISION GRANTING PETITION UNDER 37 CFR 1.138(d)

The declaration of express abandonment is recognized

This is in response to the petition under 37 CFR 1.138(d), requesting for a refund of any previously paid search fee and excess claims fee in the above-identified application.

The petition is granted.

The express abandonment is recognized. Any previously paid search fee and excess claims fee are hereby refunded.

Telephone inquiries should be directed to the Office of Data Management at (571) 272-4200.

Patent Publication Branch
Office of Data Management

Adjustment date: 04/08/2008 KKING1
07/28/2006 STEUMEL1 00000007 082025 11493287
02 FC:1111 500.00 CR

UNITED STATES PATENT AND TRADEMARK OFFICE

Commissioner for Patents
United States Patent and Trademark Office
P.O. Box 1450
Alexandria, VA 22313-1450
www.uspto.gov

Fenwick & West LLP
Silicon Valley Center
801 California Street
Mountain View, CA 94041

COPY MAILED

DEC 0 5 2008

OFFICE OF PETITIONS

In re Application of :
Mark Zuckerberg et al. :
Application No. 11/493,291 : DECISION ON PETITION
Filed: July 25, 2006 :
Attorney Docket No. 26295-14131 :

This is a decision on the petition under 37 CFR 1.182, filed, September 12, 2008, to change the name of inventor "Chris Kelly" to -- Chris Christopher Kelly --.

The petition is **DISMISSED**.

The petition states that the inventorship should be changed "to reflect the *first name* of the second inventor as follows (the additions shown underlined): Chris Christopher Kelly", yet signed the petition as Christopher Kelly. It is not clear from the petition whether petitioner desires to change the name of "Chris Kelly" to "Chris Christopher Kelly" or "Christopher Kelly".

In view of the above, the petition under § 1.182 cannot be granted at this time to change the inventor's name.

Further correspondence with respect to this matter should be addressed as follows:

By mail: Mail Stop PETITIONS
Commissioner for Patents
Post Office Box 1450
Alexandria, VA 22313-1450

By hand: Customer Service Window
Mail Stop Petitions
Randolph Building
401 Dulany Street
Alexandria, VA 22314

By fax: (571) 273-8300
ATTN: Office of Petitions

Telephone inquiries concerning this decision should be directed to Shelley Clement at (571)272-6052 or in her absence to the undersigned at (571)272-7099.

David Bucci
Petitions Examiner
Office of Petitions

UNITED STATES PATENT AND TRADEMARK OFFICE

Commissioner for Patents
United States Patent and Trademark Office
P.O. Box 1450
Alexandria, VA 22313-1450
www.uspto.gov

FENWICK & WEST LLP
SILICON VALLEY CENTER
801 CALIFORNIA STREET
MOUNTAIN VIEW CA 94041

COPY MAILED

APR 0 7 2009

OFFICE OF PETITIONS

In re Application of :
Mark ZUCKERMAN et al. :
Application No. 11/493,291 : DECISION ON PETITION
Filed: July 25, 2006 :
Attorney Docket No. 26295-14131 :

This is a decision on the renewed petition under 37 CFR 1.182, filed, January 16, 2009, to change the name of inventor "Chris Kelly" to – Christopher Kelly --.

The petition is **GRANTED**.

Office records have been updated to reflect the inventor's change of name. A corrected Filing Receipt, which reflects the inventor's change of name, accompanies this decision on petition.

Any questions concerning this matter may be directed to David Bucci at (571) 272-7099. Any questions concerning the examination procedures or status of the application should be directed to the Technology Center.

This application is being referred to Technology Center AU 2432 for prosecution on the merits.

David Bucci
Petitions Examiner
Office of Petitions

ATTACHMENT: Corrected Filing Receipt

UNITED STATES PATENT AND TRADEMARK OFFICE

UNITED STATES DEPARTMENT OF COMMERCE
United States Patent and Trademark Office
Address: COMMISSIONER FOR PATENTS
P.O. Box 1450
Alexandria, Virginia 22313-1450
www.uspto.gov

APPLICATION NUMBER	FILING or 371(c) DATE	GRP ART UNIT	FIL FEE REC'D	ATTY.DOCKET.NO	TOT CLAIMS	IND CLAIMS
11/493,291	07/25/2006	2432	550	26295-14131	22	3

CONFIRMATION NO. 8962

CORRECTED FILING RECEIPT

758
FENWICK & WEST LLP
SILICON VALLEY CENTER
801 CALIFORNIA STREET
MOUNTAIN VIEW, CA 94041

Date Mailed: 04/07/2009

Receipt is acknowledged of this non-provisional patent application. The application will be taken up for examination in due course. Applicant will be notified as to the results of the examination. Any correspondence concerning the application must include the following identification information: the U.S. APPLICATION NUMBER, FILING DATE, NAME OF APPLICANT, and TITLE OF INVENTION. Fees transmitted by check or draft are subject to collection. Please verify the accuracy of the data presented on this receipt. **If an error is noted on this Filing Receipt, please submit a written request for a Filing Receipt Correction. Please provide a copy of this Filing Receipt with the changes noted thereon. If you received a "Notice to File Missing Parts" for this application, please submit any corrections to this Filing Receipt with your reply to the Notice. When the USPTO processes the reply to the Notice, the USPTO will generate another Filing Receipt incorporating the requested corrections**

Applicant(s)

Mark Zuckerberg, Palo Alto, CA;
Christopher Kelly, Palo alto, CA;

Assignment For Published Patent Application

Facebook, Inc.

Power of Attorney: The patent practitioners associated with Customer Number 00758

Domestic Priority data as claimed by applicant

Foreign Applications

If Required, Foreign Filing License Granted: 08/16/2006

The country code and number of your priority application, to be used for filing abroad under the Paris Convention, is **US 11/493,291**

Projected Publication Date: Not Applicable

Non-Publication Request: No

Early Publication Request: No
**** SMALL ENTITY ****

Title

Systems and methods for dynamically generating a privacy summary

Preliminary Class

726

PROTECTING YOUR INVENTION OUTSIDE THE UNITED STATES

Since the rights granted by a U.S. patent extend only throughout the territory of the United States and have no effect in a foreign country, an inventor who wishes patent protection in another country must apply for a patent in a specific country or in regional patent offices. Applicants may wish to consider the filing of an international application under the Patent Cooperation Treaty (PCT). An international (PCT) application generally has the same effect as a regular national patent application in each PCT-member country. The PCT process **simplifies** the filing of patent applications on the same invention in member countries, but **does not result** in a grant of "an international patent" and does not eliminate the need of applicants to file additional documents and fees in countries where patent protection is desired.

Almost every country has its own patent law, and a person desiring a patent in a particular country must make an application for patent in that country in accordance with its particular laws. Since the laws of many countries differ in various respects from the patent law of the United States, applicants are advised to seek guidance from specific foreign countries to ensure that patent rights are not lost prematurely.

Applicants also are advised that in the case of inventions made in the United States, the Director of the USPTO must issue a license before applicants can apply for a patent in a foreign country. The filing of a U.S. patent application serves as a request for a foreign filing license. The application's filing receipt contains further information and guidance as to the status of applicant's license for foreign filing.

Applicants may wish to consult the USPTO booklet, "General Information Concerning Patents" (specifically, the section entitled "Treaties and Foreign Patents") for more information on timeframes and deadlines for filing foreign patent applications. The guide is available either by contacting the USPTO Contact Center at 800-786-9199, or it can be viewed on the USPTO website at http://www.uspto.gov/web/offices/pac/doc/general/index.html.

For information on preventing theft of your intellectual property (patents, trademarks and copyrights), you may wish to consult the U.S. Government website, http://www.stopfakes.gov. Part of a Department of Commerce initiative, this website includes self-help "toolkits" giving innovators guidance on how to protect intellectual property in specific countries such as China, Korea and Mexico. For questions regarding patent enforcement issues, applicants may call the U.S. Government hotline at 1-866-999-HALT (1-866-999-4158).

LICENSE FOR FOREIGN FILING UNDER

Title 35, United States Code, Section 184

Title 37, Code of Federal Regulations, 5.11 & 5.15

GRANTED

The applicant has been granted a license under 35 U.S.C. 184, if the phrase "IF REQUIRED, FOREIGN FILING LICENSE GRANTED" followed by a date appears on this form. Such licenses are issued in all applications where the conditions for issuance of a license have been met, regardless of whether or not a license may be required as

set forth in 37 CFR 5.15. The scope and limitations of this license are set forth in 37 CFR 5.15(a) unless an earlier license has been issued under 37 CFR 5.15(b). The license is subject to revocation upon written notification. The date indicated is the effective date of the license, unless an earlier license of similar scope has been granted under 37 CFR 5.13 or 5.14.

This license is to be retained by the licensee and may be used at any time on or after the effective date thereof unless it is revoked. This license is automatically transferred to any related applications(s) filed under 37 CFR 1.53(d). This license is not retroactive.

The grant of a license does not in any way lessen the responsibility of a licensee for the security of the subject matter as imposed by any Government contract or the provisions of existing laws relating to espionage and the national security or the export of technical data. Licensees should apprise themselves of current regulations especially with respect to certain countries, of other agencies, particularly the Office of Defense Trade Controls, Department of State (with respect to Arms, Munitions and Implements of War (22 CFR 121-128)); the Bureau of Industry and Security, Department of Commerce (15 CFR parts 730-774); the Office of Foreign AssetsControl, Department of Treasury (31 CFR Parts 500+) and the Department of Energy.

NOT GRANTED

No license under 35 U.S.C. 184 has been granted at this time, if the phrase "IF REQUIRED, FOREIGN FILING LICENSE GRANTED" DOES NOT appear on this form. Applicant may still petition for a license under 37 CFR 5.12, if a license is desired before the expiration of 6 months from the filing date of the application. If 6 months has lapsed from the filing date of this application and the licensee has not received any indication of a secrecy order under 35 U.S.C. 181, the licensee may foreign file the application pursuant to 37 CFR 5.15(b).

UNITED STATES PATENT AND TRADEMARK OFFICE

Commissioner for Patents
United States Patent and Trademark Office
P.O. Box 1450
Alexandria, VA 22313-1450
www.uspto.gov

Carr & Ferrell LLP
2200 Geng Road
Palo Alto, CA 94303

COPY MAILED

AUG 2 5 2008

In re Application of	:	
Johnathan Ephraim David Hurwitz	:	
Application No. 11/493,292	:	DECISION ON PETITION
Filed: July 25, 2006	:	TO WITHDRAW
Attorney Docket No. 5368.03 (SMC)	:	FROM RECORD
	:	

This is a decision on the Request to Withdraw as attorney or agent of record under 37 C.F.R. § 1.36(b), filed April 28, 2008.

The request is **NOT APPROVED** because it is moot.

A review of the file record indicates that the power of attorney to Carr & Ferrell LLP has been revoked by the assignee of the patent application on May 28, 2008. Accordingly, the request to withdraw under 37 C.F.R. § 1.36(b) is moot.

All future communications from the Office will continue to be directed to the below-listed address until otherwise notified by applicant.

Telephone inquires concerning this decision should be directed to Terri Williams at 571-272-2991.

Terri Williams
Petitions Examiner
Office of Petitions

cc: **Peters Verny, L.L.P.**
425 Sherman Avenue
Suite 230
Palo Alto, CA 94306

UNITED STATES PATENT AND TRADEMARK OFFICE

Commissioner for Patents
United States Patent and Trademark Office
P.O. Box 1450
Alexandria, VA 22313-1450
www.uspto.gov

ROBERT NEVILLE O'BRIEN
2614 QUEENSWOOD DR.
VICTORIA BC V8N 1X5 CA CANADA

MAILED

MAR 30 2009

OFFICE OF PETITIONS

In re Application of :
Robert Neville O'Brien :
Application No. 11/493,299 : ON PETITION
Filed: July 27, 2006 :
Attorney Docket No. None :

This is a decision on the petition under the unintentional provisions of 37 CFR 1.137(b), filed February 6, 2009, to revive the above-identified application.

The petition is **GRANTED**.

The application became abandoned for failure to reply in a timely manner to the Notice of Non-Compliant Amendment, mailed May 11, 2007, which set a shortened statutory period for reply of one (1) month or thirty (30) days (whichever is later). No extensions of time under the provisions of 37 CFR 1.136(a) were obtained. Accordingly, the application became abandoned on June 12, 2007. A Notice of Abandonment was mailed January 22, 2008.

The petition satisfies the requirements of 37 CFR 1.137(b) in that petitioner has supplied (1) the reply in the form of an amendment , (2) the petition fee of $810, and (3) an adequate statement of unintentional delay.

Telephone inquiries concerning this decision should be directed to Alicia Kelley at (571) 272-6059.

This application is being referred to Technology Center 1793 for further examination on the merits.

/SDB/

Sherry D. Brinkley
Petitions Examiner
Office of Petitions

UNITED STATES PATENT AND TRADEMARK OFFICE

Commissioner for Patents
United States Patent and Trademark Office
P.O. Box 1450
Alexandria, VA 22313-1450
www.uspto.gov

Patent Law Office of David G. Beck
P.O. Box 1146
Mill Valley, CA 94942

COPY MAILED

AUG 0 3 2007

OFFICE OF PETITIONS

In re Application of :
Ross Alan Tessien :
Application No. 11/493,302 : DECISION ON PETITION
Filed: July 26, 2006 : TO WITHDRAW
Attorney Docket No. IMP018CP : FROM RECORD

This is a decision on the Request to Withdraw as attorney or agent of record under 37 C.F.R. § 1.36(b), filed March 20, 2007.

The request is **APPROVED**.

A grantable request to withdraw as attorney/agent of record must be signed by every attorney/agent seeking to withdraw or contain a clear indication that one attorney is signing on behalf of another/others. A request to withdraw will not be approved unless at least 30 (thirty) days would remain between the date of approval and the later of the expiration date of a time to file a response or the expiration date of the maximum time period which can be extended under 37 C.F.R. § 1.136(a).

The request was signed by David G. Beck, the sole attorney of record. David G. Beck has been withdrawn as attorney of record. Applicant is reminded that there is no attorney of record at this time.

All future correspondence will be directed to the first named inventor Ross Alan Tessien at the address indicated below

There is no outstanding Office action at this time.

Telephone inquiries concerning this decision should be directed to Terri Williams at 571-272-2991.

Terri Williams
Petitions Examiner
Office of Petitions

cc: **Ross Tessien c/o**
Impulse Devices, Inc.
13366 Grass Valley Ave., Unit H
Grass Valley, CA 95945

UNITED STATES PATENT AND TRADEMARK OFFICE

UNITED STATES DEPARTMENT OF COMMERCE
United States Patent and Trademark Office
Address: COMMISSIONER FOR PATENTS
P.O. Box 1450
Alexandria, Virginia 22313-1450
www.uspto.gov

APPLICATION NUMBER	FILING OR 371 (c) DATE	FIRST NAMED APPLICANT	ATTY. DOCKET NO./TITLE
11/493,302	07/26/2006	Ross Alan Tessien	IMP018CP

CONFIRMATION NO. 8600

Patent Law Office of David G. Beck
P.O. Box 1146
Mill Valley, CA 94942

OC000000025178158

Date Mailed: 08/03/2007

NOTICE REGARDING CHANGE OF POWER OF ATTORNEY

This is in response to the Power of Attorney filed 03/20/2007.

- The withdrawal as attorney in this application has been accepted. Future correspondence will be mailed to the new address of record. 37 CFR 1.33.

Jerri Williams

Office of Initial Patent Examination (571) 272-4000, or 1-800-PTO-9199
OFFICE COPY

UNITED STATES PATENT AND TRADEMARK OFFICE

Commissioner for Patents
United States Patent and Trademark Office
P.O. Box 1450
Alexandria, VA 22313-1450
www.uspto.gov

HOFFMANN & BARON, LLP
6900 JERICHO TURNPIKE
SYOSSET, NY 11791

MAILED

APR 16 2009

OFFICE OF PETITIONS

In re Application of :
Thomas J. Holman, et al. :
Application No. 11/493,306 : DECISION ON PETITION
Filed: July 26, 2006 : TO WITHDRAW
Attorney Docket No. 760-254 : FROM RECORD
CPAPDIV2CON2BCON5 :

This is a decision on the Request to Withdraw as attorney or agent under 37 C.F.R. § 1.36(b) filed March 19, 2009.

The request is **NOT APPROVED**.

A review of the file record indicates that Hoffmann & Baron, LLP does not have power of attorney in this patent application. See 37 C.F.R. § 10.40. Accordingly, the request to withdraw under 37 C.F.R. § 1.36(b) is not applicable.

All future communications from the Office will continue to be directed to the below-listed address until otherwise properly notified by the applicant.

Telephone inquires concerning this decision should be directed to undersigned at 571-272-1642. All other inquiries concern the examination or status of this application should be directed to the Technology Center.

/AMW/
April M. Wise
Petitions Examiner
Office of Petitions

cc: THOMAS J. HOLMAN
5621 THOMAS AVENUE SOUTH
MINNEAPOLIS, MN 55410

UNITED STATES PATENT AND TRADEMARK OFFICE

UNITED STATES DEPARTMENT OF COMMERCE
United States Patent and Trademark Office
Address: COMMISSIONER FOR PATENTS
P.O. Box 1450
Alexandria, Virginia 22313-1450
www.uspto.gov

BRIDGESTONE AMERICAS, INC.
1200 FIRESTONE PARKWAY
AKRON, OH 44317

Mail Date: 04/20/2010

Applicant	: James Richard Myers	: DECISION ON REQUEST FOR
Patent Number	: 7614630	: RECALCULATION of PATENT
Issue Date	: 11/10/2009	: TERM ADJUSTMENT IN VIEW
Appliction No	: 11/493,307	: OF WYETH AND NOTICE OF INTENT TO
Filed	: 07/26/2006	: ISSUE CERTIFICATE OF CORRECTION
		:

The Request for Recalculation is **GRANTED** to the extent indicated.

The patent term adjustment has been determined to be **434** days. The USPTO will *sua sponte* issue a certificate of correction reflecting the amount of PTA days determined by the recalculation.

Prior to the issuance of the certificate of correction, the USPTO will afford patentee an opportunity to be heard and request reconsideration. Accordingly, patentee has **one month or thirty (30) days**, whichever is longer, to file a request for reconsideration of this patent term adjustment calculation. See 35 U.S.C. 154(b)(3)(B)(ii) and 37 CFR 1.322(a)(4). No extensions of time will be granted under 37 CFR 1.136.

Patentee should use document code PET.OP if electronically filing a request for reconsideration of this patent term adjustment calculation. The patentee must also include the information required by 37 CFR 1.705(b)(2) and the fee required by 37 CFR 1.18(e). If patentee does not file a timely request for reconsideration of this patent term adjustment calculation including the information required by 37 CFR 1.705(b)(2) and the fee required by 37 CFR 1.18(e), the USPTO will issue a certificate of correction reflecting the PTA determination noted above.

Patentee should be aware that in order to preserve the right to review in the United States District Court for the District of Columbia of the USPTO patent term adjustment determination, patentee must ensure that he or she also take the steps required under 35 U.S.C. 154(b)(4)(A) in a timely manner. Nothing in the request for recalculation should be construed as providing an alternative time frame for commencing a civil action under 35 U.S.C. 154(b)(4)(A).

Any questions concerning this decision should be directed to the Office of Patent Legal Administration at 571-272-7702.

UNITED STATES PATENT AND TRADEMARK OFFICE

Commissioner for Patents
United States Patent and Trademark Office
P.O. Box 1450
Alexandria, VA 22313-1450
www.uspto.gov

CARR & FERRELL LLP
2200 GENG ROAD
PALO ALTO CA 94303

COPY MAILED

OCT 0 1 2009

OFFICE OF PETITIONS

In re Application of :
CLAR, James :
Application No. 11/493,327 : DECISION ON PETITION
Filed: July 25, 2006 : TO WITHDRAW
Attorney Docket No. **PA3887US** : FROM RECORD
:

This is a decision on the Request to Withdraw as attorney or agent of record under 37 C.F.R. § 1.36(b), filed January 06, 2009.

The request is **APPROVED**.

A grantable request to withdraw as attorney/agent of record must be signed by every attorney/agent seeking to withdraw or contain a clear indication that one attorney is signing on behalf of another/others. The Office requires the practitioner(s) requesting withdrawal to certify that he, she, or they have: (1) given reasonable notice to the client, prior to the expiration of the response period, that the practitioner(s) intends to withdraw from employment; (2) delivered to the client or a duly authorized representative of the client all papers and property (including funds) to which the client is entitled; and (3) notified the client of any responses that may be due and the time frame within which the client must respond, pursuant 37 CFR 10.40(c).

The request was signed by C. Eric Ramberg on behalf of all attorneys of record who are associated with customer No. 22830. All attorneys/agents associated have been withdrawn. Applicant is reminded that there is no attorney of record at this time.

All future correspondence will be directed to the first named inventor James Clar at the address indicated below.

There are no outstanding office actions at this time.

Telephone inquiries concerning this decision should be directed to Michelle R. Eason at 571-272-4231.

Michelle R. Eason
Paralegal Specialist
Office of Petitions

cc: **JAMES CLAR**
n57w34421 NICKELS POINT ROAD
OCONOMOWOC, WI 53066

UNITED STATES PATENT AND TRADEMARK OFFICE

COMMISSIONER FOR PATENTS
UNITED STATES PATENT AND TRADEMARK OFFICE
P.O. BOX 1450
ALEXANDRIA, VA 22313-1450
www.uspto.gov

Paper No.

KEVIN E. MC VEIGH
RHODIA INC.
CN 7500
8 CEDAR BROOK DRIVE
CRANBURY NJ 08513

COPY MAILED

AUG 26 2008

In re Application of :
Krishnamurthy :
Shanmuganandamurthy et al. : DECISION ON PETITION
Application No. 11/493,334 : PURSUANT TO
Filed: July 16, 2006 : 37 C.F.R. § 1.78(A)(6)
Attorney Docket No. RD 05012 :
Title: IMIDAZOLIDINE-2,4-DIONE :
MONOMERS, USEFUL IN MAKING
HYDANTOIN POLYMERS

This is a decision on the petition pursuant to 37 C.F.R. § 1.78(a)(6), filed July 21, 2008, to accept an unintentionally delayed claim under 35 U.S.C. § 119(e) for the benefit of the prior-filed provisional application set forth in the concurrently filed amendment to the specification.

The petition is **GRANTED**.

The fee that is associated with the filing of a request for acceptance of an unintentionally delayed claim for priority will be charged to Petitioner's Deposit Account in due course, as authorized in the petition,

A petition pursuant to 37 C.F.R. § 1.78(a)(6) is only applicable to those applications filed on or after November 29, 2000. Further, the petition is appropriate only after expiration of the period specified in 37 C.F.R. § 1.78(a)(5)(ii) and must be filed during the pendency of the nonprovisional application. In addition, the petition must be accompanied by:

(1) the reference required by 35 U.S.C. § 119(e) and 37 C.F.R. § 1.78(a)(5)(i) to the prior-filed application, unless previously submitted;
(2) the surcharge set forth in § 1.17(t); and
(3) a statement that the entire delay between the date the claim was due under 37 C.F.R. § 1.78(a)(5)(ii) and the date the claim was filed was unintentional. The Director may require additional information where there is a question whether the delay was unintentional.

Additionally, the instant nonprovisional application must be pending at the time of filing of the reference to the prior-filed provisional application as required by 37 C.F.R. § 1.78(a)(5)(ii). Further, the nonprovisional application claiming the benefit of the prior-filed provisional application must have been filed within twelve months of the filing date of the prior-filed provisional application.

All of the above requirements having been satisfied, the late claim for priority under 35 U.S.C. § 119(e) is accepted as being unintentionally delayed.

The granting of the petition to accept the delayed benefit claim to the prior-filed application under 37 CFR § 1.78(a)(6) should not be construed as meaning that this application is entitled to the benefit of the filing date of the prior-filed application. In order for this application to be entitled to the benefit of the prior-filed application, all other requirements under 35 U.S.C. § 119(e) and 37 CFR §§ 1.78(a)(4) and (a)(5) must be met. Similarly, the fact that the corrected Filing Receipt accompanying this decision on petition includes the prior-filed application should not be construed as meaning that applicant is entitled to the claim for benefit of priority to the prior-filed application noted thereon. Accordingly, the examiner will, in due course, consider this benefit claim and determine whether the application is entitled to the benefit of the earlier filing date.

A corrected Filing Receipt, which includes the priority claim to the prior-filed provisional application, accompanies this decision on petition.

The application is being forwarded to Technology Center AU 1626 for appropriate action on the amendment filed July 21, 2008, including consideration by the examiner of the claim under 35

U.S.C. § 119(e) for the benefit of priority to the prior-filed provisional application.

Telephone inquiries regarding this decision should be directed to Senior Attorney Paul Shanoski at (571) 272-3225[1]. All other inquiries concerning either the examination procedures or status of the application should be directed to the Technology Center.

Anthony Knight
Supervisor
Office of Petitions

1 Petitioner will note that all practice before the Office should be in writing, and the action of the Office will be based exclusively on the written record in the Office. See 37 C.F.R. § 1.2. As such, Petitioner is reminded that no telephone discussion may be controlling or considered authority for Petitioner's further action(s).

UNITED STATES PATENT AND TRADEMARK OFFICE

UNITED STATES DEPARTMENT OF COMMERCE
United States Patent and Trademark Office
Address: COMMISSIONER FOR PATENTS
P.O. Box 1450
Alexandria, Virginia 22313-1450
www.uspto.gov

APPLICATION NUMBER	FILING or 371(c) DATE	GRP ART UNIT	FIL FEE REC'D	ATTY.DOCKET.NO	TOT CLAIMS	IND CLAIMS
11/493,334	07/26/2006	1626	1130	RD 05012	3	3

CONFIRMATION NO. 8295

CORRECTED FILING RECEIPT

KEVIN E. MC VEIGH
RHODIA INC.
CN 7500
8 CEDAR BROOK DRIVE
CRANBURY, NJ 08513

Date Mailed: 08/26/2008

Receipt is acknowledged of this non-provisional patent application. The application will be taken up for examination in due course. Applicant will be notified as to the results of the examination. Any correspondence concerning the application must include the following identification information: the U.S. APPLICATION NUMBER, FILING DATE, NAME OF APPLICANT, and TITLE OF INVENTION. Fees transmitted by check or draft are subject to collection. Please verify the accuracy of the data presented on this receipt. **If an error is noted on this Filing Receipt, please submit a written request for a Filing Receipt Correction. Please provide a copy of this Filing Receipt with the changes noted thereon. If you received a "Notice to File Missing Parts" for this application, please submit any corrections to this Filing Receipt with your reply to the Notice. When the USPTO processes the reply to the Notice, the USPTO will generate another Filing Receipt incorporating the requested corrections**

Applicant(s)

Krishnamurthy Shanmuganandamurthy, Plainsboro, NJ;
Euen Gunn, Trenton, NJ;
Stewart Alexander Warburton, West Windsor, NJ;

Power of Attorney:
Kevin McVeigh--33017
Mialeeka Williams-Bibbs--48037

Domestic Priority data as claimed by applicant

This appln claims benefit of 60/702,440 07/26/2005

Foreign Applications

If Required, Foreign Filing License Granted: 08/11/2006

The country code and number of your priority application, to be used for filing abroad under the Paris Convention, is **US 11/493,334**

Projected Publication Date: Not Applicable

Non-Publication Request: No

Early Publication Request: No

Title

IMIDAZOLIDINE-2,4-DIONE MONOMERS, USEFUL IN MAKING HYDANTOIN POLYMERS

Preliminary Class

548

PROTECTING YOUR INVENTION OUTSIDE THE UNITED STATES

Since the rights granted by a U.S. patent extend only throughout the territory of the United States and have no effect in a foreign country, an inventor who wishes patent protection in another country must apply for a patent in a specific country or in regional patent offices. Applicants may wish to consider the filing of an international application under the Patent Cooperation Treaty (PCT). An international (PCT) application generally has the same effect as a regular national patent application in each PCT-member country. The PCT process **simplifies** the filing of patent applications on the same invention in member countries, but **does not result** in a grant of "an international patent" and does not eliminate the need of applicants to file additional documents and fees in countries where patent protection is desired.

Almost every country has its own patent law, and a person desiring a patent in a particular country must make an application for patent in that country in accordance with its particular laws. Since the laws of many countries differ in various respects from the patent law of the United States, applicants are advised to seek guidance from specific foreign countries to ensure that patent rights are not lost prematurely.

Applicants also are advised that in the case of inventions made in the United States, the Director of the USPTO must issue a license before applicants can apply for a patent in a foreign country. The filing of a U.S. patent application serves as a request for a foreign filing license. The application's filing receipt contains further information and guidance as to the status of applicant's license for foreign filing.

Applicants may wish to consult the USPTO booklet, "General Information Concerning Patents" (specifically, the section entitled "Treaties and Foreign Patents") for more information on timeframes and deadlines for filing foreign patent applications. The guide is available either by contacting the USPTO Contact Center at 800-786-9199, or it can be viewed on the USPTO website at http://www.uspto.gov/web/offices/pac/doc/general/index.html.

For information on preventing theft of your intellectual property (patents, trademarks and copyrights), you may wish to consult the U.S. Government website, http://www.stopfakes.gov. Part of a Department of Commerce initiative, this website includes self-help "toolkits" giving innovators guidance on how to protect intellectual property in specific countries such as China, Korea and Mexico. For questions regarding patent enforcement issues, applicants may call the U.S. Government hotline at 1-866-999-HALT (1-866-999-4158).

LICENSE FOR FOREIGN FILING UNDER

Title 35, United States Code, Section 184

Title 37, Code of Federal Regulations, 5.11 & 5.15

GRANTED

The applicant has been granted a license under 35 U.S.C. 184, if the phrase "IF REQUIRED, FOREIGN FILING LICENSE GRANTED" followed by a date appears on this form. Such licenses are issued in all applications where the conditions for issuance of a license have been met, regardless of whether or not a license may be required as

set forth in 37 CFR 5.15. The scope and limitations of this license are set forth in 37 CFR 5.15(a) unless an earlier license has been issued under 37 CFR 5.15(b). The license is subject to revocation upon written notification. The date indicated is the effective date of the license, unless an earlier license of similar scope has been granted under 37 CFR 5.13 or 5.14.

This license is to be retained by the licensee and may be used at any time on or after the effective date thereof unless it is revoked. This license is automatically transferred to any related applications(s) filed under 37 CFR 1.53(d). This license is not retroactive.

The grant of a license does not in any way lessen the responsibility of a licensee for the security of the subject matter as imposed by any Government contract or the provisions of existing laws relating to espionage and the national security or the export of technical data. Licensees should apprise themselves of current regulations especially with respect to certain countries, of other agencies, particularly the Office of Defense Trade Controls, Department of State (with respect to Arms, Munitions and Implements of War (22 CFR 121-128)); the Bureau of Industry and Security, Department of Commerce (15 CFR parts 730-774); the Office of Foreign AssetsControl, Department of Treasury (31 CFR Parts 500+) and the Department of Energy.

NOT GRANTED

No license under 35 U.S.C. 184 has been granted at this time, if the phrase "IF REQUIRED, FOREIGN FILING LICENSE GRANTED" DOES NOT appear on this form. Applicant may still petition for a license under 37 CFR 5.12, if a license is desired before the expiration of 6 months from the filing date of the application. If 6 months has lapsed from the filing date of this application and the licensee has not received any indication of a secrecy order under 35 U.S.C. 181, the licensee may foreign file the application pursuant to 37 CFR 5.15(b).

UNITED STATES PATENT AND TRADEMARK OFFICE

Commissioner for Patents
United States Patent and Trademark Office
P.O. Box 1450
Alexandria, VA 22313-1450
www.uspto.gov

VAN PELT, YI & JAMES LLP
10050 N. FOOTHILL BLVD #200
CUPERTINO CA 95014

COPY MAILED

JUN 0 1 2007

OFFICE OF PETITIONS

In re Application of :
Anatoli Stein et al. :
Application No. 11/493,353 :
Filed: July 25, 2006 :
Attorney Docket No. GUZIP004 :

DECISION ON PETITION
TO MAKE SPECIAL UNDER
37 CFR 1.102(c)(1)

This is a decision on the petition under 37 CFR 1.102(c)(1), filed January 22, 2007, to make the above-identified application special based on applicant's age as set forth in M.P.E.P. § 708.02, Section IV.

The petition is **GRANTED**.

A grantable petition to make an application special under 37 CFR 1.102(c)(1) and MPEP § 708.02, Section IV: Applicant's Age must be accompanied by evidence showing that at least one of the applicants is 65 years of age, or more, such as a birth certificate or a statement by applicant. No fee is required

The instant petition includes a copy of the applicant's passports and a statement from the applicants declaring that they are 65 years of age or older. Accordingly, the above-identified application has been accorded "special" status.

Telephone inquiries concerning this decision should be directed to Terri Williams at 571-272-2991.

All other inquiries concerning either the examination or status of the application should be directed to the Technology Center.

The application is being forwarded to the Technology Center Art Unit 2819 for action on the merits commensurate with this decision.

Terri Williams
Petitions Examiner
Office of Petitions

UNITED STATES PATENT AND TRADEMARK OFFICE

Commissioner for Patents
United States Patent and Trademark Office
P.O. Box 1450
Alexandria, VA 22313-1450
www.uspto.gov

JONES DAY
500 GRANT STREET
SUITE 3100
PITTSBURGH, PA 15219-2502

COPY MAILED

MAY 10 2007

OFFICE OF PETITIONS

In re Application of :
Ben Ba :
Application No. 11/493,354 : DECISION GRANTING
Filed: July 26, 2006 : PETITION
Attorney Docket No. PAT001150-002 :

This is a decision on the petition, filed October 19, 2006, requesting that the above-identified application be accorded a filing date of July 26, 2006, rather than the presently accorded date of July 25, 2006. The petition is properly treated as a petition under 37 CFR 1.10(c).

Petitioner alleges that the application was deposited in Express Mail service on July 26, 2006. In support of this allegation, petitioner has submitted a copy of Express Mail label receipt number EO 923 191 532 US, which bears a hand-written "date-in" of July 26, 2006, as well as a U.S. Postal Service (USPS) date stamp of July 26, 2006. Additional evidence in support of the allegation that the Express Mail package in question was deposited on July 26, 2006 includes a copy of the results from the USPS Express Mail Track and Confirm database, which shows that the package at issue was accepted at the Pittsburgh, PA, USPS at 3:21 pm. Petitioner is alleging that the date indicated on the stamped return postcard, Filing Receipt and Notice to File Missing Parts of Nonprovisional Application is incorrect and that the correct date is July 26, 2006. The above-noted Express Mail number appears on the originally filed application papers of this file.

The Office considers the date the paper or fee is shown to have been deposited as "Express Mail" to be the "date-in" on the Express Mail label; MPEP 513. The evidence is convincing that the application was deposited as "Express Mail" with the U. S. Postal Service on July 26, 2006.

In view of the above, the petition is **GRANTED**.

This application file is being referred to the Office of Initial Patent Examination (OIPE) for correction of the filing date to July 26, 2006 and for issuance of a corrected filing receipt.

Telephone inquiries relating to this decision should be directed Irvin Dingle at (571) 272-3210. Telephone inquiries related to OIPE processing should be directed to their hotline at (571) 272-4100.

Frances Hicks
Petition Examiner
Office of Petitions

UNITED STATES PATENT AND TRADEMARK OFFICE

Commissioner for Patents
United States Patent and Trademark Office
P.O. Box 1450
Alexandria, VA 22313-1450
www.uspto.gov

Xenoport, Inc.
3410 Central Expressway
Santa Clara CA 95051

COPY MAILED
MAR 12 2010

In re Application of :
NOA ZERANGUE :
Application No. 11/493,371 : ON APPLICATION FOR
Filed: July 25, 2006 : PATENT TERM ADJUSTMENT
Atty. Docket No. X-0100 R1 :

This is in response to the DETERMINATION OF PATENT TERM ADJUSTMENT UNDER 37 C.F.R. § 1.705(b) filed January 14, 2010. Applicants submit that the correct patent term adjustment to be indicated on the patent is four hundred ninety-eight days (498), not three hundred forty (340) days as calculated by the Office as of the mailing of the initial determination of patent term adjustment. Applicants seek this correction solely on the basis that the Office will take in excess of three years to issue this patent.

As the instant application for patent term adjustment requests reconsideration of the patent term adjustment as it relates to the Office's failure to issue the patent within three years of the filing date, the application for patent term adjustment under 37 CFR 1.705(b) is **DISMISSED as PREMATURE**.

Knowledge of the actual date the patent issues is required to calculate the amount, if any, of additional patent term patentees are entitled to for Office failure to issue the patent within three years. See 37 CFR 1.702(b). (This is true even where a request for continued examination (RCE) was filed). The computer will not undertake the § 1.702(b) calculation until the actual date of issuance of the patent has been determined. Likewise, the computer will not calculate any further Office delay under 37 CFR 1.702(a)(4) or applicant delay under 37 CFR

1.704(c)(10) until the actual date of issuance of the patent has been determined. As such, the Office cannot make a determination on the correctness of the patent term adjustment until the patent has issued.

Requesting reconsideration of the patent term adjustment to be indicated on the patent under 37 CFR 1.705(b) based on the initial determination of patent term adjustment and a projected issuance date of the patent (or even the filing date of the request for continued examination) is premature. Accordingly, it is appropriate to dismiss such a request as premature.

Rather than file an application for patent term adjustment under 37 CFR 1.705(b) contesting the 37 CFR 1.702(b) calculation at the time of the mailing of the notice of allowance, applicants are advised that they may wait until the time of the issuance of the patent and file a request for reconsideration of the patent term adjustment pursuant to 37 CFR 1.705(d). As the USPTO does not calculate the amount of time earned pursuant to 37 CFR 1.702(b) until the time of the issuance of the patent, the Office will consider any request for reconsideration of the patent term adjustment due to an error in the calculation of 37 CFR 1.702(b) to be timely if the request for reconsideration is filed within two months of the issuance of the patent. However, as to all other bases for contesting the initial determination of patent term adjustment received with the notice of allowance, applicants must timely file an application for patent term adjustment prior to the payment of the issue fee.[1]

The Office acknowledges submission of the $200.00 fee set forth in 37 CFR 1.18(e) for consideration of the application for patent term adjustment under 37 CFR 1.705(b).

---

[1] For example, if applicants dispute both the calculation of patent term adjustment under 37 CFR 1.702(a)(1) for Office failure to mail a first Office action or notice of allowance not later than fourteen months after the date on which the application was filed, and under 37 CFR 1.702(b) for Office failure to issue a patent within three years of the actual filing date of the application, then applicants must still timely file an application for patent term adjustment prior to the payment of the issue fee to contest the calculation of Office delay in issuing a first Office action or notice of allowance. See 37 CFR 1.705(b) and 35 U.S.C. 154(b)(3)(B). A dispute as to the calculation of the § 1.702(a)(1) period raised on request for reconsideration of patent term adjustment under 37 CFR 1.705(d) will be dismissed as untimely filed.

Any request for reconsideration of the patent term adjustment indicated on the patent must be timely filed within two months after issuance pursuant to 37 CFR 1.705(d) and must include payment of the required fee under 37 CFR 1.18(e).

The Office of Data Management has been advised of this decision. This application is being referred to the Office of Data Management for issuance of the patent.

Telephone inquiries specific to this decision should be directed to the undersigned at (571) 272-3211.

Christina Tartera Donnell

Christina Tartera Donnell
Senior Petitions Attorney
Office of Petitions

UNITED STATES PATENT AND TRADEMARK OFFICE

Commissioner for Patents
United States Patent and Trademark Office
P.O. Box 1450
Alexandria, VA 22313-1450
www.uspto.gov

TOWNSEND AND TOWNSEND AND CREW, LLP
TWO EMBARCADERO CENTER
EIGHTH FLOOR
SAN FRANCISCO CA 94111-3834

COPY MAILED

MAR 12 2007

OFFICE OF PETITIONS

In re Application of :
Gibson et al. :
Application No. 11/493,380 : DECISION ON PETITION
Filed: July 25, 2006 : TO MAKE SPECIAL UNDER
Attorney Docket No. 025902-000320US : 37 CFR 1.102(c)(2)
:

This is a decision on the petition under 37 CFR 1.102(c)(2)(ii), filed August 25, 2006, to make the above-identified application special based on the invention materially contributing to certain categories related to energy resource as set forth in M.P.E.P. § 708.02, Section VI.

The petitions are **DISMISSED**.

A grantable petition to make an application special under 37 CFR 1.102(c)(2)(ii) and MPEP § 708.02, Section VI: Energy, must state that special status is sought because the invention materially contributes to (A) the discovery or development of energy resources, or (B) the more efficient utilization and conservation of energy resources. Examples of inventions in category (A) would be developments in fossil fuels (natural gas, coal, and petroleum), hydrogen fuel technologies, nuclear energy, solar energy, etc. Category (B) would include inventions relating to the reduction of energy consumption in combustion systems, industrial equipment, household appliances, etc. If the application disclosure is not clear on its face that the claimed invention materially contributes to category (A) or (B), the petition must be accompanied by a statement under 37 CFR 1.102 by the applicant, assignee, or an attorney/agent registered to practice before the Office explaining how the materiality standard is met. No fee is required.

The instant petition, fails to meet the materiality standard of 37 CFR 102(c)(2)(ii). Although the disclosure may be generally directed to a method and system for manufacturing a solar cell, the materiality standard of the rule has not been met, i.e., petitioner has failed to state how the claimed invention contributes in a significant, substantial, or noticeable manner to the conservation of energy resources. Therefore, the issue is not whether petitioner's solar cells are more cost effective or in general more energy efficient but rather how petitioner's inventions would contribute in a significant manner to the conservation of energy resources. Accordingly, it is unclear as to how the claimed invention would contribute in a significant manner to the development or conservation of energy resources.

This lack of meeting the materiality standards of 37 CFR 102(c)(2) (i) and (ii) does not permit the applicant to enjoy the benefit of advanced examination.

There is no fee required for the filed petition. The $130 payment that accompanied the petition will be refunded to deposit account 20-1430.

Further correspondence with respect to this matter should be addressed as follows:

By Mail: Mail Stop PETITION
Commissioner for Patents
P. O. Box 1450
Alexandria, VA 22313-1450

By hand: U. S. Patent and Trademark Office
Customer Service Window, Mail Stop Petitions
Randolph Building
401 Dulany Street
Alexandria, VA 22314

By FAX: (571) 273-8300

Telephone inquiries concerning this decision should be directed to Jefferey Harold at 571-272-7519, or to the undersigned at 571-272-7099.

All other inquiries concerning either the examination or status of the application should be directed to the Technology Center.

The application is being forwarded to the Technology Center Art Unit 3618 for action in its regular turn.

David Bucci
Petitions Examiner
Office of Petitions

UNITED STATES PATENT AND TRADEMARK OFFICE

Commissioner for Patents
United States Patent and Trademark Office
P.O. Box 1450
Alexandria, VA 22313-1450
www.uspto.gov

TOWNSEND AND TOWNSEND AND CREW, LLP
TWO EMBARCADERO CENTER
EIGHTH FLOOR
SAN FRANCISCO CA 94111-3834

COPY MAILED

MAR 12 2007

OFFICE OF PETITIONS

In re Application of :
Gibson et al. :
Application No. 11/493,380 : DECISION ON PETITION
Filed: July 25, 2006 : TO MAKE SPECIAL UNDER
Attorney Docket No. 025902-000320US : 37 CFR 1.102(c)(2)
:

This is a decision on the petition under 37 CFR 1.102(c)(2)(ii), filed August 25, 2006, to make the above-identified application special based on the invention materially contributing to certain categories related to energy resource as set forth in M.P.E.P. § 708.02, Section VI.

The petitions are **DISMISSED**.

A grantable petition to make an application special under 37 CFR 1.102(c)(2)(ii) and MPEP § 708.02, Section VI: Energy, must state that special status is sought because the invention materially contributes to (A) the discovery or development of energy resources, or (B) the more efficient utilization and conservation of energy resources. Examples of inventions in category (A) would be developments in fossil fuels (natural gas, coal, and petroleum), hydrogen fuel technologies, nuclear energy, solar energy, etc. Category (B) would include inventions relating to the reduction of energy consumption in combustion systems, industrial equipment, household appliances, etc. If the application disclosure is not clear on its face that the claimed invention materially contributes to category (A) or (B), the petition must be accompanied by a statement under 37 CFR 1.102 by the applicant, assignee, or an attorney/agent registered to practice before the Office explaining how the materiality standard is met. No fee is required.

The instant petition, fails to meet the materiality standard of 37 CFR 102(c)(2)(ii). Although the disclosure may be generally directed to a method and system for manufacturing a solar cell, the materiality standard of the rule has not been met, i.e., petitioner has failed to state how the claimed invention contributes in a significant, substantial, or noticeable manner to the conservation of energy resources. Therefore, the issue is not whether petitioner's solar cells are more cost effective or in general more energy efficient but rather how petitioner's inventions would contribute in a significant manner to the conservation of energy resources. Accordingly, it is unclear as to how the claimed invention would contribute in a significant manner to the development or conservation of energy resources.

This lack of meeting the materiality standards of 37 CFR 102(c)(2) (i) and (ii) does not permit the applicant to enjoy the benefit of advanced examination.

There is no fee required for the filed petition. The $130 payment that accompanied the petition will be refunded to deposit account 20-1430.

Further correspondence with respect to this matter should be addressed as follows:

By Mail: Mail Stop PETITION
Commissioner for Patents
P. O. Box 1450
Alexandria, VA 22313-1450

By hand: U. S. Patent and Trademark Office
Customer Service Window, Mail Stop Petitions
Randolph Building
401 Dulany Street
Alexandria, VA 22314

By FAX: (571) 273-8300

Telephone inquiries concerning this decision should be directed to Jefferey Harold at 571-272-7519, or to the undersigned at 571-272-7099.

All other inquiries concerning either the examination or status of the application should be directed to the Technology Center.

The application is being forwarded to the Technology Center Art Unit 3618 for action in its regular turn.

David Bucci
Petitions Examiner
Office of Petitions

UNITED STATES PATENT AND TRADEMARK OFFICE

UNITED STATES DEPARTMENT OF COMMERCE
United States Patent and Trademark Office
Address: COMMISSIONER FOR PATENTS
P.O. Box 1450
Alexandria, Virginia 22313-1450
www.uspto.gov

Tyco Healthcare Group LP
60 MIDDLETOWN AVENUE
NORTH HAVEN, CT 06473

Mail Date: 04/21/2010

Applicant	: Mani Prakash	: DECISION ON REQUEST FOR
Patent Number	: 7594313	: RECALCULATION of PATENT
Issue Date	: 09/29/2009	: TERM ADJUSTMENT IN VIEW
Appliction No	: 11/493,393	: OF WYETH AND NOTICE OF INTENT TO
Filed	: 07/26/2006	: ISSUE CERTIFICATE OF CORRECTION
		:

The Request for Recalculation is **GRANTED** to the extent indicated.

The patent term adjustment has been determined to be **435** days. The USPTO will *sua sponte* issue a certificate of correction reflecting the amount of PTA days determined by the recalculation.

Prior to the issuance of the certificate of correction, the USPTO will afford patentee an opportunity to be heard and request reconsideration. Accordingly, patentee has **one month or thirty (30) days**, whichever is longer, to file a request for reconsideration of this patent term adjustment calculation. See 35 U.S.C. 154(b)(3)(B)(ii) and 37 CFR 1.322(a)(4). No extensions of time will be granted under 37 CFR 1.136.

Patentee should use document code PET.OP if electronically filing a request for reconsideration of this patent term adjustment calculation. The patentee must also include the information required by 37 CFR 1.705(b)(2) and the fee required by 37 CFR 1.18(e). If patentee does not file a timely request for reconsideration of this patent term adjustment calculation including the information required by 37 CFR 1.705(b)(2) and the fee required by 37 CFR 1.18(e), the USPTO will issue a certificate of correction reflecting the PTA determination noted above.

Patentee should be aware that in order to preserve the right to review in the United States District Court for the District of Columbia of the USPTO patent term adjustment determination, patentee must ensure that he or she also take the steps required under 35 U.S.C. 154(b)(4)(A) in a timely manner. Nothing in the request for recalculation should be construed as providing an alternative time frame for commencing a civil action under 35 U.S.C. 154(b)(4)(A).

Any questions concerning this decision should be directed to the Office of Patent Legal Administration at 571-272-7702.

UNITED STATES PATENT AND TRADEMARK OFFICE

COMMISSIONER FOR PATENTS
UNITED STATES PATENT AND TRADEMARK OFFICE
P.O. BOX 1450
ALEXANDRIA, VA 22313-1450
www.uspto.gov

Paper No.

KEVIN E. MC VEIGH
RHODIA INC.
CN 7500
8 CEDAR BROOK DRIVE
CRANBURY NJ 08512

COPY MAILED

AUG 25 2008

OFFICE OF PETITIONS

In re Application of	:	
Gabriella Cristobal-Lumbroso et al.	:	DECISION ON PETITION
Application No. 11/493,420	:	PURSUANT TO
Filed: July 26, 2006	:	37 C.F.R. § 1.78(A)(6)
Attorney Docket No. RD 05013	:	
Title: POLYMERS WITH PENDANT POLY(ALKYLENEOXY) SUBSTITUENT GROUPS AND THEIR USE IN PERSONAL CARE APPLICATIONS	:	

This is a decision on the petition pursuant to 37 C.F.R. § 1.78(a)(6), filed July 21, 2008, to accept an unintentionally delayed claim under 35 U.S.C. § 119(e) for the benefit of the prior-filed provisional application set forth in the concurrently filed amendment to the specification.

The petition is **DISMISSED AS MOOT**.

The petition is accompanied by an amendment to the first sentence of the specification following the title to include a reference to the prior-filed applications. While a reference to the prior-filed nonprovisional and provisional applications was not included in an Application Data Sheet (ADS) or in the first sentence of the specification following the title as required by the rules, a reference, nevertheless, was made in the declaration filed with the application.

Where a claim for priority under 37 C.F.R. § 1.78(a)(6) is not included in the first sentence of the specification or in an ADS

but does appear either in the oath or declaration or a transmittal letter filed with the application and the Office notes the claim for priority, no petition will be required to accept a late claim for priority. This is because the application would have been scheduled for publication on the basis of the information concerning the claim submitted elsewhere in the application within the time period set forth in 37 C.F.R. §§ 1.78(a)(2)(ii) and 1.78(a)(5)(ii). On the other hand, if the USPTO does not note the claim for priority to the prior-filed applications set forth in the oath or declaration or transmittal letter submitted with the application, a petition will be required to accept a late claim for priority under 37 C.F.R. §§ 1.78(a)(3) and 1.78(a)(6).[1] In the present case, the Office noted the claim for priority to the prior-filed applications in the transmittal letter filed with the application, as shown by their inclusion on the filing receipt.

In view of the above, the petition fee is unnecessary and has not been charged to Petitioner's Deposit Account.

The application is being forwarded to Technology Center AU 4171 for appropriate action on the amendment filed July 21, 2008, including consideration by the examiner of the claim under 35 U.S.C. § 119(e) for the benefit of priority to the prior-filed provisional application.

Telephone inquiries regarding this decision should be directed to Senior Attorney Paul Shanoski at (571) 272-3225[2]. All other inquiries concerning either the examination procedures or status of the application should be directed to the Technology Center.

Anthony Knight
Supervisor
Office of Petitions

---

1 *Note* MPEP § 201.11 (III)(D) and 66 Federal Register 67087 at 67089 (Dec. 28, 2001), effective December 28, 2001.

2 Petitioner will note that all practice before the Office should be in writing, and the action of the Office will be based exclusively on the written record in the Office. See 37 C.F.R. § 1.2. As such, Petitioner is reminded that no telephone discussion may be controlling or considered authority for Petitioner's further action(s).

UNITED STATES PATENT AND TRADEMARK OFFICE

UNITED STATES DEPARTMENT OF COMMERCE
United States Patent and Trademark Office
Address: COMMISSIONER FOR PATENTS
P.O. Box 1450
Alexandria, Virginia 22313-1450
www.uspto.gov

APPLICATION NO.	FILING DATE	FIRST NAMED INVENTOR	ATTORNEY DOCKET NO.	CONFIRMATION NO.
11/493,449	07/26/2006	Jong-Hyung Kwun	1235-130	8508

7590 12/03/2008

THE FARRELL LAW FIRM, P.C.
333 EARLE OVINGTON BOULEVARD
SUITE 701
UNIONDALE, NY 11553

EXAMINER	
TROST IV, WILLIAM GEORGE	

ART UNIT	PAPER NUMBER
2416	

MAIL DATE	DELIVERY MODE
12/03/2008	PAPER

DECISION GRANTING PETITION UNDER 37 CFR 1.138(d)

The declaration of express abandonment is recognized

This is in response to the petition under 37 CFR 1.138(d), requesting for a refund of any previously paid search fee and excess claims fee in the above-identified application.

The petition is granted.

The express abandonment is recognized. Any previously paid search fee and excess claims fee are hereby refunded.

Telephone inquiries should be directed to the Office of Data Management at (571) 272-4200.

Patent Publication Branch
Office of Data Management

Refund Ref:
12/04/2008 NFARMER 0000165362

CHECK Refund Total: $1600.00

Adjustment date: 12/04/2008 NFARMER
07728/2006 HGUTEMA1 00000045 11493449
02 FC:1111 -500.00 OP
04 FC:1201 -600.00 OP
05 FC:1202 -500.00 OP