UNITED STATES PATENT AND TRADEMARK OFFICE

COMMISSIONER FOR PATENTS
UNITED STATES PATENT AND TRADEMARK OFFICE
P.O. BOX 1450
ALEXANDRIA, VA 22313-1450
www.uspto.gov

06 DEC 2006

Charles D. Lucina
The Weintraub Group, P.L.C.
3200 Northwestern Highway, Suite 240
Farmington Hills, Michigan 48334

In re Application of:	:	
Gilgallon et al.	:	
Application No.: 11/578,174	:	DECISION ON PETITION
PCT Application No.: PCT/US05/11900	:	UNDER 37 CFR 1.137(b)
Int. Filing Date: 8 April 2005	:	
Priority Date Claimed: 8 April 2004		
Attorney Docket No.: GMS-101-A-PCT-US		
For: Motorcycle Gear Shift Control		

This is in response to Applicants' "Petition for Revival of an International Application for Patent Designating the U.S. Abandoned Unintentionally under 37 CFR 1.137(b)" filed 11 October 2006.

BACKGROUND

On 8 April 2005, Applicants filed international application PCT/US05/11900, which claimed a priority of an earlier application from the United States filed on 8 April 2004. The thirty-month period for paying the basic national fee in the United States expired at midnight on 8 October 2006.

International application PCT/US05/11900 became abandoned as to the United States for failure to timely pay the basic national fee.

On 11 October 2006, applicants filed the present petition under 37 CFR 1.137(b).

DISCUSSION

A petition to revive an abandoned application under 37 CFR 1.137(b) must be filed without intentional delay from the time the application became abandoned and/or

applicant first became aware of the abandoned status of the application. A petition under 37 CFR 1.137(b) must be accompanied by (1) the required reply, (2) the petition as set forth in 37 CFR 1.17(m), (3) a statement that the entire delay in filing the required reply from the due date for the reply until the filing of a grantable petition was unintentional, and (4) a terminal disclaimer and fee (if the international application was filed prior to June 8, 1995).

With regard to Item (1), applicants have provided the required reply under 35 U.S.C. 371. A copy of the international application and the basic national fee has been filed in the United States Receiving Office (RO/US).

With regard to Item (2), the appropriate petition fee of $1500 as required by 37 CFR 1.17(m) has been paid.

With regard to Item (3), Applicants' statement that "[t]he entire delay in filing the required reply from the due date for the required reply until the filing of a grantable petition under 37 CFR 1.137(b) was unintentional" has been satisfied.

With regard to Item (4), a terminal disclaimer is not required since this application was filed after 08 June 1995.

CONCLUSION

For the reason set forth above, the petition to revive the international application abandoned under 37 CFR 1.137(b) is **GRANTED** as to the National Stage in the United States of America, and will be processed, under 35 U.S.C. 371, as application number **11/578,174**, at this time.

The application has an international filing date of 24 September 2003, under 35 U.S.C. 363, and a 35 U.S.C. 371(c)(1), (2) and (4) date of 11 October 2006.

Application number **11/578,174** is being forwarded to the National Stage Processing Division of the Office of PCT Operations for further processing in accordance with this decision.

Taofiq A. Solola, PhD. JD.
PCT Legal Administration
Telephone: 571-272-6094
Facsimile: 571-272-0459

Richard Cole
PCT Legal Examiner
Office of PCT Legal Administration

UNITED STATES PATENT AND TRADEMARK OFFICE

Commissioner for Patents
United States Patent and Trademark Office
P.O. Box 1450
Alexandria, VA 22313-1450
www.uspto.gov

GREER BURNS & CRAIN
300 S WACKER DR
25TH FLOOR
CHICAGO IL 60606

COPY MAILED

APR 28 2008

OFFICE OF PETITIONS

In re Application of	:	
Wakabayashi, et al.	:	
Application No. 11/578,204	:	ON PETITION
Filed: October 10, 2006	:	
Attorney Docket No. 4386.76684	:	

This is a decision on the petition under 37 CFR 1.10(c), filed July 23, 2007, to accord the above application a filing date of October 10, 2006.

The petition is **GRANTED**.

Petitioner argues that the above-identified application was filed on October 10, 2006, not October 11, 2006. In support thereof, petitioner has included a copy of the Express Mail mailing label for Express mail number EL 965124675 US. The Express Mail mailing label contains a "date in" entry of October 10, 2006.

37 CFR 1.10(c) states that any person filing correspondence under 37 CFR 1.10, who can show that there is a discrepancy between the filing date accorded by the Office and the date of deposit as shown by the "date-in" on the Express Mail mailing label may petition the Commissioner to accord the correspondence a filing date as of the "date-in" on the Express Mail mailing label, provided:

(1) The petition is filed promptly after the person becomes aware that the Office has accorded, or will accord, a filing date based upon an incorrect entry by the USPS;

(2) The number of the "Express Mail" mailing label was placed on the paper(s)or fee(s) that constitute the correspondence prior to the original mailing by "Express Mail"; and

(3) The petition includes a true copy of the "Express Mail" mailing label showing the "date-in", and of any other official notation by the USPS relied upon to show the date of deposit.

Petitioner has fulfilled requirements (1), (2), and (3) above. The Express Mail mailing label bears a "date-in" entry of October 10, 2006.

Given the basis for granting this petition, no petition fee was required, and none has been charged.

The matter is being forwarded to the Office of Patent Application Processing for further processing with a filing date of **October 10, 2006, not October 11, 2006.**

Telephone inquiries concerning this decision should be directed to the undersigned at (571)272-3207.

Cliff Congo
Petitions Attorney
Office of Petitions

UNITED STATES PATENT AND TRADEMARK OFFICE

Commissioner for Patents
United States Patent and Trademark Office
P.O. Box 1450
Alexandria, VA 22313-1450
www.uspto.gov

ARENT FOX LLP
1050 CONNECTICUT AVENUE, N.W.
SUITE 400
WASHINGTON DC 20036

MAILED

JUL 21 2009

OFFICE OF PETITIONS

In re Application of
Farnham, et al.
Application No. 11/578,226
Filed: October 11, 2006
Atty. Dkt. No: 100519-00025

: DECISION ON PETITION

This decision is in response to the petition to withdraw the holding of abandonment under 37 CFR 1.181 filed January 30, 2009.

The petition under 37 CFR 1.181 to withdraw the holding of abandonment is hereby **GRANTED**.

The application was held abandoned for failure to timely submit a proper reply to the non-final Office action mailed June 23, 2008. The non-final Office action set a three month shortened statutory period of time for reply. This decision precedes mailing of Notice of Abandonment.

Petitioners assert non-receipt of the non-final Office action. Petitioners attribute the non-receipt of the non-final Office to the Office's failure to mail the non-final Office action to the correct correspondence address. Petitioner asserts that on January 22, 2008, a change of correspondence address was submitted.

Petitioners arguments have been carefully considered and found convincing. Petitioners have established that due care was taken to adhere to the requirement for prompt notification in each concerned application of the change of address in accordance with MPEP § 601.03.

A review of the record reveals that the change of correspondence address submitted January 22, 2008 was not entered into the record. As a result, the non-final Office action was mailed to the incorrect correspondence address on June 23, 2008.

This application is being forwarded to Technology Center 1700 for re-mailing of the non-final Office action. The period for reply will be set by the newly mailed non-final Office action.

Telephone inquiries concerning this matter may be directed to the undersigned at (571) 272-3205.

Alesia M. Brown
Petitions Attorney
Office of Petitions

UNITED STATES PATENT AND TRADEMARK OFFICE

Commissioner for Patents
United States Patent and Trademark Office
P.O. Box 1450
Alexandria, VA 22313-1450
www.uspto.gov

HARNESS, DICKEY & PIERCE, P.L.C.
P.O. BOX 8910
RESTON, VA 20195

COPY MAILED

APR 15 2008

OFFICE OF PETITIONS

In re Application of

KAKIHIRA, Hiroshi et al.
Application No. 11/578,243
Filed: October 12, 2006
Attorney Docket No. **25613-000013/US**

DECISION ON PETITION
TO WITHDRAW
FROM RECORD

This is a decision on the Request to Withdraw as attorney or agent of record under 37 C.F.R. § 1.36(b), filed February 20, 2008.

The request is **NOT APPROVED**.

A grantable request to withdraw as attorney/agent of record must be signed by every attorney/agent seeking to withdraw or contain a clear indication that one attorney is signing on behalf of another/others. A request to withdraw will not be approved unless at least 30 (thirty) days would remain between the date of approval and the later of the expiration date of a time to file a response or the expiration date of the maximum time period which can be extended under 37 C.F.R. § 1.136(a).

The request cannot be approved because no reasons for withdrawal have been provided. The Office cannot, at this time, determine whether practitioner's request is one of the mandatory or permissive reasons enumerated in 37 CFR 10.40. Any subsequent requests must include reasons for withdrawal. Please note that there is a space provided for on PTO/SB/83 (Request to Withdraw as Attorney or Agent) to supply practitioner's reasons.

All future communications from the Office will continue to be directed to the above-listed address until otherwise notified by applicant.

Telephone inquiries concerning this decision should be directed to the undersigned at 571-272- 4231.

Michelle R. Eason

Michelle R. Eason
Paralegal Specialist
Office of Petitions

cc: **MR. ANTHONY M. ZUPCIC**
FITZPATRICK, CELLA, HARPER & SCINTO
30 ROCKEFELLER PLAZA
NEW YORK, NY 10112

UNITED STATES PATENT AND TRADEMARK OFFICE

Commissioner for Patents
United States Patent and Trademark Office
P.O. Box 1450
Alexandria, VA 22313-1450
www.uspto.gov

HARNESS, DICKEY & PIERCE, P.L.C.
P.O. BOX 8910
RESTON, VA 20195

COPY MAILED

JUN 09 2008

In re Application of	:	
KAKIHIRA, Hiroshi et al.	:	
Application No. 11/578,243	:	DECISION ON PETITION
Filed: October 12, 2006	:	TO WITHDRAW
Attorney Docket No. **25613-000013/US**	:	FROM RECORD
	:	

This is a decision on the renewed Request to Withdraw as attorney or agent of record under 37 C.F.R. § 1.36(b), filed April 28, 2008.

The request is **APPROVED.**

A grantable request to withdraw as attorney/agent of record must be signed by every attorney/agent seeking to withdraw or contain a clear indication that one attorney is signing on behalf of another/others. A request to withdraw will not be approved unless at least 30 (thirty) days would remain between the date of approval and the later of the expiration date of a time to file a response or the expiration date of the maximum time period which can be extended under 37 C.F.R. § 1.136(a).

The request was signed by John A. Castellano on behalf of all attorneys of record. All attorneys/agents associated have been withdrawn. Applicant is reminded that there is no attorney of record at this time.

The request to change the correspondence address of record is not acceptable as the requested correspondence address is not that of: (1) the first named signing inventor; or (2) an intervening assignee of the entire interest under 37 C.F.R 3.71. All future communications from the Office will be directed to the first named signing inventor.

There are no outstanding office actions at this time.

Telephone inquiries concerning this decision should be directed to Michelle R. Eason at 571-272-4231.

Michelle R. Eason
Paralegal Specialist
Office of Petitions

cc: **HIROSHI KAKIHIRA**
c/o CANON FINETECH INC.
5540-11 SAKATEMACHI, JOSO-SHI
IBARAKI, JAPAN 303-8503

cc: **MR. ANTHONY M. ZUPCIC**
FITZPATRICK, CELLA, HARPER & SCINTO
30 W ROCKEFELLER PLAZA
NEW YORK, NY 10112

UNITED STATES PATENT AND TRADEMARK OFFICE

Commissioner for Patents
United States Patent and Trademark Office
P.O. Box 1450
Alexandria, VA 22313-1450
www.uspto.gov

02 AUG 2007

Kraton Polymers U.S.
3333 Highway 6 South
Rm. CA-108
Houston TX 77082

In re Application of	:	
KORENSTRA, Jan et al.	:	
Application No.: 11/578,260	:	DECISION
PCT No.: PCT/EP2005/051593	:	
Int. Filing Date: 11 April 2005	:	ON PETITION UNDER
Priority Date: 14 April 2004	:	
Docket No.: A0009/US	:	37 CFR 1.137(b)
For: A POLYMER MODIFIED ... OR ROOFING	:	
COMPOSITIONS	:	

Applicants' Petition to Revive Under 37 CFR §1.137(b), filed in the above-captioned application on 23 May 2007 is **GRANTED**.

Applicants indicate that the entire delay in filing the required reply from the due date for the required reply until the filing of a grantable petition under 37 CFR 1.137(b) was unintentional, as required by 37 CFR 1.137(b)(3). The appropriate national fee and petition fee have been submitted. A terminal disclaimer is not required as the application was filed on or after 08 June 1995. Accordingly, all requirements under 37 CFR 1.137(b) have been satisfied.

A signed oath or declaration has not yet been submitted. The fee for late filing of the search fee, examination fee or oath or declaration has been paid.

This application is being referred to the National Stage Processing Branch of the Office of PCT Operations for continued processing in accordance with this decision, including the mailing of a Notification of Missing Requirements (Form PCT/DO/EO/905) indicating that an oath or declaration in compliance with 37 CFR 1.497(a)-(b) is required.

Erin P. Thomson

Erin P. Thomson
Attorney Advisor
PCT Legal Administration

Telephone: 571-272-3292
Facsimile: 571-273-0459

UNITED STATES PATENT AND TRADEMARK OFFICE

Commissioner for Patents
United States Patent and Trademark Office
P.O. Box 1450
Alexandria, VA 22313-1450
www.uspto.gov

2 6 NOV 2008

Kraton Polymers U.S.
3333 Highway 6 South
Rm. CA-108
Houston TX 77082

In re Application of	:	
KORENSTRA, Jan et al.	:	
Application No.: 11/578,260	:	NOTIFICATION
PCT No.: PCT/EP2005/051593	:	
Int. Filing Date: 11 April 2005	:	OF A
Priority Date: 14 April 2004	:	
Docket No.: A0009/US	:	DEFECTIVE RESPONSE
For: A POLYMER MODIFIED ... OR ROOFING	:	
COMPOSITIONS	:	

This decision is in response to applicants' Reply to Notification of Defective Response, filed with the United States Patent and Trademark Office on 16 October 2008.

BACKGROUND

On 01 February 2008, the Office mailed Notification of Missing Requirements (Form PCT/DO/EO/905) indicating that an oath or declaration of the inventors was required.

On 11 March 2008, applicants submitted a declaration of three of the five inventors listed on the international application. The declaration did not list the inventors' citizenships.

On 12 September 2008, the Office mailed Notification of Defective Response (Form PCT/DO/EO/916) indicating that the declaration did not list the citizenships of the inventors.

DISCUSSION

The inventorship in an international application is set during the international phase. The inventors include those in the filed PCT and any changes made under PCT Rule 92*bis*. The Office does not have record of any changes under PCT Rule 92*bis*. The international application lists five inventors, but the declarations submitted to the Office list only three inventors.

As the declaration does not list the correct inventive entity, it is not in compliance with 37 CFR 1.497(a)-(b). Applicants must either furnish a declaration in compliance with 37 CFR 1.497(a)-(b), accompanied by an explanation from the inventors of why they executed a declaration setting forth the incorrect inventive entity, or if the inventive entity set forth in the international application is incorrect, applicants should furnish a request to correct the inventorship under 37 CFR 1.497(d), accompanied by the fee.

As the Notification of Defective Response (Form PCT/DO/EO/916) failed to mention the omission of two named inventors, it was defective and is hereby vacated.

CONCLUSION

Applicants are required to submit a proper reply within a time limit of **ONE (1) MONTH** from the mail date of this Notification. No extension of this time limit may be granted under 37 CFR 1.136(a). Any request for reconsideration of this decision should include a cover letter entitled "Response to Notification of Defective Response." Failure to timely reply will result in the abandonment of this application.

Any further correspondence with respect to this matter may be filed electronically via EFS-Web, or if mailed, should be addressed to the Mail Stop PCT, Commissioner for Patents, Office of PCT Legal Administration, P.O. Box 1450, Alexandria, Virginia 22313-1450, with the contents of the letter marked to the attention of the Office of PCT Legal Administration.

/Erin P. Thomson/

Erin P. Thomson
Attorney Advisor
PCT Legal Administration

Telephone: 571-272-3292
Facsimile: 571-273-0459

UNITED STATES PATENT and TRADEMARK OFFICE

COMMISSIONER FOR PATENTS
UNITED STATES PATENT AND TRADEMARK OFFICE
P.O BOX 1450
ALEXANDRIA, VA 22313-1450
www.uspto.gov

17 MAR 2008

TROUTMAN SANDERS LLP
600 PEACHTREE STREET, NE
ATLANTA GA 30308

In re Application of	:	DECISION ON
MURTHY Niren et al	:	
PCT No.: PCT/US2005/012571	:	
Application No.: 11/578,261	:	
Int. Filing Date: 12 April 2005	:	PETITION UNDER
Priority Date: 12 April 2004	:	
Attorney's Docket No.: GTRC170	:	
For: METHODS AND COMPOSITIONS FOR	:	
IMAGING AND BIOMEDICAL APPLICATIONS	:	37 CFR 1.47(a)

This decision is in response to petitioner's "Petition Under 37 CFR 1.47(a) TO FIND AN INVENTOR UNCOOPERATIVE AND/OR UNAVAILABLE" submitted on 15 February 2008, requesting the acceptance of the application without the signature of the inventor Amy R. Guinn. Petitioner has submitted the requisite petition fee.

BACKGROUND

On 12 April 2005, applicants filed international application PCT/US2005/012571, which claimed priority of an earlier application filed 12 April 2004. The thirty-month period for paying the basic national fee in the United States expired at midnight on 12 October 2006.

On 12 October 2006, applicant filed a transmittal letter for entry into the national stage in the United States, which was accompanied by, inter alia, the requisite basic national fee as required by 35 U.S.C. 371(c)(1). However, no executed declaration or oath was submitted at such time.

On 19 December 2007, the United States Designated/Elected Office (DO/EO/US) mailed a "NOTIFICATION OF MISSING REQUIREMENTS UNDER 35 U.S.C. 371 IN THE UNITED STATES DESIGNATED/ELECTED OFFICE (DO/EO/US)" (Form PCT/DO/EO/905) which informed applicant, inter alia, that an "Oath or Declaration of the inventors, in compliance with 37 CFR 1.497(a), and (b), identifying the application by the International application number and international filing date." The notification further stated that all items must be submitted within two months from the date of mailing or by 32 months from the priority date for the application in order to avoid abandonment of the national stage application.

In an attempt to satisfy the requirements of 35 U.S.C. 371(c)(4), petitioner, inter alia, filed on 15 February 2008, a petition under 37 CFR 1.47, which included a composite executed declaration by Niren Murthy, Jihua Hao, Stephen C. Yang, Michael J. Heffernan, and Bali Pulendran on their behalf and on behalf on the nonsigning inventor, Amy R. Guinn.

DISCUSSION

A petition under 37 CFR 1.47(a) must be accompanied by (1) the fee under 37 CFR 1.17(h), (2) factual proof that the missing joint inventor refuses to execute the application or cannot be reached after diligent effort, (3) a statement of the last known address of the missing inventor, and (4) an oath or declaration by each 37 CFR 1.47(a) applicant on his or her own behalf and on behalf of the non-signing joint inventor.

Furthermore, section 409.03(d) of the Manual of Patent Examining Procedure (M.P.E.P.) **Proof of Unavailability or Refusal**, the relevant sections states, in part:

> **REFUSAL TO JOIN:**
>
> A refusal by an inventor to sign an oath or declaration when the inventor has not been presented with the application papers does not itself suggest that the inventor is refusing to join the application unless it is clear that the inventor understands exactly what he or she is being asked to sign and refuses to accept the application papers. A copy of the application papers should be sent to the last known address of the nonsigning inventor, or, if the nonsigning inventor is represented by counsel, to the address of the nonsigning inventor's attorney. The fact that an application may contain proprietary information does not relieve the **37 CFR 1.47** applicant of the responsibility to present the application papers to the inventor if the inventor is willing to receive the papers in order to sign the oath or declaration. It is noted that the inventor may obtain a complete copy of the application, unless the inventor has assigned his or her interest in the application, and the assignee has requested that the inventor not be permitted access. See **MPEP § 106**. It is reasonable to require that the inventor be presented with the application papers before a petition under **37 CFR 1.47** is granted since such a procedure ensures that the inventor is apprised of the application to which the oath or declaration is directed. *In re Gray*, 115 USPQ 80 (Comm'r Pat. 1956).
>
> Where a refusal of the inventor to sign the application papers is alleged, the circumstances of the presentation of the application papers and of the refusal must be specified in a statement of facts by the person who presented the inventor with the application papers and/or to whom the refusal was made. Statements by a party not present when an oral refusal is made will not be accepted.
>
> Proof that a *bona fide* attempt was made to present a copy of the application papers (specification, including claims, drawings, and oath or declaration) to the nonsigning inventor for signature, but the inventor refused to accept delivery of the papers or expressly stated that the application papers should not be sent, may be sufficient. When there is an

express oral refusal, that fact along with the time and place of the refusal must be stated in the statement of facts. When there is an express written refusal, a copy of the document evidencing that refusal must be made part of the statement of facts. The document may be redacted to remove material not related to the inventor's reasons for refusal.

When it is concluded by the **37 CFR 1.47** applicant that a nonsigning inventor's conduct constitutes a refusal, all facts upon which that conclusion is based should be stated in the statement of facts in support of the petition or directly in the petition. If there is documentary evidence to support facts alleged in the petition or in any statement of facts, such evidence should be submitted. Whenever a nonsigning inventor gives a reason for refusing to sign the application oath or declaration, that reason should be stated in the petition.

Petitioner has satisfied requirements (1), and (3), of 37 CFR 1.47(a). However, requirements (2) and (4) have not been satisfied.

In this case, it has not been sufficiently demonstrated that a copy of the application papers were presented to the nonsigning inventor, Amy R. GUINN. Petitioner states that the application papers were sent to Amy R. GUINN on January 23, 2007, March 21, 2007, and December 20, 2007. The papers forwarded to her, however, did not appear to include a copy of the complete application papers (specification, including claims, drawings, and oath or declaration) as required under MPEP 409.03(d) since only the declaration, power of attorney document and assignment are mentioned as being sent to her last known addresses.

Also, it is unclear if Mark Anthony Merchant has first hand knowledge of the mailings to the nonsigning inventor because it appears this was done by others. If Mr. Merchant doesn't then petitioner needs to submit statements, with specific facts on the actions referred to the mailing of the documents (sections 3-6) to the nonsigning inventor by persons who have first-hand knowledge of such facts.

Regarding requirement (4), petitioner has provided a defective executed composite declaration. A composite declaration under 37 CFR 1.497(a) and (b) requires that the declaration must be complete and identify each inventor in each set of declarations provided. The composite declaration is defective because there appears to be 3 incomplete sets, each set only names of inventors rather than having all of them listed in each set.

Copies of the same page is not part of a proper declaration since it is considered a composite declaration and each must be a complete declaration with the proper statement and the names of each inventor even though each set of declarations may not have all the signatures of the inventors. Therefore, a proper declaration must consist of individual complete sets of declaration that taken as a whole would have all the required signatures as required under 37 CFR 1.497(a)(3).

Consequently, the petition does not satisfy all the requirements under 37 CFR 1.47(a).

CONCLUSION

The petition under 37 CFR 1.47(a) is **DISMISSED** without prejudice.

If reconsideration on the merits of this petition is desired, a proper response must be filed within TWO (2) MONTHS from the mail date of this decision. Any reconsideration request should include a cover letter entitled "Renewed Petition Under 37 CFR 1.47(a)." No additional petition fee is required. Extensions of time may be obtained under 37 CFR 1.136(a).

Any further correspondence with respect to this matter should be addressed to the Mail Stop PCT, Commissioner for Patents, Office of PCT Legal Administration, P.O. Box 1450, Alexandria, Virginia 22313-1450, with the contents of the letter marked to the attention of the Office of PCT Legal Administration.

Rafael Bacares
PCT Legal Examiner
PCT Legal Office
Telephone: (571) 272-3276
Facsimile: (571) 273-0459

UNITED STATES PATENT and TRADEMARK OFFICE

0 2 SEP 2008

COMMISSIONER FOR PATENTS
UNITED STATES PATENT AND TRADEMARK OFFICE
P.O BOX 1450
ALEXANDRIA, VA 22313-1450
www.uspto.gov

TROUTMAN SANDERS LLP
600 PEACHTREE STREET, NE
ATLANTA GA 30308

In re Application of	:	DECISION ON
MURTHY Niren et al	:	
PCT No.: PCT/US2005/012571	:	
Application No.: 11/578,261	:	
Int. Filing Date: 12 April 2005	:	PETITION UNDER
Priority Date: 12 April 2004	:	
Attorney's Docket No.: GTRC170	:	
For: METHODS AND COMPOSITIONS FOR	:	
IMAGING AND BIOMEDICAL APPLICATIONS	:	37 CFR 1.47(a)

This is in response to the "RENEWED PETITION UNDER 37 C.F.R. §1.47(a)" filed on 16 June 2008.

BACKGROUND

In a decision from this Office on 17 March 2008, the initial petition under 37 CFR 1.47(a) was dismissed. The decision stated that items (2) and (4) had not been satisfied.

On 16 June 2008, petitioner submitted a "Renewed Petition Under 37 CFR 1.47(a)" requesting reconsideration of the Office's decision of 17 March 2008 with respect to accepting the above application without the signature of nonsigning inventor Amy R Guinn. Filed with the renewed petition, *inter alia*, is further documentary evidence of mailing the application papers to Amy R Guinn to her last known addresses, and a new executed composite declaration.

On 23 June 2008, the USPTO mailed a Notification of Abandonment (Form PCT/DO/EO/909) stating that the application is abandoned for failure to respond to Decision from Legal Department dated 3/17/2008.

DISCUSSION

A petition under 37 CFR 1.47(a) must be accompanied by: (1) the fee under 37 CFR 1.17(h), (2) factual proof that the missing joint inventor refuses to execute the application or cannot be reached after diligent effort, (3) a statement of the last known address of the missing inventor, and (4) an oath or declaration by the 37 CFR 1.47(a) applicant on his or her own behalf and on behalf of the non-signing joint inventor.

The renewed petition of 13 June 2008 has satisfied items 2 and 4 under 37 CFR 1.47(a).

Dr. Merchant's averments do sufficiently demonstrate that a *bona fide* attempt was made to obtain the signature of Amy R Guinn and that she refused to sign the required papers. The declaration and application papers were mailed to her on 6 May 2008 to her first known last address of 1001 Garden View Drive, N.E., Apartment 330, Atlanta, Georgia 30319 and on 08 May 2008 to her second known last address of 1001 Garden View Drive, N.E., Apartment 1225, Atlanta, Georgia 30319 and in both instances someone signed for the application papers. The declarations, however, have not been returned. Accordingly, the conduct of Amy R. Guinn is interpreted based on the evidence of the papers submitted as a refusal to sign the required papers. Consequently, the current record does sufficiently establish Amy R Guinn's refusal to join in the application.

Regarding item (4), petitioner has not provided a properly executed composite declaration.

Petitioner has now satisfied items (1), (2), (3), and (4) under 37 CFR 1.47(a), thus completing the requirements under 37 CFR 1.47(a).

In addition, the Notification the of Abandonment (PCT/DO/EO/909) mailed 23 June 2008 was in error since petitioner has filed the renewed petition timely because petitioner has paid for an extension of time of one month.

CONCLUSION

The petition under 37 CFR 1.47(a) is **GRANTED**.

The Notification of Abandonment (PCT/DO/EO/909) mailed 23 June 2008 was in error and is hereby **VACATED**.

The Application Division and the International Division are authorized to accept the application as a 37 CFR 1.47(a) application and to mail a filing receipt. The application will be given a 35 U.S.C. 371(c)(1), (c)(2), and (c)(4) date of **16 June 2008.**

As provided in 37 CFR 1.47(a), a notice of the filing of this application will be forwarded to the non-signing inventor at his last known address of record.

A notice of the filing of the application under 37 CFR 1.47(a) will be published in the Official Gazette.

This application is being returned to the United States Designated/Elected Office (DO/EO/US) for continued processing under 35 U.S.C. 371.

Rafael Bacares
PCT Legal Examiner
PCT Legal Office
Telephone: (571) 272-6312
Facsimile: (571) 273-0459

0 2 SEP 2008

UNITED STATES PATENT and TRADEMARK OFFICE

COMMISSIONER FOR PATENTS
UNITED STATES PATENT AND TRADEMARK OFFICE
P.O BOX 1450
ALEXANDRIA, VA 22313-1450
www.uspto.gov

Amy R Guinn
1001 Garden View Drive, N.E.
Apartment 330
Atlanta, Georgia 30319

In re Application of
MURTHY Niren et al
PCT No.: PCT/US2005/012571
Application No.: 11/578,261
Int. Filing Date: 12 April 2005
Priority Date: 12 April 2004
Attorney's Docket No.: GTRC170
For: METHODS AND COMPOSITIONS FOR IMAGING AND BIOMEDICAL APPLICATIONS

Dear: Amy R Guinn,

You are named as an inventor in the above identified United States patent application, filed under the provisions of 37 CFR 1.47(a) and 35 U.S.C. 116. Should a patent be granted, you will be designated as an inventor.

As a named inventor, you are entitled to inspect any paper in the file wrapper of the application, order copies of all or any part thereof (at a prepaid cost per 37 CFR 1.19) or to make your position of record in the application. Alternatively, you may arrange to do any of the preceding through a registered patent agent or attorney presenting written authorization from you. If you care to join in the application, counsel of record (see below) would presumably assist you. Joining in the application would entail the filing of an appropriate oath or declaration by you pursuant to 37 CFR 1.63.

Rafael Bacares
PCT Legal Examiner
PCT Legal Office
Telephone: (571) 272-3276
Facsimile: (571) 273-0459

TROUTMAN SANDERS LLP
600 PEACHTREE STREET, NE
ATLANTA GA 30308

0 2 SEP 2008

UNITED STATES PATENT and TRADEMARK OFFICE

COMMISSIONER FOR PATENTS
UNITED STATES PATENT AND TRADEMARK OFFICE
P.O BOX 1450
ALEXANDRIA, VA 22313-1450
www.uspto.gov

Amy R Guinn
1001 Garden View Drive, N.E.
Apartment 1225
Atlanta, Georgia 30319

In re Application of
MURTHY Niren et al
PCT No.: PCT/US2005/012571
Application No.: 11/578,261
Int. Filing Date: 12 April 2005
Priority Date: 12 April 2004
Attorney's Docket No.: GTRC170
For: METHODS AND COMPOSITIONS FOR IMAGING AND BIOMEDICAL APPLICATIONS

Dear: Amy R Guinn,

You are named as an inventor in the above identified United States patent application, filed under the provisions of 37 CFR 1.47(a) and 35 U.S.C. 116. Should a patent be granted, you will be designated as an inventor.

As a named inventor, you are entitled to inspect any paper in the file wrapper of the application, order copies of all or any part thereof (at a prepaid cost per 37 CFR 1.19) or to make your position of record in the application. Alternatively, you may arrange to do any of the preceding through a registered patent agent or attorney presenting written authorization from you. If you care to join in the application, counsel of record (see below) would presumably assist you. Joining in the application would entail the filing of an appropriate oath or declaration by you pursuant to 37 CFR 1.63.

Rafael Bacares
PCT Legal Examiner
PCT Legal Office
Telephone: (571) 272-3276
Facsimile: (571) 273-0459

TROUTMAN SANDERS LLP
600 PEACHTREE STREET, NE
ATLANTA GA 30308

UNITED STATES PATENT AND TRADEMARK OFFICE

Commissioner for Patents
United States Patent and Trademark Office
P.O. Box 1450
Alexandria, VA 22313-1450
www.uspto.gov

KAEDING, KONRAD S.
E.I. DU PONT DE NEMOURS AND COMPANY
LEGAL PATENT RECORDS CENTER
4417 LANCASTER PIKE
WILMINGTON DE 19805

COPY MAILED
DEC 03 2008

In re Application of	:	
William Brown Farnham	:	
Application No. 11/578,268	:	DECISION ON PETITION
Filed: October 11, 2006	:	
Attorney Docket No. SR0028 US PCT	:	

This is a decision on the petition under the unintentional provisions of 37 CFR 1.137(b), filed November 7, 2008, to revive the above-identified application.

The petition is **GRANTED**.

The application became abandoned for failure to reply in a timely manner to the non-final Office action mailed February 8, 2008, which set a shortened statutory period for reply of three (3) months. No extensions of time under the provisions of 37 CFR 1.136(a) were obtained. Accordingly, the application became abandoned on May 9, 2008. A Notice of Abandonment was mailed September 5, 2008.

The petition satisfies the requirements of 37 CFR 1.137(b) in that petitioner has supplied (1) the reply in the form of an Amendment, (2) the petition fee of $1,620.00, and (3) an adequate statement of unintentional delay.

Telephone inquiries concerning this decision should be directed to Joan Olszewski at (571) 272-7751.

This application is being referred to Technology Center AU 1621 for appropriate action by the Examiner in the normal course of business on the reply received.

/Liana Walsh/
Liana Walsh
Petitions Examiner
Office of Petitions

UNITED STATES PATENT AND TRADEMARK OFFICE

UNITED STATES DEPARTMENT OF COMMERCE
United States Patent and Trademark Office
Address: COMMISSIONER FOR PATENTS
P.O. Box 1450
Alexandria, Virginia 22313-1450
www.uspto.gov

Kaeding, Konrad S.
E.I. Du Pont De Nemours and Company
Legal Patent Records Center
4417 Lancaster Pike
Wilmington, DE 19805

Mail Date: 04/21/2010

Applicant	: William Brown Farnham	: DECISION ON REQUEST FOR
Patent Number	: 7632966	: RECALCULATION of PATENT
Issue Date	: 12/15/2009	: TERM ADJUSTMENT IN VIEW
Appliction No	: 11/578,268	: OF WYETH AND NOTICE OF INTENT TO
Filed	: 10/11/2006	: ISSUE CERTIFICATE OF CORRECTION
		:

The Request for Recalculation is **GRANTED** to the extent indicated.

The patent term adjustment has been determined to be **164** days. The USPTO will *sua sponte* issue a certificate of correction reflecting the amount of PTA days determined by the recalculation.

Prior to the issuance of the certificate of correction, the USPTO will afford patentee an opportunity to be heard and request reconsideration. Accordingly, patentee has **one month or thirty (30) days**, whichever is longer, to file a request for reconsideration of this patent term adjustment calculation. See 35 U.S.C. 154(b)(3)(B)(ii) and 37 CFR 1.322(a)(4). No extensions of time will be granted under 37 CFR 1.136.

Patentee should use document code PET.OP if electronically filing a request for reconsideration of this patent term adjustment calculation. The patentee must also include the information required by 37 CFR 1.705(b)(2) and the fee required by 37 CFR 1.18(e). If patentee does not file a timely request for reconsideration of this patent term adjustment calculation including the information required by 37 CFR 1.705(b)(2) and the fee required by 37 CFR 1.18(e), the USPTO will issue a certificate of correction reflecting the PTA determination noted above.

Patentee should be aware that in order to preserve the right to review in the United States District Court for the District of Columbia of the USPTO patent term adjustment determination, patentee must ensure that he or she also take the steps required under 35 U.S.C. 154(b)(4)(A) in a timely manner. Nothing in the request for recalculation should be construed as providing an alternative time frame for commencing a civil action under 35 U.S.C. 154(b)(4)(A).

Any questions concerning this decision should be directed to the Office of Patent Legal Administration at 571-272-7702.

UNITED STATES PATENT AND TRADEMARK OFFICE

Commissioner for Patents
United States Patent and Trademark Office
P.O. Box 1450
Alexandria, VA 22313-1450
www.uspto.gov

10 NOV 2008

Steven S. Payne
1101 17th Street N.W.
Suite 1005
Washington, DC 20036

In re Application of	:	
KREUTZ, Tomas et al.	:	
Application No.: 11/578,270	:	DECISION
PCT No.: PCT/SE2005/000815	:	
Int. Filing Date: 31 May 2005	:	ON PETITION UNDER
Priority Date: 03 June 2004	:	
Docket No.: 150-375	:	37 CFR 1.137(b)
For: FIRE PROTECTION	:	

This is a decision on applicants' Petition to Revive an Unintentionally Abandoned Under 37 C.F.R. §1.137(b), filed in the above-captioned application on 19 September 2008.

BACKGROUND

On 12 October 2006, filed a transmittal letter for entry into the national phase in the United States, accompanied by an authorization to charge a credit card for the required fees.

On 04 June 2007, the Office mailed Notification of Abandonment (Form PCT/DO/EO/909) indicating that the application went abandoned for failure to timely pay the basic national fee.

On 19 September 2008, applicants filed a petition to revive the international application under 37 CFR 1.137(b).

DISCUSSION

A petition to revive an abandoned application under 37 CFR 1.137(b) must be filed without intentional delay from the time the application became abandoned and/or applicant first became aware of the abandoned status of the application. A petition under 37 CFR 1.137(b) must be accompanied by (1) a statement that the entire delay in filing the required reply from the due date for the reply until the filing of a grantable petition was unintentional, (2) the required reply, (3) the petition fee required by law (37 CFR 1.17(m)), and (4) a terminal disclaimer and fee (if the international application was filed prior to June 8, 1995).

Items (1), (3) and (4) have been satisfied. Applicants have made the required statement. The petition fee has been paid. A terminal disclaimer is not required as the application was filed on or after 08 June 1995.

Item (2) has not been satisfied. The proper reply is the basic national fee. The original credit card was declined and applicant has yet to furnish the basic national fee, the search fee or the examination fee.

CONCLUSION

For the above reasons, applicant's petition under 37 CFR 1.137(b) is **DISMISSED**, without prejudice.

The application remains **ABANDONED**.

If reconsideration on the merits of this petition is desired, a proper response must be filed within TWO (2) MONTHS from the mail date of this decision. Any reconsideration request should include a cover letter entitled "Renewed Petition Under 37 CFR 1.137(b)." Extensions of time are available under 37 CFR 1.136(a). Failure to timely reply may be construed as intentional delay.

Any further correspondence with respect to this matter may be filed electronically via EFS-Web or if mailed, should be addressed to the Mail Stop PCT, Commissioner for Patents, Office of PCT Legal Administration, P.O. Box 1450, Alexandria, Virginia 22313-1450, with the contents of the letter marked to the attention of the Office of PCT Legal Administration.

/Erin P. Thomson/

Erin P. Thomson
Attorney Advisor
PCT Legal Administration

Telephone: 571-272-3292
Facsimile: 571-273-0459

2 JUN 2009

UNITED STATES PATENT AND TRADEMARK OFFICE

Commissioner for Patents
United States Patent and Trademark Office
P.O. Box 1450
Alexandria, VA 22313-1450
www.uspto.gov

Steven S. Payne
PO Box 65024
Washington DC 20035

In re Application of	:	
KREUTZ, Tomas et al.	:	
Application No.: 11/578,270	:	DECISION
PCT No.: PCT/SE2005/000815	:	
Int. Filing Date: 31 May 2005	:	ON PETITION UNDER
Priority Date: 03 June 2004	:	
Docket No.: 150-375	:	37 CFR 1.137(b)
For: FIRE PROTECTION	:	

Applicant's renewed Petition For Revival Under 37 CFR 1.137(b), filed in the above-captioned application on 27 March 2009 is **GRANTED**.

Applicant states that "the entire delay in filing the required reply from the due date for the required reply until the filing of a grantable petition under 37 CFR 1.137(b) was unintentional," as required by 37 CFR 1.137(b)(3). The appropriate national fee and petition fee have been submitted. A terminal disclaimer is not required as the application was filed on or after 08 June 1995. Accordingly, all requirements under 37 CFR 1.137(b) have been satisfied.

Applicant has furnished a declaration of the inventor in compliance with 37 CFR 1.497(a)-(b). The surcharge for furnishing the search fee, examination fee or oath or declaration after 30 months from the priority date has been paid.

This application is being forwarded to the National Stage Processing Branch of the Office of Patent Application Processing for further action consistent with this decision.

/Erin P. Thomson/

Erin P. Thomson
Attorney Advisor
PCT Legal Administration

Telephone: 571-272-3292
Facsimile: 571-273-0459

UNITED STATES PATENT AND TRADEMARK OFFICE

Commissioner for Patents
United States Patent and Trademark Office
P.O. Box 1450
Alexandria, VA 22313-1450
www.uspto.gov

0 9 JAN 2007

Kenneth N. Nigon
Ratner Prestia
P.O. Box 980
Valley Forge, PA 19482

In re Application of	:	
SEDDA	:	
U.S. Application No.: 11/578,317	:	DECISION ON PETITION
PCT No.: PCT/FR05/50051	:	
Int. Filing Date: 27 January 2005	:	UNDER 37 CFR 1.137(b)
Priority Date: 27 January 2004	:	
Attorney Docket No.: GRY-147US	:	
For: ELECTROMAGNET-EQUIPPED CONTROL DEVICE FOR AN INTERNAL COMBUSTION ENGINE VALVE	:	

The petition to revive under 37 CFR 1.137(b) filed 12 October 2006 in the above-captioned application is hereby **GRANTED** as follows:

Applicant's statement that "This petition is filed within one year of the date of abandonment" is being interpreted to mean that the entire delay in providing payment of the full U.S. Basic National Fee from the due date for paying the fee until the filing of a grantable petition pursuant to this paragraph was unintentional. If this is an incorrect reading of applicant's statement applicant should contact the PCT Legal Office immediately. Applicant's statement and the prompt filing of the petition satisfies the requirement of 37 CFR 1.137(b)(3).

A review of the application file reveals that applicant has now provided payment of the full, U.S. Basic National fee and the requirements of 37 CFR 1.137(b) have been satisfied. Therefore, the request to revive the application abandoned under 35 U.S.C. 371(d) is granted as to the National stage in the United States of America.

This application is being forwarded to the United States Designated/Elected Office (US/DO/EO) for continued processing including the issuance of a Notification of Missing Requirements (Form PCT/DO/EO/905) indicating that a compliant, executed oath or declaration of the inventors and English translation of the international application are required.

Derek A. Putonen
Attorney Advisor
Office of PCT Legal Administration
Tel: (571) 272-3294
Fax: (571) 273-0459

UNITED STATES PATENT AND TRADEMARK OFFICE

Commissioner for Patents
United States Patent and Trademark Office
P.O. Box 1450
Alexandria, VA 22313-1450
www.uspto.gov

WINSTEAD PC
P.O. BOX 50784
DALLAS TX 75201

COPY MAILED

JAN 2 2 2008

OFFICE OF PETITIONS

In re Application of :
Mitsuhiro Shibano et al :
Application No. 11/578,341 : DECISION ON PETITION
Filed: October 12, 2006 :
Attorney Docket No. 33857-00015USPX :

This is a decision on the petition under 37 CFR 1.182, filed, June 15, 2007, to change the name of inventor "Tomoyuki Tsuchida" to – Tomoyuki Tobita --.

The petition is **GRANTED**.

Office records have been updated to reflect the inventor's change of name. A corrected Filing Receipt, which reflects the inventor's change of name, accompanies this decision on petition.

Any questions concerning this matter may be directed to the undersigned at (571) 272-3208. Any questions concerning the examination procedures or status of the application should be directed to the Technology Center.

This application is being referred to Technology Center AU 3682 for examination in due course.

Karen Creasy

Karen Creasy
Petitions Examiner
Office of Petitions

ATTACHMENT: Corrected Filing Receipt

UNITED STATES PATENT AND TRADEMARK OFFICE

UNITED STATES DEPARTMENT OF COMMERCE
United States Patent and Trademark Office
Address: COMMISSIONER FOR PATENTS
P.O. Box 1450
Alexandria, Virginia 22313-1450
www.uspto.gov

APPLICATION NUMBER	FILING or 371(c) DATE	GRP ART UNIT	FIL FEE REC'D	ATTY.DOCKET.NO	TOT CLAIMS	IND CLAIMS
11/578,341	03/09/2007	3682	1030	33857-00015USPX	9	2

CONFIRMATION NO. 2530

CORRECTED FILING RECEIPT

61060
WINSTEAD PC
P.O. BOX 50784
DALLAS, TX 75201

OC000000027842883

Date Mailed: 01/22/2008

Receipt is acknowledged of this non-provisional patent application. The application will be taken up for examination in due course. Applicant will be notified as to the results of the examination. Any correspondence concerning the application must include the following identification information: the U.S. APPLICATION NUMBER, FILING DATE, NAME OF APPLICANT, and TITLE OF INVENTION. Fees transmitted by check or draft are subject to collection. Please verify the accuracy of the data presented on this receipt. **If an error is noted on this Filing Receipt, please write to the Office of Initial Patent Examination's Filing Receipt Corrections. Please provide a copy of this Filing Receipt with the changes noted thereon. If you received a "Notice to File Missing Parts" for this application, please submit any corrections to this Filing Receipt with your reply to the Notice. When the USPTO processes the reply to the Notice, the USPTO will generate another Filing Receipt incorporating the requested corrections**

Applicant(s)

Mitsuhiro Shibano, Niigata, JAPAN;
Tomoyuki Tobita, Niigata, JAPAN;
Kenji Hayama, Aichi, JAPAN;

Power of Attorney: The patent practitioners associated with Customer Number 23932

Domestic Priority data as claimed by applicant

This application is a 371 of PCT/JP05/05148 03/22/2005

Foreign Applications

JAPAN 2004-121829 04/16/2004

If Required, Foreign Filing License Granted: 05/14/2007

The country code and number of your priority application, to be used for filing abroad under the Paris Convention, is **US 11/578,341**

Projected Publication Date: Not Applicable

Non-Publication Request: No

Early Publication Request: No

Title

Cast hollow crankshaft and manufacturing method of the same

Preliminary Class

074

PROTECTING YOUR INVENTION OUTSIDE THE UNITED STATES

Since the rights granted by a U.S. patent extend only throughout the territory of the United States and have no effect in a foreign country, an inventor who wishes patent protection in another country must apply for a patent in a specific country or in regional patent offices. Applicants may wish to consider the filing of an international application under the Patent Cooperation Treaty (PCT). An international (PCT) application generally has the same effect as a regular national patent application in each PCT-member country. The PCT process **simplifies** the filing of patent applications on the same invention in member countries, but **does not result** in a grant of "an international patent" and does not eliminate the need of applicants to file additional documents and fees in countries where patent protection is desired.

Almost every country has its own patent law, and a person desiring a patent in a particular country must make an application for patent in that country in accordance with its particular laws. Since the laws of many countries differ in various respects from the patent law of the United States, applicants are advised to seek guidance from specific foreign countries to ensure that patent rights are not lost prematurely.

Applicants also are advised that in the case of inventions made in the United States, the Director of the USPTO must issue a license before applicants can apply for a patent in a foreign country. The filing of a U.S. patent application serves as a request for a foreign filing license. The application's filing receipt contains further information and guidance as to the status of applicant's license for foreign filing.

Applicants may wish to consult the USPTO booklet, "General Information Concerning Patents" (specifically, the section entitled "Treaties and Foreign Patents") for more information on timeframes and deadlines for filing foreign patent applications. The guide is available either by contacting the USPTO Contact Center at 800-786-9199, or it can be viewed on the USPTO website at http://www.uspto.gov/web/offices/pac/doc/general/index.html.

For information on preventing theft of your intellectual property (patents, trademarks and copyrights), you may wish to consult the U.S. Government website, http://www.stopfakes.gov. Part of a Department of Commerce initiative, this website includes self-help "toolkits" giving innovators guidance on how to protect intellectual property in specific countries such as China, Korea and Mexico. For questions regarding patent enforcement issues, applicants may call the U.S. Government hotline at 1-866-999-HALT (1-866-999-4158).

LICENSE FOR FOREIGN FILING UNDER

Title 35, United States Code, Section 184

Title 37, Code of Federal Regulations, 5.11 & 5.15

GRANTED

The applicant has been granted a license under 35 U.S.C. 184, if the phrase "IF REQUIRED, FOREIGN FILING LICENSE GRANTED" followed by a date appears on this form. Such licenses are issued in all applications where the conditions for issuance of a license have been met, regardless of whether or not a license may be required as

set forth in 37 CFR 5.15. The scope and limitations of this license are set forth in 37 CFR 5.15(a) unless an earlier license has been issued under 37 CFR 5.15(b). The license is subject to revocation upon written notification. The date indicated is the effective date of the license, unless an earlier license of similar scope has been granted under 37 CFR 5.13 or 5.14.

This license is to be retained by the licensee and may be used at any time on or after the effective date thereof unless it is revoked. This license is automatically transferred to any related applications(s) filed under 37 CFR 1.53(d). This license is not retroactive.

The grant of a license does not in any way lessen the responsibility of a licensee for the security of the subject matter as imposed by any Government contract or the provisions of existing laws relating to espionage and the national security or the export of technical data. Licensees should apprise themselves of current regulations especially with respect to certain countries, of other agencies, particularly the Office of Defense Trade Controls, Department of State (with respect to Arms, Munitions and Implements of War (22 CFR 121-128)); the Bureau of Industry and Security, Department of Commerce (15 CFR parts 730-774); the Office of Foreign AssetsControl, Department of Treasury (31 CFR Parts 500+) and the Department of Energy.

NOT GRANTED

No license under 35 U.S.C. 184 has been granted at this time, if the phrase "IF REQUIRED, FOREIGN FILING LICENSE GRANTED" DOES NOT appear on this form. Applicant may still petition for a license under 37 CFR 5.12, if a license is desired before the expiration of 6 months from the filing date of the application. If 6 months has lapsed from the filing date of this application and the licensee has not received any indication of a secrecy order under 35 U.S.C. 181, the licensee may foreign file the application pursuant to 37 CFR 5.15(b).

UNITED STATES PATENT AND TRADEMARK OFFICE

UNITED STATES DEPARTMENT OF COMMERCE
United States Patent and Trademark Office
Address: COMMISSIONER FOR PATENTS
P.O. Box 1450
Alexandria, Virginia 22313-1450
www.uspto.gov

ANTONELLI, TERRY, STOUT & KRAUS, LLP
1300 NORTH SEVENTEENTH STREET
SUITE 1800
ARLINGTON, VA 22209-3873

Mail Date: 04/21/2010

Applicant	: Hans-Jurgen Schrag	: DECISION ON REQUEST FOR
Patent Number	: 7572218	: RECALCULATION of PATENT
Issue Date	: 08/11/2009	: TERM ADJUSTMENT IN VIEW
Appliction No	: 11/578,346	: OF WYETH AND NOTICE OF INTENT TO
Filed	: 10/12/2006	: ISSUE CERTIFICATE OF CORRECTION
		:

The Request for Recalculation is **GRANTED** to the extent indicated.

The patent term adjustment has been determined to be **0** days. The USPTO will *sua sponte* issue a certificate of correction reflecting the amount of PTA days determined by the recalculation.

Prior to the issuance of the certificate of correction, the USPTO will afford patentee an opportunity to be heard and request reconsideration. Accordingly, patentee has **one month or thirty (30) days**, whichever is longer, to file a request for reconsideration of this patent term adjustment calculation. See 35 U.S.C. 154(b)(3)(B)(ii) and 37 CFR 1.322(a)(4). No extensions of time will be granted under 37 CFR 1.136.

Patentee should use document code PET.OP if electronically filing a request for reconsideration of this patent term adjustment calculation. The patentee must also include the information required by 37 CFR 1.705(b)(2) and the fee required by 37 CFR 1.18(e). If patentee does not file a timely request for reconsideration of this patent term adjustment calculation including the information required by 37 CFR 1.705(b)(2) and the fee required by 37 CFR 1.18(e), the USPTO will issue a certificate of correction reflecting the PTA determination noted above.

Patentee should be aware that in order to preserve the right to review in the United States District Court for the District of Columbia of the USPTO patent term adjustment determination, patentee must ensure that he or she also take the steps required under 35 U.S.C. 154(b)(4)(A) in a timely manner. Nothing in the request for recalculation should be construed as providing an alternative time frame for commencing a civil action under 35 U.S.C. 154(b)(4)(A).

Any questions concerning this decision should be directed to the Office of Patent Legal Administration at 571-272-7702.

UNITED STATES PATENT AND TRADEMARK OFFICE

Commissioner for Patents
United States Patent and Trademark Office
P.O. Box 1450
Alexandria, VA 22313-1450
www.uspto.gov

08 NOV 2006

Louis T. Isaf
Womble Carlyle Sandbridge & Rice, LLP
P.O. Box 7037
Atlanta, GA 30357-0037

In re Application of	:	
MIDDLETON, et al.	:	
U.S. Application No.: 11/578,357	:	DECISION ON PETITION
PCT No.: PCT/US03/32164	:	
Int. Filing Date: 08 October 2003	:	UNDER 37 CFR 1.137(b)
Priority Date: 08 October 2002	:	
Attorney Docket No.: R029 1505PCT2	:	
For: CONTAINER HAVING A RIM OR OTHER	:	
FEATURE ENCAPSULATED BY OR FORMED	:	
FROM INJECTION-MOLDED MATERIAL	:	

The petition to revive under 37 CFR 1.137(b) filed 13 October 2006 in the above-captioned application is hereby **GRANTED** as follows:

Applicant's statement that "the entire delay in filing the required reply from the due date for the required reply until the filing of a grantable petition under 37 CFR 1.137(b) was unintentional," supporting statement of counsel and the prompt filing of the petition satisfies the requirement of 37 CFR 1.137(b)(3).

A review of the application file reveals that applicant has now provided payment of the full, U.S. Basic National fee and the requirements of 37 CFR 1.137(b) have been satisfied. Therefore, the request to revive the application abandoned under 35 U.S.C. 371(d) is granted as to the National stage in the United States of America.

This application is being forwarded to the United States Designated/Elected Office (US/DO/EO) for continued processing including the issuance of a Notification of Missing Requirements (Form PCT/DO/EO/905) indicating that an executed oath or declaration of the inventors is required.

Derek A. Putonen
Attorney Advisor
Office of PCT Legal Administration
Tel: (571) 272-3294
Fax: (571) 273-0459

UNITED STATES PATENT AND TRADEMARK OFFICE

UNITED STATES DEPARTMENT OF COMMERCE
United States Patent and Trademark Office
Address: COMMISSIONER FOR PATENTS
P.O. Box 1450
Alexandria, Virginia 22313-1450
www.uspto.gov

Robert D. Shedd, Patent Operations
THOMSON Licensing LLC
P.O. Box 5312
Princeton, NJ 08543-5312

Mail Date: 04/21/2010

Applicant	: Steven Edwin Miller	: DECISION ON REQUEST FOR
Patent Number	: 7623358	: RECALCULATION of PATENT
Issue Date	: 11/24/2009	: TERM ADJUSTMENT IN VIEW
Appliction No	: 11/578,398	: OF WYETH AND NOTICE OF INTENT TO
Filed	: 10/12/2006	: ISSUE CERTIFICATE OF CORRECTION
		:

The Request for Recalculation is **GRANTED** to the extent indicated.

The patent term adjustment has been determined to be **76** days. The USPTO will *sua sponte* issue a certificate of correction reflecting the amount of PTA days determined by the recalculation.

Prior to the issuance of the certificate of correction, the USPTO will afford patentee an opportunity to be heard and request reconsideration. Accordingly, patentee has **one month or thirty (30) days**, whichever is longer, to file a request for reconsideration of this patent term adjustment calculation. See 35 U.S.C. 154(b)(3)(B)(ii) and 37 CFR 1.322(a)(4). No extensions of time will be granted under 37 CFR 1.136.

Patentee should use document code PET.OP if electronically filing a request for reconsideration of this patent term adjustment calculation. The patentee must also include the information required by 37 CFR 1.705(b)(2) and the fee required by 37 CFR 1.18(e). If patentee does not file a timely request for reconsideration of this patent term adjustment calculation including the information required by 37 CFR 1.705(b)(2) and the fee required by 37 CFR 1.18(e), the USPTO will issue a certificate of correction reflecting the PTA determination noted above.

Patentee should be aware that in order to preserve the right to review in the United States District Court for the District of Columbia of the USPTO patent term adjustment determination, patentee must ensure that he or she also take the steps required under 35 U.S.C. 154(b)(4)(A) in a timely manner. Nothing in the request for recalculation should be construed as providing an alternative time frame for commencing a civil action under 35 U.S.C. 154(b)(4)(A).

Any questions concerning this decision should be directed to the Office of Patent Legal Administration at 571-272-7702.

UNITED STATES PATENT AND TRADEMARK OFFICE

UNITED STATES DEPARTMENT OF COMMERCE
United States Patent and Trademark Office
Address: COMMISSIONER FOR PATENTS
P.O. Box 1450
Alexandria, Virginia 22313-1450
www.uspto.gov

Robert D. Shedd, Patent Operations
THOMSON Licensing LLC
P.O. Box 5312
Princeton, NJ 08543-5312

Mail Date: 04/21/2010

Applicant	: Steven Edwin Miller	: DECISION ON REQUEST FOR
Patent Number	: 7580266	: RECALCULATION of PATENT
Issue Date	: 08/25/2009	: TERM ADJUSTMENT IN VIEW
Appliction No	: 11/578,399	: OF WYETH AND NOTICE OF INTENT TO
Filed	: 10/12/2006	: ISSUE CERTIFICATE OF CORRECTION
		:

The Request for Recalculation is **GRANTED** to the extent indicated.

The patent term adjustment has been determined to be **100** days. The USPTO will *sua sponte* issue a certificate of correction reflecting the amount of PTA days determined by the recalculation.

Prior to the issuance of the certificate of correction, the USPTO will afford patentee an opportunity to be heard and request reconsideration. Accordingly, patentee has **one month or thirty (30) days**, whichever is longer, to file a request for reconsideration of this patent term adjustment calculation. See 35 U.S.C. 154(b)(3)(B)(ii) and 37 CFR 1.322(a)(4). No extensions of time will be granted under 37 CFR 1.136.

Patentee should use document code PET.OP if electronically filing a request for reconsideration of this patent term adjustment calculation. The patentee must also include the information required by 37 CFR 1.705(b)(2) and the fee required by 37 CFR 1.18(e). If patentee does not file a timely request for reconsideration of this patent term adjustment calculation including the information required by 37 CFR 1.705(b)(2) and the fee required by 37 CFR 1.18(e), the USPTO will issue a certificate of correction reflecting the PTA determination noted above.

Patentee should be aware that in order to preserve the right to review in the United States District Court for the District of Columbia of the USPTO patent term adjustment determination, patentee must ensure that he or she also take the steps required under 35 U.S.C. 154(b)(4)(A) in a timely manner. Nothing in the request for recalculation should be construed as providing an alternative time frame for commencing a civil action under 35 U.S.C. 154(b)(4)(A).

Any questions concerning this decision should be directed to the Office of Patent Legal Administration at 571-272-7702.

0 1 DEC 2006

UNITED STATES PATENT AND TRADEMARK OFFICE

Commissioner for Patents
United States Patent and Trademark Office
P.O. Box 1450
Alexandria, VA 22313-1450
www.uspto.gov

Nixon Peabody LLP
401 9th Street, NW
Suite 900
Washington, DC 20004-2128

In re Application of SHAHBAZI, Majid Application No.: 11/578,420 PCT No.: PCT/US04/42565 Int. Filing Date: 22 December 2004 Priority Date: 23 December 2003 Docket No.: 039996-16 For: SYSTEM AND METHOD FOR ENFORCING A SECURITY POLICY ON MOBILE DEVICES USING DYNAMICALLY GENERATED SECURITY PROFILES	DECISION ON PETITION UNDER 37 CFR 1.137(b)

Applicant's "Petition For Revival of an International Application For Patent Designating the U.S. Abandoned Unintentionally Under 37 C.F.R. 1.137(b)," filed in the above-captioned application on 13 October 2006 is **GRANTED**.

Applicant states that "the entire delay in filing the required reply from the due date for the required reply until the filing of a grantable petition under 37 CFR 1.137(b) was unintentional," as required by 37 CFR 1.137(b)(3). The appropriate national fee and petition fee have been submitted. A terminal disclaimer is not required as the application was filed on or after 08 June 1995. Accordingly, all requirements under 37 CFR 1.137(b) have been satisfied.

The declaration furnished during the international phase does not comply with 37 CFR 1.497(a)-(b). The declaration was furnished under PCT Rule 26*ter*, but failed to identify the international application number to which it was directed. The fee for late filing of the search fee, examination fee or oath or declaration has been paid.

This application is being forwarded to the National Stage Processing Branch of the Office of PCT Operations for continued processing in accordance with this decision, including the mailing of a Notification of Missing Requirements (Form PCT/DO/EO/905) indicating that an oath or declaration in compliance with 37 CFR 1.497(a)-(b) is required.

Erin P. Thomson

Erin P. Thomson
Attorney Advisor
PCT Legal Administration

Telephone: 571-272-3292
Facsimile: 571-273-0459

UNITED STATES PATENT AND TRADEMARK OFFICE

UNITED STATES DEPARTMENT OF COMMERCE
United States Patent and Trademark Office
Address: COMMISSIONER FOR PATENTS
P.O. Box 1450
Alexandria, Virginia 22313-1450
www.uspto.gov

HUNTON & WILLIAMS LLP
INTELLECTUAL PROPERTY DEPARTMENT
1900 K STREET, N.W.
SUITE 1200
WASHINGTON, DC 20006-1109

Mail Date: 04/21/2010

Applicant	: Marie-Therese Scheirlinck	: DECISION ON REQUEST FOR
Patent Number	: 7667097	: RECALCULATION of PATENT
Issue Date	: 02/23/2010	: TERM ADJUSTMENT IN VIEW
Appliction No	: 11/578,428	: OF WYETH AND NOTICE OF INTENT TO
Filed	: 10/13/2006	: ISSUE CERTIFICATE OF CORRECTION
		:

The Request for Recalculation is **GRANTED** to the extent indicated.

The patent term adjustment has been determined to be **106** days. The USPTO will *sua sponte* issue a certificate of correction reflecting the amount of PTA days determined by the recalculation.

Prior to the issuance of the certificate of correction, the USPTO will afford patentee an opportunity to be heard and request reconsideration. Accordingly, patentee has **one month or thirty (30) days**, whichever is longer, to file a request for reconsideration of this patent term adjustment calculation. See 35 U.S.C. 154(b)(3)(B)(ii) and 37 CFR 1.322(a)(4). No extensions of time will be granted under 37 CFR 1.136.

Patentee should use document code PET.OP if electronically filing a request for reconsideration of this patent term adjustment calculation. The patentee must also include the information required by 37 CFR 1.705(b)(2) and the fee required by 37 CFR 1.18(e). If patentee does not file a timely request for reconsideration of this patent term adjustment calculation including the information required by 37 CFR 1.705(b)(2) and the fee required by 37 CFR 1.18(e), the USPTO will issue a certificate of correction reflecting the PTA determination noted above.

Patentee should be aware that in order to preserve the right to review in the United States District Court for the District of Columbia of the USPTO patent term adjustment determination, patentee must ensure that he or she also take the steps required under 35 U.S.C. 154(b)(4)(A) in a timely manner. Nothing in the request for recalculation should be construed as providing an alternative time frame for commencing a civil action under 35 U.S.C. 154(b)(4)(A).

Any questions concerning this decision should be directed to the Office of Patent Legal Administration at 571-272-7702.

UNITED STATES PATENT AND TRADEMARK OFFICE

UNITED STATES DEPARTMENT OF COMMERCE
United States Patent and Trademark Office
Address: COMMISSIONER FOR PATENTS
P.O. Box 1450
Alexandria, Virginia 22313-1450
www.uspto.gov

CONLEY ROSE, P.C.
5601 GRANITE PARKWAY, SUITE 750
PLANO, TX 75024

Mail Date: 04/22/2010

Applicant	: Yong Zhang	: DECISION ON REQUEST FOR
Patent Number	: 7664051	: RECALCULATION of PATENT
Issue Date	: 02/16/2010	: TERM ADJUSTMENT IN VIEW
Appliction No	: 11/578,449	: OF WYETH AND NOTICE OF INTENT TO
Filed	: 07/16/2007	: ISSUE CERTIFICATE OF CORRECTION
		:

The Request for Recalculation is **GRANTED** to the extent indicated.

The patent term adjustment has been determined to be **209** days. The USPTO will *sua sponte* issue a certificate of correction reflecting the amount of PTA days determined by the recalculation.

Prior to the issuance of the certificate of correction, the USPTO will afford patentee an opportunity to be heard and request reconsideration. Accordingly, patentee has **one month or thirty (30) days**, whichever is longer, to file a request for reconsideration of this patent term adjustment calculation. See 35 U.S.C. 154(b)(3)(B)(ii) and 37 CFR 1.322(a)(4). No extensions of time will be granted under 37 CFR 1.136.

Patentee should use document code PET.OP if electronically filing a request for reconsideration of this patent term adjustment calculation. The patentee must also include the information required by 37 CFR 1.705(b)(2) and the fee required by 37 CFR 1.18(e). If patentee does not file a timely request for reconsideration of this patent term adjustment calculation including the information required by 37 CFR 1.705(b)(2) and the fee required by 37 CFR 1.18(e), the USPTO will issue a certificate of correction reflecting the PTA determination noted above.

Patentee should be aware that in order to preserve the right to review in the United States District Court for the District of Columbia of the USPTO patent term adjustment determination, patentee must ensure that he or she also take the steps required under 35 U.S.C. 154(b)(4)(A) in a timely manner. Nothing in the request for recalculation should be construed as providing an alternative time frame for commencing a civil action under 35 U.S.C. 154(b)(4)(A).

Any questions concerning this decision should be directed to the Office of Patent Legal Administration at 571-272-7702.

UNITED STATES PATENT AND TRADEMARK OFFICE

UNITED STATES DEPARTMENT OF COMMERCE
United States Patent and Trademark Office
Address: COMMISSIONER FOR PATENTS
P.O. Box 1450
Alexandria, Virginia 22313-1450
www.uspto.gov

CONLEY ROSE, P.C.
5601 GRANITE PARKWAY, SUITE 750
PLANO, TX 75024

Mail Date: 05/18/2010

Applicant : Yong Zhang
Patent Number : 7664051
Issue Date : 02/16/2010
Application No : 11/578,449
Filed : 07/16/2007

: NOTICE CONCERNING IMPROPER
: CALCULATION OF PATENT TERM
: ADJUSTMENT BASED UPON USPTO
: IMPROPERLY MEASURING REDUCTION
: PERIOD UNDER 37 CFR 1.704(c)(10).

The United States Patent and Trademark Office (USPTO) discovered that in processing the recent recalculation decisions mailed in response to patentee's filed Request for Recalculation of Patent Term Adjustment in view of Wyeth, the USPTO improperly measured the reduction period for reductions under 37 CFR 1.704(c)(10). Pursuant to 37 CFR 1.704(c)(10), patentee's reduction begins on the date of filing the amendment under 37 CFR 1.312 ("1.312 amendment") or other related paper and ends on the date that the Office mails a response to the filing of the 1.312 amendment or other paper. It has been discovered that during the recalculation, the calculation failed to the limit the reduction to the mail date of the response to the 1.312 amendment or other paper. Accordingly, patentee's reductions were greater than warranted.

This notice **VACATES** the previous GRANTED request for recalculation and provides patentee with a revised GRANTED recalculation.

The patent term adjustment has been determined to be **235** days. The USPTO will *sua sponte* issue a certificate of correction reflecting the amount of patent term adjustment (PTA) days determined by the recalculation.

Prior to the issuance of the certificate of correction, the USPTO will afford patentee an opportunity to be heard and request reconsideration. Accordingly, patentee has **one month or thirty (30) days** from the mail date of this notice, whichever is longer, to file a request for reconsideration of this PTA calculation. See 35 U.S.C. § 154(b)(3)(B)(ii) and 37 CFR 1.322(a)(4).

Patentee should use document code PET.OP if electronically filing a request for reconsideration of this PTA calculation. The patentee must also include the information required by 37 CFR 1.705(b)(2), and the fee required by 37 CFR 1.18(e). If patentee does not file a timely request for reconsideration of this PTA calculation, including the information required by 37 CFR 1.705(b)(2) and the fee required by 37 CFR 1.18(e), the USPTO will issue a certificate of correction reflecting the PTA determination noted above.

Patentee should be aware that in order to preserve the right of review of the USPTO's PTA determination in the United States District Court for the District of Columbia, patentee must ensure that the steps required under 35 U.S.C. § 154 (b)(4) are taken in a timely manner. Nothing in the request for recalculation should be construed as providing an alternative time frame for commencing a civil action under 35 U.S.C. § 154(b)(4).

13 NOV 2006

UNITED STATES PATENT AND TRADEMARK OFFICE

Commissioner for Patents
United States Patent and Trademark Office
P.O. Box 1450
Alexandria, VA 22313-1450
www.uspto.gov

Jean-Christophe Ealet
24 bis, avenue de Silvacane
F-13640 La Roque D'Antheron
FRANCE

In re Application of	:	
EALET, Jean-Christophe	:	
Application No.: 11/578,509	:	DECISION ON
PCT No.: PCT/FR2004/002365	:	
Int. Filing Date: 20 September 2004	:	PETITION UNDER
Priority Date: 03 December 2003	:	
Attorney Docket No.: None	:	37 CFR 1.137(b)
For: METHOD AND DEVICE OF PREDICTIVE	:	
ASSESSMENT OF THERMAL LOAD FOR SOLID	:	
WASTE INCINERATION PLANTS	:	

This decision is in response to applicants' submission filed 16 October 2006..

BACKGROUND

On 20 September 2004, applicant filed international application PCT/FR2004/002365 which designated the U.S. and claimed a priority date of 03 December 2003. A copy of the international application was communicated to the United States Patent and Trademark Office (USPTO) from the International Bureau on 21 July 2005. The thirty-month period for paying the basic national fee in the United States expired at midnight on 05 June 2006 (03 June 2006 being a Saturday).

On 16 October 2006, applicant filed a transmittal letter for entry into the national stage in the United States, which was accompanied by, *inter alia*, the Basic National Fee, an English translation of the international application, a declaration of the inventor, an assertion of small entity status, the processing fee under 37 CFR 1.492(i) for providing the translation later than thirty months from the priority date, and a petition under 37 CFR 1.137(b) to revive the application.

DISCUSSION

A petition to revive the present application under 37 CFR 1.137(b) must include:
(1) The required reply;
(2) The petition fee;
(3) A statement that the entire delay in filing the required reply from the due date for the reply until the filing of a grantable petition was unintentional.

As to item (1), applicant submitted the basic national fee on 16 October 2006.

As to item (2), applicant submitted the petition fee on 16 October 2006.

As to item (3), the required statement has been provided.

A review of the application file reveals that, with the filing of the present petition and accompanying papers, a proper response has been submitted and all of the requirements of 37 CFR 1.137(b) for revival have been satisfied and revival is therefore appropriate.

Declaration of the Inventor

The declaration of the inventor filed 16 October 2006 is in compliance with 37 CFR 1.497(a)-(b).

CONCLUSION

The petition under 37 CFR 1.137(b) is **GRANTED** for the reasons set forth above.

Please direct further correspondence with respect to this matter to Mail Stop PCT, Commissioner for Patents, Office of PCT Legal Administration, P.O. Box 1450, Alexandria, Virginia 22313-1450, with the contents of the letter marked to the attention of the Office of PCT Legal Administration.

This application is being forwarded to the National Stage Processing Branch of the Office of PCT Operations to continue national stage processing of the application including preparing and mailing a NOTIFICATION OF MISSING REQUIREMENTS (Form PCT/DO/EO/905) requiring the surcharge under 37 CFR 1.492(h) for filing any of the search fee, the examination fee, or the oath or declaration after the date of the commencement of the national stage.

Daniel Stemmer
Legal Examiner
PCT Legal Affairs
Office of Patent Cooperation Treaty
Legal Administration
Telephone: (571) 272-3301
Facsimile: (571) 273-0459

17 MAR 2008

UNITED STATES PATENT AND TRADEMARK OFFICE

Commissioner for Patents
United States Patent and Trademark Office
P.O. Box 1450
Alexandria, VA 22313-1450
www.uspto.gov

BACON & THOMAS, PLLC
625 SLATERS LANE
FOURTH FLOOR
ALEXANDRIA VA 22314

In re Application of	:	
HEFFELS et al.	:	
Application No.: 11/578,519	:	DECISION
PCT No.: PCT/EP2005/051657	:	
Int. Filing Date: 14 April 2005	:	
Priority Date: 16 April 2004	:	
Attorney Docket No.: HEFF3003/FJD	:	
For: LUMINESCENCE SENSOR FOR	:	
DETERMINING AND/OR MONITORING AN	:	
ANALYTE THAT IS CONTAINED IN A FLUIDIC	:	
PROCESS MEDIUM	:	

This is a decision on applicants' petition under 37 CFR 1.47(a) filed 10 September 2007 in the United States Patent and Trademark Office (USPTO). The petition is **DISMISSED** without prejudice.

BACKGROUND

On 14 April 2005, applicants filed international application PCT/EP2005/051657, which designated the United States and claimed a priority date of 16 April 2004. A copy of the international application was communicated from the International Bureau to the USPTO on 27 October 2005. The thirty-month period for paying the basic national fee in the United States expired at midnight on 16 October 2006.

On 16 October 2006, applicants filed a submission for entry into the national stage in the United States which was accompanied by, *inter alia*, the U.S. Basic National Fee.

On 10 July 2007, the United States Designated/Elected Office (DO/EO/US) mailed a NOTIFICATION OF MISSING REQUIREMENTS UNDER 35 U.S.C. 371 (Form PCT/DO/EO/905) indicating, *inter alia*, that an oath or declaration of the inventors in compliance with 37 CFR 1.497(a)-(b) was required.

On 10 September 2007, applicants filed a petition under 37 CFR 1.47(a) which was accompanied by, *inter alia*, a copy of an e-mail from a Maria Palladino to a Linda E. Evans and a declaration of inventors.

DISCUSSION

A petition under 37 CFR 1.47(a) must be accompanied by: (1) the fee under 37 CFR 1.17(h); (2) factual proof that the missing joint inventor refuses to execute the application or cannot be reached after diligent effort; (3) a statement of the last known address of the missing inventor; and (4) an oath or declaration by each 37 CFR 1.47(a) applicant on his or her own behalf and on behalf of the non-signing joint inventor.

As to item (1), the petition fee is $200 rather than $130. The balance has been charged to Deposit Account 02-0200. Accordingly, item (1) has been met.

Item (2) has not been met. MPEP § 409.03(d), item I states in part:

> Where inability to find or reach a nonsigning inventor "after diligent effort" is the reason for filing under 37 CFR 1.47, a statement of facts should be submitted that fully describes the exact facts which are relied on to establish that a diligent effort was made.
>
> . . .
>
> The statement of facts must be signed, where at all possible, by a person having firsthand knowledge of the facts recited therein. Statements based on hearsay will not normally be accepted. Copies of documentary evidence such as internet searches, certified mail return receipts, cover letters of instructions, telegrams, that support a finding that the nonsigning inventor could not be found or reached should be made part of the statement. The steps taken to locate the whereabouts of the nonsigning inventor should be included >in the< statement of facts. It is important that the statement contain facts as opposed to conclusions..

Here, a statement of facts has not been provided by a person, e.g., Maria Palladino, having firsthand knowledge of the attempts to find Ralf Bernhard. Nor are specific efforts (e.g., mailing the application papers to Mr. Bernhard's last known address, internet searches) made to locate Mr. Bernhard set forth. Nor is any documentary evidence (e.g., return mail receipts, copies of the results of internet searches) of the attempts to reach Mr. Bernhard been provided.

Item (3) has been met.

Item (4) has been met.

CONCLUSION

For the above reasons, applicants' petition under 37 CFR 1.47(a) is **DISMISSED** without prejudice.

If reconsideration on the merits of this petition is desired, a proper response must be filed within TWO (2) MONTHS from the mail date of this decision. **Failure to timely file the proper response will result in abandonment of this application.** Any reconsideration request should include a cover letter entitled "Renewed Petition Under 37 CFR 1.47(a)". No additional petition fee is required. Extensions of time may be obtained under 37 CFR 1.136(a).

Please direct further correspondence with respect to this matter to Mail Stop PCT, Commissioner for Patents, Office of PCT Legal Administration, P.O. Box 1450, Alexandria, Virginia 22313-1450, with the contents of the letter marked to the attention of the Office of PCT Legal Administration.

/Daniel Stemmer/

Daniel Stemmer
Legal Examiner
PCT Legal Affairs
Office of Patent Cooperation Treaty
Legal Administration
Telephone: (571) 272-3301
Facsimile: (571) 273-0459

UNITED STATES PATENT AND TRADEMARK OFFICE

UNITED STATES DEPARTMENT OF COMMERCE
United States Patent and Trademark Office
Address: COMMISSIONER FOR PATENTS
P.O. Box 1450
Alexandria, Virginia 22313-1450
www.uspto.gov

WENDEROTH, LIND & PONACK, L.L.P.
1030 15th Street, N.W.,
Suite 400 East
Washington, DC 20005-1503

Mail Date: 04/20/2010

Applicant	: Yoshihiro Yamamoto	: DECISION ON REQUEST FOR
Patent Number	: 7598425	: RECALCULATION of PATENT
Issue Date	: 10/06/2009	: TERM ADJUSTMENT IN VIEW
Appliction No	: 11/578,523	: OF WYETH AND NOTICE OF INTENT TO
Filed	: 07/20/2007	: ISSUE CERTIFICATE OF CORRECTION
		:

The Request for Recalculation is **GRANTED** to the extent indicated.

The patent term adjustment has been determined to be **51** days. The USPTO will *sua sponte* issue a certificate of correction reflecting the amount of PTA days determined by the recalculation.

Prior to the issuance of the certificate of correction, the USPTO will afford patentee an opportunity to be heard and request reconsideration. Accordingly, patentee has **one month or thirty (30) days**, whichever is longer, to file a request for reconsideration of this patent term adjustment calculation. See 35 U.S.C. 154(b)(3)(B)(ii) and 37 CFR 1.322(a)(4). No extensions of time will be granted under 37 CFR 1.136.

Patentee should use document code PET.OP if electronically filing a request for reconsideration of this patent term adjustment calculation. The patentee must also include the information required by 37 CFR 1.705(b)(2) and the fee required by 37 CFR 1.18(e). If patentee does not file a timely request for reconsideration of this patent term adjustment calculation including the information required by 37 CFR 1.705(b)(2) and the fee required by 37 CFR 1.18(e), the USPTO will issue a certificate of correction reflecting the PTA determination noted above.

Patentee should be aware that in order to preserve the right to review in the United States District Court for the District of Columbia of the USPTO patent term adjustment determination, patentee must ensure that he or she also take the steps required under 35 U.S.C. 154(b)(4)(A) in a timely manner. Nothing in the request for recalculation should be construed as providing an alternative time frame for commencing a civil action under 35 U.S.C. 154(b)(4)(A).

Any questions concerning this decision should be directed to the Office of Patent Legal Administration at 571-272-7702.

UNITED STATES PATENT AND TRADEMARK OFFICE

Commissioner for Patents
United States Patent and Trademark Office
P.O. Box 1450
Alexandria, VA 22313-1450
www.uspto.gov

19 DEC 2006

Harness, Dickey & Pierce, P.L.C.
P.O. Box 828
Bloomfield Hills, MI 48303

In re Application of
LUO et al.
Application No.: 11/578,531
PCT No.: PCT/CN05/00249
Int. Filing Date: 28 February 2005
Priority Date: 26 February 2004
Attorney Docket No.: 9896-000092/US/NP
For: METHOD AND SYSTEM FOR IMPLEMENTING RING SERVICE OF INSTANT MESSAGING

DECISION ON PETITION UNDER 37 CFR 1.137(b)

The petition to revive under 37 CFR 1.137(b) filed 13 October 2006 in the above-captioned application is hereby **GRANTED** as follows:

Applicant's statement that the "the entire delay in filing the required reply from the due date for the reply until the filing of a grantable petition under 37 CFR 1.137(b) was unintentional" meets the requirements of 37 CFR 1.137(b)(3).

A review of the application file reveals that applicant has submitted the basic national fee and the requirements of 37 CFR 1.137(b) have been satisfied. Therefore, the request to revive the application abandoned under 35 U.S.C. 371(d) is granted as to the National stage in the United States of America.

This application is being returned to the United States Designated/Elected Office for processing in accordance with this decision.

Anthony Smith
Attorney-Advisor
Office of PCT Legal Administration
Tel: (571) 272-3298
Fax: (571) 273-0459

UNITED STATES PATENT AND TRADEMARK OFFICE

Commissioner for Patents
United States Patent and Trademark Office
P.O. Box 1450
Alexandria, VA 22313-1450
www.uspto.gov

02 AUG 2007

Harness, Dickey & Pierce, P.L.C.
P.O. Box 828
Bloomfield Hills, MI 48303

In re Application of LUO et al. Application No.: 11/578,531 PCT No.: PCT/CN05/00249 Int. Filing Date: 28 February 2005 Priority Date: 26 February 2004 Attorney Docket No.: 9896-000092/US/NP For: METHOD AND SYSTEM FOR IMPLEMENTING RING SERVICE OF INSTANT MESSAGING	DECISION ON PETITION UNDER 37 CFR 1.47(a)

This decision is issued in response to applicants' "Petition on Behalf of Joint Inventors to File Application on Behalf of Inventor Who Refuses to Sign (37 CFR 1.47(a))" filed 20 July 2007.

BACKGROUND

On 28 February 2005, applicants filed international application PCT/CN05/00249 which claimed a priority date of 26 February 2004. A copy of the international application was communicated to the United States Patent and Trademark Office from the International Bureau on 15 September 2005. Pursuant to 37 CFR 1.495, the thirty-month period for paying the basic national fee in the United States expired at midnight on 26 August 2006.

On 13 October 2006, applicants filed a transmittal letter for entry into the national stage in the United States, which was accompanied by, inter alia: the requisite basic national fee as required by 35 U.S.C. 371(c)(1); a copy of the international application; a preliminary amendment; and a petition to revive under 37 CFR 1.137(b). In a decision dated 19 December 2006, applicants' petition under 37 CFR 1.137(b) was granted.

On 24 January 2007, the United Stated Designated/Elected Office mailed a Notification of Missing Requirements under 35 U.S.C. 371 (Form PCT/DO/EO/905) indicating that an oath or declaration in compliance with 37 CFR 1.497(a) and (b) must be filed. The notification set a two-month time limit in which to respond.

On 20 July 2007, applicants filed a declaration executed by two of the three joint-inventors and a petition under 37 CFR 1.47(a). The petition seeks acceptance of the application without the signature of joint- inventor, Chaojin Lui .

DISCUSSION

A petition under 37 CFR 1.47(a) must be accompanied by (1) the fee under 37 CFR 1.17, (2) factual proof that the missing joint inventor refuses to execute the application or cannot be reached after diligent effort, (3) a statement of the last known address of the missing inventor, and (4) an oath or declaration by each 37 CFR 1.47(a) applicant on his or her own behalf and behalf of the non-signing joint inventor. Items (1), (3) and (4) have been satisfied.

Regarding item (2) above, petitioner states that Chaojin Luo cannot be found or after diligent effort. Section 409.03(d) of the Manual of Patent Examining Procedure (M.P.E.P.), **Proof of Unavailability or Refusal**, states, in part:

> Where inability to find or reach a nonsigning inventor "after diligent effort" is the reason for filing under 37 CFR 1.47, an affidavit or declaration of facts should be submitted that fully describes the exact facts which are relied on to establish that a diligent effort was made.
>
> The fact that a nonsigning inventor is on vacation or out of town and is therefore temporarily unavailable to sign the declaration is not an acceptable reason for filing under 37 CFR 1.47. Such a petition will be dismissed as inappropriate.
>
> The affidavit or declaration of facts must be signed, where at all possible, by a person having firsthand knowledge of the facts recited therein. Statements based on hearsay will not normally be accepted. Copies of documentary evidence such as certified mail return receipt, cover letter of instructions, telegrams, etc., that support a finding that the nonsigning inventor could not be found or reached should be made part of the affidavit or declaration. It is important that the affidavit or declaration contain statements of fact as opposed to conclusions.
>
> Where a refusal of the inventor to sign the application papers is alleged, the circumstances of this refusal must be specified in an affidavit or declaration by the person to whom the refusal was made. Statements by a party not present when an oral refusal is made will not be accepted.

A review of the present petition reveals that applicant has not provided an acceptable showing that a diligent effort was made to reach the non-signing inventor, Chaojin Luo. Gong Jie states that "the undersigned presented via registered mail a copy of the declaration documents to Chaojin Lui by a letter of October 8, 2007 . . . The inventor cannot be reached after diligent effort." However, petitioner fails to include evidence of any other attempts made to locate the nonsigning inventor. The single mailing of the

papers to the nonsigning inventor's last known address does not constitute a "diligent" effort to locate the inventor. Applicant must show that alternative means were employed, such as a search of telephone and/or Internet directories, in an attempt to locate Chaojin Lui. As stated above, copies of documentary evidence such as a certified mail return receipt, cover letter of instruction, telegrams, etc., should be supplied by a person having firsthand knowledge of the facts.

For the above reasons, it would not be appropriate to accept this application without the signature of Chaojin Lui at this time.

CONCLUSION

The petition under 37 CFR 1.47(a) is **DISMISSED** without prejudice.

If reconsideration on the merits of this petition is desired, a proper response must be filed within **TWO (2) MONTH** from the mail date of this decision. Any reconsideration request should include a cover letter entitled "Renewed Petition Under 37 CFR 1.47(a)." No additional petition fee is required.

Any further correspondence with respect to this matter should be addressed to: Mail Stop PCT, Commissioner for Patents, Office of PCT Legal Administration, P.O. Box 1450, Alexandria, Virginia 22313-1450, with the contents of the letter marked to the attention of the Office of PCT Legal Administration.

Anthony Smith

Anthony Smith
Attorney-Advisor
Office of PCT Legal Administration
Tel: (571) 272-3298
Fax: (571) 273-0459

UNITED STATES PATENT AND TRADEMARK OFFICE

Commissioner for Patents
United States Patent and Trademark Office
P.O. Box 1450
Alexandria, VA 22313-1450
www.uspto.gov

10 OCT 2007

Harness, Dickey & Pierce, P.L.C.
P.O. Box 828
Bloomfield Hills, MI 48303

In re Application of
LUO et al.
Application No.: 11/578,531
PCT No.: PCT/CN05/00249
Int. Filing Date: 28 February 2005
Priority Date: 26 February 2004
Attorney Docket No.: 9896-000092/US/NP
For: METHOD AND SYSTEM FOR IMPLEMENTING RING SERVICE OF INSTANT MESSAGING

DECISION ON PETITION UNDER 37 CFR 1.47(a)

This decision is issued in response to applicants' "Renewed Petition under 37 CFR 1.47(a)" filed 01 October 2007.

BACKGROUND

On 28 February 2005, applicants filed international application PCT/CN05/00249 which claimed a priority date of 26 February 2004. A copy of the international application was communicated to the United States Patent and Trademark Office from the International Bureau on 15 September 2005. Pursuant to 37 CFR 1.495, the thirty-month period for paying the basic national fee in the United States expired at midnight on 26 August 2006.

On 13 October 2006, applicants filed a transmittal letter for entry into the national stage in the United States, which was accompanied by, inter alia: the requisite basic national fee as required by 35 U.S.C. 371(c)(1); a copy of the international application; a preliminary amendment; and a petition to revive under 37 CFR 1.137(b). In a decision dated 19 December 2006, applicants' petition under 37 CFR 1.137(b) was granted.

On 24 January 2007, the United Stated Designated/Elected Office mailed a Notification of Missing Requirements under 35 U.S.C. 371 (Form PCT/DO/EO/905) indicating that an oath or declaration in compliance with 37 CFR 1.497(a) and (b) must be filed. The notification set a two-month time limit in which to respond.

On 20 July 2007, applicants filed a declaration executed by two of the three joint-inventors and a petition under 37 CFR 1.47(a). In a decision dated 02 August 2007,

applicants' petition under 37 CFR 1.47 was dismissed without prejudice.

On 01 October 2007, applicants filed a renewed petition under 37 CFR 1.47(a).

DISCUSSION

A petition under 37 CFR 1.47(a) must be accompanied by (1) the fee under 37 CFR 1.17(h), (2) factual proof that the missing joint inventor refuses to execute the application or cannot be reached after diligent effort, (3) a statement of the last known address of the missing inventor, and (4) an oath or declaration by each 37 CFR 1.47(a) applicant on his or her own behalf and behalf of the non-signing joint inventor.

Applicants here have submitted the appropriate petition fee. Item (1) is therefore satisfied.

Regarding item (2), applicants assert that the nonsigning inventor (Chaojin Luo) cannot be located after diligent effort. The petition includes a declaration of Gong Jie, and exhibits thereto, detailing the efforts made to locate and contact the nonsigning inventor, including mailings to multiple addresses, email communications, efforts to reach the inventor at multiple telephone numbers, and an internet search to identify the most current address and telephone number for the nonsigning inventor. These materials provide an adequate showing that the nonsigning inventor cannot be reached or located after diligent effort. Item (2) is therefore satisfied.

Regarding item (3), applicants have provided the last known address of the nonsigning inventor. Accordingly, item (3) is therefore satisfied.

Regarding item (4), section 409.03(a) of the Manual of Patent Examining Procedure ("MPEP") states that:

> An oath or declaration signed by all the available joint inventors with the signature block of the nonsigning inventor(s) left blank may be treated as having been signed by all the available joint inventors on behalf of the nonsigning inventor(s), unless otherwise indicated.

Here, applicants have filed declarations executed by two of the three inventors and including an unsigned signature box identifying the nonsigning inventor (Chaojin Luo). This declaration is treated as having been executed by the available inventors on their behalf and on behalf of the nonsigning inventor. Item (4) is therefore satisfied.

For the reasons stated above, it is appropriate to accept the application without the signature of Chaojin Luo under 37 CFR 1.47(a) at this time.

CONCLUSION

The petition under 37 CFR 1.47(a) is **GRANTED**.

As provided in 37 CFR 1.47(c), a notice of the filing of this application will be forwarded to the nonsigning inventor at his last known address of record.

A notice of the filing of the application under 37 CFR 1.47(c) will be published in the Official Gazette.

This application is being returned to the United States Designated/Elected Office for processing in accordance with this decision.

Anthony Smith
Attorney-Advisor
Office of PCT Legal Administration
Tel: (571) 272-3298
Fax: (571) 273-0459

17 JUL 2008

UNITED STATES PATENT AND TRADEMARK OFFICE

Commissioner for Patents
United States Patent and Trademark Office
P.O. Box 1450
Alexandria, VA 22313-1450
www.uspto.gov

STROOCK & STROOCK & LAVAN LLP
180 MAIDEN LANE
NEW YORK NY 10038

In re Application of:	:	
FURLOTTI, Filippo	:	DECISION ON PETITION
U.S. Application No.: 11/578,534	:	
PCT No.: PCT/IT2004/000210	:	
International Filing Date: 14 April 2004	:	
Priority Date: None	:	
Atty Docket No.: 357153/0014	:	
For: DEVICE FOR OPENING FELXIBLE CONTAINERS	:	

This decision is issued in response to the "Petition Under 37 CFR 1.182 (Question Not Specifically Provided For)" filed 15 May 2008. Deposit Account No 19-4709 will be charged the required petition fee.

BACKGROUND

On 14 April 2004, applicant filed international application PCT/IT2004/000210. The international application did not claim an earlier priority date, and it designated the United States. On 27 October 2005, a copy of the international application was communicated to the United States Patent and Trademark Office (USPTO) by the International Bureau (IB). The deadline for submission of the basic national fee was thirty months from the international filing date, i.e., 14 October 2006.

The published international application included 11 numbered claims. The claims were not amended during the international phase.

On 13 October 2006, applicants filed a Transmittal Letter for entry into the national stage in the United States accompanied by, among other materials, payment of the basic national fee, and a revised version of the specification and claims, apparently intended as a substitute specification. This purported substitute specification included 27 numbered claims. No preliminary amendment directed to the 11 claims of record herein was included with this submission.

On 02 July 2007, the United States Designated/Elected Office (DO/EO/US) mailed a "Notification Of Acceptance" (Form PCT/DO/EO/903) identifying the date under 35 U.S.C. 371(c) as 13 October 2006.

On 05 September 2007, an Office Action rejecting the 11 claims of record was mailed herein.

On 15 May 2008, applicant filed the petition considered herein. The petition requests withdrawal of the Office Action and the mailing of a replacement Office Action, asserting that the Office Action improperly considered the 11 original claims herein, rather than the set of 27 revised claims included in applicant's 13 October 2006 filing.

DISCUSSION

The claims of record in a U.S. national stage application filed under 35 U.S.C. 371 are the claims contained in the international application, unless the claims are properly amended during the international phase under PCT Article 19 or PCT Article 34 or pursuant to a preliminary amendment in compliance with 37 CFR 1.121 (see MPEP section 1893.01(a)-(c)).

In the present case, the claims were not amended during the international phase; thus, the claims of record for the national stage application are the 11 claims set forth in the published international application, subject to any preliminary amendment filed by applicant in compliance with 37 CFR 1.121.

As noted above, applicant here included a revised set of 27 claims with the national stage materials filed 13 October 2006. However, applicant did not submit a preliminary amendment in compliance with 37 CFR 1.121, as necessary to replace the claims of record with the revised set of 27 claims. For example, applicants did not provide the required "complete listing of all claims ever presented, including the text of all pending and withdrawn claims, in the application" required by 37 CFR 1.121(c). Nor did applicants provide the required claim text with markings indicating the changes being made relative to the prior version of the claims.

Based on applicant's failure to effectively amend the claims during the international phase (under PCT Articles 19 or 34) or during the national phase (pursuant to 37 CFR 1.121), the claims of record herein remain the 11 claims included in the international application as filed. The Office Action issued herein, which examined these 11 claims, was therefore directed to the proper claims of record. Applicant's request that this Office Action be withdrawn, and that a new Office Action directed to the revised set of 27 claims filed 13 October 2006, is therefore appropriately dismissed.

CONCLUSION

The petition under 37 CFR 1.182 filed 15 May 2008 is **DISMISSED** without prejudice.

The claims of record herein remain the 11 claims included in the published international application. In that the Office Action issued herein was properly directed to such claims, withdrawal of the Office Action is not appropriate on the present record.

Any request for reconsideration on the merits of this decision must be filed within **TWO (2) MONTHS** from the mailing date of this decision, indicated above. Any such request should include a cover sheet entitled "Renewed Petition Under 37 CFR 1.182" and must include a proper showing that the 11 claims of record herein were effectively and timely amended so as to be replaced by the revised set of 27 claims filed 13 October 2006.

Any further correspondence with respect to this matter should be addressed to Mail Stop PCT, Commissioner for Patents, P.O. Box 1450, Alexandria, Virginia 22313-1450, with the contents of the letter marked to the attention of the Office of PCT Legal Administration

Richard M. Ross
Attorney Advisor
Office of PCT Legal Administration
Telephone: (571) 272-3296
Facsimile: (571) 273-0459

UNITED STATES PATENT AND TRADEMARK OFFICE

COMMISSIONER FOR PATENTS
UNITED STATES PATENT AND TRADEMARK OFFICE
P.O. BOX 1450
ALEXANDRIA, VA 22313-1450
www.uspto.gov

18 MAR 2009

TAKEUCHI & KUBOTERA, LLP
200 DAINGERFIELD ROAD, SUITE 202
ALEXANDRIA, VA 22314

In re Application of KAMPMEYER et al	:	
U.S. Application No.: 11/578,588	:	
PCT Application No.: PCT/EP2005/003839	:	
Int. Filing Date: 12 April 2005	:	
Priority Date Claimed: 14 April 2004	:	DECISION
Attorney Docket No.: P0601Y	:	
For: METHOD, DEVICE AND SYSTEM FOR HIGH-PRECISION METERING AND/OR MIXING LIQUIDS	:	

This is in response to applicant's petition under 37 CFR 1.182 filed 15 January 2009.

BACKGROUND

On 12 April 2005, applicant filed international application PCT/EP2005/003839, which claimed priority of an earlier Germany application filed 14 April 2004. A copy of the international application was communicated to the USPTO from the International Bureau on 27 October 2005. The thirty-month period for paying the basic national fee in the United States expired on 16 October 2006 (14 October 2006 was a Saturday).

On 16 October 2006, applicant filed national stage papers in the United States Designated/Elected Office (DO/EO/US). The submission was accompanied by, *inter alia*, the basic national fee required by 35 U.S.C. 371(c)(1) and a transmittal letter (Form PTO-1390).

On 15 January 2009, applicant filed the present petition under 37 CFR 1.182.

DISCUSSION

The petition states that the incorrect international application number was listed on Form PTO-1390. The petition further states that the error was inadvertent. Applicant's explanation for the error is accepted.

CONCLUSION

For the reasons above, the petition under 37 CFR 1.182 is GRANTED.

The application has an International Filing Date under 35 U.S.C. 363 of 12 April 2005, and a date under 35 U.S.C. 371(c)(1), (c)(2), and (c)(4) of 16 October 2006.

This application is being returned to Technology Center Art Unit 1797 for continued processing.

Bryan Lin

Bryan Lin
PCT Legal Examiner
PCT Legal Office

Telephone: 571-272-3303
Facsimile: 571-273-0459

ATTACHMENT: corrected filing receipt

UNITED STATES PATENT AND TRADEMARK OFFICE

Commissioner for Patents
United States Patent and Trademark Office
P.O. Box 1450
Alexandria, VA 22313-1450
www.uspto.gov

12 JUN 2007

Merck & Co, Inc.
Patent Department, RY60-30
P.O. Box 2000
126 East Lincoln Avenue
Rahway, New Jersey 07065

In re Application of
SANO et al.
Application No.: 11/578,592
PCT No.: PCT/JP05/07174
Int. Filing Date: 14 April 2005
Priority Date: 14 April 2004
Attorney Docket No.: BY0044P
For: NOVEL MONKEY GPR103 AND MONKEY QRFP AND METHOD OF EVALUATING COMPOUND BY USING GPR103

DECISION ON REQUEST

This decision is in response to applicants' "Petition for Correction of Inventorship Pursuant to 37 CFR 1.48(e)" filed 20 April 2007.

On 14 April 2005, applicants filed international application PCT/JP05/07174 which claimed a priority date of 14 April 2004. A copy of the international application was communicated to the United States Patent and Trademark Office from the International Bureau on 27 October 2005. The international application named Hideki Sano, Hisashi Iwaasa, and Satoshi Mashiko as the applicant/inventors. Pursuant to 37 CFR 1.495, the deadline for payment of the basic national fee in the United States was to expire 30 months from the priority date, 16 October 2006.

On 16 October 2006, applicants filed a transmittal letter for entry into the national stage accompanied by, *inter alia:* the requisite basic national fee; a copy of the international application; a translation of the international application; and an executed declaration. The Transmittal Letter (PTO-1390) identified four applicant/inventors (Hideki Sano, Hisashi Iwaasa, Satoshi Mashiko, and Yoshili Hasegawa) for the DO/EO/US, whereas, the executed declaration identified only three applicant/inventors (Hideki Sano, Hisashi Iwaasa, and Satoshi Mashiko).

In order the correct the error on the Transmittal Letter (PTO-1390), applicants filed a "Petition for Correction of Inventorship Pursuant to 37 CFR 1.48(e)." A petition under 37 CFR 1.48(e) is only available for provisional applications. Further, applicants state that

Yoshiki Hasegawa was inadvertently and without deceptive intent listed on the Transmittal Letter (PTO-1390) as an inventor. Hence, applicants' "Petition for Correction of Inventorship Pursuant to 37 CFR 1.48(e)" is **DISMISSED** as moot.

The application is being returned to the International Division for processing as the U.S. National Stage of the above-identified international application.

Anthony Smith
Attorney-Advisor
Office of PCT Legal Administration
Tel: (571) 272-3298
Fax: (571) 273-0459

UNITED STATES PATENT AND TRADEMARK OFFICE

UNITED STATES DEPARTMENT OF COMMERCE
United States Patent and Trademark Office
Address: COMMISSIONER FOR PATENTS
P.O. Box 1450
Alexandria, Virginia 22313-1450
www.uspto.gov

BASF Performance Products LLC
Patent Department
540 White Plains Road
P.O. Box 2005
Tarrytown, NY 10591

Mail Date: 04/20/2010

Applicant	: Rinaldo Husler	: DECISION ON REQUEST FOR
Patent Number	: 7642296	: RECALCULATION of PATENT
Issue Date	: 01/05/2010	: TERM ADJUSTMENT IN VIEW
Appliction No	: 11/578,595	: OF WYETH AND NOTICE OF INTENT TO
Filed	: 10/16/2006	: ISSUE CERTIFICATE OF CORRECTION
		:

The Request for Recalculation is **GRANTED** to the extent indicated.

The patent term adjustment has been determined to be **349** days. The USPTO will *sua sponte* issue a certificate of correction reflecting the amount of PTA days determined by the recalculation.

Prior to the issuance of the certificate of correction, the USPTO will afford patentee an opportunity to be heard and request reconsideration. Accordingly, patentee has **one month or thirty (30) days**, whichever is longer, to file a request for reconsideration of this patent term adjustment calculation. See 35 U.S.C. 154(b)(3)(B)(ii) and 37 CFR 1.322(a)(4). No extensions of time will be granted under 37 CFR 1.136.

Patentee should use document code PET.OP if electronically filing a request for reconsideration of this patent term adjustment calculation. The patentee must also include the information required by 37 CFR 1.705(b)(2) and the fee required by 37 CFR 1.18(e). If patentee does not file a timely request for reconsideration of this patent term adjustment calculation including the information required by 37 CFR 1.705(b)(2) and the fee required by 37 CFR 1.18(e), the USPTO will issue a certificate of correction reflecting the PTA determination noted above.

Patentee should be aware that in order to preserve the right to review in the United States District Court for the District of Columbia of the USPTO patent term adjustment determination, patentee must ensure that he or she also take the steps required under 35 U.S.C. 154(b)(4)(A) in a timely manner. Nothing in the request for recalculation should be construed as providing an alternative time frame for commencing a civil action under 35 U.S.C. 154(b)(4)(A).

Any questions concerning this decision should be directed to the Office of Patent Legal Administration at 571-272-7702.

UNITED STATES PATENT AND TRADEMARK OFFICE

UNITED STATES DEPARTMENT OF COMMERCE
United States Patent and Trademark Office
Address: COMMISSIONER FOR PATENTS
P.O. Box 1450
Alexandria, Virginia 22313-1450
www.uspto.gov

KENYON & KENYON LLP
ONE BROADWAY
NEW YORK, NY 10004

Mail Date: 04/21/2010

Applicant	: Roland Schmid	: DECISION ON REQUEST FOR
Patent Number	: 7609462	: RECALCULATION of PATENT
Issue Date	: 10/27/2009	: TERM ADJUSTMENT IN VIEW
Appliction No	: 11/578,620	: OF WYETH AND NOTICE OF INTENT TO
Filed	: 06/08/2007	: ISSUE CERTIFICATE OF CORRECTION
		:

The Request for Recalculation is **GRANTED** to the extent indicated.

The patent term adjustment has been determined to be **183** days. The USPTO will *sua sponte* issue a certificate of correction reflecting the amount of PTA days determined by the recalculation.

Prior to the issuance of the certificate of correction, the USPTO will afford patentee an opportunity to be heard and request reconsideration. Accordingly, patentee has **one month or thirty (30) days**, whichever is longer, to file a request for reconsideration of this patent term adjustment calculation. See 35 U.S.C. 154(b)(3)(B)(ii) and 37 CFR 1.322(a)(4). No extensions of time will be granted under 37 CFR 1.136.

Patentee should use document code PET.OP if electronically filing a request for reconsideration of this patent term adjustment calculation. The patentee must also include the information required by 37 CFR 1.705(b)(2) and the fee required by 37 CFR 1.18(e). If patentee does not file a timely request for reconsideration of this patent term adjustment calculation including the information required by 37 CFR 1.705(b)(2) and the fee required by 37 CFR 1.18(e), the USPTO will issue a certificate of correction reflecting the PTA determination noted above.

Patentee should be aware that in order to preserve the right to review in the United States District Court for the District of Columbia of the USPTO patent term adjustment determination, patentee must ensure that he or she also take the steps required under 35 U.S.C. 154(b)(4)(A) in a timely manner. Nothing in the request for recalculation should be construed as providing an alternative time frame for commencing a civil action under 35 U.S.C. 154(b)(4)(A).

Any questions concerning this decision should be directed to the Office of Patent Legal Administration at 571-272-7702.

UNITED STATES PATENT AND TRADEMARK OFFICE

Commissioner for Patents
United States Patent and Trademark Office
P.O. Box 1450
Alexandria, VA 22313-1450
www.uspto.gov
DIW Feb-09

ROBERT D. SHEDD
THOMSON LICENSING LLC
PO BOX 5312
PRINCETON NJ 08543-5312

COPY MAILED

FEB 2 6 2009

OFFICE OF PETITIONS

In re Application of :
Testin et al. :
Application Number: 11/578623 :
Filing Date: 10/16/2006 :
Attorney Docket Number: :
PU030340 :

ON PETITION

This is a decision on the petition under 37 CFR 1.137(b)[1] filed on January 9, 2009, to revive the above-identified application.

The petition is **GRANTED**.

This application became abandoned on December 12, 2008, for failure to timely submit the issue and publication fees in response to the Notice of Allowance and Fee(s) Due mailed on September 11, 2008, which set a three (3) month statutory period for reply. Notice of Abandonment was mailed on January 8, 2009.

Receipt of the fee payment on January 9, 2009, is acknowledged.

---

[1] Effective December 1, 1997, the provisions of 37 CFR 1.137(b) now provide that where the delay in reply was unintentional, a petition may be filed to revive an abandoned application or a lapsed patent pursuant to 37 CFR 1.137(b). A grantable petition filed under the provisions of 37 CFR 1.137(b) must be accompanied by:

(1) the required reply, unless previously filed. In a nonprovisional application abandoned for failure to prosecute, the required reply may be met by the filing of a continuing application. In a nonprovisional application filed on or after June 8, 1995, and abandoned for failure to prosecute, the required reply may also be met by the filing of a request for continued examination in compliance with § 1.114. In an application or patent, abandoned or lapsed for failure to pay the issue fee or any portion thereof, the required reply must be the payment of the issue fee or any outstanding balance thereof. In an application abandoned for failure to pay the publication fee, the required reply must include payment of the publication fee.

(2) the petition fee as set forth in 37 CFR 1.17(m);

(3) a statement that the entire delay in filing the required reply from the due date for the reply until the filing of a grantable petition pursuant to 37 CFR 1.137(b) was unintentional. The Director may required additional information where there is a question whether the delay was unintentional; and

(4) any terminal disclaimer (and fee as set forth in 37 CFR 1.20(d)) required pursuant to 37 CFR 1.137(c)).

The application is referred to the Office of Data Management for processing into a patent.

Telephone inquiries concerning this matter may be directed to the undersigned at (571) 272-3231.

D Wood

Douglas I. Wood
Senior Petitions Attorney
Office of Petitions

01 DEC 2006

UNITED STATES PATENT AND TRADEMARK OFFICE

Commissioner for Patents
United States Patent and Trademark Office
P.O. Box 1450
Alexandria, VA 22313-1450
www.uspto.gov

Tarolli, Sundheim, Covell & Tummino, LLP
1300 East Ninth Street, Suite 1700
Cleveland, OH 44114

In re Application of CERVI, Paul Laurence et al. Application No.: 11/578,680 PCT No.: PCT/GB04/50028 Int. Filing Date: 18 November 2004 Priority Date: 08 December 2003 Docket No.: MC1-8377 For: SAMPLE AGE MONITORING DEVICES AND METHODS	DECISION ON PETITION UNDER 37 CFR 1.137(b)

Applicants' Petition to Revive Under 37 CFR §1.137(b), filed in the above-captioned application on 17 October 2006 is **GRANTED**.

Applicants indicate that the entire delay in filing the required reply from the due date for the required reply until the filing of a grantable petition under 37 CFR 1.137(b) was unintentional, as required by 37 CFR 1.137(b)(3). The appropriate national fee and petition fee have been submitted. A terminal disclaimer is not required as the application was filed on or after 08 June 1995. Accordingly, all requirements under 37 CFR 1.137(b) have been satisfied.

A signed oath or declaration has not yet been submitted. The fee for late filing of the search fee, examination fee or oath or declaration will be charged to deposit account no. 20-0090, as authorized.

This application is being referred to the National Stage Processing Branch of the Office of PCT Operations for continued processing in accordance with this decision, including the mailing of a Notification of Missing Requirements (Form PCT/DO/EO/905) indicating that an oath or declaration in compliance with 37 CFR 1.497(a)-(b) is required.

Erin P. Thomson

Erin P. Thomson
Attorney Advisor
PCT Legal Administration

Telephone: 571-272-3292
Facsimile: 571-273-0459

UNITED STATES PATENT AND TRADEMARK OFFICE

Commissioner for Patents
United States Patent and Trademark Office
P.O. Box 1450
Alexandria, VA 22313-1450
www.uspto.gov

MYERS DAWES ANDRAS & SHERMAN, LLP
19900 MACARTHUR BLVD.
SUITE 1150
IRVINE CA 92612

COPY MAILED

JUL 18 2008

In re Application of	:	
VAN BALLEGOOIJEN, Geert A. et al.	:	
Application No. 11/578,714	:	DECISION ON PETITION
Filed: March 12, 2007	:	TO WITHDRAW
Attorney Docket No. **VER1.PAU.01.US**	:	FROM RECORD

This is a decision on the Request to Withdraw as attorney or agent of record under 37 C.F.R. § 1.36(b), filed June 27, 2008.

The request is **APPROVED**.

A grantable request to withdraw as attorney/agent of record must be signed by every attorney/agent seeking to withdraw or contain a clear indication that one attorney is signing on behalf of another/others. A request to withdraw will not be approved unless at least 30 (thirty) days would remain between the date of approval and the later of the expiration date of a time to file a response or the expiration date of the maximum time period which can be extended under 37 C.F.R. § 1.136(a).

The request was signed by Daniel Dawes on behalf of all attorneys of record who are associated with customer No. 23386. All attorneys/agents associated with the Customer Number 23386 have been withdrawn. Applicant is reminded that there is no attorney of record at this time.

All future correspondence will be directed to the first named inventor Geert Antoine Van Ballegooijen at the address indicated below.

Telephone inquiries concerning this decision should be directed to Tredelle Jackson at 571-272-2783.

Tredelle D. Jackson
Paralegal Specialist
Office of Petitions

cc: **GEERT ANTOINE VAN BALLEGOOIJEN**
BERGSTRAAT 37
NL 4261 BW WIJK EN AALBURG
THE NETHERLANDS

UNITED STATES PATENT AND TRADEMARK OFFICE

UNITED STATES DEPARTMENT OF COMMERCE
United States Patent and Trademark Office
Address: COMMISSIONER FOR PATENTS
P.O. Box 1450
Alexandria, Virginia 22313-1450
www.uspto.gov

NIXON & VANDERHYE, PC
901 NORTH GLEBE ROAD, 11TH FLOOR
ARLINGTON, VA 22203

Mail Date: 07/07/2010

Applicant	: Warren John Smith	: DECISION ON REQUEST FOR
Patent Number	: 7642372	: RECALCULATION of PATENT
Issue Date	: 01/05/2010	: TERM ADJUSTMENT IN VIEW
Application No	: 11/578,718	: OF WYETH AND NOTICE OF INTENT TO
Filed	: 09/13/2007	: ISSUE CERTIFICATE OF CORRECTION
		:

The Request for Recalculation is **GRANTED** to the extent indicated.

The patent term adjustment has been determined to be **214** days. The USPTO will *sua sponte* issue a certificate of correction reflecting the amount of PTA days determined by the recalculation.

Prior to the issuance of the certificate of correction, the USPTO will afford patentee an opportunity to be heard and request reconsideration. Accordingly, patentee has **one month or thirty (30) days**, whichever is longer, to file a request for reconsideration of this patent term adjustment calculation. See 35 U.S.C. 154(b)(3)(B)(ii) and 37 CFR 1.322(a)(4). No extensions of time will be granted under 37 CFR 1.136.

Patentee should use document code PET.OP if electronically filing a request for reconsideration of this patent term adjustment calculation. The patentee must also include the information required by 37 CFR 1.705(b)(2) and the fee required by 37 CFR 1.18(e). If patentee does not file a timely request for reconsideration of this patent term adjustment calculation including the information required by 37 CFR 1.705(b)(2) and the fee required by 37 CFR 1.18(e), the USPTO will issue a certificate of correction reflecting the PTA determination noted above.

Patentee should be aware that in order to preserve the right to review in the United States District Court for the District of Columbia of the USPTO patent term adjustment determination, patentee must ensure that he or she also take the steps required under 35 U.S.C. 154(b)(4)(A) in a timely manner. Nothing in the request for recalculation should be construed as providing an alternative time frame for commencing a civil action under 35 U.S.C. 154(b)(4)(A).

Any questions concerning this decision should be directed to the Office of Patent Legal Administration at 571-272-7702.

UNITED STATES PATENT AND TRADEMARK OFFICE

Commissioner for Patents
United States Patent and Trademark Office
P.O. Box 1450
Alexandria, VA 22313-1450
www.uspto.gov

08 NOV 2006

Gary M. Nath
Nath & Associates, PLLC
112 South West Street
Alexandria, VA 22314

In re Application of	:	
FEINLEIB	:	
Application No.: 11/578,727	:	
PCT No.: PCT/IL04/00070	:	DECISION ON PETITION
Int. Filing Date: 25 January 2004	:	
Priority Date: None	:	UNDER 37 CFR 1.137(b)
Atty. Docket No.: 27744U	:	
For: HYDRAULICALLY DRIVEN PUMP-INJECTOR	:	
FOR INTERNAL COMBUSTION ENGINES	:	
WITH HYDROCHEMICAL RETURN DEVICE	:	
OF THE POWER PISTON	:	

This decision is in response to applicant's "Petition to Revive Unintentionally Abandoned Application Under 37 CFR § 1.137(b)" filed 18 October 2006.

BACKGROUND

On 25 January 2004, applicant filed international application PCT/IL04/00070. The thirty-month period for paying the basic national fee in the United States expired at midnight on 25 July 2006.

On 18 October 2006, applicant filed the present petition to revive.

DISCUSSION

A petition under 37 CFR 1.137(b) requesting that the application be revived on the grounds of unintentional abandonment must be accompanied by (1) the required reply, (2) the petition fee required by law, (3) a statement that the, "entire delay in filing the required reply from the due date for the reply until the filing of a grantable petition pursuant to this paragraph was unintentional" and (4) any terminal disclaimer and fee pursuant to 37 CFR 1.137(c) (where required). Applicant has satisfied items 1-3. Item 4 does not apply.

However, it is not possible to grant applicant's petition at this time. In the United States of America a patent application can only be filed by the inventor. In the present case, the published international application identifies Mr. Boris Feinleib as an applicant only. A search of the electronic file on the World Intellectual Property Organization intellectual property digital library does not indicate that a PCT Rule 92bis change was made in the case. Absent a showing from applicant that Mr. Feinleib was an applicant/inventor for the international application, entry

into the U.S. national stage under 35 U.S.C. 371 is not possible.

CONCLUSION

For the reasons stated above, applicant's petition under 37 CFR 1.137(b) is **DISMISSED**.

If reconsideration on the merits of this petition is desired, a proper response must be filed within **TWO (2) MONTHS** from the mail date of this decision. Any reconsideration request should include a cover letter entitled "Renewed Petition Under 37 CFR 1.137(b)." No additional petition fee is required.

Please direct further correspondence with respect to this matter to the Mail Stop PCT, Commissioner for Patents, Office of PCT Legal Administration, P.O. Box 1450, Alexandria, Virginia 22313-1450, with the contents of the letter marked to the attention of the Office of PCT Legal Administration.

Derek A. Putonen
Attorney Advisor
Office of PCT Legal Administration
Tel: (571) 272-3294
Fax: (571) 273-0459

0 5 MAR 2007

UNITED STATES PATENT AND TRADEMARK OFFICE

Commissioner for Patents
United States Patent and Trademark Office
P.O. Box 1450
Alexandria, VA 22313-1450
www.uspto.gov

Gary M. Nath
Nath & Associates, PLLC
112 South West Street
Alexandria, VA 22314

In re Application of FEINLEIB Application No.: 11/578,727 PCT No.: PCT/IL04/00070 Int. Filing Date: 25 January 2004 Priority Date: None Atty. Docket No.: 27744U For: HYDRAULICALLY DRIVEN PUMP-INJECTOR FOR INTERNAL COMBUSTION ENGINES WITH HYDROCHEMICAL RETURN DEVICE OF THE POWER PISTON	DECISION ON RENEWED PETITION UNDER 37 CFR 1.137(b)

The International Bureau (IB) has confirmed that an error occurred in the publication of the international application as to the status of Boris Feinleib and that he is an applicant/inventor.

Therefore, the renewed petition to revive under 37 CFR 1.137(b) filed 08 January 2007 in the above-captioned application is hereby **GRANTED** as follows:

Applicant's statement that "the entire delay in filing the required reply from the due date for the required reply until the filing of a grantable petition under 37 CFR 1.137(b) was unintentional" and the prompt filing of the petition satisfies the requirement of 37 CFR 1.137(b)(3).

A review of the application file reveals that applicant has now provided payment of the full, U.S. Basic National Fee. Therefore, the request to revive the application abandoned under 35 U.S.C. 371(d) is granted as to the National stage in the United States of America.

The application has an international filing date of 25 January 2004 under 35 U.S.C. 363 and will be given a date of **18 October 2006** under 35 U.S.C. 371(c)(1), (c)(2) and (c)(4).

This application is being returned to the United States Designated/Elected Office (DO/EO/US) for treatment in accordance with this decision.

Derek A. Putonen
Attorney Advisor
Office of PCT Legal Administration
Tel: (571) 272-3294
Fax: (571) 273-0459

UNITED STATES PATENT AND TRADEMARK OFFICE

Commissioner for Patents
United States Patent and Trademark Office
P.O. Box 1450
Alexandria, VA 22313-1450
www.uspto.gov

19 DEC 2006

Guy Perry
Skadden, Arps, Slate, Meagher & Flom, LLP
Four Times Square
New York, NY 10036

In re Application of	:	
KLEIN	:	
Application No.: 11/578,741	:	
PCT No.: PCT/US04/33446	:	DECISION ON PETITION
Int. Filing Date: 07 October 2004	:	
Priority Date: 10 October 2003	:	UNDER 37 CFR 1.137(b)
Atty. Docket No.: MK-001 PCT US	:	
For: MODULAR SHOE SYSTEM	:	

The petition to revive under 37 CFR 1.137(b) filed 16 October 2006 in the above-captioned application is hereby **GRANTED** as follows:

Applicant's statement that "the entire delay in filing the required reply from the due date for the required reply until the filing of a grantable petition under 37 CFR 1.137(b) was unintentional" and the prompt filing of the petition satisfies the requirement of 37 CFR 1.137(b)(3).

A review of the application file reveals that applicant has now provided payment of the full, U.S. Basic National Fee. Therefore, the request to revive the application abandoned under 35 U.S.C. 371(d) is granted as to the National stage in the United States of America. Further, a review of the application file reveals that all of the requirements of 35 U.S.C. 371 for entry into the national stage in the United States were satisfied with the filing of an executed declaration of the inventor.

The application has an international filing date of 07 October 2004 under 35 U.S.C. 363 and will be given a date of **13 November 2006** under 35 U.S.C. 371(c)(1), (c)(2) and (c)(4).

This application is being returned to the United States Designated/Elected Office (DO/EO/US) for treatment in accordance with this decision.

Derek A. Putonen
Attorney Advisor
Office of PCT Legal Administration
Tel: (571) 272-3294
Fax: (571) 273-0459

30 JAN 2007

UNITED STATES PATENT AND TRADEMARK OFFICE

Commissioner for Patents
United States Patent and Trademark Office
P.O. Box 1450
Alexandria, VA 22313-1450
www.uspto.gov

Guy Perry
Skadden, Arps, Slate, Meagher & Flom, LLP
Four Times Square
New York, NY 10036

In re Application of	:	
KLEIN	:	SUPPLEMENTAL
Application No.: 11/578,741	:	
PCT No.: PCT/US04/33446	:	DECISION ON PETITION
Int. Filing Date: 07 October 2004	:	
Priority Date: 10 October 2003	:	UNDER 37 CFR 1.137(b)
Atty. Docket No.: MK-001 PCT US	:	
For: MODULAR SHOE SYSTEM	:	

In a decision mailed 19 December 2006, the petition to revive under 37 CFR 1.137(b) filed 16 October 2006 in the above-captioned application was granted.

The decision incorrectly accorded a date of 13 November 2006 under 35 U.S.C. 371(c)(1), (c)(2) and (c)(4). A review of the filed declaration finds that it does not list the citizenship of the inventor and therefore is not in compliance with 37 CFR 1.497. That part of the decision is hereby **VACATED**. The petition for revival remains granted as to the late payment of the full, U.S. Basic National Fee.

This application is being returned to the United States Designated/Elected Office (DO/EO/US) for treatment in accordance with this decision; namely the issuance of a Notification of Missing Requirements (Form PCT/DO/EO/905).

Derek A. Putonen
Attorney Advisor
Office of PCT Legal Administration
Tel: (571) 272-3294
Fax: (571) 273-0459

UNITED STATES PATENT AND TRADEMARK OFFICE

COMMISSIONER FOR PATENTS
UNITED STATES PATENT AND TRADEMARK OFFICE
P.O. BOX 1450
ALEXANDRIA, VA 22313-1450
www.uspto.gov

08 NOV 2006

THE FIRM OF KARL F ROSS
5676 RIVERDALE AVENUE
PO BOX 900
RIVERDALE (BRONX), NY 10471-0900

In re Application of HERBRECHTSMEIER et al	:	
U.S. Application No.: 11/578,758	:	
PCT Application No.: PCT/EP2004/006908	:	
Int. Filing Date: 25 June 2004	:	
Priority Date Claimed: 27 June 2003	:	DECISION
Attorney Docket No.: 23519	:	
For: DEVICE AND METHOD FOR DRAWING A SAMPLE AND ANALYZING BODY FLUIDS	:	

This is in response to applicant's "Petition for Revival of an International Application for Patent Designating the U.S. Abandoned Unintentionally Under 37 CFR 1.137(b)" filed 16 October 2006.

BACKGROUND

On 25 June 2004, applicant filed international application PCT/EP2004/006908, which claimed priority of an earlier European Patent Office application filed 27 June 2003. A copy of the international application was communicated to the USPTO from the International Bureau on 06 January 2005. The thirty-month period for paying the basic national fee in the United States expired on 27 December 2005.

International application PCT/EP2004/006908 became abandoned as to the United States for failure to timely pay the basic national fee.

On 16 October 2006, applicant filed the present petition under 37 CFR 1.137(b).

DISCUSSION

Under 37 CFR 1.137(b), a petition requesting that an application be revived on the grounds of unintentional abandonment must be accompanied by: (1) the required reply unless previously filed, (2) the petition fee as set forth in 37 CFR 1.17(m), (3) a statement that the entire

delay in filing the required reply from the due date for the reply until the filing of a grantable petition was unintentional, and (4) a terminal disclaimer if the application was filed before 08 June 1995.

With regard to item (1), applicant has provided the required reply under 35 U.S.C. 371.

With regard to item (2), applicant has provided the required petition fee.

With regard to item (3), applicant has provided the required statement.

With regard to item (4), because the international application was filed after 08 June 1995, no terminal disclaimer is required.

CONCLUSION

For the reasons above, the petition under 37 CFR 1.137(b) is GRANTED.

The application has an International Filing Date under 35 U.S.C. 363 of 25 June 2004, and a date under 35 U.S.C. 371(c)(1), (c)(2), and (c)(4) of 16 October 2006.

This application is being forwarded to the United States Designated/Elected Office (DO/EO/US) for further processing in accordance with this decision.

Bryan Lin

Bryan Lin
PCT Legal Examiner
PCT Legal Office

Telephone: 571-272-3303
Facsimile: 571-273-0459

UNITED STATES PATENT AND TRADEMARK OFFICE

Commissioner for Patents
United States Patent and Trademark Office
P.O. Box 1450
Alexandria, VA 22313-1450
www.uspto.gov

13 NOV 2006

Gary M. Nath
Nath & Associates, PLLC
112 South West Street
Alexandria, VA 22314

In re Application of	:	
HUSS, et al.	:	
U.S. Application No.: 11/578,777	:	DECISION ON PETITION
PCT No.: PCT/IL03/00747	:	
Int. Filing Date: 15 September 2003	:	UNDER 37 CFR 1.137(b)
Priority Date: None	:	
Attorney Docket No.: 27743U	:	
For: FUEL INJECTION SYSTEM FOR INTERNAL	:	
COMBUSTION ENGINE	:	

The petition to revive under 37 CFR 1.137(b) filed 18 October 2006 in the above-captioned application is hereby **GRANTED** as follows:

Applicant's statement that "the entire delay in filing the required reply from the due date for the required reply until the filing of a grantable petition under 37 CFR 1.137(b) was unintentional" and the prompt filing of the petition satisfies the requirement of 37 CFR 1.137(b)(3).

A review of the application file reveals that applicant has now provided payment of the full, U.S. Basic National fee and the requirements of 37 CFR 1.137(b) have been satisfied. Therefore, the request to revive the application abandoned under 35 U.S.C. 371(d) is granted as to the National stage in the United States of America.

This application is being forwarded to the United States Designated/Elected Office (US/DO/EO) for continued processing including the issuance of a Notification of Missing Requirements (Form PCT/DO/EO/905) indicating that a compliant, executed oath or declaration of the inventors is required.

Derek A. Putonen
Attorney Advisor
Office of PCT Legal Administration
Tel: (571) 272-3294
Fax: (571) 273-0459

17 NOV 2006

UNITED STATES PATENT AND TRADEMARK OFFICE

Commissioner for Patents
United States Patent and Trademark Office
P.O. Box 1450
Alexandria, VA 22313-1450
www.uspto.gov

NATH & ASSOCIATES
112 South West Street
Alexandria VA 22314

In re Application of	:	
KONDRASHOV	:	
Application No.: 11/578,799	:	DECISION ON
PCT No.: PCT/RU2003/000343	:	
Int. Filing Date: 01 August 2003	:	PETITION UNDER
Priority Date: None	:	
Attorney Docket No.: 27631U	:	37 CFR 1.137(b)
For: METHOD FOR CONVERTING LOW-GRADE	:	
ENERGY AND A FUELLESS JET ENGINE	:	
FOR ITS IMPLEMENTATION	:	

This decision is in response to applicants' submission filed 18 October 2006.

BACKGROUND

On 01 August 2003, applicant filed international application PCT/RU2003/000343 which designated the U.S. and did not claim a priority date. A copy of the international application was communicated to the United States Patent and Trademark Office (USPTO) from the International Bureau on 10 February 2005. The thirty-month period for paying the basic national fee in the United States expired at midnight on 01 February 2006.

On 18 October 2006, applicant filed a transmittal letter for entry into the national stage in the United States, which was accompanied by, *inter alia*, the Basic National Fee, a declaration of the inventor, a translation of the international application into English, an assertion of small entity status, and a petition under 37 CFR 1.137(b) to revive the application.

DISCUSSION

A petition to revive the present application under 37 CFR 1.137(b) must include:
(1) The required reply;
(2) The petition fee;
(3) A statement that the entire delay in filing the required reply from the due date for the reply until the filing of a grantable petition was unintentional.

As to item (1), applicant submitted the basic national fee on 18 October 2006.

As to item (2), applicant submitted the petition fee on 18 October 2006.

As to item (3), the required statement has been provided.

A review of the application file reveals that, with the filing of the present petition and accompanying papers, a proper response has been submitted and all of the requirements of 37 CFR 1.137(b) for revival have been satisfied and revival is therefore appropriate.

Declaration of Inventors

The declaration of inventors filed 18 October 2006 is in compliance with 37 CFR 1.497(a)-(b). The surcharge for a small entity of $65 under 37 CFR 1.492(h) for filing any of the search fee, the examination fee, or the oath or declaration after the date of the commencement of the national stage has been charged to Deposit Account 14-0112.

Translation

The processing fee of $130 under 37 CFR 1.492(i) for providing the translation more than thirty months from the priority date has been charged to Deposit Account 14-0112.

CONCLUSION

The petition under 37 CFR 1.137(b) is **GRANTED** for the reasons set forth above.

Please direct further correspondence with respect to this matter to Mail Stop PCT, Commissioner for Patents, Office of PCT Legal Administration, P.O. Box 1450, Alexandria, Virginia 22313-1450, with the contents of the letter marked to the attention of the Office of PCT Legal Administration.

This application is being forwarded to the National Stage Processing Branch of the Office of PCT Operations to continue national stage processing of the application.

Daniel Stemmer
Legal Examiner
PCT Legal Affairs
Office of Patent Cooperation Treaty
Legal Administration
Telephone: (571) 272-3301
Facsimile: (571) 273-0459

11/17/2006 SBASHEIR 00000004 140112 11578799
Sale Ref: 00000004 DA#: 140112 11578799
01 FC:2617 65.00 DA
02 FC:1618 130.00 DA

UNITED STATES PATENT AND TRADEMARK OFFICE

Commissioner for Patents
United States Patent and Trademark Office
P.O. Box 1450
Alexandria, VA 22313-1450
www.uspto.gov

07 NOV 2006

Gregory D. DeGrazia
Howard and Howard Attorney, PC
39400 Woodward Avenue, Suite 101
Bloomfield Hills, MI 48304-5151

In re Application of	:	
LADOUCEUR	:	
Application No.: 11/578,807	:	
PCT No.: PCT/US03/37534	:	DECISION ON PETITION
Int. Filing Date: 24 November 2003	:	
Priority Date: 05 December 2002	:	UNDER 37 CFR 1.137(b)
Atty. Docket No.: 60152-1265	:	
For: SELF-THREADING FEMALE FASTENERS AND	:	
METHOD OF FORMING SAME	:	

The petition to revive under 37 CFR 1.137(b) filed 18 October 2006 in the above-captioned application is hereby **GRANTED** as follows:

Applicant's statement that "the entire delay in filing the required reply from the due date for the required reply until the filing of a grantable petition under 37 CFR 1.137(b) was unintentional" and the prompt filing of the petition satisfies the requirement of 37 CFR 1.137(b)(3).

A review of the application file reveals that applicant has now provided payment of the full, U.S. Basic National fee and the requirements of 37 CFR 1.137(b) have been satisfied. Therefore, the request to revive the application abandoned under 35 U.S.C. 371(d) is granted as to the National stage in the United States of America.

This application is being forwarded to the United States Designated/Elected Office (US/DO/EO) for continued processing including the issuance of a Notification of Missing Requirements (Form PCT/DO/EO/905) indicating that a compliant, executed oath or declaration of the inventors is required.

Derek A. Putonen
Attorney Advisor
Office of PCT Legal Administration
Tel: (571) 272-3294
Fax: (571) 273-0459

UNITED STATES PATENT AND TRADEMARK OFFICE

Commissioner for Patents
United States Patent and Trademark Office
P.O. Box 1450
Alexandria, VA 22313-1450
www.uspto.gov

13 NOV 2006

Davidson, Davidson & Kappel, LLC
485 Seventh Avenue, 14th Floor
New York, New York 10018

In re Application of	:	
DAEUBLER, et al.	:	
Application No.: 11/578,862	:	DECISION ON PETITION
PCT No.: PCT/DE05/00333	:	UNDER 37 CFR 1.137(b)
Int. Filing Date: 28 February 2005	:	
Priority Date: 03 March 2004	:	
Attorney Docket No.: 5038.1043	:	
For: RING STRUCTURE WITH A METAL DESIGN HAVING A RUN-IN LINING		

The petition to revive under 37 CFR 1.137(b) filed 18 October 2006 in the above-captioned application is hereby **GRANTED** as follows:

Applicant's statement that the "the entire delay in filing the required reply from the due date for the reply until the filing of a grantable petition under 37 CFR 1.137(b) was unintentional" meets the requirements of 37 CFR 1.137(b)(3).

A review of the application file reveals that applicant has submitted the basic national fee and the requirements of 37 CFR 1.137(b) have been satisfied. Therefore, the request to revive the application abandoned under 35 U.S.C. 371(d) is granted as to the National stage in the United States of America.

This application is being returned to the United States Designated/Elected Office for processing in accordance with this decision.

Anthony Smith

Anthony Smith
Attorney-Advisor
Office of PCT Legal Administration
Tel: (571) 272-3298
Fax: (571) 273-0459

UNITED STATES PATENT AND TRADEMARK OFFICE

Commissioner for Patents
United States Patent and Trademark Office
P.O. Box 1450
Alexandria, VA 22313-1450
www.uspto.gov

2 1 APR 2008

Davidson, Davidson & Kappel, LLC
485 7th Avenue
14th Floor
New York NY 10018

In re Application of DAEUBLER, et al. Application No.: 11/578,862 PCT No.: PCT/DE05/00333 Int. Filing Date: 28 February 2005 Priority Date: 03 March 2004 Attorney Docket No.: 5038.1043 For: RING STRUCTURE WITH A METAL DESIGN HAVING A RUN-IN LINING	COMMUNICATION REGARDING SUBMISSION UNDER 37 CFR 1.42

This communication is issued in response to the declaration filed 12 October 2007 which is being treated as a Submission under 37 CFR 1.42. No petition fee is required.

BACKGROUND

On 28 February 2005, applicants filed international application PCT/DE05/00333. The application claimed a priority date of 03 March 2004 and designated the United States. On 15 September 2005, the International Bureau ("IB") communicated a copy of the international application to the United States Patent And Trademark Office ("USPTO"). The deadline for payment of the basic national fee was 05 September 2006 (thirty months from the priority date).

On 18 October 2006, applicants filed a transmittal letter for entry into the national stage in the United States accompanied by, among other materials, payment of the basic national fee, a copy of the international application, and a petition to revive under 37 CFR 1.137(b). The petition to revive under 37 CFR 1.137(b) was granted in a decision dated 13 November 2006.

On 18 June 2007, the United States Designated/Elected Office (DO/EO/US) mailed a Notification of Missing Requirements under 35 U.S.C. 371 (Form PCT/DO/EO/905) indicating that oath or declaration executed by the inventor and an English translation of the international application was required. The notification set a two-month time limit in which to respond. The notification set a two (2) month period for response.

On 12 October 2007, applicants filed a declaration executed by: the joint inventors (Ulrike Hain and Werner Humhauser); Horst Mueller-Wittek (legal representative of incapacitated heir of Manfred A. Daeubler); and Renate Mendritzki (heir of deceased inventor). This declaration is considered herein under 37 CFR 1.42 and 1.497.

DISCUSSION

37 CFR 1.42 *When the Inventor is Dead*, states, in part:

> In case of the death of the inventor, the legal representative (executor, administrator, etc.) of the deceased inventor may make the necessary oath or declaration, and apply for and obtain the patent.

Section 409.01(a) of the Manual of Patent Examining Procedure (MPEP) states that the application can also be executed by all of the heirs of the deceased inventor, where no legal representative has been appointed or is required to be appointed by law.

37 CFR 1.497(b)(2) states the following:

> (2) If the person making the oath or declaration or any supplemental oath or declaration is not the inventor (§§ 1.42, 1.43, or § 1.47) the oath or declaration shall state the relationship of the person to the inventor, and, upon information and belief, the facts which the inventor would have been required to state. If the person signing is the legal representative of a deceased inventor, the oath or declaration shall also state that the person is a legal representative and the citizenship, residence, and mailing address of the legal representative.

Pursuant to 37 CFR 1.497(b)(2), the citizenship for both the deceased inventor and the legal representative must be identified on the declaration (as well as the mailing address and residence information of the legal representative and all other information required under 37 CFR 1.497).

Here, the declaration filed 12 October 2007 includes the required citizenship, residence, and mailing address information for the surviving inventors, the deceased inventor, and the person(s) signing the declaration on behalf of the deceased inventor. However, the persons (Dieter Daeubler and Renate Mendritzki) listed on the declaration are identified only as "heirs." Neither the declaration, nor any materials submitted therewith, state that Dieter Daeubler and Renate Mendritzki are "all of the heirs" of the deceased inventor. Before the declaration may be accepted under 37 CFR 1.42, applicants must provide an acceptable statement and/or supporting documentation confirming that Dieter Daeubler and Renate Mendritzki are "all of the heirs" of the deceased inventor.

CONCLUSION

For the reasons discussed above, the request for status under 37 CFR 1.42 is **DISMISSED** without prejudice.

Applicants have **TWO (2) MONTHS** from the mailing date of this communication to submit a proper response under 37 CFR 1.42 and 37 CFR 1.497. Failure to provide a proper and timely response will result in abandonment.

A proper response must include an adequate statement and/or supporting documentation confirming that Dieter Daeubler and Renate Mendritzki are "all of the heirs" of the deceased inventor.

Any further correspondence with respect to this matter should be addressed to Mail Stop PCT, Commissioner for Patents, P.O. Box 1450, Alexandria, Virginia 22313-1450, with the contents of the letter marked to the attention of the Office of PCT Legal Administration.

Anthony Smith
Attorney-Advisor
Office of PCT Legal Administration
Tel: (571) 272-3298
Fax: (571) 273-0459

UNITED STATES PATENT AND TRADEMARK OFFICE

Commissioner for Patents
United States Patent and Trademark Office
P.O. Box 1450
Alexandria, VA 22313-1450
www.uspto.gov

0 9 DEC 2008

Davidson, Davidson & Kappel, LLC
485 7th Avenue
14th Floor
New York NY 10018

In re Application of DAEUBLER, et al. Application No.: 11/578,862 PCT No.: PCT/DE05/00333 Int. Filing Date: 28 February 2005 Priority Date: 03 March 2004 Attorney Docket No.: 5038.1043 For: RING STRUCTURE WITH A METAL DESIGN HAVING A RUN-IN LINING	COMMUNICATION REGARDING SUBMISSION UNDER 37 CFR 1.42

In a communication mailed by this Office on 21 April 2008, the declaration filed on behalf of deceased inventor Manfred DAEUBLER was dismissed for failure to satisfy 37 CFR 1.42 and 1.497. Specifically, the declaration did not confirm that the two heirs executing the declaration on behalf of the deceased inventor were the deceased inventor's sole heirs.

On 12 June 2008, applicants filed a response to the previous communication that included a statement that "Dieter Daeubler and Renate Mendritzki are all of the heirs of the deceased inventor Manfred Daeubler."

The 12 June 2008 submission satisfies the requirements set forth in the previous Communication. The request for status under 37 CFR 1.42 is therefore appropriately **GRANTED**.

The submission of the declaration executed by the heirs of the deceased inventor is hereby construed as an indication that no legal representative of the deceased's estate has been appointed and that no legal representative is required by applicable law to be appointed. If this interpretation is incorrect, applicant is required to promptly notify the Office of such and to submit a declaration properly executed by the legal representative of the deceased inventor in response to this decision.

The application will be forwarded to the National Stage Processing Branch of the Office of PCT Operations for further processing in accordance with this decision. The date under 35 U.S.C. 371(c)(1), (c)(2), and (c)(4) is 12 October 2007.

Anthony Smith
Attorney-Advisor
Office of PCT Legal Administration
Tel: (571) 272-3298
Fax: (571) 273-0459

UNITED STATES PATENT AND TRADEMARK OFFICE

UNITED STATES DEPARTMENT OF COMMERCE
United States Patent and Trademark Office
Address: COMMISSIONER FOR PATENTS
P.O. Box 1450
Alexandria, Virginia 22313-1450
www.uspto.gov

BAKER & DANIELS LLP
300 NORTH MERIDIAN STREET
SUITE 2700
INDIANAPOLIS, IN 46204

Mail Date: 04/29/2010

Applicant	: Antonio Carreras Garcia	: DECISION ON REQUEST FOR
Patent Number	: 7637769	: RECALCULATION of PATENT
Issue Date	: 12/29/2009	: TERM ADJUSTMENT IN VIEW
Application No	: 11/578,863	: OF WYETH AND NOTICE OF INTENT TO
Filed	: 08/01/2007	: ISSUE CERTIFICATE OF CORRECTION
		:

The Request for Recalculation is **GRANTED** to the extent indicated.

The patent term adjustment has been determined to be **0** days. The USPTO will *sua sponte* issue a certificate of correction reflecting the amount of PTA days determined by the recalculation.

Prior to the issuance of the certificate of correction, the USPTO will afford patentee an opportunity to be heard and request reconsideration. Accordingly, patentee has **one month or thirty (30) days**, whichever is longer, to file a request for reconsideration of this patent term adjustment calculation. See 35 U.S.C. 154(b)(3)(B)(ii) and 37 CFR 1.322(a)(4). No extensions of time will be granted under 37 CFR 1.136.

Patentee should use document code PET.OP if electronically filing a request for reconsideration of this patent term adjustment calculation. The patentee must also include the information required by 37 CFR 1.705(b)(2) and the fee required by 37 CFR 1.18(e). If patentee does not file a timely request for reconsideration of this patent term adjustment calculation including the information required by 37 CFR 1.705(b)(2) and the fee required by 37 CFR 1.18(e), the USPTO will issue a certificate of correction reflecting the PTA determination noted above.

Patentee should be aware that in order to preserve the right to review in the United States District Court for the District of Columbia of the USPTO patent term adjustment determination, patentee must ensure that he or she also take the steps required under 35 U.S.C. 154(b)(4)(A) in a timely manner. Nothing in the request for recalculation should be construed as providing an alternative time frame for commencing a civil action under 35 U.S.C. 154(b)(4)(A).

Any questions concerning this decision should be directed to the Office of Patent Legal Administration at 571-272-7702.

2 9 FEB 2008

UNITED STATES PATENT AND TRADEMARK OFFICE

Commissioner for Patents
United States Patent and Trademark Office
P.O. Box 1450
Alexandria, VA 22313-1450
www.uspto.gov

PROSKAUER ROSE LLP
ONE INTERNATIONAL PLACE
BOSTON MA 02110

In re Application of	:	
GARCIA-MARTINEZ	:	
Application No.: 11/578,869	:	
PCT No.: PCT/US2005/014256	:	DECISION
Int. Filing Date: 25 April 2005	:	
Priority Date: 23 April 2004	:	
Attorney's Docket No.: RIV-001	:	
For: MESOSTRUCTURED ZEOLITIC MATERIALS,	:	
AND METHODS OF MAKING AND USING	:	
THE SAME	:	

This decision is in response to applicant's "REQUEST FOR CORRECTED FILING RECEIPT" filed 30 July 2007.

BACKGROUND

On 25 April 2005, applicant filed international application PCT/US2005/014256, which designated the United States and claimed a priority date of 23 April 2004. A copy of the international application was communicated to the USPTO from the International Bureau on 23 March 2006. The thirty-month period for paying the basic national fee in the United States expired at midnight on 23 October 2006.

On 20 October 2006, applicant filed a submission for entry into the national stage in the United States which was accompanied by, *inter alia*, the U.S. Basic National Fee, a declaration of the inventor, and a preliminary amendment.

On 27 June 2007, the United States Designated/Elected Office (DO/EO/US) mailed a NOTICE OF ACCEPTANCE OF APPLICATION UNDER 35 U.S.C. 371 AND 37 CFR 1.495 (Form PCT/DO/EO/903) indicating the 35 U.S.C. 371(c)(1), (c)(2), and (c)(4) date as 20 October 2006.

On 30 July 2007, applicant submitted the instant "REQUEST FOR CORRECTED FILING RECEIPT" requesting that U.S. application number 10/830,714 filed 23 April 2004 (the '714 application) be added to the "Domestic Priority" data section of the Filing Receipt.

DISCUSSION

In order for an application to claim the benefit of a prior-filed copending non-provisional application, the application must contain or be amended to contain a reference to each such prior-filed application indicating the relationship (i.e., continuation, divisional, or continuation-in-part) of the applications. 37 CFR 1.78(a)(2)(i). Here, the preliminary amendment filed 20 October 2006 states that the international application "claims the benefit of and priority to" the '714 application but fails to indicate the relationship between the applications.

Applicant is entitled to claim benefit under 35 U.S.C. 120 and 365(c) of the filing date of the '714 application for the common subject matter, since this application and the instant application are copending. However, this reference must be submitted within the later of four months from the actual filing date of this application or sixteen months from the filing date of the '714 application. 37 CFR 1.78(a)(2)(ii). Applicant may file a petition to accept an unintentionally delayed claim under 37 CFR 1.78(a)(3) for the benefit of the '714 application.

CONCLUSION

For the reasons set forth above, applicants' request for a corrected filing receipt is **REFUSED**.

Any further correspondence with respect to this matter may be filed electronically via EFS-Web or if mailed should be addressed to Mail Stop PCT, Commissioner for Patents, Office of PCT Legal Administration, P.O. Box 1450, Alexandria, Virginia 22313-1450, with the contents of the letter marked to the attention of the Office of PCT Legal Administration.

/Daniel Stemmer/

Daniel Stemmer
Legal Examiner
PCT Legal Affairs
Office of Patent Cooperation Treaty
Legal Administration
Telephone: (571) 272-3301
Facsimile: (571) 273-0459

1 4 MAY 2010

UNITED STATES PATENT AND TRADEMARK OFFICE

Commissioner for Patents
United States Patent and Trademark Office
P.O. Box 1450
Alexandria, VA 22313-1450
www.uspto.gov

PROSKAUER ROSE LLP
ONE INTERNATIONAL PLACE
BOSTON MA 02110

In re Application of	:	
GARCIA-MARTINEZ	:	
Application No.: 11/578,869	:	
PCT No.: PCT/US2005/014256	:	DECISION
Int. Filing Date: 25 April 2005	:	
Priority Date: 23 April 2004	:	
Attorney's Docket No.: RIV-001	:	
For: MESOSTRUCTURED ZEOLITIC MATERIALS,	:	
AND METHODS OF MAKING AND USING	:	
THE SAME	:	

This decision is in response to applicant's "REQUEST FOR CORRECTED FILING RECEIPT" filed 01 May 2008.

BACKGROUND

On 25 April 2005, applicant filed international application PCT/US2005/014256, which designated the United States and claimed a priority date of 23 April 2004. A copy of the international application was communicated to the USPTO from the International Bureau on 23 March 2006. The thirty-month period for paying the basic national fee in the United States expired at midnight on 23 October 2006.

On 20 October 2006, applicant filed a submission for entry into the national stage in the United States which was accompanied by, *inter alia*, the U.S. Basic National Fee, a declaration of the inventor, and a preliminary amendment.

On 27 June 2007, the United States Designated/Elected Office (DO/EO/US) mailed a NOTICE OF ACCEPTANCE OF APPLICATION UNDER 35 U.S.C. 371 AND 37 CFR 1.495 (Form PCT/DO/EO/903) indicating the 35 U.S.C. 371(c)(1), (c)(2), and (c)(4) date as 20 October 2006.

On 30 July 2007, applicant submitted a "REQUEST FOR CORRECTED FILING

RECEIPT" requesting that U.S. application number 10/830,714 filed 23 April 2004 (the '714 application) be added to the "Domestic Priority" data section of the Filing Receipt.

On 29 February 2008, a decision was mailed refusing applicant's request for corrected filing receipt. Specifically, it was noted that the relationship to the '714 application had not been specified.

On 01 May 2008, applicant filed a "RENEWED REQUEST FOR CORRECTED FILING RECEIPT".

DISCUSSION

The renewed request for corrected filing receipt indicates that the instant application is a Continuation-in-Part of the '714 application and correctly notes that this information was contained in the Application Data Sheet (ADS) filed 20 October 2006, as required by 37 CFR 1.78(a)(2).

CONCLUSION

For the reasons set forth above, applicant's request for a corrected filing receipt is **GRANTED**.

Any further correspondence with respect to this matter may be filed electronically via EFS-Web selecting the document description "Petition for review and processing by the PCT Legal Office" or by mail addressed to Mail Stop PCT, Commissioner for Patents, Office of PCT Legal Administration, P.O. Box 1450, Alexandria, Virginia 22313-1450, with the contents of the letter marked to the attention of the Office of PCT Legal Administration.

/Daniel Stemmer/

Daniel Stemmer
Legal Examiner
PCT Legal Affairs
Office of Patent Cooperation Treaty
Legal Administration
Telephone: (571) 272-3301

UNITED STATES PATENT AND TRADEMARK OFFICE

COMMISSIONER FOR PATENTS
UNITED STATES PATENT AND TRADEMARK OFFICE
P.O. BOX 1450
ALEXANDRIA, VA 22313-1450
www.uspto.gov

KLARQUIST SPARKMAN, LLP
121 S.W. SALMON STREET
SUITE #1600
PORTLAND OR 97204-2988

MAILED

FEB 27 2009

OFFICE OF PETITIONS

Applicant: Epstein et al.
Appl. No.: 11/578,891
International Filing Date: April 25, 2005
Title: MONOCLONAL ANTIBODY THAT SPECIFICALLY BINDS STEM CELLS AND ITS USE
Attorney Docket: 4239-67025-07
Pub. No.: US 2008/0095743 A1
Pub. Date: April 24, 2008

This is a decision on the request for a corrected patent application publication under 37 CFR 1.221(b), received on June 23, 2008, for the above-identified application.

The request is DISMISSED.

Applicant requests that the application be republished because the patent application publication contains the material errors of not including a preliminary amendment, and printing certain text in superscript.

37 CFR 1.221 (b) is applicable "only when the Office makes a material mistake which is apparent from Office records.... Any request for a corrected publication or revised patent application publication other than provided as provided in paragraph (a) of this section must be filed within two months from the date of the patent application publication. This period is not extendable." A material mistake must affect the public's ability to appreciate the technical disclosure of the patent application publication, to determine the scope of the patent application publication, or to determine the scope of the provisional rights that an applicant may seek to enforce upon issuance of a patent. [1]

The alleged priority error, comprising failure to publish a priority claim presented in a preliminary amendment, is not an Office error. Applicant's attention is directed to MPEP 1130(B), which clearly states "failure to include an amendment is not an Office error."

[1] Changes to Implement Eighteen-Month Publication of Patent Applications, 65 FR 57023, 57038 (Sept. 20, 2000), 1239, Off. Gaz. Pat. Office Notices 63, 75 (Oct. 10, 2000) (final rule).

The misprinting of certain text in superscript is not a material mistake, since the public would understand, from applicant's disclosure taken in context, the technical disclosure of the publication despite the incorrect superscript font.

The error is not a material Office error because the typographical error does not affect the understanding of the publication. The application is clearly understandable to one of ordinary skill in the art reading the application and claims. The mistake does not affect the public's ability to appreciate the technical disclosure of the patent application publication, or determine the scope of the patent application publication or determine the scope of the provisional rights that an applicant may seek to enforce upon issuance of a patent. A member of the public can understand the claim from the specification and remaining claims.

The applicant is advised that a "request for republication of an application previously published" may be filed under 37 CFR 1.221 (a). Such a request for republication "must include a copy of the application compliance with the Office's electronic filing system requirements and be accompanied by the publication fee set forth in § 1.18 (d) and the processing fee set forth in § 1.17 (i)." If the request for republication does not comply with the electronic filing system requirements, the republication will not take place and the publication fee set forth in § 1.18 (d) will be refunded. The processing fee will be retained.

A guide for filing a request for a Pre-Grant Publication, such as a request for republication, may be found on the link below:

http://www.uspto.gov/ebc/portal/tutorials.htm

Inquiries relating to this matter may be directed to Michael Cygan at (571) 272-7700, or to the undersigned at (571) 272-7709.

Mark O. Polutta
Legal Advisor
Office of Patent Legal Administration
Office of the Deputy Commissioner
for Patent Examination Policy

UNITED STATES PATENT AND TRADEMARK OFFICE

Commissioner for Patents
United States Patent and Trademark Office
P.O. Box 1450
Alexandria, VA 22313-1450
www.uspto.gov

Donn K Harms
12702 Via Cortina
Suite 100
Del Mar CA 92014

COPY MAILED

MAY 2 0 2009

OFFICE OF PETITIONS

In re Application of :
Miyasaka :
Application No. 11/578,916 : ON PETITION
Filed: October 18, 2006 :
Attorney Docket No. 3748-PAT :
For: FUNCTIONAL SHEET

This is a decision on the petition, filed April 28, 2009, requesting that the Office withdraw the holding of abandonment of the above-identified application. The petition will be treated under 37 CFR 1.181.

The petition under 37 CFR 1.181 is **GRANTED**.

This application was held abandoned for failure to properly respond in a timely manner to the final Office action, mailed May 30, 2008, which set forth an extendable three (3) month period for reply. Applicant submitted an amendment after final on August 22, 2008. The amendment after final failed to place this application in *prima facie* condition for allowance, as was explained in the November 13, 2008 Advisory action. A Notice of Abandonment, mailed December 12, 2008, states the August 22, 2008 response was not a proper reply to the May 30, 2008 final Office action.

Petitioner requests withdrawal of the holding of abandonment based on the assertion that a request for a three month extension of time and a RCE were timely filed in the Office on certificate of mailing date December 1, 2008 (a Monday) and physically in the Office on December 12, 2008. The undersigned finds this argument completely convincing, as these documents are present in the application file and Office financial records show that the required three month extension of time fee and the required RCE fee were charged on accounting date December 12, 2008. Both the petition for extension of time and the RCE contain proper certificates of mailing attached thereto.

Under 37 CFR 1.8(a)(1) correspondence is considered timely if: (1) the correspondence is mailed or transmitted prior to expiration of the set period for response by being properly addressed to the Patent and Trademark Office as set out in 37 CFR 1.1(a) and deposited with the U.S. Postal

Service with sufficient postage as first class mail or transmitted to the Patent and Trademark Office in accordance with 37 CFR 1.6(d); and (2) the correspondence includes a certificate for each piece of correspondence stating the date of deposit or transmission. The person signing the certificate should have a reasonable basis to expect that the correspondence would be mailed or transmitted on or before the date indicated.

As stated above, both pieces of correspondence included a proper certificate of mailing, in compliance with the requirements of 37 CFR 1.8(a)(1) as set forth above. In addition, the person signing the certificate, the attorney of record, had reasonable basis to expect that the correspondence would be mailed on December 1, 2008.

The petition under 37 CFR 1.181 is **granted**, the holding of abandonment is withdrawn, and the December 12, 2008 Notice of Abandonment is **vacated**. No petition fee has been or will be charged in connection with this matter.

Accordingly, the application file will be forwarded to Technology Center A.U. 3735 for further examination.

Telephone inquiries pertaining to this matter may be directed to the undersigned at (571) 272-3230.

Shirene Willis Brantley

Shirene Willis Brantley
Senior Petitions Attorney
Office of Petitions

CERTIFICATE OF MAILING

I hereby certify that this correspondence is being deposited with the United States Postal Service on 12/01/08 as first class mail in an envelope addressed to:

MAIL STOP RCE
COMMISSIONER FOR PATENTS
P. O. BOX 1450
ALEXANDRIA, VA 22313-1450

DONN K. HARMS

OIPE IAP78
DEC 12 2008
PATENT & TRADEMARK OFFICE

Adjustment date: 05/20/2009 CKHLOK
12/12/2008 NNGUYEN1 00000043 11578916
01 FC:2253 -555.00 OP

05/20/2009 CKHLOK 00000014 11578916
02 FC:2253 555.00 OP

IN THE UNITED STATES PATENT AND TRADEMARK OFFICE

In re Application of: Miyasaka **EXAMINER: John Lacyk**

Serial Number 11/578,916 **Group Art Unit: 3735**

Filing Date: 10/18/2006

For: Functional Sheet

Hon. Commissioner of Patents
and Trademarks
Washington, D.C. 20231

EXTENSION OF TIME

Please extend the time for response **for three *months* to 12/01/2008 (Monday after Sunday due date)** in the above referenced application. A Credit Card Authorization Form is attached for payment. Should additional fees be required, for this, or additionally required extensions, or for any other reason, to examine or to maintain the active status of this application, please charge Deposit Account 07-1338 for any such fees.

12/12/2008 NNGUYEN1 00000043 11578916
01 FC:2253 555.00 OP

OIPE IAP78
DEC 12 2008
PATENT & TRADEMARK OFFICE

REQUEST FOR CONTINUED EXAMINATION

Having not received a response from the Examiner for the Amendment After Final submitted on August 22, 2008, applicant hereby requests continued examination. Please enter the previously submitted amendment. A Credit Card Authorization Form is attached for payment. Should any other charges be due for this request or for any reason to maintain this application, please charge deposit account 07-1338 for the required fees.

Respectfully submitted,

Donn K. Harms
Reg No 38,911
Attorney for Applicant
December 1, 2008

OIPE UAP78 DEC 12 2008 PATENT & TRADEMARK OFFICE

1FW RCE

PTO/SB/30 (11-08)
Approved for use through 12/31/2008. OMB 0651-0031
U.S. Patent and Trademark Office; U.S. DEPARTMENT OF COMMERCE
Under the Paperwork Reduction Act of 1995, no persons are required to respond to a collection of information unless it contains a valid OMB control number.

Request for Continued Examination (RCE) Transmittal

Address to:
Mail Stop RCE
Commissioner for Patents
P.O. Box 1450
Alexandria, VA 22313-1450

Application Number	11/578,916
Filing Date	October 18, 2006
First Named Inventor	Miyasaka
Art Unit	3735
Examiner Name	Lacyk, John P.
Attorney Docket Number	3748-PAT

05/20/2009 CKHLOK 00000014 11578916
01 FC:2801 405.00 OP

This is a Request for Continued Examination (RCE) under 37 CFR 1.114 of the above-identified application.
Request for Continued Examination (RCE) practice under 37 CFR 1.114 does not apply to any utility or plant application filed prior to June 8, 1995, or to any design application. See Instruction Sheet for RCEs (not to be submitted to the USPTO) on page 2.

1. Submission required under 37 CFR 1.114 Note: If the RCE is proper, any previously filed unentered amendments and amendments enclosed with the RCE will be entered in the order in which they were filed unless applicant instructs otherwise. If applicant does not wish to have any previously filed unentered amendment(s) entered, applicant must request non-entry of such amendment(s).

a. ☐ Previously submitted. If a final Office action is outstanding, any amendments filed after the final Office action may be considered as a submission even if this box is not checked.

i. ☐ Consider the arguments in the Appeal Brief or Reply Brief previously filed on _____

ii. ☐ Other _____

Adjustment date: 05/20/2009 CKHLOK
12/12/2008 HNGUYEN1 00000042 11578916
01 FC:2801 -405.00 OP

b. ☑ Enclosed

i. ☐ Amendment/Reply

ii. ☐ Affidavit(s)/ Declaration(s)

iii. ☐ Information Disclosure Statement (IDS)

iv. ☑ Other Extension of Time, RCE

2. Miscellaneous

a. ☐ Suspension of action on the above-identified application is requested under 37 CFR 1.103(c) for a period of _____ months. (Period of suspension shall not exceed 3 months; Fee under 37 CFR 1.17(i) required)

b. ☐ Other _____

3. Fees The RCE fee under 37 CFR 1.17(e) is required by 37 CFR 1.114 when the RCE is filed.

a. ☑ The Director is hereby authorized to charge the following fees, any underpayment of fees, or credit any overpayments, to Deposit Account No. _____.

i. ☐ RCE fee required under 37 CFR 1.17(e)

ii. ☐ Extension of time fee (37 CFR 1.136 and 1.17)

iii. ☑ Other charge any underpayment or credit any overpayment of fees

12/12/2008 HNGUYEN1 00000042 11578916
01 FC:2801 405.00 OP

b. ☐ Check in the amount of $ _____ enclosed

c. ☑ Payment by credit card (Form PTO-2038 enclosed)

WARNING: Information on this form may become public. Credit card information should not be included on this form. Provide credit card information and authorization on PTO-2038.

SIGNATURE OF APPLICANT, ATTORNEY, OR AGENT REQUIRED

Signature		Date	December 1, 2008
Name (Print/Type)	Donn K. Harms	Registration No.	38,911

CERTIFICATE OF MAILING OR TRANSMISSION

I hereby certify that this correspondence is being deposited with the United States Postal Service with sufficient postage as first class mail in an envelope addressed to: Mail Stop RCE, Commissioner for Patents, P. O. Box 1450, Alexandria, VA 22313-1450 or facsimile transmitted to the U.S. Patent and Trademark Office on the date shown below.

Signature			
Name (Print/Type)	Donn K. Harms	Date	December 1, 2008

This collection of information is required by 37 CFR 1.114. The information is required to obtain or retain a benefit by the public which is to file (and by the USPTO to process) an application. Confidentiality is governed by 35 U.S.C. 122 and 37 CFR 1.11 and 1.14. This collection is estimated to take 12 minutes to complete, including gathering, preparing, and submitting the completed application form to the USPTO. Time will vary depending upon the individual case. Any comments on the amount of time you require to complete this form and/or suggestions for reducing this burden, should be sent to the Chief Information Officer, U.S. Patent and Trademark Office, U.S. Department of Commerce, P.O. Box 1450, Alexandria, VA 22313-1450. DO NOT SEND FEES OR COMPLETED FORMS TO THIS ADDRESS. **SEND TO: Mail Stop RCE, Commissioner for Patents, P.O. Box 1450, Alexandria, VA 22313-1450.**
If you need assistance in completing the form, call 1-800-PTO-9199 and select option 2.

UNITED STATES PATENT AND TRADEMARK OFFICE

Commissioner for Patents
United States Patent and Trademark Office
P.O. Box 1450
Alexandria, VA 22313-1450
www.uspto.gov

COPY MAILED

OCT 13 2009

OFFICE OF PETITIONS

LERNER GREENBERG STEMMER LLP
P.O. BOX 2480
HOLLYWOOD, FL 33022-2480

In re Application of	:	
Wolfgang GEES	:	
Application No. 11/578,921	:	DECISION ON PETITION
Filed: October 19, 2006	:	TO WITHDRAW
Attorney Docket No. WPC-8863	:	FROM RECORD
	:	

This is a decision on the Request to Withdraw as attorney or agent of record under 37 C.F.R. § 1.36(b), filed September 29, 2009.

The request is **APPROVED**.

A grantable request to withdraw as attorney/agent of record must be signed by every attorney/agent seeking to withdraw or contain a clear indication that one attorney is signing on behalf of another/others. The Office requires the practitioner(s) requesting withdrawal to certify that he, she, or they have: (1) given reasonable notice to the client, prior to the expiration of the response period, that the practitioner(s) intends to withdraw from employment; (2) delivered to the client or a duly authorized representative of the client all papers and property (including funds) to which the client is entitled; and (3) notified the client of any responses that may be due and the time frame within which the client must respond, pursuant 37 CFR 10.40(c).

The request was signed by Werner H. Stemer on behalf of the attorneys of record associated with Customer Number 24131.

The attorneys of record associated with Customer Number 24131 have been withdrawn.

Applicant is reminded that there is no attorney of record at this time.

The correspondence address of record has been changed and the new correspondence address is the address first copied below until otherwise properly notified.

Telephone inquiries concerning this decision should be directed to the undersigned at 571-272-6735.

/Diane C. Goodwyn/
Petitions Examiner
Office of Petitions

cc: WOLFGANG GEES
BIELEFELDER STRASSE 16
SCHLOB HOLTE-STUKENB D-33758
GERMANY

cc: WERNER H. STEMER
P.O. BOX 2580
HOLLYWOOD, FL 33020

UNITED STATES PATENT AND TRADEMARK OFFICE

UNITED STATES DEPARTMENT OF COMMERCE
United States Patent and Trademark Office
Address: COMMISSIONER FOR PATENTS
P.O. Box 1450
Alexandria, Virginia 22313-1450
www.uspto.gov

APPLICATION NUMBER	FILING OR 371(C) DATE	FIRST NAMED APPLICANT	ATTY. DOCKET NO./TITLE
11/578,921	10/19/2006	Wolfgang Gees	WPC-8863

CONFIRMATION NO. 8942

POWER OF ATTORNEY NOTICE

24131
LERNER GREENBERG STEMER LLP
P O BOX 2480
HOLLYWOOD, FL 33022-2480

OC000000038210723

Date Mailed: 10/09/2009

NOTICE REGARDING CHANGE OF POWER OF ATTORNEY

This is in response to the Power of Attorney filed 09/29/2009.

- The withdrawal as attorney in this application has been accepted. Future correspondence will be mailed to the new address of record. 37 CFR 1.33.

/dcgoodwyn/

Office of Data Management, Application Assistance Unit (571) 272-4000, or (571) 272-4200, or 1-888-786-0101

UNITED STATES PATENT AND TRADEMARK OFFICE

Commissioner for Patents
United States Patent and Trademark Office
P.O. Box 1450
Alexandria, VA 22313-1450
www.uspto.gov

OLIFF & BERRIDGE, PLC
P.O. BOX 320850
ALEXANDRIA VA 22320-4850

COPY MAILED

DEC 0 2 2008

OFFICE OF PETITIONS

In re Application of	:	
Yoshikazu Sasaki et al	:	
Application No. 11/578,936	:	DECISION GRANTING PETITION
Filed: October 19, 2006	:	UNDER 37 CFR 1.313(c)(2)
Attorney Docket No. 129861	:	

This is a decision on the petition under 37 CFR 1.313(c)(2), filed December 2, 2008, to withdraw the above-identified application from issue after payment of the issue fee.

The petition is **GRANTED**.

The above-identified application is withdrawn from issue for consideration of a submission under 37 CFR 1.114 (request for continued examination). *See* 37 CFR 1.313(c)(2).

Petitioner is advised that the issue fee paid on November 3, 2008 cannot be refunded. If, however, this application is again allowed, petitioner may request that it be applied towards the issue fee required by the new Notice of Allowance.[1]

Telephone inquiries should be directed to the undersigned at (571) 272-3208.

This application is being referred to Technology Center AU 2835 for processing of the request for continued examination under 37 CFR 1.114 and for consideration of the concurrently filed IDS.

/Karen Creasy/
Karen Creasy
Petitions Examiner
Office of Petitions

---

[1] *The request to apply the issue fee to the new Notice may be satisfied by completing and returning the new Part B – Fee(s) Transmittal Form (along with any balance due at the time of submission). Petitioner is advised that the Issue Fee Transmittal Form* ***must*** *be completed and timely submitted to avoid abandonment of the application.*

1 0 NOV 2008

UNITED STATES PATENT AND TRADEMARK OFFICE

COMMISSIONER FOR PATENTS
UNITED STATES PATENT AND TRADEMARK OFFICE
P.O. BOX 1450
ALEXANDRIA, VA 22313-1450
www.uspto.gov

OBLON, SPIVAK, MCCLELLAND MAIER & NEUSTADT, P.C.
1940 DUKE STREET
ALEXANDRIA, VA 22314

In re Application of NADAUD et al	:	
U.S. Application No.: 11/578,938	:	
PCT Application No.: PCT/FR2005/050250	:	DECISION
Int. Filing Date: 15 April 2005	:	
Priority Date Claimed: 21 April 2004	:	
Attorney Docket No.: 297013US0PCT	:	
For: VACUUM DEPOSITION METHOD	:	

This is in response to the correspondence filed 12 October 2007, which is being treated as a petition under 37 CFR 1.181. No petition fee is due.

BACKGROUND

On 15 April 2005, applicant filed international application PCT/FR2005/050250, which claimed priority of an earlier France application filed 21 April 2004. A copy of the international application was communicated to the USPTO from the International Bureau on 10 November 2005. The thirty-month period for paying the basic national fee in the United States expired on 21 October 2006.

On 19 October 2006, applicant filed national stage papers in the United States Designated/Elected Office (DO/EO/US). The submission was accompanied by, *inter alia*, the basic national fee required by 35 U.S.C. 371(c)(1).

On 12 October 2007, applicant filed the present petition under 37 CFR 1.181 along with an executed declaration.

DISCUSSION

The petition states that the surname of the second listed inventor is "Mattmann" rather than "Mattman".

MPEP 1893.01(e) states in relevant part,

> [W]here the discrepancy between the name of the inventor indicated in the international application during the international phase and the name of the inventor as it appears in the oath or declaration submitted under 37 CFR 1.497 is the result of a typographical or transliteration error, then a petition under 37 CFR 1.182 will not be required. In such case, the Office should simply be notified of the error.

In the present case, the affidavit signed by the inventor indicates that there has been no change of inventorship and that the discrepancy in the surname was the result of a clerical error. Applicant's explanation for the error is accepted.

CONCLUSION

For the reasons above, the petition under 37 CFR 1.181 is GRANTED.

The application has an International Filing Date under 35 U.S.C. 363 of 15 April 2005, and a date under 35 U.S.C. 371(c)(1), (c)(2), and (c)(4) of 12 October 2007.

This application is being forwarded to the United States Designated/Elected Office (DO/EO/US) for further processing in accordance with this decision.

Bryan Lin

Bryan Lin
PCT Legal Examiner
PCT Legal Office

Telephone: 571-272-3303
Facsimile: 571-273-0459

UNITED STATES PATENT AND TRADEMARK OFFICE

UNITED STATES DEPARTMENT OF COMMERCE
United States Patent and Trademark Office
Address: COMMISSIONER FOR PATENTS
P.O. Box 1450
Alexandria, Virginia 22313-1450
www.uspto.gov

KENYON & KENYON LLP
1500 K STREET N.W.
SUITE 700
WASHINGTON, DC 20005

Mail Date: 04/21/2010

Applicant	: Hidefumi Takaya	: DECISION ON REQUEST FOR
Patent Number	: 7586151	: RECALCULATION of PATENT
Issue Date	: 09/08/2009	: TERM ADJUSTMENT IN VIEW
Appliction No	: 11/578,949	: OF WYETH AND NOTICE OF INTENT TO
Filed	: 10/19/2006	: ISSUE CERTIFICATE OF CORRECTION
		:

The Request for Recalculation is **GRANTED** to the extent indicated.

The patent term adjustment has been determined to be **371** days. The USPTO will *sua sponte* issue a certificate of correction reflecting the amount of PTA days determined by the recalculation.

Prior to the issuance of the certificate of correction, the USPTO will afford patentee an opportunity to be heard and request reconsideration. Accordingly, patentee has **one month or thirty (30) days**, whichever is longer, to file a request for reconsideration of this patent term adjustment calculation. See 35 U.S.C. 154(b)(3)(B)(ii) and 37 CFR 1.322(a)(4). No extensions of time will be granted under 37 CFR 1.136.

Patentee should use document code PET.OP if electronically filing a request for reconsideration of this patent term adjustment calculation. The patentee must also include the information required by 37 CFR 1.705(b)(2) and the fee required by 37 CFR 1.18(e). If patentee does not file a timely request for reconsideration of this patent term adjustment calculation including the information required by 37 CFR 1.705(b)(2) and the fee required by 37 CFR 1.18(e), the USPTO will issue a certificate of correction reflecting the PTA determination noted above.

Patentee should be aware that in order to preserve the right to review in the United States District Court for the District of Columbia of the USPTO patent term adjustment determination, patentee must ensure that he or she also take the steps required under 35 U.S.C. 154(b)(4)(A) in a timely manner. Nothing in the request for recalculation should be construed as providing an alternative time frame for commencing a civil action under 35 U.S.C. 154(b)(4)(A).

Any questions concerning this decision should be directed to the Office of Patent Legal Administration at 571-272-7702.

UNITED STATES PATENT AND TRADEMARK OFFICE

COMMISSIONER FOR PATENTS
UNITED STATES PATENT AND TRADEMARK OFFICE
P.O. BOX 1450
ALEXANDRIA, VA 22313-1450
www.uspto.gov

15 NOV 2006

JUNEAU PARTNERS
P.O. BOX 2516
ALEXANDRIA, VA 22301

In re Application of CATTANEO et al	:	
U.S. Application No.: 11/579,108	:	
PCT Application No.: PCT/IT2005/000249	:	DECISION
Int. Filing Date: 29 April 2005	:	
Priority Date Claimed: 30 April 2004	:	
Attorney Docket No.: OC/MS/AE 95715	:	
For: NON HUMAN TRANSGENIC ANIMAL. . .	:	

This is in response to applicant's "Petition for Revival of an International Application for Patent Designating the U.S. Abandoned Unintentionally Under 37 CFR 1.137(b)" filed 31 October 2006.

BACKGROUND

On 29 April 2005, applicant filed international application PCT/IT2005/000249, which claimed priority of an earlier Italy application filed 30 April 2004. A copy of the international application was communicated to the USPTO from the International Bureau on 10 November 2005. The thirty-month period for paying the basic national fee in the United States expired on 30 October 2006.

International application PCT/IT2005/000249 became abandoned as to the United States for failure to timely pay the basic national fee.

On 31 October 2006, applicant filed the present petition under 37 CFR 1.137(b).

DISCUSSION

Under 37 CFR 1.137(b), a petition requesting that an application be revived on the grounds of unintentional abandonment must be accompanied by: (1) the required reply unless previously filed, (2) the petition fee as set forth in 37 CFR 1.17(m), (3) a statement that the entire delay in filing the required reply from the due date for the reply until the filing of a grantable petition was unintentional, and (4) a terminal disclaimer if the application was filed before 08 June 1995.

With regard to item (1), applicant has provided the required basic national fee under 35 U.S.C. 371.

With regard to item (2), applicant has provided the required petition fee.

With regard to item (3), applicant has provided the required statement.

With regard to item (4), because the international application was filed after 08 June 1995, no terminal disclaimer is required.

CONCLUSION

For the reasons above, the petition under 37 CFR 1.137(b) is GRANTED.

This application is being forwarded to the United States Designated/Elected Office (DO/EO/US) for further processing in accordance with this decision, including preparation and mailing of a Notification of Missing Requirements under 35 U.S.C. 371 (Form PCT/DO/EO/905) indicating that a properly executed oath or declaration in compliance with 37 CFR 1.497 must be filed.

Bryan Lin

Bryan Lin
PCT Legal Examiner
PCT Legal Office

Telephone: 571-272-3303
Facsimile: 571-273-0459

UNITED STATES PATENT AND TRADEMARK OFFICE

Commissioner for Patents
United States Patent and Trademark Office
P.O. Box 1450
Alexandria, VA 22313-1450
www.uspto.gov

JUNEAU PARTNERS
P.O. BOX 2516
ALEXANDRIA, VA. 22301

MAILED

MAR 12 2009

OFFICE OF PETITIONS

In re Application of :
Antonino CATTANEO et al :
Application No. 11/579,108 : DECISION ON PETITION
Filing Date: February 25, 2007 :
Attorney Docket No. Des-Cattaneo 2 :

This is a decision on the petition under the unintentional provisions of 37 CFR 1.137(b), filed September 10, 2008, to revive the above-identified application.

The petition is **GRANTED**.

The application became abandoned for failure to reply in a timely manner to the Notice to Comply with Requirements for Patent Applications Containing Nucleotide Sequence and/or Amino Acid Sequence Disclosures, mailed December 26, 2007. The Notice set a period for reply of two (2) months from the mail date of the Notice. No extensions of time under the provisions of 37 CFR 1.136(a) were obtained. Accordingly, the application became abandoned on February 27, 2008.

The petition satisfies the requirements of 37 CFR 1.137(b) in that petitioner has supplied (1) the reply in the form of a response to the Notice To Comply With Requirements For Patent Applications Containing Nucleotide Sequence and/or Amino Acid Sequence Disclosures , (2) the petition fee of, and (3) a proper statement of unintentional delay. Accordingly, the reply to the Notice to File Missing Parts of Nonprovisional Application of is accepted as having been unintentionally delayed.

Telephone inquiries concerning this decision should be directed to the undersigned at 571-272-0602.

This application is being referred to the Office Patent Application Processing.

Thurman K. Page
Petitions Examiner
Office of Petitions

UNITED STATES PATENT AND TRADEMARK OFFICE

Commissioner for Patents
United States Patent and Trademark Office
P.O. Box 1450
Alexandria, VA 22313-1450
www.uspto.gov

JUNEAU PARTNERS
333 N FAIRFAX ST.
SUITE 305
ALEXANDRIA VA 22301

COPY MAILED

JAN 27 2010

In re Application of	:	
CATTANEO, Antonino et al.	:	
Application No. 11/579,108	:	DECISION ON PETITION
Filed: February 25, 2007	:	TO WITHDRAW
Attorney Docket No. **AbdnByClnt-DeSim-Cataneo**	:	FROM RECORD

This is a decision on the Request to Withdraw as attorney or agent of record under 37 C.F.R. § 1.36(b), filed December 03, 2009.

The request is **NOT APPROVED**.

The Office has revised its change in procedure for request to withdraw from representation applies to requests filed on or after May 12, 2008.

A grantable request to withdraw as attorney/agent of record must be signed by every attorney/agent seeking to withdraw or contain a clear indication that one attorney is signing on behalf of another/others. The Office requires the practitioner(s) requesting withdrawal to certify that he, she, or they have: (1) given reasonable notice to the client, prior to the expiration of the response period, that the practitioner(s) intends to withdraw from employment; (2) delivered to the client or a duly authorized representative of the client all papers and property (including funds) to which the client is entitled; and (3) notified the client of any responses that may be due and the time frame within which the client must respond, pursuant 37 CFR 10.40(c).

The request cannot be approved because there is no indication that acts (1) thru (3) noted in the above-identified certifications have been performed. See PTO/SB/83 (11-08).

In order to request or take action in a patent matter, the assignee must establish its ownership of the patent to the satisfaction of the Director. In this regard, a Statement under 37 CFR 3.73(b) must have either: (i) documentary evidence of a chain of title from the original owner to the assignee (e.g., copy of an executed assignment), and a statement affirming that the documentary evidence of the chain of title from the original owner to the assignee was or concurrently is being submitted for recordation pursuant to § 3.11; or (ii) a statement specifying where documentary

evidence of a chain of title from the original owner to the assignee is recorded in the assignment records of the Office (e.g., reel and frame number).

All future communications from the Office will continue to be directed to the above-listed address until otherwise notified by applicant.

Telephone inquiries concerning this decision should be directed to Tredelle Jackson at 571-272-2783.

Tredelle D. Jackson
Paralegal Specialist
Office of Petitions

cc: **DESIMONE & PARNTERS**
VIA VINCENZO BELLINI 20
ROME ITALY 00198

UNITED STATES PATENT AND TRADEMARK OFFICE

Commissioner for Patents
United States Patent and Trademark Office
P.O. Box 1450
Alexandria, VA 22313-1450
www.uspto.gov

14 NOV 2006

STEVENS DAVIS MILLER & MOSHER, LLP
1615 L STREET, NW
SUITE 850
WASHINGTON DC 20036

In re Application of AKE SJOBERG Application No.: 11/579,153 PCT No.: PCT/SE04/01681 Int. Filing: 17 November 2004 Priority Date: 20 November 2003 Attorney Docket No.: TPP 32024PCT For: DECORATIVE BOARD WITH SURFACE STRUCTURE	DECISION ON PETITION TO REVIVE UNDER 37 CFR 1.137(b)

The petition to revive under 37 CFR 1.137(b) filed 31 October 2006 in the above-captioned application is hereby **GRANTED** as follows:

Applicant's statement that the "entire delay in filing the required reply from the due date for the required reply until the filing of a grantable petition under 37 CFR 1.137(b) was unintentional" meets the requirements of 37 CFR 1.137(b)(3).

A review of the application file reveals that the basic national fee of $300 has now been provided. The required petition fee of $1500 was also paid. Thus, the requirements of 37 CFR 1.137(b) have been satisfied. Therefore, the request to revive the application abandoned under 35 U.S.C. 371(d) is granted as to the National stage in the United States of America.

This application is being forwarded to the United States Designated/Elected Office for further processing, including issuance of a Notification of Missing Requirements indicating that an oath or declaration, in compliance with 37 CFR 1.497(a) and (b) and the $130 surcharge for filing the oath or declaration after the thirty month period, is required.

Cynthia M. Kratz

Cynthia M. Kratz
Attorney Advisor
PCT Legal Office
Office of PCT Legal Administration

Telephone: (571) 272-3286
Facsimile: (571) 273-0459

28 NOV 2006

UNITED STATES PATENT AND TRADEMARK OFFICE

Commissioner for Patents
United States Patent and Trademark Office
P.O. Box 1450
Alexandria, VA 22313-1450
www.uspto.gov

YOUNG & THOMPSON
745 SOUTH 23RD STREET
2ND FLOOR
ARLINGTON VA 22202

In re Application of	:	
VALENTINI	:	
Application No.: 11/579,159	:	DECISION ON
PCT No.: PCT/IB2004/001529	:	
Int. Filing Date: 04 May 2004	:	PETITION UNDER
Priority Date: 15 May 2003	:	
Attorney Docket No.: 5002-1096	:	37 CFR 1.137(b)
For: SYSTEM FOR DETECTING AND RECORDING	:	
IMPACTS PRODUCED BY SHOCK WAVES AND	:	
PROJECTILES ON A TARGET	:	

This decision is in response to applicants' submission filed 31 October 2006.

BACKGROUND

On 04 May 2004, applicant filed international application PCT/IB2004/001529 which designated the U.S. and claimed a priority date of 15 May 2003. A copy of the international application was communicated to the United States Patent and Trademark Office (USPTO) from the International Bureau on 25 November 2004. The thirty-month period for paying the basic national fee in the United States expired at midnight on 15 November 2005.

On 31 October 2006, applicant filed a transmittal letter for entry into the national stage in the United States, which was accompanied by, *inter alia*, the Basic National Fee, a declaration of the inventor, the surcharge under 37 CFR 1.492(h) for filing any of the search fee, the examination fee, or the oath or declaration after the date of the commencement of the national stage, and a petition under 37 CFR 1.137(b) to revive the application.

DISCUSSION

A petition to revive the present application under 37 CFR 1.137(b) must include:
(1) The required reply;
(2) The petition fee;
(3) A statement that the entire delay in filing the required reply from the due date for the reply until the filing of a grantable petition was unintentional.

As to item (1), applicant submitted the basic national fee on 31 October 2006.

As to item (2), applicant submitted the petition fee on 31 October 2006.

As to item (3), the required statement has been provided.

A review of the application file reveals that, with the filing of the present petition and accompanying papers, a proper response has been submitted and all of the requirements of 37 CFR 1.137(b) for revival have been satisfied and revival is therefore appropriate.

Declaration of Inventors

The declaration of inventors filed 31 October 2006 is in compliance with 37 CFR 1.497(a)-(b).

CONCLUSION

The petition under 37 CFR 1.137(b) is **GRANTED** for the reasons set forth above.

Please direct further correspondence with respect to this matter to Mail Stop PCT, Commissioner for Patents, Office of PCT Legal Administration, P.O. Box 1450, Alexandria, Virginia 22313-1450, with the contents of the letter marked to the attention of the Office of PCT Legal Administration.

This application is being forwarded to the National Stage Processing Branch of the Office of PCT Operations to continue national stage processing of the application.

Daniel Stemmer
Legal Examiner
PCT Legal Affairs
Office of Patent Cooperation Treaty
Legal Administration
Telephone: (571) 272-3301
Facsimile: (571) 273-0459

UNITED STATES PATENT AND TRADEMARK OFFICE

Commissioner for Patents
United States Patent and Trademark Office
P.O. Box 1450
Alexandria, VA 22313-1450
www.uspto.gov

28 NOV 2006

Knobbe Martens Olson & Bear LLP
2040 Main Street
Fourteenth Floor
Irvine, CA 92614

In re Application of LOURTIE, et al. Application No.: 11/579,162 PCT No.: PCT/EP05/01958 Int. Filing Date: 24 February 2005 Priority Date: 05 March 2004 Attorney Docket No.: DECLE123.001APC For: 8-PHENOXY - *y* CARBOLINE DERIVATIVES	:	DECISION ON PETITION UNDER 37 CFR 1.137(b)

The petition to revive under 37 CFR 1.137(b) filed 31 October 2006 in the above-captioned application is hereby **GRANTED** as follows:

Applicant's statement that the "the entire delay in filing the required reply from the due date for the reply until the filing of a grantable petition under 37 CFR 1.137(b) was unintentional" meets the requirements of 37 CFR 1.137(b)(3).

A review of the application file reveals that applicant has submitted the basic national fee and the requirements of 37 CFR 1.137(b) have been satisfied. Therefore, the request to revive the application abandoned under 35 U.S.C. 371(d) is granted as to the National stage in the United States of America.

This application is being returned to the United States Designated/Elected Office for processing in accordance with this decision.

Anthony Smith

Anthony Smith
Attorney-Advisor
Office of PCT Legal Administration
Tel: (571) 272-3298
Fax: (571) 273-0459

2 5 JUN 2007

UNITED STATES PATENT AND TRADEMARK OFFICE

Commissioner for Patents
United States Patent and Trademark Office
P.O. Box 1450
Alexandria, VA 22313-1450
www.uspto.gov

JORDAN AND HAMBURG LLP
122 EAST 42ND STREET
SUITE 4000
NEW YORK NY 10168

In re Application of	:	
AMANO et al.	:	DECISION ON
Application No.: 11/579,169	:	
PCT No.: PCT/JP2005/008246	:	PAPERS
Int. Filing Date: 28 April 2005	:	
Priority Date: 28 April 2004	:	UNDER 37 CFR 1.42
Attorney's Docket No.: F-9238	:	
For: AUTOMATIC IMAGING METHOD	:	
AND APPARATUS	:	

This is a decision on applicants' submission filed in the United States Patent and Trademark Office (USPTO) on 30 October 2006, which was accompanied by a declaration of the inventors. The indication in this declaration that joint inventor Yoshinori Sashikawa is deceased has been treated as a request for status under 37 CFR 1.42.

BACKGROUND

On 28 April 2005, applicants filed international application PCT/JP2005/008246, which designated the United States and claimed a priority date of 28 April 2004. A copy of the international application was communicated to the USPTO from the International Bureau on 10 November 2005. The thirty-month period for paying the basic national fee in the United States expired at midnight on 30 October 2006 (28 October 2006 being a Saturday).

On 30 October 2006, applicants filed a transmittal letter for entry into the national stage in the United States accompanied by, *inter alia*, the basic national fee, an English translation of the international application as filed, and a declaration of inventors. The indication in this declaration that joint inventor Yoshinori Sashikawa is deceased has been treated as a request for status under 37 CFR 1.42.

DISCUSSION

The submission filed 30 October 2006 has been reviewed and has been found in compliance with 37 CFR 1.42. The declaration filed 30 October 2006 is in compliance with 37 CFR 1.497(a)-(b).

CONCLUSION

For the above reasons, the request for status under 37 CFR 1.42 is **ACCEPTED**.

This application is being forwarded to the National Stage Processing Branch of the Office of PCT Operations to continue national stage processing of the application in accordance with this decision.

Daniel Stemmer
Legal Examiner
PCT Legal Affairs
Office of Patent Cooperation Treaty
Legal Administration
Telephone: (571) 272-3301
Facsimile: (571) 273-0459

UNITED STATES PATENT AND TRADEMARK OFFICE

Commissioner for Patents
United States Patent and Trademark Office
P.O. Box 1450
Alexandria, VA 22313-1450
www.uspto.gov

3 0 SEP 2009

Michael W. Garvey
PEARNE & GORDON LLP
1801 East 9th Street
Suite 1200
Cleveland, OH 44114-3108

In re Application of BORETZKI, Michael et al.	: DECISION ON
Application No.: 11/579,176	:
PCT Application No.: PCT/CH2005/000701	: PETITION UNDER
Int. Filing Date: 25 November 2005	:
Priority Date: 11 February 2004	: 37 CFR 1.182
Attorney Docket No.: TSW-41523	:
For: METHOD FOR MANUFACTURING A	:
FITTED HEARING DEVICE	:

This decision is in response to the papers filed on 18 July 2008 which are treated as a petition under 37 CFR 1.182.

BACKGROUND

On 30 October 2006, applicant filed a national stage application listing the incorrect PCT number on the transmittal letter (PCT/CH2005/00071). An applicant data sheet was also filed recording the correct PCT number (PCT/CH2005/000701).

On 09 July 2008, the USPTO mailed a Notification of Missing Requirements informing applicants of the discrepancy in the number of claims in the International application (PCT/CH2005/00071) and number of claims in the instant application.

On 18 July 2008, applicant filed a request to associate the present application with the International Application PCT/CH2005/000701.

On 13 August 2009, the USPTO mailed a Notice of Acceptance (Form PCT/DO/EO/903).

DISCUSSION

A review of the above-captioned application file verifies that the wrong PCT number was designated on the transmittal form. The PCT number was listed as PCT/CH2005/00071 by applicant.

However, other indications in the file of record refer to the underlying international application as PCT/CH2005/000701. Applicant's explanation for the error is accepted. Correction of the application requires a petition under 37 CFR 1.182. The requisite petition fee will be charged to Deposit Account No. 16-0820 as authorized by applicant.

CONCLUSION

For the reasons detailed above, applicant's petition under 37 CFR 1.182 is GRANTED.

The Notification of Missing Requirements mailed on 09 July 2008 is hereby VACATED.

The Notice of Acceptance mailed 13 August 2009 is hereby VACATED. The application has an international filing date of 25 November 2005 and a date under 35 U.S.C. 371 (c)(1), (c)(2), and (c)(4) of 30 October 2006.

This application is being returned to the United States Designated/Elected Office for processing in accordance with this decision, including preparation and mailing of a corrected Notice of Acceptance.

Bryan Lin

/Brian Whiteman/
Detailee
Office of PCT Legal Administration
Telephone: 571-272-6095
Facsimile: 571-273-0459

Bryan Lin
PCT Legal Examiner
Office of PCT Legal Administration

UNITED STATES PATENT AND TRADEMARK OFFICE

UNITED STATES DEPARTMENT OF COMMERCE
United States Patent and Trademark Office
Address: COMMISSIONER FOR PATENTS
P.O. Box 1450
Alexandria, Virginia 22313-1450
www.uspto.gov

APPLICATION NO.	FILING DATE	FIRST NAMED INVENTOR	ATTORNEY DOCKET NO.	CONFIRMATION NO.
11/579,185	11/30/2006	Vineet Dev Tandon	06134	2058

7590 07/10/2008
DENNISON, SCHULTZ & MACDONALD
1727 KING STREET
SUITE 105
ALEXANDRIA, VA 22314

EXAMINER

ART UNIT	PAPER NUMBER
3733	

MAIL DATE	DELIVERY MODE
07/10/2008	PAPER

DECISION DISMISSING PETITION UNDER 37 CFR 1.138(d)

The declaration of express abandonment will not be recognized

This is in response to the petition under 37 CFR 1.138(d), requesting for a refund of any previously paid search fee and excess claims fee in the above-identified application.

The petition is dismissed.

The express abandonment will **not** be recognized for the reason(s) indicated below:

1. ☐ The petition was not filed in sufficient time to permit the appropriate officials to recognize the abandonment before an examination has been made of the application. See 37 CFR 1.138(d).

2. ☐ The petition was not signed by a party authorized by 37 CFR 1.33(b)(1), (3) or (4).

3. ☒ The application is not an application filed under 35 U.S.C. 111(a) on or after December 8, 2004.

4. ☐ The petition for express abandonment under 1.138(d) is dismissed because the applicant did not pay any search fee and excess claims fees in the above-identified application.

Telephone inquiries should be directed to the Office of Data Management at (571) 272-4200.

Patent Publication Branch
Office of Data Management

FORM PET651D (Rev. 08/07)

2 9 MAY 2008

UNITED STATES PATENT AND TRADEMARK OFFICE

Commissioner for Patents
United States Patent and Trademark Office
P.O. Box 1450
Alexandria, VA 22313-1450
www.uspto.gov

Nixon & Vanderhye
901 North Glebe Road
Arlington, VA 22203

In re Application of	:	
CHAUVIER et al.	:	
Application No.: 11/579,202	:	
PCT No.: PCT/EP05/05493	:	
Int. Filing Date: 02 May 2005	:	DECISION ON PETITION
Priority Date: 30 April 2004	:	
Attorney Docket No.: BJS-1721-130	:	
For: CASPASE-2 INHIBITORS AND THEIR BIOLOGICAL APPLICATIONS	:	

This decision is issued in response to applicants' "Petition under 37 CFR 1.47" filed 19 May 2008 to accept the application without the signature of joint-inventor, Dominique Rebouillat.

BACKGROUND

On 02 May 2005, applicants filed international application PCT/EP05/05493 which claimed a priority date of 30 April 2004. Pursuant to 37 CFR 1.495, the thirty-month period for paying the basic national fee in the United States expired at midnight on 30 October 2006.

On 27 October 2006, applicants filed a transmittal letter for entry into the national stage in the United States for international application PCT/EP05/05493, which included, among other materials: the requisite basic national fee as required by 35 U.S.C. 371(c)(1); a preliminary amendment; and a copy of the international application.

On 19 October 2007, the United Stated Designated/Elected Office mailed a Notification of Missing Requirements under 35 U.S.C. 371 (Form PCT/DO/EO/905) indicating that an oath or declaration in compliance with 37 CFR 1.497(a) and (b) must be filed. The notification set a two-month time limit in which to respond. The notification set a two-month time limit in which to respond.

On 19 May 2008, applicants filed the present petition under 37 CFR 1.47(a) and a five-month extension of time fee.

DISCUSSION

A petition under 37 CFR 1.47(a) must be accompanied by: (1) the fee under 37 CFR 1.17, (2) factual proof that the missing joint inventor refuses to execute the application or

cannot be reached after diligent effort, (3) a statement of the last known address of the missing inventor, and (4) an oath or declaration by each 37 CFR 1.47(a) applicant on his or her own behalf and behalf of the nonsigning joint inventor.

Applicants here have submitted the appropriate petition fee. Item (1) is therefore satisfied.

Regarding item (2), the petition asserts that the nonsigning inventor has refused to execute the declaration. Before a refusal to execute the application can be claimed, section 409.03(d) of the MPEP requires that the nonsigning inventor be provided with a copy of the complete application, including specification, drawings and claims. The MPEP also requires "a statement of facts by the person who presented the inventor with the application papers and/or to whom the refusal was made."

Here, the evidence submitted to demonstrate Dominique Rebouillat's refusal to execute the application papers is contained in the Declaration of Chantal Peaucelle included in the petition, and the exhibits thereto. These materials provide the required firsthand statement regarding the delivery to the nonsigning inventor of a copy of the complete application, and the nonsigning inventor's refusal to execute the application, with documentary evidence supporting the statement. Item (2) is therefore satisfied.

Regarding item (3), applicants have provided the last known address of the nonsigning inventor. Accordingly, item (3) is therefore satisfied.

Regarding item (4), section 409.03(a) of the Manual of Patent Examining Procedure ("MPEP") states that:

> An oath or declaration signed by all the available joint inventors with the signature block of the nonsigning inventor(s) left blank may be treated as having been signed by all the available joint inventors on behalf of the nonsigning inventor(s), unless otherwise indicated.

Here, applicants have filed declarations executed by two of the three inventors and including an unsigned signature box identifying the nonsigning inventor (Dominique Rebouillat). This declaration is treated as having been executed by the available inventors on their behalf and on behalf of the nonsigning inventor. Item (4) is therefore satisfied.

For the reasons stated above, it is appropriate to accept the application without the signature of Dominique Rebouillat under 37 CFR 1.47(a) at this time.

CONCLUSION

The petition under 37 CFR 1.47(a) is **GRANTED**.

As provided in 37 CFR 1.47(c), a notice of the filing of this application will be forwarded to the nonsigning inventor at his last known address of record.

A notice of the filing of the application under 37 CFR 1.47(a) will be published in the Official Gazette.

This application is being returned to the United States Designated/Elected Office for processing in accordance with this decision.

Anthony Smith
Attorney-Advisor
Office of PCT Legal Administration
Tel.: (571) 272-3298
Fax: (571) 273-0459

2 9 MAY 2008

UNITED STATES PATENT AND TRADEMARK OFFICE

Commissioner for Patents
United States Patent and Trademark Office
P.O. Box 1450
Alexandria, VA 22313-1450
www.uspto.gov

Dominique Rebouillat
5 Villa de l'Astrolabe
75015 Paris
France

In re Application of
CHAUVIER et al.
Application No.: 11/579,202
PCT No.: PCT/EP05/05493
Int. Filing Date: 02 May 2005
Priority Date: 30 April 2004
Attorney Docket No.: BJS-1721-130
For: CASPASE-2 INHIBITORS AND THEIR BIOLOGICAL APPLICATIONS

Dear Dominique Rebouillat:

You are named as an inventor in the above identified United States patent application, filed under the provisions of 37 CFR 1.47(a) and 35 U.S.C. 116. Should a patent be granted, you will be designated as an inventor.

As a named inventor, you are entitled to inspect any paper in the file wrapper of the application, order copies of all or any part thereof (at a prepaid cost per 37 CFR 1.19) or to make your position of record in the application. Alternatively, you may arrange to do any of the preceding through a registered patent agent or attorney presenting written authorization from you. If you care to join in the application, counsel of record (see below) would presumably assist you. Joining in the application would entail the filing of an appropriate oath or declaration by you pursuant to 37 CFR 1.63.

Anthony Smith
Attorney-Advisor
Office of PCT Legal Administration
Telephone: (571) 272-3298

Counsel of Record:
Nixon & Vanderhye
901 North Glebe Road, 11th Floor
Arlington, VA 22203

SPE RESPONSE FOR CERTIFICATE OF CORRECTION

Paper No.: _____

DATE : 03-14-09

TO SPE OF : ART UNIT 2855

SUBJECT : Request for Certificate of Correction for Appl. No.: 11/579209 Patent No.: 7487682

Please respond to this request for a certificate of correction within 7 days.

FOR IFW FILES:

Please review the requested changes/corrections as shown in the **COCIN** document(s) in the IFW application image. No new matter should be introduced, nor should the scope or meaning of the claims be changed.

Please complete the response (see below) and forward the completed response to scanning using document code **COCX**.

FOR PAPER FILES:

Please review the requested changes/corrections as shown in the attached certificate of correction. Please complete this form (see below) and forward it with the file to:

Certificates of Correction Branch (CofC)
South Tower - 9A22
Palm Location 7580

Certificates of Correction Branch
703-308-9390 ext. 123

Thank You For Your Assistance

The request for issuing the above-identified correction(s) is hereby:
Note your decision on the appropriate box.

- ☒ **Approved** — **All** changes apply.
- ☐ **Approved in Part** — Specify below which changes **do not** apply.
- ☐ **Denied** — State the reasons for denial below.

Comments: _____

4/6/09

SPE **Art Unit** 2855

PTO/SB/44 (09-07)
Approved for use through 08/31/2010. OMB 0651-0033
U.S. Patent and Trademark Office; U.S. DEPARTMENT OF COMMERCE
Under the Paperwork Reduction Act of 1995, no persons are required to respond to a collection of information unless it displays a valid OMB control number.
(Also Form PTO-1050)

UNITED STATES PATENT AND TRADEMARK OFFICE
CERTIFICATE OF CORRECTION

PATENT NO. : 7,487,682

APPLICATION NO.: 11/579,209

ISSUE DATE : FEBRUARY 10, 2009

INVENTOR(S) : GRUBER-5 PCT

It is certified that an error appears or errors appear in the above-identified patent and that said Letters Patent is hereby corrected as shown below:

Please replace Fig. 1 with CORRECT Fig. 1 below:

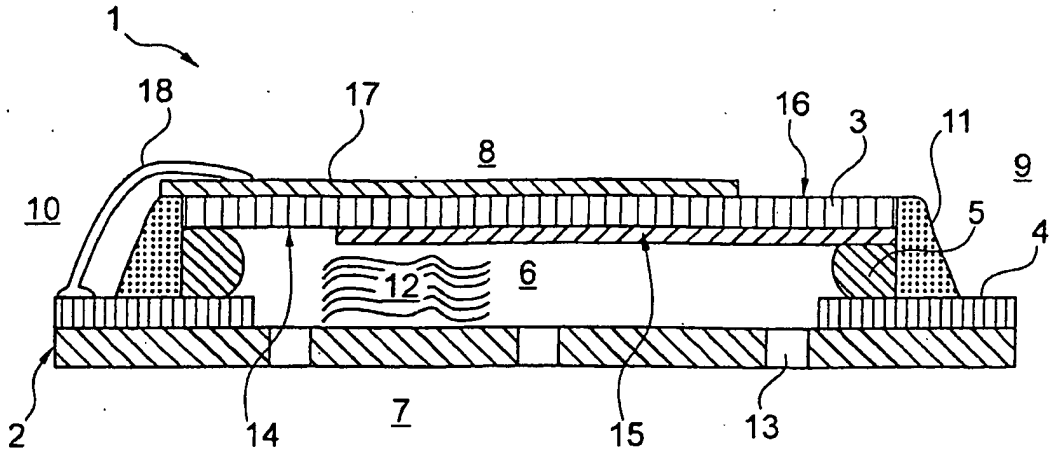

Fig. 1

MAILING ADDRESS OF SENDER (Please do not use customer number below):

COLLARD & ROE, P.C.
1077 Northern Boulevard
Roslyn, NY 11576

This collection of information is required by 37 CFR 1.322, 1.323, and 1.324. The information is required to obtain or retain a benefit by the public which is to file (and by the USPTO to process) an application. Confidentiality is governed by 35 U.S.C. 122 and 37 CFR 1.14. This collection is estimated to take 1.0 hour to complete, including gathering, preparing, and submitting the completed application form to the USPTO. Time will vary depending upon the individual case. Any comments on the amount of time you require to complete this form and/or suggestions for reducing this burden, should be sent to the Chief Information Officer, U.S. Patent and Trademark Office, U.S. Department of Commerce, P.O. Box 1450, Alexandria, VA 22313-1450. DO NOT SEND FEES OR COMPLETED FORMS TO THIS ADDRESS. SEND TO: **Attention Certificate of Corrections Branch, Commissioner for Patents, P.O. Box 1450, Alexandria, VA 22313-1450.**

MAR 1 1 2009

If you need assistance in completing the form, call 1-800-PTO-9199 and select option 2.

PTO/SB/44 (09-07)
Approved for use through 08/31/2010. OMB 0651-0033
U.S. Patent and Trademark Office; U.S. DEPARTMENT OF COMMERCE
Under the Paperwork Reduction Act of 1995, no persons are required to respond to a collection of information unless it displays a valid OMB control number.
(Also Form PTO-1050)

UNITED STATES PATENT AND TRADEMARK OFFICE
CERTIFICATE OF CORRECTION

PATENT NO. : 7,487,682

APPLICATION NO.: 11/579,209

ISSUE DATE : FEBRUARY 10, 2009

INVENTOR(S) : GRUBER-5 PCT

It is certified that an error appears or errors appear in the above-identified patent and that said Letters Patent is hereby corrected as shown below:

Please replace Fig. 4 with CORRECT Fig. 4 below:

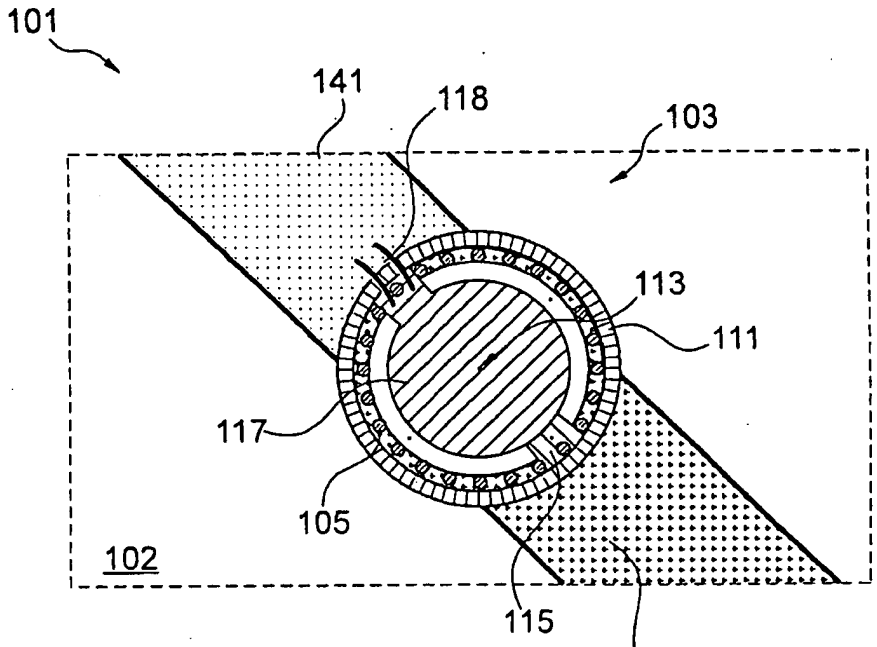

Fig. 4

MAILING ADDRESS OF SENDER (Please do not use customer number below):

COLLARD & ROE, P.C.
1077 Northern Boulevard
Roslyn, NY 11576

This collection of information is required by 37 CFR 1.322, 1.323, and 1.324. The information is required to obtain or retain a benefit by the public which is to file (and by the USPTO to process) an application. Confidentiality is governed by 35 U.S.C. 122 and 37 CFR 1.14. This collection is estimated to take 1.0 hour to complete, including gathering, preparing, and submitting the completed application form to the USPTO. Time will vary depending upon the individual case. Any comments on the amount of time you require to complete this form and/or suggestions for reducing this burden, should be sent to the Chief Information Officer, U.S. Patent and Trademark Office, U.S. Department of Commerce, P.O. Box 1450, Alexandria, VA 22313-1450. DO NOT SEND FEES OR COMPLETED FORMS TO THIS ADDRESS. SEND TO: **Attention Certificate of Corrections Branch, Commissioner for Patents, P.O. Box 1450, Alexandria, VA 22313-1450.**

MAR 1 1 2009

If you need assistance in completing the form, call 1-800-PTO-9199 and select option 2.

UNITED STATES PATENT AND TRADEMARK OFFICE

Commissioner for Patents
United States Patent and Trademark Office
P.O. Box 1450
Alexandria, VA 22313-1450
www.uspto.gov

MAIL

JUL 28 2010

DIRECTOR'S OFFICE
TECHNOLOGY CENTER 2600

PANASONIC PATENT CENTER
1130 CONNECTICUT AVENUE NW, SUITE 1100
WASHINGTON DC 20036

In re Application of IKEDA, WATARU, et al. Application No. 11/579,223 Filed: November 29, 2007 Attorney Docket No. **P38683-02**	: : : : : : :	DECISION ON REQUEST TO PARTICIPATE IN PATENT PROSECUTION HIGHWAY PROGRAM AND PETITION TO MAKE SPECIAL UNDER 37 CFR 1.102(d)

This is a decision on the request for reconsideration to participate in the Patent Prosecution Highway (PPH) program and the petition under 37 CFR 1.102(d), filed June 8, 2010 to make the above-identified application special.

The request and petition are **GRANTED**.

A grantable request to participate in the PPH program and petition to make special require:

(1) The U.S. application must validly claim priority under 35 U.S.C. 119(a) to one or more applications filed in the JPO;
(2) Applicant must submit a copy of the allowable/patentable claim(s) from the JPO application(s) along with an English translation thereof and a statement that the English translation is accurate;
(3) All the claims in the U.S. application must sufficiently correspond or be amended to sufficiently correspond to the allowable/patentable claim(s) in the JPO application(s);
(4) Examination of the U.S. application has not begun;
(5) Applicant must submit a copy of all the office actions from each of the JPO application(s) containing the allowable/patentable claim(s) along with an English translation thereof and a statement that the English translation is accurate;
(6) Applicant must submit an IDS listing the documents cited by the JPO examiner in the JPO office action along with copies of documents except U.S. patents or U.S. patent application publications; and
(7) The required petition fee under 37 CFR 1.17(h).

The request to participate in the PPH program and petition comply with the above requirements. Accordingly, the above-identified application has been accorded "special" status.

Telephone inquiries concerning this decision should be directed to Kenneth Wieder at 571-272-2986.

All other inquiries concerning the examination or status of the application should be directed to Patent Application Information Retrieval (PAIR) system.

The application is being forwarded to the examiner for action on the merits commensurate with this decision.

/Kenneth A. Wieder/

Kenneth Wieder
Quality Assurance Specialist
Technology Center 2600
Communications

UNITED STATES PATENT AND TRADEMARK OFFICE

Commissioner for Patents
United States Patent and Trademark Office
P.O. Box 1450
Alexandria, VA 22313-1450
www.uspto.gov

JAMES G. MCEWEN
STEIN, MCEWEN & BUI, LLP
1400 EYE ST., NW, SUITE 300
WASHINGTON, DC 20005

COPY MAILED

NOV 28 2008

OFFICE OF PETITIONS

In re Application of	:	
Rainer GAUS, et al	:	
Application No. 11/579,256	:	DECISION ON PETITION
Filed: February 12, 2007	:	TO WITHDRAW
Attorney Docket No. 0034.1003	:	FROM RECORD
	:	

This is a decision on the Request to Withdraw as attorney or agent of record under 37 C.F.R. § 1.36(b), filed March 15, 2007.

The request is **APPROVED**.

A grantable request to withdraw as attorney/agent of record must be signed by every attorney/agent seeking to withdraw or contain a clear indication that one attorney is signing on behalf of another/others. A request to withdraw will not be approved unless at least 30 (thirty) days would remain between the date of approval and the later of the expiration date of a time to file a response or the expiration date of the maximum time period which can be extended under 37 C.F.R. § 1.136(a).

The request was signed by James G. McEwen on behalf of all attorneys/agents of record associated with Customer Number 49455.

All attorneys/agents of record associated with Customer Number 49455 have been withdrawn.

George H. Spencer is not part of Customer Number 49455.

Applicant is reminded that there is no attorney of record at this time.

All communications from the Office will continue to be directed to the address indicated below until otherwise properly notified by the applicant.

Telephone inquiries concerning this decision should be directed to the undersigned at 571-272-6735.

Diane Goodwyn
Petitions Examiner
Office of Petitions

cc: GEORGE H. SPENCER
DENNISON, SCHULTZ & MACDONALD
1727 KING STREET, SUITE 105
ALEXANDRIA, VA 22314-2700

UNITED STATES PATENT AND TRADEMARK OFFICE

Commissioner for Patents
United States Patent and Trademark Office
P.O. Box 1450
Alexandria, VA 22313-1450
www.uspto.gov

DENNISON, SCHULTZ & MACDONALD
1727 KING STREET
SUITE 105
ALEXANDRIA VA 22314

COPY MAILED
MAR 17 2010

In re Application of	:	
Gaus et al.	:	ON PETITION
Application No. 11/579,256	:	
Filed: December 12, 2007	:	
Attorney Docket No. 0034.1003		

This is a decision on the petition under 37 CFR 1.181, filed February 2, 2009, in which petitioner is seeking confirmation as power of attorney in the above-identified application.

The request is **DISMISSED**.

A review of the file record indicates that George H. Spencer does not have power of attorney in this patent application. A review of USPTO records reveals that the Change of Address Notice filed May 14, 2007 was improperly recorded as a Power of Attorney by the USPTO. Currently, there is no power of attorney assigned in the above-identified application.

Telephone inquires concerning this decision should be directed to Petitions Examiner Joan Olszewski at 571-272-7751.

David Bucci
Petitions Examiner
Office of Petitions

UNITED STATES PATENT AND TRADEMARK OFFICE

Commissioner for Patents
United States Patent and Trademark Office
P.O. Box 1450
Alexandria, VA 22313-1450
www.uspto.gov

MARK P. STONE
ATTORNEY AT LAW
50 BROADWAY
HAWTHORNE, NY 10532

MAILED

OCT 21 2009

OFFICE OF PETITIONS

In re Application of	:	
Erik BACKLUND, et *al.*	:	
Application No. 11/579,260	:	DECISION ON PETITION
Filed: November 1, 2006	:	UNDER 37 CFR 1.181
Attorney Docket No. **PAH-109**	:	

This is a decision on the petition, filed October 31, 2008, which is being treated as a petition under 37 CFR 1.181 (no fee), requesting withdrawal of the holding of abandonment in the above-identified application.

The petition is **GRANTED**.

This application was held abandoned for failure to timely respond to the Office action of March 7, 2008, which set a three (3) month shortened statutory period for reply. A reply was due on or before June 7, 2008.

Petitioner states that a reply was in fact timely filed. Petitioner also states that as a result of a typographical error, the amendment, petition for two month extension of time and credit card payment form each included the incorrect serial number "10/579,260", instead of the correct serial number "11/579,260". To support this assertion, petitioner has submitted a copy of a return postcard which acknowledges receipt by the U.S. Patent and Trademark Office (USPTO) on August 7, 2008. A copy of the previously submitted reply accompanies the petition.

The amendment and extension of time acknowledged as having been received in the USPTO on August 7, 2008 is not of record in the application file but has been located. MPEP 503 states that "[a] post card receipt which itemizes and properly identifies the papers which are being filed serves as *prima facie* evidence of receipt in the USPTO of all the items listed thereon on the date stamped thereon by the USPTO." Accordingly, it is concluded that the amendment and extension of time was timely received in the USPTO although incorrectly matched to application 10/579,260.

In view of the above, the holding of abandonment is hereby withdrawn and the application restored to pending status.

The copy of the reply supplied with the petition will be accepted in place of the reply shown to have been received by the USPTO on August 7, 2008.

Telephone inquires regarding this decision may be directed to Monica A. Graves at 571-272-7253.

This application is being referred to Technology Center AU 3653 for appropriate action in the normal course of business on the reply received with petition.

Brian W. Brown
Petitions Examiner
Office of Petitions

UNITED STATES PATENT AND TRADEMARK OFFICE

Commissioner for Patents
United States Patent and Trademark Office
P.O. Box 1450
Alexandria, VA 22313-1450
www.uspto.gov

DRINKER BIDDLE & REATH
ATTN: INTELLECTUAL PROPERTY GROUP
ONE LOGAN SQUARE
18TH AND CHERRY STREETS
PHILADELPHIA PA 19103-6996

COPY MAILED

FEB 25 2008

OFFICE OF PETITIONS

In re Application of :
COOPER, et al. :
Application No. 11/579,264 :
Filed: November 1, 2006 :
Attorney Docket No. **35669-0120-00-US(232586)** :

DECISION ON PETITION
TO MAKE SPECIAL UNDER
37 CFR 1.102(c)(1)

This is a decision on the petition under 37 CFR 1.102(c)(1), filed February 1, 2008, to make the above-identified application special based on applicant's age as set forth in M.P.E.P. § 708.02, Section IV.

The petition is **GRANTED.**

A grantable petition to make an application special under 37 CFR 1.102(c)(1) and MPEP § 708.02, Section IV: Applicant's Age must be accompanied by evidence showing that at least one of the applicants is 65 years of age, or more, such as a birth certificate or a statement by applicant. No fee is required

The instant petition includes the declaration of inventor B. William Cooper, attesting to his or her age. Accordingly, the above-identified application will be accorded "special" status.

Inquiries concerning either the examination or status of the application should be directed to the Office of Patent Application Processing at 571-272-4000.

Telephone inquiries concerning this decision should be directed to the undersigned at 571-272-7253.

The application is being forwarded to the office of Initial Patent Examination for processing. This application will be accorded "special" status when pre-examination processing is done.

Monica A. Graves
Petitions Examiner
Office of Petitions

UNITED STATES PATENT AND TRADEMARK OFFICE

COMMISSIONER FOR PATENTS
UNITED STATES PATENT AND TRADEMARK OFFICE
P.O. BOX 1450
ALEXANDRIA, VA 22313-1450
www.uspto.gov

27 NOV 2006

DORSEY & WHITNEY LLP
INTELLECTUAL PROPERTY DEPARTMENT
SUITE 1500
50 SOUTH SIXTH STREET
MINNEAPOLIS, MN 55402-1498

In re Application of MEREDITH et al	:	
U.S. Application No.: 11/579,288	:	
PCT Application No.: PCT/US2004/034527	:	
Int. Filing Date: 20 October 2004	:	DECISION
Priority Date Claimed: 28 October 2003	:	
Attorney Docket No.: 33429/PCT	:	
For: ANTI-REFLECTIVE COATING FOR A SUBSTRATE	:	

This is in response to applicant's "Petition for Revival of an International Application for Patent Designating the U.S. Abandoned Unintentionally Under 37 CFR 1.137(b)" filed 02 November 2006.

BACKGROUND

On 20 October 2004, applicant filed international application PCT/US2004/034527, which claimed priority of an earlier United States application filed 28 October 2003. The thirty-month period for paying the basic national fee in the United States expired on 28 April 2006.

International application PCT/US2004/034527 became abandoned as to the United States for failure to timely pay the basic national fee.

On 02 November 2006, applicant filed the present petition under 37 CFR 1.137(b).

DISCUSSION

Under 37 CFR 1.137(b), a petition requesting that an application be revived on the grounds of unintentional abandonment must be accompanied by: (1) the required reply unless previously filed, (2) the petition fee as set forth in 37 CFR 1.17(m), (3) a statement that the entire delay in filing the required reply from the due date for the reply until the filing of a grantable petition was unintentional, and (4) a terminal disclaimer if the application was filed before 08 June 1995.

With regard to item (1), applicant has provided the required basic national fee under 35 U.S.C. 371.

With regard to item (2), applicant has provided the required petition fee.

With regard to item (3), applicant has provided the required statement.

With regard to item (4), because the international application was filed after 08 June 1995, no terminal disclaimer is required.

CONCLUSION

For the reasons above, the petition under 37 CFR 1.137(b) is GRANTED.

This application is being forwarded to the United States Designated/Elected Office (DO/EO/US) for further processing in accordance with this decision, including preparation and mailing of a Notification of Missing Requirements under 35 U.S.C. 371 (Form PCT/DO/EO/905) indicating that an oath or declaration in compliance with 37 CFR 1.497 must be filed.

BryanLin

Bryan Lin
PCT Legal Examiner
PCT Legal Office

Telephone: 571-272-3303
Facsimile: 571-273-0459

0 6 FEB 2008

UNITED STATES PATENT AND TRADEMARK OFFICE

COMMISSIONER FOR PATENTS
UNITED STATES PATENT AND TRADEMARK OFFICE
P.O. BOX 1450
ALEXANDRIA, VA 22313-1450
www.uspto.gov

KENYON & KENYON LLP
ONE BROADWAY
NEW YORK, NY 10004

In re Application of KUDICKE et al	:	
U.S. Application No.: 11/579,308	:	
PCT Application No.: PCT/EP2005/051519	:	DECISION
Int. Filing Date: 05 April 2005	:	
Priority Date Claimed: 30 April 2004	:	
Attorney Docket No.: 10191/4620	:	
For: METHOD OF DIAGNOSIS FOR CONTROL CIRCUITS	:	

This is in response to applicant's "Petition for Revival of an International Application for Patent Designating the U.S. Abandoned Unintentionally Under 37 CFR 1.137(b)" filed 28 January 2008.

BACKGROUND

On 05 April 2005, applicant filed international application PCT/EP2005/051519, which claimed priority of an earlier Germany application filed 30 April 2004. A copy of the international application was communicated to the USPTO from the International Bureau on 10 November 2005. The thirty-month period for paying the basic national fee in the United States expired on 30 October 2006.

International application PCT/EP2005/051519 became abandoned as to the United States for failure to timely pay the basic national fee.

On 28 January 2008, applicant filed the present petition under 37 CFR 1.137(b).

DISCUSSION

Under 37 CFR 1.137(b), a petition requesting that an application be revived on the grounds of unintentional abandonment must be accompanied by: (1) the required reply unless previously filed, (2) the petition fee as set forth in 37 CFR 1.17(m), (3) a statement that the entire delay in filing the required reply from the due date for the reply until the filing of a grantable petition was unintentional, and (4) a terminal disclaimer if the application was filed before 08 June 1995.

With regard to item (1), applicant has provided the required reply under 35 U.S.C. 371.

With regard to item (2), applicant has provided the required petition fee.

With regard to item (3), applicant has provided the required statement.

With regard to item (4), because the international application was filed after 08 June 1995, no terminal disclaimer is required.

CONCLUSION

For the reasons above, the petition under 37 CFR 1.137(b) is GRANTED.

This application is being forwarded to the United States Designated/Elected Office (DO/EO/US) for further processing in accordance with this decision, including preparation and mailing of a Notification of Missing Requirements under 35 U.S.C. 371 (Form PCT/DO/EO/905) indicating that an oath or declaration in compliance with 37 CFR 1.497 must be filed.

Bryan Lin

Bryan Lin
PCT Legal Examiner
PCT Legal Office

Telephone: 571-272-3303
Facsimile: 571-273-0459

15 MAY 2008

UNITED STATES PATENT AND TRADEMARK OFFICE

Commissioner for Patents
United States Patent and Trademark Office
P.O. Box 1450
Alexandria, VA 22313-1450
www.uspto.gov

Striker, Striker & Stenby
103 East Neck Road
Huntington, New York 11743

In re Application of	:	
MILLER et al.	:	
Application No.: 11/579,312	:	DECISION ON REQUEST
PCT No.: PCT/DE2005/001030	:	
Int. Filing Date: 09 June 2005	:	
Priority Date: 14 June 2004	:	
Attorney Docket No.: 3868	:	
For: GUIDEWAY BEAM AND MAGNETIC LEVITATION RAILWAY COMPRISING THE SAME		

This decision is issued in response to applicant's "Petition under 37 CFR 1.48 to Amend Inventorship of Entry into National Phase Application of PCT/DE2005/001030" filed 07 January 2008 which is being treated as a Petition to Correct Inventorship under 37 CFR 1.497(d).

BACKGROUND

On 09 June 2005, applicant filed international application PCT/DE2005/001030 which claimed a priority date of 14 June 2004. The published international application identified four applicant/inventors for the United States: Luitpold Miller; Werner Hufenbach; Qinghua Zheng and Klaus Kunze. The deadline for submission of the basic national fee was thirty months from the priority date, i.e., 14 December 2006.

On 01 November 2006, applicant filed a transmittal letter for entry into the national stage in the United States accompanied by, among other materials, payment of the basic national fee; a translation of the international application; a preliminary amendment; and an executed declaration. The declaration was executed by: Luitpold Miller; Werner Hufenbach; Qinghua Zheng; Klaus Kunze and Gerhard Eckart.

On 19 October 2007, the United Stated Designated/Elected Office mailed a Notification of Missing Requirements (Form PCT/DO/EO/905) indicating that an oath or declaration in compliance with 37 CFR 1.497(a) and (b) must be filed. (The declaration filed 01 November 2006 was defective because it indicated an additional inventor not listed on the published international application.) The notification set a two-month time limit in which to respond.

On 07 January 2008 , applicant filed a request under 37 CFR 1.497(d).

DISCUSSION

As defined in 37 CFR 1.9(a)(3), a U.S. national stage application must first comply with the requirements of 35 U.S.C. 371(c) to constitute a "nonprovisional" application, therefore, applicants' request will be treated under 37 CFR 1.497(d). The present submission seeks to correct the inventorship so as to add inventor Gerhard Eckart to the application. Where, as here, the inventorship in the national stage declaration is not consistent with the inventorship in the international application, applicants must correct the inventorship pursuant to 37 CFR 1.497(d), which states the following:

> (d) If the oath or declaration filed pursuant to 35 U.S.C. 371(c)(4) and this section names an inventive entity different from the inventive entity set forth in the international application, the oath or declaration must be accompanied by:
>
> > (1) A statement from each person being added as an inventor and from each person being deleted as an inventor that any error in inventorship in the international application occurred without deceptive intention on his or her part;
> >
> > (2) The processing fee set forth in § 1.17; and
> >
> > (3) If an assignment has been executed by any of the original named inventors, the written consent of the assignees (see § 3.73(b) of this chapter).
> >
> > (4) any new oath or declaration required by paragraph (f) of this subsection.

Applicant has submitted a statement from the person being added as an inventor in compliance with 37 CFR 1.497(d)(1).

The authorization contained in the 07 January 2008 submission will be used to charge Deposit Account No. 19-4675 the $130 processing fee required under 37 CFR 1.1497(d)(2).

Regarding item (3), applicant has not submitted the consent of assignee to the change of inventorship. The assignment recorded with the Office identifies Thyssenkrupp Transrapid GMBH as the assignee. Before item (3) can be considered satisfied, applicant must provide the written consent of assignee to the change of inventorship. Any such consent of assignee must be accompanied by a proper statement under 37 CFR 3.73(b).

Item (4) is not applicable to this situation.

CONCLUSION

Applicant's request to add inventor Gerhard Eckart under 37 CFR 1.497(d) is **DISMISSED** without prejudice. The inventors of record remain the inventors named on the international application.

Applicant must file a proper response to this decision within **TWO (2) MONTHS** from the mail date indicated above. A proper response must include a written consent of assignee in compliance with 37 CFR 3.73(b).

Failure to file a timely and proper response will result in abandonment of the application. Extensions of time may be obtained under 37 CFR 1.136(a).

Please direct further correspondence with respect to this matter to the Assistant Commissioner for Patents, Mail Stop PCT, Commissioner for Patents, P.O. Box 1450, Alexandria, Virginia 22313-1450, with the contents of the letter marked to the attention of the Office of PCT Legal Administration.

Anthony Smith

Anthony Smith
Attorney-Advisor
Office of PCT Legal Administration
Tel: (571) 272-3298
Fax: (571) 273-0459

UNITED STATES PATENT AND TRADEMARK OFFICE

0 1 JUL 2008

Commissioner for Patents
United States Patent and Trademark Office
P.O. Box 1450
Alexandria, VA 22313-1450
www.uspto.gov

Striker, Striker & Stenby
103 East Neck Road
Huntington, New York 11743

In re Application of MILLER et al. Application No.: 11/579,312 PCT No.: PCT/DE2005/001030 Int. Filing Date: 09 June 2005 Priority Date: 14 June 2004 Attorney Docket No.: 3868 For: GUIDEWAY BEAM AND MAGNETIC LEVITATION RAILWAY COMPRISING THE SAME	:	DECISION ON REQUEST

This decision is issued in response to applicant's "Renewed Petition under 37 CFR 1.48 to Amend Inventorship of Entry into National Phase Application of PCT/DE 2005/ 001030 which is being treated as a Petition to Correct Inventorship under 37 CFR 1.497(d)" filed 10 June 2008.

BACKGROUND

On 09 June 2005, applicant filed international application PCT/DE2005/001030 which claimed a priority date of 14 June 2004. The published international application identified four applicant/inventors for the United States: Luitpold Miller; Werner Hufenbach; Qinghua Zheng and Klaus Kunze. The deadline for submission of the basic national fee was thirty months from the priority date, i.e., 14 December 2006.

On 01 November 2006, applicant filed a transmittal letter for entry into the national stage in the United States accompanied by, among other materials, payment of the basic national fee; a translation of the international application; a preliminary amendment; and an executed declaration. The declaration was executed by: Luitpold Miller; Werner Hufenbach; Qinghua Zheng; Klaus Kunze and Gerhard Eckart.

On 19 October 2007, the United Stated Designated/Elected Office mailed a Notification of Missing Requirements (Form PCT/DO/EO/905) indicating that an oath or declaration in compliance with 37 CFR 1.497(a) and (b) must be filed. (The declaration filed 01 November 2006 was defective because it indicated an additional inventor not listed on the published international application.) The notification set a two-month time limit in which to respond.

On 07 January 2008, applicant filed a request under 37 CFR 1.497(d). In a decision dated 15 May 2008, applicant's request under 37 CFR 1.497(d) was dismissed without prejudice.

On 10 June 2008, applicant filed "Renewed Petition under 37 CFR 1.48 to Amend Inventorship of Entry into National Phase Application of PCT/DE2005/001030 which is being treated as a Petition to Correct Inventorship under 37 CFR 1.497(d)."

DISCUSSION

As defined in 37 CFR 1.9(a)(3), a U.S. national stage application must first comply with the requirements of 35 U.S.C. 371(c) to constitute a "nonprovisional" application, therefore, applicant's request will be treated under 37 CFR 1.497(d). The present submission seeks to correct the inventorship so as to add inventor Gerhard Eckart to the application. Where, as here, the inventorship in the national stage declaration is not consistent with the inventorship in the international application, applicants must correct the inventorship pursuant to 37 CFR 1.497(d), which states the following:

> (d) If the oath or declaration filed pursuant to 35 U.S.C. 371(c)(4) and this section names an inventive entity different from the inventive entity set forth in the international application, the oath or declaration must be accompanied by:
>
> > (1) A statement from each person being added as an inventor and from each person being deleted as an inventor that any error in inventorship in the international application occurred without deceptive intention on his or her part;
> >
> > (2) The processing fee set forth in § 1.17; and
> >
> > (3) If an assignment has been executed by any of the original named inventors, the written consent of the assignees (see § 3.73(b) of this chapter).
> >
> > (4) any new oath or declaration required by paragraph (f) of this subsection.

Items (1), (2), and (4) have been satisfied.

Regarding item (3), applicant has submitted a document entitled "Consent of Assignee" which states that the assignee consents to the addition of Gerhard Eckart as an inventor herein. However, pursuant to 37 CFR 1.497(d)(3), the consent of the assignee must be submitted in compliance with 37 CFR 3.73(b). Here, the statement executed by the assignee does not comply with the requirements of 37 CFR 3.73(b)(2). Specifically, the persons (Mr. Schulte and Dr. Koehne,) signing the "Consent of Assignee" does not have apparent authority to act on behalf of the assignee or states that they are authorized to act

on behalf of the assignee (see MPEP 201.03(II)(D)). Item (3) is therefore not satisfied.

CONCLUSION

Applicant's request to add inventor Gerhard Eckart under 37 CFR 1.497(d) is **DISMISSED** without prejudice. The inventors of record remain the inventors named on the international application.

Applicant must file a proper response to this decision within **TWO (2) MONTHS** from the mail date indicated above. A proper response must include a written consent of assignee in compliance with 37 CFR 3.73(b).

Failure to file a timely and proper response will result in abandonment of the application. Extensions of time may be obtained under 37 CFR 1.136(a).

Please direct further correspondence with respect to this matter to the Assistant Commissioner for Patents, Mail Stop PCT, Commissioner for Patents, P.O. Box 1450, Alexandria, Virginia 22313-1450, with the contents of the letter marked to the attention of the Office of PCT Legal Administration.

Anthony Smith
Attorney-Advisor
Office of PCT Legal Administration
Tel: (571) 272-3298
Fax: (571) 273-0459

1 6 SEP 2008

UNITED STATES PATENT AND TRADEMARK OFFICE

Commissioner for Patents
United States Patent and Trademark Office
P.O. Box 1450
Alexandria, VA 22313-1450
www.uspto.gov

Striker, Striker & Stenby
103 East Neck Road
Huntington, New York 11743

In re Application of	:	
MILLER et al.	:	
Application No.: 11/579,312	:	DECISION ON REQUEST
PCT No.: PCT/DE2005/001030	:	
Int. Filing Date: 09 June 2005	:	
Priority Date: 14 June 2004	:	
Attorney Docket No.: 3868	:	
For: GUIDEWAY BEAM AND MAGNETIC LEVITATION RAILWAY COMPRISING THE SAME		

In a decision mailed by this Office on 01 July 2008, applicants' request to correct inventorship was dismissed without prejudice for failure to satisfy all the requirements of 37 CFR 1.497(d). Specifically, applicants had not provided the required consent of the assignee to the requested change in inventorship.

On 26 August 2008, applicants filed the renewed request under 37 CFR 1.497(d) considered herein. The submission included the consent of the assignee to the requested correct of inventorship, in the form required under 37 CFR 1.497(d)(3) and 3.73(b). Accordingly, applicants have now satisfied all the requirements to correct the inventorship herein.

Applicants' request to correct inventorship under 37 CFR 1.497(d) is <u>GRANTED</u>.

The inventorship herein is corrected to add Gerhard Eckart as an additional inventor of record. Based on this correction, the declaration filed 01 November 2006 is now acceptable under 37 CFR 1.497.

This application is being forwarded to the National Stage Processing Branch of the Office Of PCT Operations for further processing in accordance with this decision. The date under 35 U.S.C. 371(c)(1), (c)(2), and (c)(4) is 01 November 2006.

Anthony Smith
Attorney-Advisor
Office of PCT Legal Administration
Tel: (571) 272-3298
Fax: (571) 273-0459

UNITED STATES PATENT AND TRADEMARK OFFICE

Commissioner for Patents
United States Patent and Trademark Office
P.O. Box 1450
Alexandria, VA 22313-1450
www.uspto.gov

MICHAEL P. SANDONATO
FITZPATRICK CELLA HARPER & SCINTO
30 ROCKEFELLER PLAZA
NEW YORK NY 10112

COPY MAILED

JUL 1 4 2009

OFFICE OF PETITIONS

In re Application of	:	
Thierry Sartorius	:	
Application No. 11/579,316	:	DECISION ON PETITION
Filed: November 1, 2006	:	
Attorney Docket No. 03989.000200	:	

This is a decision on the petition under the unintentional provisions of 37 CFR 1.137(b), filed April 28, 2009, to revive the above-identified application.

The petition is **GRANTED**.

The application became abandoned for failure to reply in a timely manner to the non-final rejection, mailed August 7, 2008, which set a shortened statutory period for reply of three (3) months. No extension of time under the provisions of 27 CFR 1.136(a) were obtained. Accordingly, the application became abandoned on November 10, 2008.

The petition satisfies the requirements of 37 CFR 1.137(b) in that petitioner has supplied (1) the reply in the form of an amendment, (2) the petition fee of $810, and (3) a proper statement of unintentional delay.

Telephone inquiries concerning this decision should be directed to Newton Edwards at (571) 272-6052or in his absence to the undersigned at 571-272-7099.

This application is being referred to Technology Center AU 3753 for appropriate action by the Examiner in the normal course of Business to the reply received.

David Bucci
Petitions Examiner
Office of Petitions

UNITED STATES PATENT AND TRADEMARK OFFICE

UNITED STATES DEPARTMENT OF COMMERCE
United States Patent and Trademark Office
Address: COMMISSIONER FOR PATENTS
P.O. Box 1450
Alexandria, Virginia 22313-1450
www.uspto.gov

MILLEN, WHITE, ZELANO & BRANIGAN, P.C.
2200 CLARENDON BLVD.
SUITE 1400
ARLINGTON, VA 22201

Mail Date: 04/20/2010

Applicant	: Jean Jacques Zeiller	: DECISION ON REQUEST FOR
Patent Number	: 7632846	: RECALCULATION of PATENT
Issue Date	: 12/15/2009	: TERM ADJUSTMENT IN VIEW
Appliction No	: 11/579,361	: OF WYETH AND NOTICE OF INTENT TO
Filed	: 11/02/2006	: ISSUE CERTIFICATE OF CORRECTION
		:

The Request for Recalculation is **GRANTED** to the extent indicated.

The patent term adjustment has been determined to be **330** days. The USPTO will *sua sponte* issue a certificate of correction reflecting the amount of PTA days determined by the recalculation.

Prior to the issuance of the certificate of correction, the USPTO will afford patentee an opportunity to be heard and request reconsideration. Accordingly, patentee has **one month or thirty (30) days**, whichever is longer, to file a request for reconsideration of this patent term adjustment calculation. See 35 U.S.C. 154(b)(3)(B)(ii) and 37 CFR 1.322(a)(4). No extensions of time will be granted under 37 CFR 1.136.

Patentee should use document code PET.OP if electronically filing a request for reconsideration of this patent term adjustment calculation. The patentee must also include the information required by 37 CFR 1.705(b)(2) and the fee required by 37 CFR 1.18(e). If patentee does not file a timely request for reconsideration of this patent term adjustment calculation including the information required by 37 CFR 1.705(b)(2) and the fee required by 37 CFR 1.18(e), the USPTO will issue a certificate of correction reflecting the PTA determination noted above.

Patentee should be aware that in order to preserve the right to review in the United States District Court for the District of Columbia of the USPTO patent term adjustment determination, patentee must ensure that he or she also take the steps required under 35 U.S.C. 154(b)(4)(A) in a timely manner. Nothing in the request for recalculation should be construed as providing an alternative time frame for commencing a civil action under 35 U.S.C. 154(b)(4)(A).

Any questions concerning this decision should be directed to the Office of Patent Legal Administration at 571-272-7702.

UNITED STATES PATENT AND TRADEMARK OFFICE

UNITED STATES DEPARTMENT OF COMMERCE
United States Patent and Trademark Office
Address: COMMISSIONER FOR PATENTS
P.O. Box 1450
Alexandria, Virginia 22313-1450
www.uspto.gov

COLLARD & ROE, P.C.
1077 NORTHERN BOULEVARD
ROSLYN, NY 11576

Mail Date: 04/21/2010

Applicant	: Walter Baratta	: DECISION ON REQUEST FOR
Patent Number	: 7638628	: RECALCULATION of PATENT
Issue Date	: 12/29/2009	: TERM ADJUSTMENT IN VIEW
Appliction No	: 11/579,371	: OF WYETH AND NOTICE OF INTENT TO
Filed	: 11/02/2006	: ISSUE CERTIFICATE OF CORRECTION
		:

The Request for Recalculation is **GRANTED** to the extent indicated.

The patent term adjustment has been determined to be **504** days. The USPTO will *sua sponte* issue a certificate of correction reflecting the amount of PTA days determined by the recalculation.

Prior to the issuance of the certificate of correction, the USPTO will afford patentee an opportunity to be heard and request reconsideration. Accordingly, patentee has **one month or thirty (30) days**, whichever is longer, to file a request for reconsideration of this patent term adjustment calculation. See 35 U.S.C. 154(b)(3)(B)(ii) and 37 CFR 1.322(a)(4). No extensions of time will be granted under 37 CFR 1.136.

Patentee should use document code PET.OP if electronically filing a request for reconsideration of this patent term adjustment calculation. The patentee must also include the information required by 37 CFR 1.705(b)(2) and the fee required by 37 CFR 1.18(e). If patentee does not file a timely request for reconsideration of this patent term adjustment calculation including the information required by 37 CFR 1.705(b)(2) and the fee required by 37 CFR 1.18(e), the USPTO will issue a certificate of correction reflecting the PTA determination noted above.

Patentee should be aware that in order to preserve the right to review in the United States District Court for the District of Columbia of the USPTO patent term adjustment determination, patentee must ensure that he or she also take the steps required under 35 U.S.C. 154(b)(4)(A) in a timely manner. Nothing in the request for recalculation should be construed as providing an alternative time frame for commencing a civil action under 35 U.S.C. 154(b)(4)(A).

Any questions concerning this decision should be directed to the Office of Patent Legal Administration at 571-272-7702.

UNITED STATES PATENT AND TRADEMARK OFFICE

Commissioner for Patents
United States Patent and Trademark Office
P.O. Box 1450
Alexandria, VA 22313-1450
www.uspto.gov

MAIL

DEC 02 2008

DIRECTOR'S OFFICE
TECHNOLOGY CENTER 2600

Dickinson Wright PLLC
James E. Ledbetter, Esq.
International Square
1875 Eye Street, N.W., Suite 1200
Washington DC 20006

In re Application of	:	
IOCHI, HITOSHI, et al.	:	DECISION ON REQUEST TO
Application No. 11/579,373	:	PARTICIPATE IN PATENT
Filed: November 2, 2006	:	PROSECUTION HIGHWAY
Attorney Docket No. L9289.06220	:	PILOT PROGRAM AND PETITION
	:	TO MAKE SPECIAL UNDER
	:	37 CFR 1.102(d)

This is a decision on the request to participate in the Patent Prosecution Highway (PPH) pilot program and the petition under 37 CFR 1.102(d), filed September 30, 2008, to make the above-identified application special.

The request and petition are **DISMISSED**.

A grantable request to participate in the PPH pilot program and petition to make special require:

(1) The U.S. application must validly claim priority under 35 U.S.C. 119(a) to one or more applications filed in the JPO;
(2) Applicant must submit a copy of the allowable/patentable claim(s) from the JPO application(s) along with an English translation thereof and a statement that the English translation is accurate;
(3) All the claims in the U.S. application must sufficiently correspond or be amended to sufficiently correspond to the allowable/patentable claim(s) in the JPO application(s);
(4) Examination of the U.S. application has not begun;
(5) Applicant must submit a copy of all the office actions from each of the JPO application(s) containing the allowable/patentable claim(s) along with an English translation thereof and a statement that the English translation is accurate;
(6) Applicant must submit an IDS listing the documents cited by the JPO examiner in the JPO office action along with copies of documents except U.S. patents or U.S. patent application publications; and
(7) The required petition fee under 37 CFR 1.17(h).

The request to participate in the PPH pilot program and petition is deficient as follows:

Petitioner has not complied with item 2 above in that although a translation of the claims has been submitted, the petition fails to include a copy of the actual allowable/patentable claims from the JPO application. The U.S. Patent and Trademark Office does not have the capability to download JP language documents from the Dossier Access System at this time.

Applicant is given a time period of **ONE MONTH or THIRTY DAYS**, whichever is longer, from the mailing date of this decision to correct the deficiencies. **NO EXTENSION OF TIME UNDER 37 CFR 1.136 IS PERMITTED.** If the deficiencies are not corrected with the time period given, the application will await action in its regular turn.

Response must be faxed to Kenneth Wieder at 571-273-2986 (RightFax) or 571-273-0308 or via EFS-web.

Telephone inquiries concerning this decision should be directed to Kenneth Wieder at 571-272-2986.

All other inquiries concerning the examination or status of the application should be directed to Patent Application Information Retrieval (PAIR) system.

Kenneth A. Wieder
Quality Assurance Specialist
Technology Center 2600
Communications

UNITED STATES PATENT AND TRADEMARK OFFICE

Commissioner for Patents
United States Patent and Trademark Office
P.O. Box 1450
Alexandria, VA 22313-1450
www.uspto.gov

MAIL

JAN 29 2009

DIRECTOR'S OFFICE
TECHNOLOGY CENTER 2600

Dickinson Wright PLLC
James E. Ledbetter, Esq.
International Square
1875 Eye Street, N.W., Suite 1200
Washington DC 20006

In re Application of	:	
IOCHI, HITOSHI, et al.	:	DECISION ON REQUEST TO
Application No. 11/579,373	:	PARTICIPATE IN PATENT
Filed: November 02, 2006	:	PROSECUTION HIGHWAY
Attorney Docket No. L9289.06220	:	PROGRAM AND PETITION
	:	TO MAKE SPECIAL UNDER
	:	37 CFR 1.102(d)

This is a decision on the request to participate in the Patent Prosecution Highway (PPH) program and the petition under 37 CFR 1.102(d), filed September 30, 2008 and December 22, 2008, to make the above-identified application special.

The request and petition are **GRANTED**.

A grantable request to participate in the PPH program and petition to make special require:

(1) The U.S. application must validly claim priority under 35 U.S.C. 119(a) to one or more applications filed in the JPO;
(2) Applicant must submit a copy of the allowable/patentable claim(s) from the JPO application(s) along with an English translation thereof and a statement that the English translation is accurate;
(3) All the claims in the U.S. application must sufficiently correspond or be amended to sufficiently correspond to the allowable/patentable claim(s) in the JPO application(s);
(4) Examination of the U.S. application has not begun;
(5) Applicant must submit a copy of all the office actions from each of the JPO application(s) containing the allowable/patentable claim(s) along with an English translation thereof and a statement that the English translation is accurate;
(6) Applicant must submit an IDS listing the documents cited by the JPO examiner in the JPO office action along with copies of documents except U.S. patents or U.S. patent application publications; and
(7) The required petition fee under 37 CFR 1.17(h).

The request to participate in the PPH program and petition comply with the above requirements. Accordingly, the above-identified application has been accorded "special" status.

Telephone inquiries concerning this decision should be directed to Kenneth Wieder at 571-272-2986.

All other inquiries concerning the examination or status of the application should be directed to Patent Application Information Retrieval (PAIR) system.

The application is being forwarded to the examiner for action on the merits commensurate with this decision.

Kenneth Wieder
Quality Assurance Specialist
Technology Center 2600
Communications

UNITED STATES PATENT AND TRADEMARK OFFICE

2 0 JAN 2010

Commissioner for Patents
United States Patent and Trademark Office
P.O. Box 1450
Alexandria, VA 22313-1450
www.uspto.gov

MARSHALL, GERSTEIN & BORUN LLP
233 SOUTH WACKER DRIVE
6300 SEARS TOWER
CHICAGO IL 60606-6357

In re Application of	:	
MOREL, Jean-Michel, et al.	:	
Application No.: 11/579,380	:	
PCT No.: PCT/FR2005/000897	:	DECISION ON
Int. Filing Date: 13 April 2005	:	
Priority Date: 05 May 2004	:	PETITION
Attorney Docket No.: 31207/42486	:	
For: IMAGE DATA PROCESSING METHOD BY REDUCING IMAGE NOISE, AND CAMERA INTEGRATING MEANS FOR IMPLEMENTING SAID METHOD	:	UNDER 37 CFR 1.181

This decision is in response to applicants' petition under 37 CFR 1.181 to withdraw the holding of abandonment filed in the United States Patent and Trademark Office on 28 October 2009.

BACKGROUND

On 21 July 2008, the Office mailed Notification of Missing Requirements (Form PCT/DO/EO/905) requiring the filing of an English translation, an oath or declaration and the surcharge for late filing of the search fee, examination fee or oath or declaration.

On 22 September 2008, applicants filed an English translation and the processing fee and indicated that they had filed a declaration under PCT Rule 4.17, during the international phase.

On 31 August 2009, the Office mailed Notice of Abandonment Under 37 CFR 1.53(f) or (g), indicating that the application went abandoned for failure to timely reply to the Notice to File Missing Parts mailed 21 July 2008.

On 28 October 2009, applicants filed this petition to withdraw the holding of abandonment.

DISCUSSION

A declaration of the inventors was supplied during the international phase. The Notification of Missing Requirements (Form PCT/DO/EO/905) does not address it. It complies

with 37 CFR 1.497(a)-(b). The requirement in the Notification for an oath or declaration and the surcharge are vacated.

The Notice of Abandonment mailed 31 August 2009 is not appropriate for a filing under 35 USC 371. A Notice to Filing Missing Parts never issued in this application and the 22 September 2008 submission is a proper reply to the Notification of Missing Requirements. It is vacated.

CONCLUSION

For the reasons set forth above, the petition under 37 CFR 1.181 is **GRANTED**.

The Notice of Abandonment Under 37 CFR 1.53(f) or (g) mailed 31 August 2009 is **VACATED**.

This application is being forwarded to the National Stage Processing Branch of the Office of Patent Application Processing for further processing in accordance with this decision.

/Erin P. Thomson/

Erin P. Thomson
Attorney Advisor
PCT Legal Administration

Telephone: (571) 272-3292

15 DEC 2006

UNITED STATES PATENT AND TRADEMARK OFFICE

COMMISSIONER FOR PATENTS
UNITED STATES PATENT AND TRADEMARK OFFICE
P.O. BOX 1450
ALEXANDRIA, VA 22313-1450
www.uspto.gov

HOWREY LLP
C/O IP DOCKETING DEPARTMENT
2941 FAIRVIEW PARK DR., SUITE 200
FALLS CHURCH, VA 22042

In re Application of EIJSBOUTS et al	:	
U.S. Application No.: 11/579,391	:	
PCT Application No.: PCT/EP2005/004265	:	
Int. Filing Date: 19 April 2005	:	DECISION
Priority Date Claimed: 22 April 2004	:	
Attorney Docket No.: 00137.0093.PC0500	:	
For: HYDROTREATING CATALYST	:	
CONTAINING A GROUP V METAL	:	

This is in response to applicant's "Petition for Revival of an International Application for Patent Designating the U.S. Abandoned Unintentionally Under 37 CFR 1.137(b)" filed 02 November 2006.

BACKGROUND

On 19 April 2005, applicant filed international application PCT/EP2005/004265, which claimed priority of an earlier United States application filed 22 April 2004. A copy of the international application was communicated to the USPTO from the International Bureau on 03 November 2005. The thirty-month period for paying the basic national fee in the United States expired on 22 October 2006.

International application PCT/EP2005/004265 became abandoned as to the United States for failure to timely pay the basic national fee.

On 02 November 2006, applicant filed the present petition under 37 CFR 1.137(b).

DISCUSSION

Under 37 CFR 1.137(b), a petition requesting that an application be revived on the grounds of unintentional abandonment must be accompanied by: (1) the required reply unless previously filed, (2) the petition fee as set forth in 37 CFR 1.17(m), (3) a statement that the entire

delay in filing the required reply from the due date for the reply until the filing of a grantable petition was unintentional, and (4) a terminal disclaimer if the application was filed before 08 June 1995.

With regard to item (1), applicant has provided the required basic national fee under 35 U.S.C. 371.

With regard to item (2), applicant has provided the required petition fee.

With regard to item (3), applicant has provided the required statement.

With regard to item (4), because the international application was filed after 08 June 1995, no terminal disclaimer is required.

CONCLUSION

For the reasons above, the petition under 37 CFR 1.137(b) is GRANTED.

This application is being forwarded to the United States Designated/Elected Office (DO/EO/US) for further processing in accordance with this decision, including preparation and mailing of a Notification of Missing Requirements under 35 U.S.C. 371 (Form PCT/DO/EO/905) indicating that an oath or declaration in compliance with 37 CFR 1.497 must be filed.

Bryan Lin
PCT Legal Examiner
PCT Legal Office

Telephone: 571-272-3303
Facsimile: 571-273-0459

UNITED STATES PATENT AND TRADEMARK OFFICE

Commissioner for Patents
United States Patent and Trademark Office
P.O. Box 1450
Alexandria, VA 22313-1450
www.uspto.gov

Ropes & Gray LLP
Patent Docketing 39/41
One International Place
Boston, MA 02110-2624

COPY MAILED

SEP 2 4 2008

OFFICE OF PETITIONS

In re Application of	:	
Russell Taylor	:	
Application No. 11/579,455	:	DECISION ON PETITION
Filed: November 19, 2007	:	TO WITHDRAW
Attorney Docket No. CKFW-P01-013	:	FROM RECORD
	:	

This is a decision on the Request to Withdraw as attorney or agent of record under 37 C.F.R. § 1.36(b), filed June 23, 2008.

The request is **APPROVED**.

A grantable request to withdraw as attorney/agent of record must be signed by every attorney/agent seeking to withdraw or contain a clear indication that one attorney is signing on behalf of another/others. A request to withdraw will not be approved unless at least 30 (thirty) days would remain between the date of approval and the later of the expiration date of a time to file a response or the expiration date of the maximum time period which can be extended under 37 C.F.R. § 1.136(a).

The request was signed by David P. Halstead, J.D., Ph.D on behalf of all attorneys of record. All attorneys/agents have been withdrawn. Applicant is reminded that there is no attorney of record at this time.

The request to change the correspondence of record is not acceptable as the requested correspondence address is not that of: (1) the first named signing inventor; or (2) an intervening assignee of the entire interest under 37 C.F.R 3.71. All future communications from the Office will be directed to the first named signing inventor at the first copied address below until otherwise properly notified by the applicant.

There is no outstanding Office action at this time.

Telephone inquiries concerning this decision should be directed to Terri Williams at 571-272-2991.

Terri Williams
Petitions Examiner
Office of Petitions

cc: **Russell Taylor**
9 Woosehill Lane
Wokingham, Berkshire, RG41 2TT
United Kingdom

cc: **Martin G. Homer, Ph.D**
Marks and Clerk
19 Royal Exchange Square
Glasgow, G1 3AE
United Kingdom

UNITED STATES PATENT AND TRADEMARK OFFICE

UNITED STATES DEPARTMENT OF COMMERCE
United States Patent and Trademark Office
Address: COMMISSIONER FOR PATENTS
P.O. Box 1450
Alexandria, Virginia 22313-1450
www.uspto.gov

APPLICATION NUMBER	FILING OR 371(C) DATE	FIRST NAMED APPLICANT	ATTY. DOCKET NO./TITLE
11/579,455	11/19/2007	Russell Taylor	CKFW-P01-013

CONFIRMATION NO. 5545

POWER OF ATTORNEY NOTICE

28120
ROPES & GRAY LLP
PATENT DOCKETING 39/41
ONE INTERNATIONAL PLACE
BOSTON, MA 02110-2624

OC000000032235064

Date Mailed: 09/23/2008

NOTICE REGARDING CHANGE OF POWER OF ATTORNEY

This is in response to the Power of Attorney filed 06/23/2008.

- The withdrawal as attorney in this application has been accepted. Future correspondence will be mailed to the new address of record. 37 CFR 1.33.

/tswilliams/

Office of Data Management, Application Assistance Unit (571) 272-4000, or (571) 272-4200, or 1-888-786-0101

UNITED STATES PATENT AND TRADEMARK OFFICE

1 4 AUG 2008

Commissioner for Patents
United States Patent and Trademark Office
P.O. Box 1450
Alexandria, VA 22313-1450
www.uspto.gov

Hamilton, Brook, Smith & Reynolds, P.C.
530 Virginia Road
P.O. Box 9133
Concord, MA 01742-9133

In re Application of
ROSS, et al.
Application No.: 11/579,467
PCT No.: PCT/US05/16229
Int. Filing Date: 10 May 2005
Priority Date: 10 May 2004
Attorney Docket No.: 2732.1049-004
For: WHOLE GLUCAN PARTICLES IN COMBINATION WITH ANTIBIOTICS, VACCINES AND VIRAL MONOCLONAL ANTIBODIES

DECISION ON PETITION

UNDER 37 CFR 1.42

This application is before the Office of PCT Legal Administration for issues arising under 35 U.S.C. 371. The declaration filed 29 May 2007 is being treated as a request for status pursuant to 37 CFR 1.42. No petition fee is required.

BACKGROUND

On 10 May 2005, applicants filed international application PCT/US05/16229, which claimed a priority date of 10 May 2004. Pursuant to 37 CFR 1.495, the deadline for entering the U.S. National stage was set to expire on 10 November 2006.

On 03 November 2006, applicants filed a transmittal letter for entry into the national stage in the United States accompanied by the requisite basic national fee, a preliminary amendment and an Information Disclosure Statement.

On 29 May 2007, applicant filed the declaration discussed herein.

DISCUSSION

Pursuant to 37 CFR 1.42, first sentence:

"In case of the death of the inventor, the legal representative (executor, administrator, etc.) of the deceased inventor may make the necessary oath or declaration, and apply for and obtain a patent."

The declaration filed 29 May 2007 was executed by Trunetta Jo Dockter Ross as legal representative to the estate of deceased inventor Gordon D. Ross. The declaration provides the residence, post office address and country of citizenship of both the deceased inventor and the legal representative. However, the declaration does not comply with 37 CFR 1.63 (a)(2) in that the declaration signed by Ms. Ross does not list the fourth inventor Bill Kournikakis. The third page of the declaration begins with the signature line, however the inventor's name is not listed. Therefore, in order to proceed in the U.S. National stage a proper declaration executed by Ms. Ross listing all of the inventors is required.

CONCLUSION

Applicants' petition under 37 CFR 1.42 is **DISMISSED, without prejudice**.

Applicants are hereby afforded **TWO (2) MONTHS** from the mail date of this decision to file an oath or declaration in compliance with 37 CFR 1.497 (a)-(b). Any reconsideration request should include a cover letter entitled, "Renewed Petition Under 37 CFR 1.42." No additional petition fee is required. Extensions of time may be obtained under 37 CFR 1.136(a).

Any further correspondence with respect to this matter should be directed to Mail Stop PCT, Commissioner for Patents, Office of PCT Legal Administration, P.O. Box 1450, Alexandria, Virginia 22313-1450, with the contents of the letter marked to the attention of the Office of PCT Legal Administration.

Derek A. Putonen
Attorney Advisor
Office of PCT Legal Administration
Tel: (571) 272-3294
Fax: (571) 273-0459

UNITED STATES PATENT AND TRADEMARK OFFICE

Commissioner for Patents
United States Patent and Trademark Office
P.O. Box 1450
Alexandria, VA 22313-1450
www.uspto.gov

2 3 DEC 2008

HAMILTON, BROOK, SMITH & REYNOLDS, P.C.
530 VIRGINIA ROAD
P.O. BOX 9133
CONCORD MA 01742-9133

In re Application of ROSS, et al. U.S. Application No. 11/579,467 PCT No.: PCT/US05/16229 Int. Filing Date: 10 May 2005 Priority Date: 10 May 2004 Attorney Docket No.: 2732.1049-004 For: WHOLE GLUCAN PARTICLES IN COMBINATION WITH ANTIBIOTICS, VACCINES AND VIRAL MONOCLONAL ANTIBODIES	DECISION REGARDING SUBMISSION UNDER 37 CFR 1.42

In a decision mailed by this Office on 14 August 2008, the declaration filed by applicant on behalf of deceased inventor Gordon D. Ross was dismissed for failure to provide a compliant oath or declaration under 37 CFR 1.497.

On 16 October 2008, applicant filed a response to the previous decision that was accompanied by a revised declaration. The declaration submitted on 16 October 2008 identifies the deceased inventor and states the deceased inventor's country of citizenship and residence, is signed by Mrs. Trunetta Jo Dockter Ross as "Legal Representative," states his/her relationship to the deceased (i.e., Legal Representative), provides the Legal Representative's country of citizenship and residency and lists all of the joint inventors on the application. Accordingly, the declaration complies with the requirements of 37 CFR 1.497(b)(2) and 37 CFR 1.42.

The request for status under 37 CFR 1.42 is GRANTED.

The application has an international filing date of 10 May 2005 under 35 U.S.C. 363 and will be given a date of **16 October 2008** under 35 U.S.C. 371(c)(1), (c)(2) and (c)(4).

The application will be forwarded to the National Stage Processing Branch of the Office of PCT Operations for further processing in accordance with this decision.

Derek A. Putonen
Attorney-Advisor
Office of PCT Legal Administration
Tel: (571) 272-3294
Fax: (571) 273-0459

24 OCT 2008

UNITED STATES PATENT AND TRADEMARK OFFICE

Commissioner for Patents
United States Patent and Trademark Office
P.O. Box 1450
Alexandria, VA 22313-1450
www.uspto.gov

FITZPATRICK, CELLA, HARPER & SCINTO
30 ROCKEFELLER PLAZA
NEW YORK, NEW YORK 10112

In re Application of	:
MICHEL PETIT-CONIL et al.	:DECISION ON PETITION
Serial No.: 11/579,493	:
PCT No.: PCT/CA05/00674	:UNDER 37 CFR 1.181
Int. Filing Date: 03 May 2005	:
Priority Date: 03 May 2004	:
Attorney's Docket No.: GOWL-017/01US-306506-2023	:
For: METHOD FOR MECHANICAL PULP PRODUCTION	

This decision is in response to applicant's "Petition for Withdrawal of Notification of Abandonment", treated as a petition under 37 CFR 1.181, filed 13 August 2008 in the United States Patent and Trademark Office (USPTO) in the above-captioned application.

BACKGROUND

On 03 November 2006, applicant filed the U.S. national stage application for international application PCT/CA05/00674, under 35 U.S.C. 371. These papers were assigned U.S. serial number 11/579,493.

On 29 June 2007, a Notification of Missing Requirements, was mailed to applicant indicating that an oath or declaration, in compliance with 37 CFR 1.497(a) and (b), was required.

On 09 July 2008, a Notification of Abandonment was mailed to applicant indicating that applicant failed to respond to the Notification of Missing Requirements.

On 13 August 2008, applicant filed the instant petition, accompanied by a copy of the declaration and the itemized postcard receipt with USPTO date-stamp 25 June 2007, indicating receipt of a declaration executed by the inventors.

DISCUSSION

Applicant requests withdrawal of the holding of abandonment, indicating that the submission of the declaration was mailed on 25 June 2007.

As stated in section 503 of the Manual of Patent Examining Procedure, a postcard receipt which itemizes and properly identifies the items which are being filed serves as *prima facie* evidence of receipt in the USPTO of all the items listed thereon on the date stamped thereon by the USPTO.

Applicant states that a complete copy of the executed declaration was originally filed on 25 June 2007 and provides a copy of the USPTO date-stamped postcard receipt. The postcard identifies the application number and docket number. Listed on the postcard receipt is "Submission of Executed Declaration/Power". The postcard is date-stamped by the USPTO "OIPE JUN 25 2007".

A review of the USPTO date-stamped, itemized postcard receipt indicates that the declaration was deposited with the USPTO on 25 June 2007. Applicant has now presented a copy of the papers originally filed on 25 June 2007 and provided a copy of the date-stamped postcard receipt. Thus, the evidence is sufficient to establish that the declaration was received in the USPTO on 25 June 2007 and that the postcard receipt indicating a date of 25 June 2007 was mailed by the USPTO. Accordingly, the Office accepts the copy of the papers as a replacement for the missing original documents with a deposit date of 25 June 2007. The Notification of Abandonment is vacated.

A review of the declaration reveals that the declaration identifies and is executed by each inventor, and states the residency, citizenship and mailing address of each inventor. Thus, the declaration is acceptable and the requirements of 37 CFR 1.497(a) and (b).

CONCLUSION

Applicant's petition under 37 CFR 1.181 is **GRANTED**. The 09 July 2008 Notification of Abandonment is hereby **VACATED**.

The copy of the declaration originally submitted on 25 June 2007 and resubmitted on 13 August 2008 is acceptable and meets the requirements of 37 CFR 1.497(a) and (b). The surcharge of $130 will be charged to applicant's deposit account.

The application will be forwarded to the United States Designated/Elected Office (DO/EO/US) for further processing. The 35 U.S.C. 371(c)(1), (c)(2) and (c)(4) date is **25 June 2007.**

Cynthia M. Kratz
Attorney Advisor
Office of PCT Legal Administration
Telephone: (571) 272-3286
Facsimile: (571) 273-0459

UNITED STATES PATENT AND TRADEMARK OFFICE

UNITED STATES DEPARTMENT OF COMMERCE
United States Patent and Trademark Office
Address: COMMISSIONER FOR PATENTS
P.O. Box 1450
Alexandria, Virginia 22313-1450
www.uspto.gov

BACON & THOMAS, PLLC
625 SLATERS LANE
FOURTH FLOOR
ALEXANDRIA, VA 22314-1176

Mail Date: 04/21/2010

Applicant	: David A. Putnam	: DECISION ON REQUEST FOR
Patent Number	: 7659420	: RECALCULATION of PATENT
Issue Date	: 02/09/2010	: TERM ADJUSTMENT IN VIEW
Appliction No	: 11/579,501	: OF WYETH AND NOTICE OF INTENT TO
Filed	: 11/03/2006	: ISSUE CERTIFICATE OF CORRECTION
		:

The Request for Recalculation is **GRANTED** to the extent indicated.

The patent term adjustment has been determined to be **223** days. The USPTO will *sua sponte* issue a certificate of correction reflecting the amount of PTA days determined by the recalculation.

Prior to the issuance of the certificate of correction, the USPTO will afford patentee an opportunity to be heard and request reconsideration. Accordingly, patentee has **one month or thirty (30) days**, whichever is longer, to file a request for reconsideration of this patent term adjustment calculation. See 35 U.S.C. 154(b)(3)(B)(ii) and 37 CFR 1.322(a)(4). No extensions of time will be granted under 37 CFR 1.136.

Patentee should use document code PET.OP if electronically filing a request for reconsideration of this patent term adjustment calculation. The patentee must also include the information required by 37 CFR 1.705(b)(2) and the fee required by 37 CFR 1.18(e). If patentee does not file a timely request for reconsideration of this patent term adjustment calculation including the information required by 37 CFR 1.705(b)(2) and the fee required by 37 CFR 1.18(e), the USPTO will issue a certificate of correction reflecting the PTA determination noted above.

Patentee should be aware that in order to preserve the right to review in the United States District Court for the District of Columbia of the USPTO patent term adjustment determination, patentee must ensure that he or she also take the steps required under 35 U.S.C. 154(b)(4)(A) in a timely manner. Nothing in the request for recalculation should be construed as providing an alternative time frame for commencing a civil action under 35 U.S.C. 154(b)(4)(A).

Any questions concerning this decision should be directed to the Office of Patent Legal Administration at 571-272-7702.

UNITED STATES PATENT AND TRADEMARK OFFICE

UNITED STATES DEPARTMENT OF COMMERCE
United States Patent and Trademark Office
Address: COMMISSIONER FOR PATENTS
P.O. Box 1450
Alexandria, Virginia 22313-1450
www.uspto.gov

BACON & THOMAS, PLLC
625 SLATERS LANE
FOURTH FLOOR
ALEXANDRIA, VA 22314-1176

Mail Date: 05/18/2010

Applicant : David A. Putnam
Patent Number : 7659420
Issue Date : 02/09/2010
Application No : 11/579,501
Filed : 11/03/2006

: NOTICE CONCERNING IMPROPER
: CALCULATION OF PATENT TERM
: ADJUSTMENT BASED UPON USPTO
: IMPROPERLY MEASURING REDUCTION
: PERIOD UNDER 37 CFR 1.704(c)(10).

The United States Patent and Trademark Office (USPTO) discovered that in processing the recent recalculation decisions mailed in response to patentee's filed Request for Recalculation of Patent Term Adjustment in view of Wyeth, the USPTO improperly measured the reduction period for reductions under 37 CFR 1.704(c)(10). Pursuant to 37 CFR 1.704(c)(10), patentee's reduction begins on the date of filing the amendment under 37 CFR 1.312 ("1.312 amendment") or other related paper and ends on the date that the Office mails a response to the filing of the 1.312 amendment or other paper. It has been discovered that during the recalculation, the calculation failed to the limit the reduction to the mail date of the response to the 1.312 amendment or other paper. Accordingly, patentee's reductions were greater than warranted.

This notice **VACATES** the previous GRANTED request for recalculation and provides patentee with a revised GRANTED recalculation.

The patent term adjustment has been determined to be **331** days. The USPTO will *sua sponte* issue a certificate of correction reflecting the amount of patent term adjustment (PTA) days determined by the recalculation.

Prior to the issuance of the certificate of correction, the USPTO will afford patentee an opportunity to be heard and request reconsideration. Accordingly, patentee has **one month or thirty (30) days** from the mail date of this notice, whichever is longer, to file a request for reconsideration of this PTA calculation. See 35 U.S.C. § 154(b)(3)(B)(ii) and 37 CFR 1.322(a)(4).

Patentee should use document code PET.OP if electronically filing a request for reconsideration of this PTA calculation. The patentee must also include the information required by 37 CFR 1.705(b)(2), and the fee required by 37 CFR 1.18(e). If patentee does not file a timely request for reconsideration of this PTA calculation, including the information required by 37 CFR 1.705(b)(2) and the fee required by 37 CFR 1.18(e), the USPTO will issue a certificate of correction reflecting the PTA determination noted above.

Patentee should be aware that in order to preserve the right of review of the USPTO's PTA determination in the United States District Court for the District of Columbia, patentee must ensure that the steps required under 35 U.S.C. § 154 (b)(4) are taken in a timely manner. Nothing in the request for recalculation should be construed as providing an alternative time frame for commencing a civil action under 35 U.S.C. § 154(b)(4).

UNITED STATES PATENT AND TRADEMARK OFFICE

Commissioner for Patents
United States Patent and Trademark Office
P.O. Box 1450
Alexandria, VA 22313-1450
www.uspto.gov

0 9 APR 2010

34872
BASELL USA INC.
Delaware Corporate Center II
2 Righter Parkway, Suite 300
Wilmington, DE 19803

In re Application of :
RESCONI *et al* :
U.S. Application No.: 11/579,525 :
PCT No.: PCT/EP2005/004506 :
Int. Filing Date: 25 April 2005 : **DECISION**
Priority Date: 04 May 2004 :
Docket No.: FE 6176+6197 (US) :
For: PROCESS FOR THE PREPARATION :
OF ATACTIC 1-BUTENE POLYMERS :

This decision is in response to applicants' petition for a corrected filing receipt filed on 23 November 2009.

This petition is treated under 37 CFR 1.181 and hereby **DISMISSED** as follows:

Applicants request that the "Filing or 371(c) Date" noted on the filing receipt mailed 24 September 2008 be amended from 27 August 2008 to 03 November 2006. A review of the application shows that applicants entered the national stage on 03 November 2006; however, applicants did not provide an executed declaration at this time. Applicants filed an executed declaration in compliance with 37 CFR 1.497(a) and (b) on 27 August 2008, the date listed as the "Filing or 371(c) Date" on the filing receipt.

Section 1893.03(b) of the MPEP explains that the filing date of the international stage application is also the filing date for the national stage application and states, in part:

> The "Application Filing Date" field . . . was changed to "Filing or 371 (c) Date" to clearly indicate that for international applications that enter the national stage under 35 U.S.C. 371, the information displayed in this field is the date of receipt of the 35 U.S.C. 371(c)(1), (c)(2) and (c)(4) requirements. Applicants are quite often confused as to the true filing date and will ask for corrected filing receipts thinking that the information thereon is wrong. This explanation should offer some clarity. For most legal purposes, the filing date is the PCT international filing date . . .

As such, the "Filing or 371(c) Date" of "08/27/2008" recorded on the filing receipt mailed 24 September 2008 is correct. *See* 35 U.S.C. 371(c)(4). A corrected filing receipt is not warranted.

It is noted that no fee is required for this petition. The $130.00 petition fee has been credited back to Deposit Account No. 08-2336 as authorized.

This application will be forwarded to the appropriate Technology Center for examination.

James Thomson
Attorney Advisor
Office of PCT Legal Administration

Tel.: (571) 272-3302

UNITED STATES PATENT AND TRADEMARK OFFICE

2 2 JUL 2010

Commissioner for Patents
United States Patent and Trademark Office
P.O. Box 1450
Alexandria, VA 22313-1450
www.uspto.gov

34872
BASELL USA INC.
Delaware Corporate Center II
2 Righter Parkway, Suite 300
Wilmington, DE 19803

In re Application of
RESCONI *et al*
U.S. Application No.: 11/579,525
PCT No.: PCT/EP2005/004506
Int. Filing Date: 25 April 2005
Priority Date: 04 May 2004
Docket No.: FE 6176+6197 (US)
For: PROCESS FOR THE PREPARATION OF ATACTIC 1-BUTENE POLYMERS

DECISION

This decision is in response to applicants' request for reconsideration filed on 26 May 2010 which is treated under 37 CFR 1.181 and hereby **GRANTED** as follows:

A further review of the application shows that an unexecuted declaration was filed with the PCT Request on 25 April 2005 pursuant to PCT Rule 4.17(vi). The three inventors signed Box No. X of the PCT Request.[1] This is acceptable.

Accordingly, applicants are entitled to a "Filing or 371" date of 03 November 2006 on the filing receipt and a refund of the $130.00 surcharge fee.

The Form PCT/DO/EO/903 and filing receipt mailed 24 September 2008 contain erroneous information, and are both **VACATED**.

This application is being forwarded to the DO/EO/US for mailing a corrected Form PCT/DO/EO/903 and filing receipt indicating a 35 U.S.C. 371 date of 03 November 2006. The $130.00 surcharge fee has been credited back to Deposit Account No. 08-2366.

James Thomson

James Thomson
Attorney Advisor
Office of PCT Legal Administration

Tel.: (571) 272-3302

---

[1] A change in practice that started on 01 October 2005, requires each of the inventors to sign the declaration sheet if applicant files a PCT Rule 4.17(iv) declaration of inventorship for the US. *See* PCT NEWSLETTER, 09/2005 (September 2005). PCT/EP2005/004506 was filed prior to this change. As such, the declaration is acceptable.

UNITED STATES PATENT AND TRADEMARK OFFICE

Commissioner for Patents
United States Patent and Trademark Office
P.O. Box 1450
Alexandria, VA 22313-1450
www.uspto.gov

LYONDELLBASELL INDUSTRIES
3801 WEST CHESTER PIKE
NEWTOWN SQUARE PA 19073

COPY MAILED

DEC 2 2 2009

OFFICE OF PETITIONS

In re Application of	:	
David W. MATOLAK	:	
Application No. 11/579,526	:	DECISION ON PETITION
Filed: November 03, 2006	:	
Attorney Docket No. **LU 6177 (US)**	:	

This is a decision on the renewed petition under the unintentional provisions of 37 CFR 1.137(b), filed October 26, 2009, to revive the above-identified application.

The petition is **GRANTED**.

The application became abandoned for failure s to timely pay the issue and publication fees on or before September 28, 2009, as required by the Notice of Allowance and Fee(s) Due, mailed June 26, 2009, which set a statutory period for reply of three (3) months. Accordingly, the application became abandoned on September 29, 2009.

The petition satisfies the requirements of 37 CFR 1.137(b) in that petitioner has supplied (1) the reply in the form of payment of the issue fee of $1,510.00 and publication fee of $300.00, (2) the petition fee of 1,620.00; and (3) a proper statement of unintentional delay. Accordingly, the issue and publication fee payments are accepted as being unintentionally delayed.

Telephone inquiries concerning this decision should be directed to the undersigned at (571) 272-4231.

This application is being referred to Publishing Division for processing into a patent.

Michelle R. Eason
Paralegal Specialist
Office of Petitions

0 4 JAN 2008

UNITED STATES PATENT AND TRADEMARK OFFICE

Commissioner for Patents
United States Patent and Trademark Office
P.O. Box 1450
Alexandria, VA 22313-1450
www.uspto.gov

Joel S. Carter
Patent Department
Deere & Company
1 John Deere Place
Moline, IL 61265

In re Application of	:	
BAUER et al.	:	
U.S. Application No. 11/579,582	:	
PCT No.: PCT/EP05/52081	:	PETITION UNDER
Int. Filing Date: 09 May 2005	:	37 CFR 1.47(a)
Priority Date: 07 May 2004	:	
Attorney Docket No.: 09426W-US	:	
For: WASTEWATER PURIFICATION PLANT BY MEANS OF PLANTS	:	

This decision is issued in response to applicants' "Petition under 37 CFR 1.47(a)" filed 20 December 2007 to accept the application without the signature of joint-inventor, Sandra Endisch.

BACKGROUND

On 09 May 2005, applicants filed international application PCT/EP05/52081 which claimed a priority date of 07 May 2004. A copy of the international application was communicated to the United States Patent and Trademark Office from the International Bureau on 17 November 2005. Pursuant to 37 CFR 1.495, the deadline for payment of the basic national fee in the United States was to expire 30 months from the priority date, 07 November 2006.

On 06 November 2006, applicants filed a transmittal letter for entry into the national stage in the United States, which accompanied by, inter alia: the requisite basic national fee as required by 35 U.S.C. 371(c)(1) and a translation of the international application.

On 22 October 2007, the United Stated Designated/Elected Office mailed a Notification of Missing Requirements under 35 U.S.C. 371 (Form PCT/DO/EO/905) indicating that an oath or declaration in compliance with 37 CFR 1.497(a) and (b) must be filed. The notification set a two-month time limit in which to respond.

On 20 December 2007, applicants filed the present petition under 37 CFR 1.47(a).

DISCUSSION

A petition under 37 CFR 1.47(a) must be accompanied by: (1) the fee under 37 CFR 1.17, (2) factual proof that the missing joint inventor refuses to execute the application or cannot be reached after diligent effort, (3) a statement of the last known address of the missing inventor, and (4) an oath or declaration by each 37 CFR 1.47(a) applicant on his or her own behalf and behalf of the nonsigning joint inventor. Items (1), (3) and (4) have been satisfied.

As to item (2), petitioner states that Sandra Endisch cannot be found or reached after diligent effort. Section 409.03(d) of the Manual of Patent Examining Procedure (M.P.E.P.), **Proof of Unavailability or Refusal**, states, in part:

> Where inability to find or reach a nonsigning inventor "after diligent effort" is the reason for filing under 37 CFR 1.47, a statement of facts should be submitted that fully describes the exact facts which are relied on to establish that a diligent effort was made.
>
> The fact that a nonsigning inventor is on vacation or out of town and is therefore temporarily unavailable to sign the declaration is not an acceptable reason for filing under 37 CFR 1.47.
>
> The statement of facts must be signed, where at all possible, by a person having firsthand knowledge of the facts recited therein. Statements based on hearsay will not normally be accepted. Copies of documentary evidence such as internet searches, certified mail return receipts, cover letters of instructions, telegrams, that support a finding that the nonsigning inventor could not be found or reached should be made part of the statement. The steps taken to locate the whereabouts of the nonsigning inventor should be included statement of facts. It is important that the statement contain facts as opposed to conclusions.

A review of the present petition reveals that petitioner has not provided an acceptable showing that a diligent effort was made to locate the nonsigning inventor, Sandra Endisch. Petitioner states that non-signing inventor "cannot be found or reached after diligent effort." However, no documentary evidence to support the failed attempts were provided with the present petition. As stated above, copies of documentary evidence such as internet searches, certified mail return receipt, cover letter of instructions, telegrams, etc., should be supplied by a person having firsthand knowledge of the facts.

CONCLUSION

For the above reasons, the petition under 37 CFR 1.47(a) is **DISMISSED** without prejudice.

If reconsideration on the merits of this petition is desired, a proper response must be filed within **TWO (2) MONTH** from the mail date of this decision. Any reconsideration request should include a cover letter entitled "Renewed Petition Under 37 CFR 1.47(a)."

No additional petition fee is required.

Any further correspondence with respect to this matter should be addressed to: Mail Stop PCT, Commissioner for Patents, Office of PCT Legal Administration, P.O. Box 1450, Alexandria, Virginia 22313-1450, with the contents of the letter marked to the attention of the Office of PCT Legal Administration.

Anthony Smith

Anthony Smith
Attorney-Advisor
Office of PCT Legal Administration
Telephone: (571) 272-3298
Facsimile: (571) 273-0459

UNITED STATES PATENT AND TRADEMARK OFFICE

Commissioner for Patents
United States Patent and Trademark Office
P.O. Box 1450
Alexandria, VA 22313-1450
www.uspto.gov

0 9 JUN 2008

Joel S. Carter
Patent Department
Deere & Company
1 John Deere Place
Moline, IL 61265

In re Application of BAUER et al. U.S. Application No. 11/579,582 PCT No.: PCT/EP05/52081 Int. Filing Date: 09 May 2005 Priority Date: 07 May 2004 Attorney Docket No.: 09426W-US For: WASTEWATER PURIFICATION PLANT BY MEANS OF PLANTS	:	DECISION ON PETITION UNDER 37 CFR 1.47(a)

This decision is issued in response to applicants' "Second Petition under 37 CFR 1.47(a)" filed 15 Apirl 2008 to accept the application without the signature of joint-inventor, Sandra Endisch.

BACKGROUND

On 09 May 2005, applicants filed international application PCT/EP05/52081 which claimed a priority date of 07 May 2004. A copy of the international application was communicated to the United States Patent and Trademark Office from the International Bureau on 17 November 2005. Pursuant to 37 CFR 1.495, the deadline for payment of the basic national fee in the United States was to expire 30 months from the priority date, 07 November 2006.

On 06 November 2006, applicants filed a transmittal letter for entry into the national stage in the United States, which accompanied by, inter alia: the requisite basic national fee as required by 35 U.S.C. 371(c)(1) and a translation of the international application.

On 22 October 2007, the United Stated Designated/Elected Office mailed a Notification of Missing Requirements under 35 U.S.C. 371 (Form PCT/DO/EO/905) indicating that an oath or declaration in compliance with 37 CFR 1.497(a) and (b) must be filed. The notification set a two-month time limit in which to respond.

On 20 December 2007, applicants filed a petition under 37 CFR 1.47(a). In a decision dated 04 January 2008, applicants' petition under 37 CFR 1.47(a) was dismissed without prejudice.

On 15 April 2008, applicants filed the present renewed petition under 37 CFR 1.47(a).

DISCUSSION

A petition under 37 CFR 1.47(a) must be accompanied by: (1) the fee under 37 CFR 1.17, (2) factual proof that the missing joint inventor refuses to execute the application or cannot be reached after diligent effort, (3) a statement of the last known address of the missing inventor, and (4) an oath or declaration by each 37 CFR 1.47(a) applicant on his or her own behalf and behalf of the nonsigning joint inventor. Items (1), (3) and (4) have been satisfied.

As to item (2), petitioner states that Sandra Endisch cannot be found or reached after diligent effort. Section 409.03(d) of the Manual of Patent Examining Procedure (M.P.E.P.), **Proof of Unavailability or Refusal**, states, in part:

> Where inability to find or reach a nonsigning inventor "after diligent effort" is the reason for filing under 37 CFR 1.47, a statement of facts should be submitted that fully describes the exact facts which are relied on to establish that a diligent effort was made.
>
> The fact that a nonsigning inventor is on vacation or out of town and is therefore temporarily unavailable to sign the declaration is not an acceptable reason for filing under 37 CFR 1.47.
>
> The statement of facts must be signed, where at all possible, by a person having firsthand knowledge of the facts recited therein. Statements based on hearsay will not normally be accepted. Copies of documentary evidence such as internet searches, certified mail return receipts, cover letters of instructions, telegrams, that support a finding that the nonsigning inventor could not be found or reached should be made part of the statement. The steps taken to locate the whereabouts of the nonsigning inventor should be included statement of facts. It is important that the statement contain facts as opposed to conclusions.

A review of the present petition reveals that applicants have not provided an acceptable showing that a diligent effort was made to reach the nonsigning inventor, Sandra Endisch. The Declaration of Gabriele Hoerrmann states that "the formal papers have sent to the address of Mrs. Sandra Endisch, which has been returned through German Post Office." Petitioner has provided a copy of the envelope addressed to Sandra Endisch, however, the envelope is illegible and has not been translated. Additionally, were any other attempts made to locate Sandra Endisch? The single mailing of the papers to the nonsigning inventor's last known address does not constitute a "diligent" effort to locate the inventor. Applicant must show that alternative means were employed, such as a search of telephone and/or Internet directories, in an attempt to locate Sandra Endisch.

CONCLUSION

For the above reasons, the petition under 37 CFR 1.47(a) is **DISMISSED** without prejudice.

If reconsideration on the merits of this petition is desired, a proper response must be filed within **TWO (2) MONTH** from the mail date of this decision. Any reconsideration request should include a cover letter entitled "Renewed Petition Under 37 CFR 1.47(a)." No additional petition fee is required.

Any further correspondence with respect to this matter should be addressed to: Mail Stop PCT, Commissioner for Patents, Office of PCT Legal Administration, P.O. Box 1450, Alexandria, Virginia 22313-1450, with the contents of the letter marked to the attention of the Office of PCT Legal Administration.

Anthony Smith
Attorney-Advisor
Office of PCT Legal Administration
Telephone: (571) 272-3298
Facsimile: (571) 273-0459

1 6 SEP 2008

UNITED STATES PATENT AND TRADEMARK OFFICE

Commissioner for Patents
United States Patent and Trademark Office
P.O. Box 1450
Alexandria, VA 22313-1450
www.uspto.gov

Joel S. Carter
Patent Department
Deere & Company
1 John Deere Place
Moline, IL 61265

In re Application of	:	
BAUER et al.	:	
U.S. Application No. 11/579,582	:	DECISION ON
PCT No.: PCT/EP05/52081	:	PETITION UNDER
Int. Filing Date: 09 May 2005	:	37 CFR 1.47(a)
Priority Date: 07 May 2004	:	
Attorney Docket No.: 09426W-US	:	
For: WASTEWATER PURIFICATION PLANT BY MEANS OF PLANTS	:	

This decision is in response to applicants' "Third Petition under 37 CFR 1.47(a)" filed 24 July 2008. In a decision dated 09 June 2008, the "Second Petition under 37 CFR 1.47(a)" filed 15 April 2008 was dismissed because applicant did not provide adequate proof that the missing inventor, Sandra Endisch, refused to execute the application or could not be reached after diligent effort. The procedural background for this application was set forth in detail in the decision mailed by this Office on 15 April 2008.

DISCUSSION

A petition under 37 CFR 1.47(a) must be accompanied by: (1) the fee under 37 CFR 1.17, (2) factual proof that the missing joint inventor refuses to execute the application or cannot be reached after diligent effort, (3) a statement of the last known address of the missing inventor, and (4) an oath or declaration by each 37 CFR 1.47(a) applicant on his or her own behalf and behalf of the nonsigning joint inventor. Items (1), (3) and (4) have been satisfied.

Regarding item (2), the petition asserts that the nonsigning inventor cannot be reached or located after diligent effort. In support of this assertion, applicants have submitted statements from Gabriele Hoerrmann, with supporting documents, describing efforts made to locate the nonsigning inventor, including numerous online searches. These materials provide an acceptable showing that the nonsigning inventor cannot be reached or located after diligent effort. Item (2) is therefore satisfied.

CONCLUSION

The renewed petition under 37 CFR 1.47(a) is **GRANTED**.

The application will be given an international filing date of 09 May 2005 under 35 U.S.C. 363, and a date of **20 December 2007** under 35 U.S.C. 371(c).

As provided in 37 CFR 1.47(a), a notice of the filing of this application will be forwarded to the nonsigning inventor at his last known address of record.

A notice of the filing of the application under 37 CFR 1.47(a) will be published in the Official Gazette.

This application is being returned to the United States Designated/Elected Office for processing in accordance with this decision.

Anthony Smith
Attorney-Advisor
Office of PCT Legal Administration
Telephone: (571) 272-3298
Facsimile: (571) 273-0459

UNITED STATES PATENT AND TRADEMARK OFFICE

Commissioner for Patents
United States Patent and Trademark Office
P.O. Box 1450
Alexandria, VA 22313-1450
www.uspto.gov

16 SEP 2008

Sandra Endisch
Friesenheimerstr. 14
68165 Mannheim
Germany

In re Application of
BAUER et al.
U.S. Application No. 11/579,582
PCT No.: PCT/EP05/52081
Int. Filing Date: 09 May 2005
Priority Date: 07 May 2004
Attorney Docket No.: 09426W-US
For: WASTEWATER PURIFICATION PLANT BY MEANS OF PLANTS

Dear Sandra Endisch:

You are named as an inventor in the above identified United States patent application, filed under the provisions of 37 CFR 1.47(a) and 35 U.S.C. 116. Should a patent be granted, you will be designated as an inventor.

As a named inventor, you are entitled to inspect any paper in the file wrapper of the application, order copies of all or any part thereof (at a prepaid cost per 37 CFR 1.19) or to make your position of record in the application. Alternatively, you may arrange to do any of the preceding through a registered patent agent or attorney presenting written authorization from you. If you care to join in the application, counsel of record (see below) would presumably assist you. Joining in the application would entail the filing of an appropriate oath or declaration by you pursuant to 37 CFR 1.63.

Anthony Smith
Attorney-Advisor
Office of PCT Legal Administration
Telephone: (571) 272-3298

Counsel of Record:
Joel S. Carter
Patent Department
Deere & Company
1 John Deere Place
Moline, IL 61265

SPE RESPONSE FOR CERTIFICATE OF CORRECTION

Paper No.: _____

DATE : 5/7/10

TO SPE OF : ART UNIT 3654 (3700)

SUBJECT : Request for Certificate of Correction for Appl. No.: 11/579,584 Patent No.: 7,618,004

Please respond to this request for a certificate of correction within 7 days.

FOR IFW FILES:

Please review the requested changes/corrections as shown in the **COCIN** document(s) in the IFW application image. No new matter should be introduced, nor should the scope or meaning of the claims be changed.

Please complete the response (see below) and forward the completed response to scanning using document code **COCX**.

FOR PAPER FILES:

Please review the requested changes/corrections as shown in the attached certificate of correction. Please complete this form (see below) and forward it with the file to:

Certificates of Correction Branch (CofC)
Randolph Square – 9D10-A
Palm Location 7580

Ernest C. White, LTE
Randolph Sq. Ste 9D62A
703-756-1590

Thank You For Your Assistance

The request for issuing the above-identified correction(s) is hereby:
Note your decision on the appropriate box.

☒ **Approved**	**All** changes apply.
☐ **Approved in Part**	Specify below which changes **do not** apply.
☐ **Denied**	State the reasons for denial below.

_____

_____

_____

SPE [signature] **ART UNIT** 3654

UNITED STATES PATENT AND TRADEMARK OFFICE

UNITED STATES DEPARTMENT OF COMMERCE
United States Patent and Trademark Office
Address: COMMISSIONER FOR PATENTS
P.O. Box 1450
Alexandria, Virginia 22313-1450
www.uspto.gov

BACON & THOMAS, PLLC
625 SLATERS LANE
FOURTH FLOOR
ALEXANDRIA, VA 22314-1176

Mail Date: 08/02/2010

Applicant	: Stefan Konrad	: DECISION ON REQUEST FOR
Patent Number	: 7649489	: RECALCULATION of PATENT
Issue Date	: 01/19/2010	: TERM ADJUSTMENT IN VIEW
Application No	: 11/579,588	: OF WYETH AND NOTICE OF INTENT TO
Filed	: 12/31/2007	: ISSUE CERTIFICATE OF CORRECTION
		:

The Request for Recalculation is **GRANTED** to the extent indicated.

The patent term adjustment has been determined to be **42** days. The USPTO will *sua sponte* issue a certificate of correction reflecting the amount of PTA days determined by the recalculation.

Prior to the issuance of the certificate of correction, the USPTO will afford patentee an opportunity to be heard and request reconsideration. Accordingly, patentee has **one month or thirty (30) days**, whichever is longer, to file a request for reconsideration of this patent term adjustment calculation. See 35 U.S.C. 154(b)(3)(B)(ii) and 37 CFR 1.322(a)(4). No extensions of time will be granted under 37 CFR 1.136.

Patentee should use document code PET.OP if electronically filing a request for reconsideration of this patent term adjustment calculation. The patentee must also include the information required by 37 CFR 1.705(b)(2) and the fee required by 37 CFR 1.18(e). If patentee does not file a timely request for reconsideration of this patent term adjustment calculation including the information required by 37 CFR 1.705(b)(2) and the fee required by 37 CFR 1.18(e), the USPTO will issue a certificate of correction reflecting the PTA determination noted above.

Patentee should be aware that in order to preserve the right to review in the United States District Court for the District of Columbia of the USPTO patent term adjustment determination, patentee must ensure that he or she also take the steps required under 35 U.S.C. 154(b)(4)(A) in a timely manner. Nothing in the request for recalculation should be construed as providing an alternative time frame for commencing a civil action under 35 U.S.C. 154(b)(4)(A).

Any questions concerning this decision should be directed to the Office of Patent Legal Administration at 571-272-7702.

UNITED STATES PATENT AND TRADEMARK OFFICE

UNITED STATES DEPARTMENT OF COMMERCE
United States Patent and Trademark Office
Address: COMMISSIONER FOR PATENTS
P.O. Box 1450
Alexandria, Virginia 22313-1450
www.uspto.gov

DICKSTEIN SHAPIRO LLP
1825 EYE STREET NW
Washington, DC 20006-5403

Mail Date: 06/09/2010

Applicant	: Gualtiero Barezzani	: DECISION ON REQUEST FOR
Patent Number	: 7628220	: RECALCULATION of PATENT
Issue Date	: 12/08/2009	: TERM ADJUSTMENT IN VIEW
Application No	: 11/579,609	: OF WYETH AND NOTICE OF INTENT TO
Filed	: 07/03/2007	: ISSUE CERTIFICATE OF CORRECTION
		:

The Request for Recalculation is **GRANTED** to the extent indicated.

The patent term adjustment has been determined to be **172** days. The USPTO will *sua sponte* issue a certificate of correction reflecting the amount of PTA days determined by the recalculation.

Prior to the issuance of the certificate of correction, the USPTO will afford patentee an opportunity to be heard and request reconsideration. Accordingly, patentee has **one month or thirty (30) days**, whichever is longer, to file a request for reconsideration of this patent term adjustment calculation. See 35 U.S.C. 154(b)(3)(B)(ii) and 37 CFR 1.322(a)(4). No extensions of time will be granted under 37 CFR 1.136.

Patentee should use document code PET.OP if electronically filing a request for reconsideration of this patent term adjustment calculation. The patentee must also include the information required by 37 CFR 1.705(b)(2) and the fee required by 37 CFR 1.18(e). If patentee does not file a timely request for reconsideration of this patent term adjustment calculation including the information required by 37 CFR 1.705(b)(2) and the fee required by 37 CFR 1.18(e), the USPTO will issue a certificate of correction reflecting the PTA determination noted above.

Patentee should be aware that in order to preserve the right to review in the United States District Court for the District of Columbia of the USPTO patent term adjustment determination, patentee must ensure that he or she also take the steps required under 35 U.S.C. 154(b)(4)(A) in a timely manner. Nothing in the request for recalculation should be construed as providing an alternative time frame for commencing a civil action under 35 U.S.C. 154(b)(4)(A).

Any questions concerning this decision should be directed to the Office of Patent Legal Administration at 571-272-7702.

Commissioner for Patents
United States Patent and Trademark Office
P.O. Box 1450
Alexandria, VA 22313-1450
www.uspto.gov

CST

SEP 17 2008

In re application of	:	DECISION ON REQUEST TO
Fumihisa Kitawaki et al	:	PARTICIPATE IN PATENT
Serial No. 11/579,638	:	PROSECUTION HIGHWAY
Filed: November 6, 2006	:	PILOT PROGRAM AND
For: SENSOR, MEASURING DEVICE,	:	PETITION TO MAKE SPECIAL
AND MEASURING METHOD	:	UNDER 37 CFR 1.102(d)

This is a decision on the request to participate in the Patent Prosecution Highway (PPH) program and the petition under 37 CFR 1.102(d) to make the above-identified application special, filed August 27, 2008.

The request and petition are **DISMISSED**.

A grantable request to participate in the PPH pilot program and petition to make special require:

(1) The U.S. application must validly claim priority under 35 U.S.C. 119(a) to one or more applications filed in the JPO, note where the JPO application with similar claims is not the same application from which the U.S. application claims priority that the applicant must identify the relationship between the JPO application with similar claims and the JPO priority application;

(2) Applicant must submit a copy of:
   a. The allowable/patentable claim(s) from the JPO application(s) or if a copy of the allowable/patentable claims is available via the Dossier Access System (DAS) applicant may request the USPTO to obtain a copy from DAS; however, if the USPTO is unable to obtain a copy from the DAS, the applicant will be required to submit a copy;
   b. An English translation of the allowable/ patentable claim(s), if applicable; and
   c. A statement that the English translation is accurate, if applicable;

(3) Applicant must:
   a. Ensure all the claims in the U.S. application must sufficiently correspond or be amended to sufficiently correspond to the allowable/patentable claim(s) in the JPO application(s); and
   b. Submit a claims correspondence table in English;

(4) Examination of the U.S. application has not begun;

(5) Applicant must submit:
a. Documentation of prior office action:
i. a copy of the office action(s) just prior to the "Decision to Grant a Patent" from each of the JPO application(s) containing the allowable/patentable claims(s) or
ii. if the allowable/patentable claim(s) are from "Notification of Reasons for Refusal" then the Notification of Reasons for Refusal or
iii. if the JPO application is a first action allowance then no office action from the JPO is necessary should be indicated on the request/petition form:
Further, if a copy of the documents from a or b is available via the Dossier Access System (DAS), applicant may request the USPO obtain a copy from the DAS; however, if the USPTO is unable to obtain a copy of the DAS, the applicant will be required to submit a copy;
b. An English language translation of the JPO Office action from (5)(a)(i)-(ii) above if applicable; and
c. A statement that the English translation is accurate;

(6) Applicant must submit:
a. An IDS listing the documents cited by the JPO examiner in the JPO office action (unless already submitted in this application)
b. Copies of documents except U.S. patents or U.S. patent application publications (unless already submitted in this application); and

(7) The required petition fee under 37 CFR 1.17(h).

The request to participate in the PPH pilot program and petition fail because:

(3) All of the claims in the U.S. application must sufficiently correspond or be amended to sufficiently correspond to the allowable/patentable claim(s) in the JPO application(s).

Specifically, independent claims 12 and 15 do not include the limitation that the sample includes a first analyte comprising an antigen or that the reagent comprises an antibody as required in corresponding claims 1 and 4 of the JPO application.

Applicant is given a time period of **ONE MONTH OR THIRTY DAYS**, whichever is longer, from the mailing date of this decision to correct the deficiencies. **NO EXTENSION OF TIME UNDER 37 CFR 1.136 IS PERMITTED.** If the deficiencies are not corrected within the time period given, the application with await action in its regular turn.

Any inquiry regarding this decision should be directed to Christine Tierney, Quality Assurance Specialist, at (571) 272-1055.

All other inquiries concerning the examination or status of the application is accessible in the PAIR system at http://www.uspto.gov/ebc/index.html.

/Christine Tierney/

Christine Tierney
Quality Assurance Specialist
Technology Center 1700

Commissioner for Patents
United States Patent and Trademark Office
P.O. Box 1450
Alexandria, VA 22313-1450
www.uspto.gov

CST

DEC 3 2008

In re application of	:	DECISION ON REQUEST TO
Fumihisa Kitawaki et al	:	PARTICIPATE IN PATENT
Serial No. 11/579,638	:	PROSECUTION HIGHWAY
Filed: November 6, 2006	:	PILOT PROGRAM AND
For: SENSOR, MEASURING DEVICE,	:	PETITION TO MAKE SPECIAL
AND MEASURING METHOD	:	UNDER 37 CFR 1.102(d)

This is a decision on the supplemental request to participate in the Patent Prosecution Highway (PPH) program filed September 30, 2008.

The request and petition are **GRANTED**.

A grantable request to participate in the PPH program and petition to make special require:

(1) The U.S. application must validly claim priority under 35 U.S.C. 119(a) to one or more applications filed in the JPO, note where the JPO application with similar claims is not the same application from which the U.S. application claims priority that the applicant must identify the relationship between the JPO application with similar claims and the JPO priority application;

(2) Applicant must submit a copy of:
   a. The allowable/patentable claim(s) from the JPO application(s) or if a copy of the allowable/patentable claims is available via the Dossier Access System (DAS) applicant may request the USPTO to obtain a copy from DAS; however, if the USPTO is unable to obtain a copy from the DAS, the applicant will be required to submit a copy;
   b. An English translation of the allowable/ patentable claim(s), if applicable; and
   c. A statement that the English translation is accurate, if applicable;

(3) Applicant must:
   a. Ensure all the claims in the U.S. application must sufficiently correspond or be amended to sufficiently correspond to the allowable/patentable claim(s) in the JPO application(s); and
   b. Submit a claims correspondence table in English;

(4) Examination of the U.S. application has not begun;

(5) Applicant must submit:

a. Documentation of prior office action:
   i. a copy of the office action(s) just prior to the "Decision to Grant a Patent" from each of the JPO application(s) containing the allowable/patentable claims(s) or
   ii. if the allowable/patentable claim(s) are from "Notification of Reasons for Refusal" then the Notification of Reasons for Refusal or
   iii. if the JPO application is a first action allowance then no office action from the JPO is necessary should be indicated on the request/petition form:

   Further, if a copy of the documents from a or b is available via the Dossier Access System (DAS), applicant may request the USPO obtain a copy from the DAS; however, if the USPTO is unable to obtain a copy of the DAS, the applicant will be required to submit a copy;
b. An English language translation of the JPO Office action from (5)(a)(i)-(ii) above if applicable; and
c. A statement that the English translation is accurate;

(6) Applicant must submit:

a. An IDS listing the documents cited by the JPO examiner in the JPO office action (unless already submitted in this application)
b. Copies of documents except U.S. patents or U.S. patent application publications (unless already submitted in this application); and

(7) The required petition fee under 37 CFR 1.17(h).

The request to participate in the PPH program and petition comply with the above requirements. Accordingly, the above-identified application has been accorded "special" status.

The application is being forwarded to the examiner for action on the merits commensurate with this decision.

Any inquiry regarding this decision should be directed to Christine Tierney, Quality Assurance Specialist, at (571) 272-1055.

All other inquiries concerning the examination or status of the application is accessible in the PAIR system at http://www.uspto.gov/ebc/index.html.

/Christine Tierney/

Christine Tierney
Quality Assurance Specialist
Technology Center 1700

UNITED STATES PATENT AND TRADEMARK OFFICE

Commissioner for Patents
United States Patent and Trademark Office
P.O. Box 1450
Alexandria, VA 22313-1450
www.uspto.gov

STERNE, KESSLER, GOLDSTEIN
& FOX P.L.L.C.
1100 NEW YORK AVENUE, N.W.
WASHINGTON DC 20005

COPY MAILED

DEC 2 2 2009

OFFICE OF PETITIONS

In re Application of	:	
Dean WRIGHT et al.	:	
Application No. 11/579,663	:	DECISION ON PETITION
Filed: November 07, 2006	:	
Attorney Docket No. **2471.0030000**	:	

This is a decision on the renewed petition under the unintentional provisions of 37 CFR 1.137(b), filed October 26, 2009, to revive the above-identified application.

The petition is **GRANTED**.

The application became abandoned for failure to reply in a timely manner to the non-final Office action mailed, December 12, 2008 which set a shortened statutory period for reply of three (3) month. No extensions of time under the provisions of 37 CFR 1.136(a) were obtained. Accordingly, the application became abandoned on March 13, 2009.

The petition satisfies the requirements of 37 CFR 1.137(b) in that petitioner has supplied (1) the reply in the form of an amendment; (2) the petition fee of $1,620.00; and (3) a proper statement of unintentional delay. Accordingly, the reply to the non-final Office action of December 12, 2008 is accepted as having been unintentionally delayed.

Telephone inquiries concerning this decision should be directed to the undersigned at (571) 272- 4231.

The application file is being referred to Technology Center AU 3714 for appropriate action on the concurrently filed amendment.

Michelle R. Eason
Paralegal Specialist
Office of Petitions

0 8 MAY 2008

UNITED STATES PATENT AND TRADEMARK OFFICE

Commissioner for Patents
United States Patent and Trademark Office
P.O. Box 1450
Alexandria, VA 22313-1450
www.uspto.gov

Alan Miller
Amster, Rothstein & Ebenstein LLP
90 Park Avenue
New York, NY 10016

In re Application of	:	
Rogler, et al.	:	
Serial No.: 11/579,667	:	DECISION ON
PCT No.: PCT/US2005/017899	:	REQUEST
Int. Filing Date: 23 May 2005	:	FOR REFUND
Priority Date: 24 May 2004	:	
Attorney's Docket No.: 96700/1181	:	
For: RNA EXPRESSION MICROARRAYS	:	

This decision is responsive to the "REQUEST FOR REFUND" filed 24 March 2008.

BACKGROUND

On 23 May 2005, applicants filed international application PCT/US2005/017899, which claimed priority of an earlier United States provisional application which was filed 24 May 2004. A copy of the international application was received by the United States Patent and Trademark Office from the International Bureau on 08 December 2005. Accordingly, the thirty-month period for paying the basic national fee for the national stage in the United States expired at midnight on 24 November 2006.

On 11 November 2006, applicants filed a transmittal letter for entry into the national stage in the United States. The transmittal letter was accompanied by, *inter alia*, a copy of the application, basic national fee, search fee and examination fee. These papers were assigned U.S. Serial No. 11/579,667.

On 13 February 2008, the United States Patent and Trademark Office in its capacity as an Elected Office mailed out a "NOTIFICATION OF MISSING REQUIREMENTS UNDER 35 U.S.C. 371 IN THE UNITED STATES DESIGNATED/ELECTED OFFICE (DO/EO/US)" (Form PCT/DO/EO/905) indicating that the search fee had been adjusted since applicant had not provided a copy of the International Search Report (Form PCT/ISA/210). As a result, applicant's search fee was increased to $250.

On 12 March 2008, applicant filed the current request.

DISCUSSION

37 CFR 1.492(b)(2), states:

> (b)Search fee for an international application entering the national stage under 35 U.S.C. 371 if the basic national fee was not paid before December 8, 2004:
>
> (2)If the search fee as set forth in § 1.445(a)(2) has been paid on the international application to the United States Patent and Trademark Office as an International Searching Authority:
>
> By a small entity (§ 1.27(a)) $50.00
>
> By other than a small entity. . . . $100.00

On filing of the present application, applicant included the basic national fee of $150, the search fee of $50, and the examination fee of $100. Further, on filing, applicant indicated small entity status. Although applicants paid the search fee on the international application to the United States Patent and Trademark Office as the International Searching Authority, applicant's search fee was increased to $250. This increase was in error, since the correct search fee is $50.

CONCLUSION

The request for refund is **GRANTED**.

Applicant's **deposit account #01-1785** has been **credited** **$250**, and charged **$50** for the search fee.

This application is being forwarded to the national stage office for processing in accordance with this decision.

Debra Brittingham
PCT Special Programs Examiner
Office of PCT Legal Administration

Richard Cole
PCT Legal Examiner
Office of PCT Legal Administration

Tel: (571) 272-3280
Fax: (571) 273-0459

UNITED STATES PATENT AND TRADEMARK OFFICE

COMMISSIONER FOR PATENTS
UNITED STATES PATENT AND TRADEMARK OFFICE
P.O. BOX 1450
ALEXANDRIA, VA 22313-1450
www.uspto.gov

13 FEB 2008

BLACK, LOWE & GRAHAM PLLC
701 FIFTH AVENUE, STE. 4800
SEATTLE, WA 98104

In re Application of	:	
ORLITZKY et al	:	
Application No.: 11/579,668	:	DECISION ON PETITION
371 Filing Date: November 6, 2006	:	UNDER 37 CFR 1.78
Attorney Docket No.: SMAR-5-1000	:	

This is a decision on the petition under 37 CFR 1.78(a)(6), filed October 19, 2007, to accept an unintentionally delayed claim under 35 U.S.C. 119(e) for the benefit of the prior-filed application set forth in the concurrently filed amendment.

The petition is **GRANTED**.

The present nonprovisional application was filed after November 29, 2000, and the claim herein for the benefit of priority to the prior-filed provisional application is submitted after expiration of the period specified in 1.78(a)(5)(ii). Therefore, this is a proper petition under 37 CFR 1.78(a)(6).

A petition for acceptance of a late claim for priority under 1.78(a)(6) is only applicable to those applications filed on or after November 29, 2000. Further, the petition is appropriate only after the expiration of the period specified in 37 CFR 1.78(a)(5)(ii). In addition, the petition under 37 CFR 1.78(a)(6) must be accompanied by:

(1) the reference required by 35 U.S.C. 119(e) and 37 CFR 1.78(a)(5)(i) of the prior-filed application, unless previously submitted;
(2) the surcharge set forth in 37 CFR 1.17(t); and
(3) a statement that the entire delay between the date the claim was due under 37 CFR 1.78(a)(5)(ii) and the date the claim was filed was unintentional. The Director may require additional where there is a question whether the delay was unintentional.

The petition complies with the requirements for a grantable petition under 37 CFR 1.78(a)(6) in that (1) a reference to the prior-filed application has been included in an amendment to the first sentence of the specification following the title as provided by 37 CFR 1.78(a)(5)(iii); (2) the surcharge fee required by 37 CFR 1.17(t) has been submitted; and (3) the petition contains a proper statement of unintentional delay. Accordingly, having found that the petition for acceptance of an

unintentionally delayed claim for the benefit of priority under 35 U.S.C. 119(e) to the prior-filed applications satisfies the conditions of 37 CFR 1.78(a)(6), the petition is granted.

The granting of the petition to accept the delayed benefit claim to the prior-filed application under 37 CFR 1.78(a)(6) should not be construed as meaning that this application is entitled to the benefit of the filing date of the prior-filed application. In order for this application to be entitled to the benefit of the prior-filed application, all other requirements under 35 U.S.C. 119(e) and 37 CFR 1.78(a)(4) and (a)(5) must be met. Similarly, the fact that any Filing Receipt includes the prior-filed application should not be construed as meaning that applicant is entitled to the claim for benefit of priority to the prior-filed application noted thereon. Accordingly, the examiner will, in due course, consider this benefit claim and determine whether this application is entitled to the benefit of the earlier filing date.

Any questions concerning this matter may be directed to Bryan Lin at (571) 272-3303.

This application is being forwarded to the United States Designated/Elected Office (DO/EO/US) for continued processing. The DO/EO/US shall include the priority claim to U.S. Provisional Application Number 60/568,267, filed May 6, 2004, on any future issued Filing Receipt.

Bryan Lin
PCT Legal Examiner
Office of PCT Legal Administration

Boris Milef
PCT Legal Examiner
Office of PCT Legal Administration

UNITED STATES PATENT AND TRADEMARK OFFICE

Commissioner for Patents
United States Patent and Trademark Office
P.O. Box 1450
Alexandria, VA 22313-1450
www.uspto.gov

NXP, B.V.
NXP INTELLECTUAL PROPERTY DEPARTMENT
M/S41-SJ
1109 MCKAY DRIVE
SAN JOSE CA 95131

COPY MAILED

MAY 26 2009

OFFICE OF PETITIONS

ON PETITION

In re Application of	:
Den Dekker et al.	:
Application No. 11/579,679	:
Filed: November 6, 2006	:
Attorney Docket No. NL040480US1	:

This is a decision on the petition under 37 C.F.R. § 1.137(b), filed March 9, 2009, to revive the above-identified application.

The petition is **GRANTED**.

The petition satisfies the requirements of 37 CFR 1.137(b) in that petitioner has supplied (1) the reply in the form of a Request for Continued Examination (RCE), (2) the petition fee, and (3) a proper statement of unintentional delay.

Telephone inquiries concerning this decision should be directed to the undersigned at (571) 272-3206.

This matter is being referred to Technology Center AU 2891 for further processing of the Request for Continued Examination under 37 CFR 1.114 filed concurrently with the instant petition.

Liana Walsh
Petitions Examiner
Office of Petitions

UNITED STATES PATENT AND TRADEMARK OFFICE

UNITED STATES DEPARTMENT OF COMMERCE
United States Patent and Trademark Office
Address: COMMISSIONER FOR PATENTS
P.O. Box 1450
Alexandria, Virginia 22313-1450
www.uspto.gov

COLLARD & ROE, P.C.
1077 NORTHERN BOULEVARD
ROSLYN, NY 11576

Mail Date: 04/21/2010

Applicant	: Stefan Munding	: DECISION ON REQUEST FOR
Patent Number	: 7645418	: RECALCULATION of PATENT
Issue Date	: 01/12/2010	: TERM ADJUSTMENT IN VIEW
Appliction No	: 11/579,706	: OF WYETH AND NOTICE OF INTENT TO
Filed	: 11/29/2006	: ISSUE CERTIFICATE OF CORRECTION
		:

The Request for Recalculation is **GRANTED** to the extent indicated.

The patent term adjustment has been determined to be **451** days. The USPTO will *sua sponte* issue a certificate of correction reflecting the amount of PTA days determined by the recalculation.

Prior to the issuance of the certificate of correction, the USPTO will afford patentee an opportunity to be heard and request reconsideration. Accordingly, patentee has **one month or thirty (30) days**, whichever is longer, to file a request for reconsideration of this patent term adjustment calculation. See 35 U.S.C. 154(b)(3)(B)(ii) and 37 CFR 1.322(a)(4). No extensions of time will be granted under 37 CFR 1.136.

Patentee should use document code PET.OP if electronically filing a request for reconsideration of this patent term adjustment calculation. The patentee must also include the information required by 37 CFR 1.705(b)(2) and the fee required by 37 CFR 1.18(e). If patentee does not file a timely request for reconsideration of this patent term adjustment calculation including the information required by 37 CFR 1.705(b)(2) and the fee required by 37 CFR 1.18(e), the USPTO will issue a certificate of correction reflecting the PTA determination noted above.

Patentee should be aware that in order to preserve the right to review in the United States District Court for the District of Columbia of the USPTO patent term adjustment determination, patentee must ensure that he or she also take the steps required under 35 U.S.C. 154(b)(4)(A) in a timely manner. Nothing in the request for recalculation should be construed as providing an alternative time frame for commencing a civil action under 35 U.S.C. 154(b)(4)(A).

Any questions concerning this decision should be directed to the Office of Patent Legal Administration at 571-272-7702.

07 DEC 2006

UNITED STATES PATENT AND TRADEMARK OFFICE

COMMISSIONER FOR PATENTS
UNITED STATES PATENT AND TRADEMARK OFFICE
P.O. BOX 1450
ALEXANDRIA, VA 22313-1450
www.uspto.gov

Annette S. Parent
Townsend and Townsend and Crew LLP
Two Embarcadero Center 8th Floor
San Francisco, CA 94111

In re Application of:	:	
Richard Daifuku et al.	:	
Application No.: 11/579, 751	:	DECISION ON PETITION
PCT Application No.: PCT/US04/41555	:	UNDER 37 CFR 1.137(b)
Int. Filing Date: 10 December 2004	:	
Priority Date Claimed: 19 December 2003		
Attorney Docket No.: 021227-000510US		
For: Mutagenic Heterocycles.		

This is in response to Applicants' "Petition for Revival of an International Application for Patent Designating the U.S. Abandoned Unintentionally under 37 CFR 1.137(b)" filed 07 November 2006.

BACKGROUND

On 10 December 2004, Applicants filed international application PCT/US04/41555, which claimed a priority of an earlier application from the United States filed on 19 December 2003. The thirty-month period for paying the basic national fee in the United States expired at midnight on 19 June 2006.

International application PCT/US04/41555 became abandoned as to the United States for failure to timely pay the basic national fee.

On 07 November 2006, applicants filed the present petition under 37 CFR 1.137(b).

DISCUSSION

A petition to revive an abandoned application under 37 CFR 1.137(b) must be filed without intentional delay from the time the application became abandoned and/or

applicant first became aware of the abandoned status of the application. A petition under 37 CFR 1.137(b) must be accompanied by (1) the required reply, (2) the petition as set forth in 37 CFR 1.17(m), (3) a statement that the entire delay in filing the required reply from the due date for the reply until the filing of a grantable petition was unintentional, and (4) a terminal disclaimer and fee (if the international application was filed prior to June 8, 1995).

With regard to Item (1), applicants have provided the required reply under 35 U.S.C. 371. A copy of the international application and the basic national fee has been filed in the United States Receiving Office (RO/US).

With regard to Item (2), the appropriate petition fee of $750 as required by 37 CFR 1.17(m) has been paid.

With regard to Item (3), Applicants' statement that "[t]he entire delay in filing the required reply from the due date for the required reply until the filing of a grantable petition under 37 CFR 1.137(b) was unintentional" has been satisfied.

With regard to Item (4), a terminal disclaimer is not required since this application was filed after 08 June 1995.

A review of the application file reveals that applicants have satisfied the requirements of 37 CFR 1.137(b). However, the oath or declaration is not yet filed in the United States Receiving Office (RO/US) as required under 35 U.S.C 371(c)(4).

CONCLUSION

For the reason set forth above, the petition to revive the international application abandoned under 37 CFR 1.137(b) is **GRANTED** as to the National Stage in the United States of America, and will be processed, under 35 U.S.C. 371, as application number **11/579,751**, at this time.

The application has an international filing date of 24 January 2005, under 35 U.S.C. 363, but has not met the requirement of 35 U.S.C. 371(c)(4).

Application number **11/579,751** is being forwarded to the National Stage Processing Division of the Office of PCT Operations for further processing in accordance with this decision.

Taofiq A. Solola, PhD. JD.
PCT Legal Administration
Telephone: 571-272-6094
Facsimile: 571-272-0459

Leonard Smith
Supervisory PCT Legal Examiner
Office of PCT Legal Administration

UNITED STATES PATENT AND TRADEMARK OFFICE

UNITED STATES DEPARTMENT OF COMMERCE
United States Patent and Trademark Office
Address: COMMISSIONER FOR PATENTS
P.O. Box 1450
Alexandria, Virginia 22313-1450
www.uspto.gov

CALFEE HALTER & GRISWOLD, LLP
800 SUPERIOR AVENUE
SUITE 1400
CLEVELAND, OH 44114

Mail Date: 04/20/2010

Applicant	: Maurice A. Williams	: DECISION ON REQUEST FOR
Patent Number	: 7631596	: RECALCULATION of PATENT
Issue Date	: 12/15/2009	: TERM ADJUSTMENT IN VIEW
Appliction No	: 11/579,756	: OF WYETH AND NOTICE OF INTENT TO
Filed	: 11/03/2006	: ISSUE CERTIFICATE OF CORRECTION
		:

The Request for Recalculation is **GRANTED** to the extent indicated.

The patent term adjustment has been determined to be **0** days. The USPTO will *sua sponte* issue a certificate of correction reflecting the amount of PTA days determined by the recalculation.

Prior to the issuance of the certificate of correction, the USPTO will afford patentee an opportunity to be heard and request reconsideration. Accordingly, patentee has **one month or thirty (30) days**, whichever is longer, to file a request for reconsideration of this patent term adjustment calculation. See 35 U.S.C. 154(b)(3)(B)(ii) and 37 CFR 1.322(a)(4). No extensions of time will be granted under 37 CFR 1.136.

Patentee should use document code PET.OP if electronically filing a request for reconsideration of this patent term adjustment calculation. The patentee must also include the information required by 37 CFR 1.705(b)(2) and the fee required by 37 CFR 1.18(e). If patentee does not file a timely request for reconsideration of this patent term adjustment calculation including the information required by 37 CFR 1.705(b)(2) and the fee required by 37 CFR 1.18(e), the USPTO will issue a certificate of correction reflecting the PTA determination noted above.

Patentee should be aware that in order to preserve the right to review in the United States District Court for the District of Columbia of the USPTO patent term adjustment determination, patentee must ensure that he or she also take the steps required under 35 U.S.C. 154(b)(4)(A) in a timely manner. Nothing in the request for recalculation should be construed as providing an alternative time frame for commencing a civil action under 35 U.S.C. 154(b)(4)(A).

Any questions concerning this decision should be directed to the Office of Patent Legal Administration at 571-272-7702.

15 DEC 2006

UNITED STATES PATENT AND TRADEMARK OFFICE

COMMISSIONER FOR PATENTS
UNITED STATES PATENT AND TRADEMARK OFFICE
P.O. BOX 1450
ALEXANDRIA, VA 22313-1450
www.uspto.gov

ROBERTS, MARDULA & WERTHEIM, LLC
11800 SUNRISE VALLEY DRIVE
SUITE 1000
RESTON, VA 20191

In re Application of CORRY et al	:	
U.S. Application No.: 11/579,781	:	
PCT Application No.: PCT/GB2005/001627	:	
Int. Filing Date: 28 April 2005	:	DECISION
Priority Date Claimed: 28 April 2004	:	
Attorney Docket No.: 1056-004	:	
For: AUTHENTICATION OF RE-	:	
PRESENTABLE ITEMS	:	

This is in response to applicant's "Petition for Revival Under 37 C.F.R. § 1.137(b)" filed 07 November 2006.

BACKGROUND

On 28 April 2005, applicant filed international application PCT/GB2005/001627, which claimed priority of an earlier United Kingdom application filed 28 April 2004. A copy of the international application was communicated to the USPTO from the International Bureau on 10 November 2005. The thirty-month period for paying the basic national fee in the United States expired on 28 October 2006.

International application PCT/GB2005/001627 became abandoned as to the United States for failure to timely pay the basic national fee.

On 07 November 2006, applicant filed the present petition under 37 CFR 1.137(b).

DISCUSSION

Under 37 CFR 1.137(b), a petition requesting that an application be revived on the grounds of unintentional abandonment must be accompanied by: (1) the required reply unless previously filed, (2) the petition fee as set forth in 37 CFR 1.17(m), (3) a statement that the entire delay in filing the required reply from the due date for the reply until the filing of a grantable petition was unintentional, and (4) a terminal disclaimer if the application was filed before 08 June 1995.

With regard to item (1), applicant has provided the required basic national fee under 35 U.S.C. 371.

With regard to item (2), applicant has provided the required petition fee.

With regard to item (3), applicant has provided the required statement.

With regard to item (4), because the international application was filed after 08 June 1995, no terminal disclaimer is required.

CONCLUSION

For the reasons above, the petition under 37 CFR 1.137(b) is GRANTED.

This application is being forwarded to the United States Designated/Elected Office (DO/EO/US) for further processing in accordance with this decision, including preparation and mailing of a Notification of Missing Requirements under 35 U.S.C. 371 (Form PCT/DO/EO/905) indicating that an oath or declaration in compliance with 37 CFR 1.497 must be filed.

BryanLin

Bryan Lin
PCT Legal Examiner
PCT Legal Office

Telephone: 571-272-3303
Facsimile: 571-273-0459

UNITED STATES PATENT AND TRADEMARK OFFICE

UNITED STATES DEPARTMENT OF COMMERCE
United States Patent and Trademark Office
Address: COMMISSIONER FOR PATENTS
P.O. Box 1450
Alexandria, Virginia 22313-1450
www.uspto.gov

BACON & THOMAS, PLLC
625 SLATERS LANE
FOURTH FLOOR
ALEXANDRIA, VA 22314-1176

Mail Date: 06/08/2010

Applicant	: Livin Fernand Georges Dethier	: DECISION ON REQUEST FOR
Patent Number	: 7628350	: RECALCULATION of PATENT
Issue Date	: 12/08/2009	: TERM ADJUSTMENT IN VIEW
Application No	: 11/579,808	: OF WYETH AND NOTICE OF INTENT TO
Filed	: 11/07/2006	: ISSUE CERTIFICATE OF CORRECTION
		:

The Request for Recalculation is **GRANTED** to the extent indicated.

The patent term adjustment has been determined to be **337** days. The USPTO will *sua sponte* issue a certificate of correction reflecting the amount of PTA days determined by the recalculation.

Prior to the issuance of the certificate of correction, the USPTO will afford patentee an opportunity to be heard and request reconsideration. Accordingly, patentee has **one month or thirty (30) days**, whichever is longer, to file a request for reconsideration of this patent term adjustment calculation. See 35 U.S.C. 154(b)(3)(B)(ii) and 37 CFR 1.322(a)(4). No extensions of time will be granted under 37 CFR 1.136.

Patentee should use document code PET.OP if electronically filing a request for reconsideration of this patent term adjustment calculation. The patentee must also include the information required by 37 CFR 1.705(b)(2) and the fee required by 37 CFR 1.18(e). If patentee does not file a timely request for reconsideration of this patent term adjustment calculation including the information required by 37 CFR 1.705(b)(2) and the fee required by 37 CFR 1.18(e), the USPTO will issue a certificate of correction reflecting the PTA determination noted above.

Patentee should be aware that in order to preserve the right to review in the United States District Court for the District of Columbia of the USPTO patent term adjustment determination, patentee must ensure that he or she also take the steps required under 35 U.S.C. 154(b)(4)(A) in a timely manner. Nothing in the request for recalculation should be construed as providing an alternative time frame for commencing a civil action under 35 U.S.C. 154(b)(4)(A).

Any questions concerning this decision should be directed to the Office of Patent Legal Administration at 571-272-7702.

UNITED STATES PATENT AND TRADEMARK OFFICE

COMMISSIONER FOR PATENTS
UNITED STATES PATENT AND TRADEMARK OFFICE
P.O. BOX 1450
ALEXANDRIA, VA 22313-1450
www.uspto.gov

SOFER & HAROUN LLP.
317 MADISON AVENUE, SUITE 910
NEW YORK NY 10017

COPY MAILED

JUN 15 2009

OFFICE OF PETITIONS

In re Application of
Amigouet, et al.
Application No. 11/579,826
Filed: July 2, 2007
Attorney Docket No. 979-264

DECISION ON PETITION

This is a decision on the petition under 37 CFR 1.181, filed April 1, 2009, to withdraw the holding of abandonment. No fee is due in connection with this matter.

The petition is **GRANTED**.

This application was held abandoned for failure to timely respond to the non-final Office action mailed August 21, 2008. The non-final Office action set a three month shortened statutory period for reply. Notice of Abandonment was mailed March 18, 2009.

Petitioners have established, by virtue of a copy of a return postcard date stamped by the USPTO, that a response to the non-final Office action was timely filed November 12, 2008.

The reply previously filed has not to date been located. However, MPEP 503 states that "[a] post card receipt which itemizes and properly identifies the papers which are being filed serves as *prima facie* evidence of receipt in the USPTO of all the items listed thereon on the date stamped thereon by the USPTO." Accordingly, it is concluded that the reply was timely received in the USPTO but lost after receipt thereof.

In view of the above, the holding of abandonment is hereby withdrawn and the application restored to pending status.

The copy of the reply supplied with the petition will be accepted in place of the reply shown to have been received by the USPTO on November 12, 2008.

This application is being referred to Technology Center AU 2831 for appropriate action in the normal course of business on the reply received with petition.

Alesia M. Brown
Petitions Attorney
Office of Petitions

2 6 SEP 2007

UNITED STATES PATENT AND TRADEMARK OFFICE

Commissioner for Patents
United States Patent and Trademark Office
P.O. Box 1450
Alexandria, VA 22313-1450
www.uspto.gov

JOSEPH J. LAKS, VICE PRESIDENT
THOMSON LICENSING LLC
PATENT OPERATIONS
PO BOX 5312
PRINCETON NJ 08543-5312

In re Application of: HORENTRUP, Jobst, et al. U.S. Application No.: 11/579,844 PCT No.: PCT/EP2005/003867 International Filing Date: 13 April 2005 Priority Date: 10 May 2004 Attorney Docket No.: PD040074 For: METHOD FOR AUTOMATICALLY SELECTING A SOFTWARE APPLICATION	DECISION ON PETITION TO CHANGE INVENTOR'S NAME (37 CFR 1.182)

This decision is issued in response to applicants' response to the Notification Of Missing Requirements filed 27 July 2007, treated herein as a petition under 37 CFR 1.182 to change the name of record for inventor Dirk ADOLPH to Dirk GANDOLPH. Deposit Account No. 07-0832 will be charged the required $400 petition fee.

BACKGROUND

On 13 April 2005, applicants filed international application PCT/EP2005/003867. The application claimed a priority date of 10 May 2004, and it designated the United States. On 17 November 2005, the International Bureau (IB) communicated a copy of the international application to the United States Patent and Trademark Office (USPTO). The deadline for submission of the basic national fee was thirty months from the priority date, i.e., 10 November 2006. The published international application identified the second inventor as Dirk ADOLPH.

On 08 November 2006, applicants filed a Transmittal Letter for entry into the national stage in the United States accompanied by, among other materials, payment of the basic national fee and an executed declaration. However, the name of the second inventor as listed on the declaration was Dirk GANDOLPH.

On 19 June 2007, the United States Designated/Elected Office (DO/EO/US) mailed a "Notification Of Missing Requirements" (Form PCT/DO/EO/905) indicating that an oath or declaration in compliance with 37 CFR 1.497 was required. The Notification indicated that the declaration filed on 08 November 2006 was defective because the name of the second inventor on the declaration was different from this inventor's name on the published international application.

On 27 July 2007, applicants filed a response to the Notification Of Missing Requirements, with accompanying materials. The response is treated herein as a petition under 37 CFR 1.182 to change the name of record for inventor Dirk ADOLPH to Dirk GANDOLPH.

DISCUSSSION

Section 1893.01(e) of the Manual Of Patent Examining Procedure ("MPEP") states the following:

> Where ... the name of an inventor indicated in the international application during the international phase has changed such that the inventor's name is different from the corresponding name indicated in an oath or declaration submitted under 37 CFR 1.497, for example, on account of marriage, then a petition under 37 CFR 1.182 will be required to accept the oath or declaration with the changed name. See MPEP § 605.04(c). However, where the discrepancy between the name of the inventor indicated in the international application during the international phase and the name of the inventor as it appears in the oath or declaration submitted under 37 CFR 1.497 is the result of a typographical or transliteration error, then a petition under 37 CFR 1.182 will not be required. In such case, the Office should simply be notified of the error.

In the present application, the discrepancy between the second inventor's name as listed in the international application (ADOPLH) and in the filed declaration (GANDOLPH) is more than a "typographical or transliteration error." In fact, the present submission expressly states that the inventor has changed his name since the filing of the international application. Accordingly, in order to correct the name of record for this inventor, a grantable petition under 37 CFR 1.182 is required.

Section 605.04(c) of the MPEP, referred to above, sets forth the requirements for a petition under 37 CFR 1.182 to correct an inventor's name. According to the MPEP, such a petition "must include an appropriate petition fee and a statement signed by the inventor setting forth both names and the procedure whereby the change of name was effected, or a copy of the court order."

Applicants' 27 July 2007 submission included the authorization to charge Deposit Account No. 07-0832 for any required fees. Based on this authorization, Deposit Account No. 07-0832 will be charged the required $400 petition fee. Applicants' submission also includes a "Declaration Of Dirk Gandolph Correcting Error In The Inventive Entity Listed In The Published International Application" in which the inventor states that his name was legally changed from Dirk ADOLPH to Dirk GANDOLPH after the filing of the international application. These materials satisfy the requirements for a grantable petition under 37 CFR 1.182 to change the name of record for this inventor from Dirk ADOLPH to Dirk GANDOLPH.

Based on the correction of the name of the second inventor, the declaration filed on 08 November 2006 is no longer defective.

CONCLUSION

Applicants' petition under 37 CFR 1.182 to change the name of record for inventor Dirk ADOLPH to Dirk GANDOLPH is **GRANTED**.

Based on this correction, the declaration filed 08 November 2006 is acceptable in compliance with 37 CFR 1.497.

Deposit Account No. 07-0832 will be charged the required $400 petition fee.

This application is being referred to the National Stage Processing Branch of the Office Of PCT Operations for further processing in accordance with this decision, including correcting USPTO records to indicate that the name of record for the second inventor is Dirk GANDOLPH. The date under 35 U.S.C. 371(c)(1), (c)(2), and (c)(4) is 08 November 2006.

Richard M. Ross
Attorney Advisor
Office of PCT Legal Administration
Telephone: (571) 272-3296
Facsimile: (571) 273-0459

COMMISSIONER FOR PATENTS
UNITED STATES PATENT AND TRADEMARK OFFICE
P.O. BOX 1450
ALEXANDRIA, VA 22313-1450
www.uspto.gov

INTELLECTUAL PROPERTY GROUP
FREDRIKSON & BURON, P.A.
200 SOUTH SIXTH STREET
SUITE 400
MINNEAPOLIS, MN 55402

COPY MAILED
JAN 07 2009

Applicant: FIUME, et al.
Appl. No.: 11/579,857
International Filing Date: May 4, 2005
Title: PROCESS FOR PREPARATION OF DOXORUBICIN CONJUGATES WITH LACTOSAMINATED HUMAN ALBUMIN
Attorney Docket No.: 47966.28.1
Pub. No.: US 2007/0219351 A1
Pub. Date: September 20, 2007

This is a decision on the request entitled "Request for Correction and Issuance of Corrected Publication", received on March 12, 2008, treated as a request under 37 CFR 1.221.

The request is DISMISSED.

Applicants request does not meet the requirements of either 1.221 (a) or 1.221 (b). The request fails under 37 CFR 1.221 (b) since it is late, and it fails under 37 CFR 1.221(a) since it was not submitted in accord with the procedures set forth therein.

37 CFR 1.221 (b) is applicable "only when the Office makes a material mistake which is apparent from Office records.... Any request for a corrected publication or revised patent application publication other than provided as provided in paragraph (a) of this section must be filed within two months from the date of the patent application publication. This period is not extendable." A material mistake must affect the public's ability to appreciate the technical disclosure of the patent application publication, to determine the scope of the patent application publication, or to determine the scope of the provisional rights that an applicant may seek to enforce upon issuance of a patent. [1]

The instant request for corrected publication was filed on March 12, 2008, for correction of a publication dated September 20, 2007. The request fails to meet the 2 month time limitation set forth in 37 CFR 1.221(b), which would require any request to be filed by November 20, 2007. Furthermore, a spelling error in an inventor's name does not affect the public's ability to appreciate the technical disclosure of the patent application publication, or determine the scope

[1] Changes to Implement Eighteen-Month Publication of Patent Applications, 65 FR 57023, 57038 (Sept. 20, 2000), 1239, Off. Gaz. Pat. Office Notices 63, 75 (Oct. 10, 2000) (final rule).

of the patent application publication or determine the scope of the provisional rights that an applicant may seek to enforce upon issuance of a patent.

As to the republication request under 37 CFR 1.221(a), applicants have failed to meet the requirements, which state that such a request "must include a copy of the application compliance with the Office's electronic filing system requirements and be accompanied by the publication fee set forth in § 1.18(d) and the processing fee set forth in § 1.17(i)."

The applicant is advised that a "request for republication of an application previously published" may be filed under 37 CFR 1.221(a). Such a request for republication "must include a copy of the application compliance with the Office's electronic filing system requirements and be accompanied by the publication fee set forth in § 1.18(d) and the processing fee set forth in § 1.17(i)." If the request for republication does not comply with the electronic filing system requirements, the republication will not take place and the publication fee set forth in § 1.18(d) will be refunded. The processing fee will be retained.

Any request for republication under 37 CFR 1.221(a), must be submitted via the EFS system, as a "Pre-Grant Publication" and questions or request for reconsideration of the decision, should be addressed as follows:

By mail to: Mail Stop PGPUB
Commissioner for Patents
P.O. Box 1450
Alexandria, Va. 22313-1450

Inquiries relating to this matter may be directed to Michael Cygan, Legal Advisor, at (571) 272-7700, or to the undersigned at (571) 272-7709.

Mark Polutta
Senior Legal Advisor
Office of Patent Legal Administration
Office of the Deputy Commissioner
for Patent Examination Policy

UNITED STATES PATENT AND TRADEMARK OFFICE

Commissioner for Patents
United States Patent and Trademark Office
P.O. Box 1450
Alexandria, VA 22313-1450
www.uspto.gov

NIXON & VANDERHYE, PC
901 NORTH GLEBE ROAD, 11TH FLOOR
ARLINGTON VA 22203

MAILED

JUL 26 2010

OFFICE OF PETITIONS

In re Application of :
Fabrizio RAMACCIONI :
Application No. 11/579,870 : DECISION ON PETITION
Filed: November 8, 2006 :
Attorney Docket No. 4161-20 AMK) :

This is a decision on the petition under the unintentional provisions of 37 CFR 1.137(b), filed June 11, 2010, to revive the above-identified application.

The petition is **GRANTED**.

The application became abandoned for failure to reply in a timely manner to the non-final Office action mailed, March 13, 2009, which set a shortened statutory period for reply of three (3) months. No extensions of time under the provisions of 37 CFR 1.136(a) were obtained. Accordingly, the application became abandoned on June 14, 2009.

The petition satisfies the requirements of 37 CFR 1.137(b) in that petitioner has supplied (1) the reply in the form of an amendment, (2) the petition fee of $810; and (3) an adequate statement of unintentional delay.

37 CFR 1.137(b)(3) requires a statement that "the entire delay in filing the required reply from the due date for the reply until the filing of a grantable petition pursuant to 37 CFR 1.137(b) was unintentional." Since the statement appearing in the petition varies from the language required by 37 CFR 1.137(b)(3), the statement is being construed as the required statement. Petitioner must notify the Office if this is **not** a correct reading of the statement appearing in the petition.

Telephone inquiries concerning this decision should be directed to the undersigned at (571) 272-6735.

This application is being referred to Technology Center AU 1797 for appropriate action by the Examiner in the normal course of business.

/dcg/
Diane C. Goodwyn
Petitions Examiner
Office of Petitions

UNITED STATES PATENT AND TRADEMARK OFFICE

UNITED STATES DEPARTMENT OF COMMERCE
United States Patent and Trademark Office
Address: COMMISSIONER FOR PATENTS
P.O. Box 1450
Alexandria, Virginia 22313-1450
www.uspto.gov

CROMPTON, SEAGER & TUFTE, LLC
1221 NICOLLET AVENUE
SUITE 800
MINNEAPOLIS, MN 55403-2420

Mail Date: 04/21/2010

Applicant	: Regis Le Couedic	: DECISION ON REQUEST FOR
Patent Number	: 7588601	: RECALCULATION of PATENT
Issue Date	: 09/15/2009	: TERM ADJUSTMENT IN VIEW
Appliction No	: 11/579,891	: OF WYETH AND NOTICE OF INTENT TO
Filed	: 11/09/2006	: ISSUE CERTIFICATE OF CORRECTION
		:

The Request for Recalculation is **GRANTED** to the extent indicated.

The patent term adjustment has been determined to be **348** days. The USPTO will *sua sponte* issue a certificate of correction reflecting the amount of PTA days determined by the recalculation.

Prior to the issuance of the certificate of correction, the USPTO will afford patentee an opportunity to be heard and request reconsideration. Accordingly, patentee has **one month or thirty (30) days**, whichever is longer, to file a request for reconsideration of this patent term adjustment calculation. See 35 U.S.C. 154(b)(3)(B)(ii) and 37 CFR 1.322(a)(4). No extensions of time will be granted under 37 CFR 1.136.

Patentee should use document code PET.OP if electronically filing a request for reconsideration of this patent term adjustment calculation. The patentee must also include the information required by 37 CFR 1.705(b)(2) and the fee required by 37 CFR 1.18(e). If patentee does not file a timely request for reconsideration of this patent term adjustment calculation including the information required by 37 CFR 1.705(b)(2) and the fee required by 37 CFR 1.18(e), the USPTO will issue a certificate of correction reflecting the PTA determination noted above.

Patentee should be aware that in order to preserve the right to review in the United States District Court for the District of Columbia of the USPTO patent term adjustment determination, patentee must ensure that he or she also take the steps required under 35 U.S.C. 154(b)(4)(A) in a timely manner. Nothing in the request for recalculation should be construed as providing an alternative time frame for commencing a civil action under 35 U.S.C. 154(b)(4)(A).

Any questions concerning this decision should be directed to the Office of Patent Legal Administration at 571-272-7702.

UNITED STATES PATENT AND TRADEMARK OFFICE

28 AUG 2008

Commissioner for Patents
United States Patent and Trademark Office
P.O. Box 1450
Alexandria, VA 22313-1450
www.uspto.gov

Howard IP Law Group
P.O. Box 226
Fort Washington PA 19034

In re Application of:	:	
KOTULLA, Carmen	:	
U.S. Application No.: 11/579,914	:	DECISION ON PETITION
PCT Application No.: PCT/DE2005/000856	:	(37 CFR 1.182)
International Filing Date: 07 May 2005	:	
Priority Date: 11 May 2004	:	
Attorney's Docket No.: PPRPB-26	:	
For: MOSAIC	:	

This decision is issued in response to applicant's "Petition Under 37 CFR 1.182" filed 07 August 2008. Applicant has submitted the required petition fee.

BACKGROUND

The procedural background for the present application was set forth in the Communication mailed 04 August 2008. That Communication indicated that a petition under 37 CFR 1.182 was required to correct the apparent error in the international application number listed in the Form PTO-1390 Transmittal Letter filed herein on 08 November 2006.

On 07 August 2008, applicant filed the "Petition Under 37 CFR 1.182" considered herein.

DISCUSSION

As set forth in the previous Communication, the international application number listed on the Form PTO-1390 Transmittal Letter filed on 08 November 2006 appeared to incorrectly identify the international application to which the present national stage filing was directed. Correction of this error is required before the materials filed 08 November 2006 can be treated as having been directed to international application PCT/DE2005/000856, as necessary to avoid abandonment of this international application with respect to the United States.

In the present petition, applicant confirms that the identification of international application PCT/US2005/000856 on the Form PTO-1390 Transmittal Letter filed 08 November 2006 was incorrect, and that the correct international application is PCT/DE2005/000856. As noted in the petition, the correct international application number was listed on the materials filed 08 November 2006, specifically, on the first page of the international publication of PCT/DE2005/000856 included with such submission. Finally, applicant has provided the required petition fee.

The present submission satisfies the requirements for a grantable petition to correct the error in the international application number listed on the Form PTO-1390 filed 08 November 2006. Accordingly, the materials filed herein on 08 November 2006 will be treated as having been directed to international application PCT/DE2005/000856.

CONCLUSION

Applicant's petition under 37 CFR 1.182 is **GRANTED**.

The materials filed herein on 08 November 2006 will be treated as the U.S. national stage of PCT/DE2005/000856.

The application is being referred to the National Stage Processing Branch of the Office of PCT Operations for further processing in accordance with this decision, including the mailing of a Notification Of Missing Requirements (Form PCT/DO/EO/905).

Richard M. Ross
Attorney Advisor
Office of PCT Legal Administration
Telephone: (571) 272-3296
Facsimile: (571) 273-0459

DATE (17 Sep 07)

APPLICATION NUMBER 11/579916

DOC CODE PET DEC D0/ED

DOC DATE 9-17-07

DELIVER THE ATTACHED FIFLE/DOCUMENT TO THE TC SCANNING CENTER

CONTRACTOR: THE ATTACHED FILE/DOCUMENT MUST BE INDEXED AND SCANNED INTO IFW WITHIN **8** WORK HOURS; UPLOADING OF THE SCANNED IMAGES SHOULD OCCUR NO LATER THAN **16** WORK HOURS FOLLOWING RECEIPT OF THIS REQUEST

AFTER SCANNING, ORIGINAL DOCUMENTS SHOULD BE BOXED IN ACCORDANCE WITH INSTRUCTIONS

United States Patent and Trademark Office

Commissioner for Patents
United States Patent and Trademark Office
P.O. Box 1450
Alexandria, VA 22313-1450
www.uspto.gov

17 SEP 2007

KNOBBE MARTENS OLSON & BEAR LLP
2040 MAIN STREET
FOURTEENTH FLOOR
IRVINE CA 92614

In re Application of	:	
De Vreese et al.	:	
Application No. 11/579,916	:	
PCT No.: PCT/EP05/02788	:	
Int. Filing Date: 16 March 2005	:	DECISION
Priority Date: 11 May 2004	:	
Att. Docket No.: DECLE127.001APC	:	
For: Method And Device For Enhancing	:	
The Treatment Of Teeth And Gums	:	

This is in response to the correspondence filed on 14 June 2007.

BACKGROUND

This international application was filed on 16 March 2005, claimed an earliest priority date of 11 May 2004, and designated the United States. The International Bureau transmitted a copy of the published international application to the USPTO on 17 November 2005. The period for payment of the basic national fee in the United States expired as of midnight on 11 November 2006. On 08 November 2006, applicants filed *inter alia* the basic national fee.

On 11 June 2007, a Notification of Missing Requirements (Form PCT/DO/EO/905) was mailed to applicants, requiring the submission of an oath or declaration compliant with 37 CFR 1.497(a) and (b) and a surcharge under 37 CFR 1.492(h), because the declaration "does not identify the application to which it is directed."

DISCUSSION

Counsel requests withdrawal of the requirement for a new declaration (and surcharge) on the basis that a declaration under PCT Rule 4.17(iv) allegedly was filed during the international phase. Review of the record reveals that in fact such a declaration was filed, and published with the international application on 17 November 2005. Inspection of the declaration under PCT Rule 4.17(iv) reveals that it is acceptable for purposes of compliance with 37 CFR 1.497(a) and (b). Therefore, the Notification of Missing Requirements mailed on 11 June 2007 is **VACATED**.

CONCLUSION

The request is **GRANTED** as described above.

This application is being forwarded to the National Stage Processing Branch for further processing. Its date under 35 U.S.C. 371(c)(1), (2) and (4) is **08 November 2006**.

George Dombroske
PCT Legal Examiner
Office of PCT Legal Administration
Tel: (571) 272-3283
Fax: (571) 273-0459

2 5 OCT 2007

United States Patent and Trademark Office

Commissioner for Patents
United States Patent and Trademark Office
P.O. Box 1450
Alexandria, VA 22313-1450
www.uspto.gov

KNOBBE MARTENS OLSON & BEAR LLP
2040 MAIN STREET
FOURTEENTH FLOOR
IRVINE CA 92614

In re Application of	:	
De Vreese et al.	:	
Application No. 11/579,916	:	
PCT No.: PCT/EP05/02788	:	SUPPLEMENTAL
Int. Filing Date: 16 March 2005	:	
Priority Date: 11 May 2004	:	COMMUNICATION
Att. Docket No.: DECLE127.001APC	:	
For: Method And Device For Enhancing	:	
The Treatment Of Teeth And Gums	:	

This communication supplements the Decision mailed on 17 September 2007.

DISCUSSION

The Decision mailed on 17 September 2007 stated in part that

> Counsel requests withdrawal of the requirement for a new declaration (and surcharge) on the basis that a declaration under PCT Rule 4.17(iv) allegedly was filed during the international phase. Review of the record reveals that in fact such a declaration was filed, and published with the international application on 17 November 2005. Inspection of the declaration under PCT Rule 4.17(iv) reveals that it is acceptable for purposes of compliance with 37 CFR 1.497(a) and (b). Therefore, the Notification of Missing Requirements mailed on 11 June 2007 is **VACATED**.

Further inspection of said declaration under PCT Rule 4.17(iv) reveals that it does not appear to properly identify the international application which is being executed. It does not explicitly identify the international application number to which it is directed, and the inventors' signatures are dated 24 June 2005 and "5/6/05," both of which were clearly later than the international filing date. This shows that the declaration document was not included among the papers filed on the international filing date. Since it is not clear that the declaration was directed to the instant international application, it is not acceptable for purposes of compliance with 37 CFR 1.497(a) and (b). Therefore, the indication appearing in the Decision mailed on 17 September 2007 that the date of this application "under 35 U.S.C. 371(c)(1), (2) and (4) is 08 November 2006" was in error, and is hereby **VACATED**.

CONCLUSION

This application is being returned to the National Stage Processing Branch for further processing, including the preparation and mailing of a new Notification of Missing Requirements (Form PCT/DO/EO/905) requiring the submission of an oath or declaration compliant with 37 CFR 1.497(a) and (b) and the surcharge under 37 CFR 1.492(h).

George Dombroske
PCT Legal Examiner
Office of PCT Legal Administration
Tel: (571) 272-3283
Fax: (571) 273-0459

Leonard Smith
Supervisory PCT Legal Examiner
Office of PCT Legal Administration

07 DEC 2006

UNITED STATES PATENT AND TRADEMARK OFFICE

COMMISSIONER FOR PATENTS
UNITED STATES PATENT AND TRADEMARK OFFICE
P.O. BOX 1450
ALEXANDRIA, VA 22313-1450
www.uspto.gov

Horst M. Kasper
13 Forest Drive
Warren, N.J. 07059

In re Application of:
Nill Wolf-Eberhard et al.
Application No.: 11/579, 939
PCT Application No.: PCT/EP05/06610
Int. Filing Date: 24 January 2005
Priority Date Claimed: 24 January 2004
Attorney Docket No.: MSA267
For: Device and Method for Recovering Fractional Hydrocarbons from Recycled Plastic Fractions and/or Oily Residues.

DECISION ON PETITION UNDER 37 CFR 1.137(b)

This is in response to Applicants' "Petition for Revival of an International Application for Patent Designating the U.S. Abandoned Unintentionally under 37 CFR 1.137(b)" filed 08 November 2006.

BACKGROUND

On 24 January 2005, Applicants filed international application PCT/EP05/00661, which claimed a priority of an earlier application from Germany filed on 24 January 2004. The thirty-month period for paying the basic national fee in the United States expired at midnight on 24 July 2006.

International application PCT/EP05/00661 became abandoned as to the United States for failure to timely pay the basic national fee.

On 08 November 2006, applicants filed the present petition under 37 CFR 1.137(b).

DISCUSSION

A petition to revive an abandoned application under 37 CFR 1.137(b) must be filed without intentional delay from the time the application became abandoned and/or

applicant first became aware of the abandoned status of the application. A petition under 37 CFR 1.137(b) must be accompanied by (1) the required reply, (2) the petition as set forth in 37 CFR 1.17(m), (3) a statement that the entire delay in filing the required reply from the due date for the reply until the filing of a grantable petition was unintentional, and (4) a terminal disclaimer and fee (if the international application was filed prior to June 8, 1995).

With regard to Item (1), applicants have provided the required reply under 35 U.S.C. 371. A copy of the international application and the basic national fee has been filed in the United States Receiving Office (RO/US).

With regard to Item (2), the appropriate petition fee of $750 as required by 37 CFR 1.17(m) has been paid.

With regard to Item (3), Applicants' statement that "[t]he entire delay in filing the required reply from the due date for the required reply until the filing of a grantable petition under 37 CFR 1.137(b) was unintentional" has been satisfied.

With regard to Item (4), a terminal disclaimer is not required since this application was filed after 08 June 1995.

A review of the application file reveals that applicants have satisfied the requirements of 37 CFR 1.137(b), and satisfies the requirements under 35 U.S.C. 371 for entry into the national stage in the United States.

A review of the declaration filed 08 November 2006 reveals that it is not signed by Gerold Weser, one of the applicants/inventors named in the international application.

CONCLUSION

For the reason set forth above, the petition to revive the international application abandoned under 37 CFR 1.137(b) is **GRANTED** as to the National Stage in the United States of America, and will be processed, under 35 U.S.C. 371, as application number **11/579,939**, at this time.

The application has an international filing date of 24 January 2005, under 35 U.S.C. 363.

Application number **11/579,939** is being forwarded to the National Stage Processing Division of the Office of PCT Operations for further processing in accordance with this decision.

Taofiq A. Solola, PhD. JD.
PCT Legal Administration
Telephone: 571-272-6094
Facsimile: 571-272-0459

Leonard Smith
Supervisory PCT Legal Examiner
Office of PCT Legal Administration

UNITED STATES PATENT AND TRADEMARK OFFICE

UNITED STATES DEPARTMENT OF COMMERCE
United States Patent and Trademark Office
Address: COMMISSIONER FOR PATENTS
P.O. Box 1450
Alexandria, Virginia 22313-1450
www.uspto.gov

BIRCH STEWART KOLASCH & BIRCH
PO BOX 747
FALLS CHURCH, VA 22040-0747

Mail Date: 04/20/2010

Applicant	: Masayuki Osaki	: DECISION ON REQUEST FOR
Patent Number	: 7651592	: RECALCULATION of PATENT
Issue Date	: 01/26/2010	: TERM ADJUSTMENT IN VIEW
Appliction No	: 11/579,955	: OF WYETH AND NOTICE OF INTENT TO
Filed	: 11/09/2006	: ISSUE CERTIFICATE OF CORRECTION
		:

The Request for Recalculation is **GRANTED** to the extent indicated.

The patent term adjustment has been determined to be **188** days. The USPTO will *sua sponte* issue a certificate of correction reflecting the amount of PTA days determined by the recalculation.

Prior to the issuance of the certificate of correction, the USPTO will afford patentee an opportunity to be heard and request reconsideration. Accordingly, patentee has **one month or thirty (30) days**, whichever is longer, to file a request for reconsideration of this patent term adjustment calculation. See 35 U.S.C. 154(b)(3)(B)(ii) and 37 CFR 1.322(a)(4). No extensions of time will be granted under 37 CFR 1.136.

Patentee should use document code PET.OP if electronically filing a request for reconsideration of this patent term adjustment calculation. The patentee must also include the information required by 37 CFR 1.705(b)(2) and the fee required by 37 CFR 1.18(e). If patentee does not file a timely request for reconsideration of this patent term adjustment calculation including the information required by 37 CFR 1.705(b)(2) and the fee required by 37 CFR 1.18(e), the USPTO will issue a certificate of correction reflecting the PTA determination noted above.

Patentee should be aware that in order to preserve the right to review in the United States District Court for the District of Columbia of the USPTO patent term adjustment determination, patentee must ensure that he or she also take the steps required under 35 U.S.C. 154(b)(4)(A) in a timely manner. Nothing in the request for recalculation should be construed as providing an alternative time frame for commencing a civil action under 35 U.S.C. 154(b)(4)(A).

Any questions concerning this decision should be directed to the Office of Patent Legal Administration at 571-272-7702.

01 DEC 2006

UNITED STATES PATENT AND TRADEMARK OFFICE

Commissioner for Patents
United States Patent and Trademark Office
P.O. Box 1450
Alexandria, VA 22313-1450
www.uspto.gov

LEYDIG VOIT & MAYER, LTD
TWO PRUDENTIAL PLAZA, SUITE 4900
180 NORTH STETSON AVENUE
CHICAGO IL 60601-6731

In re Application of LUBOWSKI et al. Application No.: 11/579,963 PCT No.: PCT/AU04/00610 Int. Filing: 10 May 2004 Priority Date: 09 May 2003 Attorney Docket No.: 255470 For: IMPROVED SIGMOIDOSCOPE WITH INTEGRAL OBTURATOR	DECISION ON PETITION TO REVIVE UNDER 37 CFR 1.137(b)

The petition to revive under 37 CFR 1.137(b) filed 09 November 2006 in the above-captioned application is hereby **GRANTED** as follows:

Applicant's statement that the "entire delay in filing the required reply from the due date for the required reply until the filing of a grantable petition under 37 CFR 1.137(b) was unintentional" meets the requirements of 37 CFR 1.137(b)(3).

A review of the application file reveals that the basic national fee of $150 has been provided. The required petition fee of $750 was also paid. Thus, the requirements of 37 CFR 1.137(b) have been satisfied. Therefore, the request to revive the application abandoned under 35 U.S.C. 371(d) is granted as to the National stage in the United States of America.

This application is being forwarded to the United States Designated/Elected Office for further processing, including issuance of a Notification of Missing Requirements indicating that an oath or declaration, in compliance with 37 CFR 1.497(a) and (b) and the $130 surcharge for filing the oath or declaration after the thirty month period, is required.

Cynthia M. Kratz

Cynthia M. Kratz
Attorney Advisor
PCT Legal Office
Office of PCT Legal Administration

Telephone: (571) 272-3286
Facsimile: (571) 273-0459

UNITED STATES PATENT AND TRADEMARK OFFICE

Commissioner for Patents
United States Patent and Trademark Office
P.O. Box 1450
Alexandria, VA 22313-1450
www.uspto.gov

FINNEGAN, HENDERSON, FARABOW,
GARRETT & DUNNER, LLP
901 NEW YORK AVENUE, NW
WASHINGTON DC 20001-4413

COPY MAILED

NOV 27 2009

OFFICE OF PETITIONS

In re Application of	:	
Anthony David Harman, et al.	:	
Application No. 11/580,020	:	DECISION GRANTING PETITION
Filed: October 13, 2006	:	UNDER 37 CFR 1.313(c)(2)
Attorney Docket No. 07588.0062-02000	:	

This is a decision on the petition under 37 CFR 1.313(c)(2), filed November 25, 2009, to withdraw the above-identified application from issue after payment of the issue fee.

The petition is **GRANTED**.

The above-identified application is withdrawn from issue for consideration of a submission under 37 CFR 1.114 (request for continued examination). *See* 37 CFR 1.313(c)(2).

Petitioner is advised that the issue fee paid on November 5, 2009 cannot be refunded. If, however, this application is again allowed, petitioner may request that it be applied towards the issue fee required by the new Notice of Allowance.[1]

Telephone inquiries regarding this decision should be directed to undersigned at (571) 272-1642. All other inquiries concerning the examination or status of this application should be directed to the Technology Center.

This application is being referred to Technology Center AU 1619 for processing of the request for continued examination under 37 CFR 1.114 and for consideration of the concurrently filed amendment.

/AMW/
April M. Wise
Petitions Examiner
Office of Petitions

---

[1] *The request to apply the issue fee to the new Notice may be satisfied by completing and returning the new Part B – Fee(s) Transmittal Form (along with any balance due at the time of submission). Petitioner is advised that the Issue Fee Transmittal Form must be completed and timely submitted to avoid abandonment of the application.*

UNITED STATES PATENT AND TRADEMARK OFFICE

Commissioner for Patents
United States Patent and Trademark Office
P.O. Box 1450
Alexandria, VA 22313-1450
www.uspto.gov

DON CARNEGIE
SUITE 5A PMB540
5405 ALTON PARKWAY
IRVINE, CA 92604

COPY MAILED

NOV 27 2007

OFFICE OF PETITIONS

In re Application of	:	
Malnati, Stefano	:	
Application No. 11/580,037	:	DECISION ON PETITION
Filed: October 3, 2006	:	
Attorney Docket No. DC.1033R	:	

This is a decision on the petition under the unintentional provisions of 37 CFR 1.137(b), filed October 29, 2007, to revive the above-identified application.

The petition is **GRANTED**.

The petition satisfies the requirements of 37 CFR 1.137(b) in that petitioner has supplied (1) the reply in the form of an Oath/Declaration and late surcharge, (2) the petition fee, and (3) a proper statement of unintentional delay.

An extension of time under 37 CFR 1.136 must be filed prior to the expiration of the maximum extendable period for reply. See In re Application of S., 8 USPQ2d 1630, 1631 (Comm'r Pats. 1988). Accordingly, since the $1115.00 extension of time fee submitted with the petition on October 29, 2007, was subsequent to the maximum extendable period for reply, this fee is unnecessary and will be credited to petitioner's deposit account as authorized.

Telephone inquiries concerning this decision should be directed to the undersigned at (571) 272-3206.

This matter is being referred to the Office of Initial Patent Examination for further processing.

Liana Walsh
Petitions Examiner
Office of Petitions

UNITED STATES PATENT AND TRADEMARK OFFICE

Commissioner for Patents
United States Patent and Trademark Office
P.O. Box 1450
Alexandria, VA 22313-1450
www.uspto.gov

FINNEGAN, HENDERSON, FARABOW,
GARRETT & DUNNER, LLP
901 NEW YORK AVENUE, NW
WASHINGTON DC 20001-4413

COPY MAILED

NOV 27 2009

OFFICE OF PETITIONS

In re Application of	:	
Anthony David Harman, et al.	:	
Application No. 11/580,059	:	DECISION GRANTING PETITION
Filed: October 13, 2006	:	UNDER 37 CFR 1.313(c)(2)
Attorney Docket No. 07588.0062-01000	:	

This is a decision on the petition under 37 CFR 1.313(c)(2), filed November 25, 2009, to withdraw the above-identified application from issue after payment of the issue fee.

The petition is **GRANTED**.

The above-identified application is withdrawn from issue for consideration of a submission under 37 CFR 1.114 (request for continued examination). *See* 37 CFR 1.313(c)(2).

Petitioner is advised that the issue fee paid on November 5, 2009 cannot be refunded. If, however, this application is again allowed, petitioner may request that it be applied towards the issue fee required by the new Notice of Allowance.[1]

Telephone inquiries regarding this decision should be directed to undersigned at (571) 272-1642. All other inquiries concerning the examination or status of this application should be directed to the Technology Center.

This application is being referred to Technology Center AU 1619 for processing of the request for continued examination under 37 CFR 1.114 and for consideration of the concurrently filed amendment.

/AMW/
April M. Wise
Petitions Examiner
Office of Petitions

---

[1] *The request to apply the issue fee to the new Notice may be satisfied by completing and returning the new Part B – Fee(s) Transmittal Form (along with any balance due at the time of submission). Petitioner is advised that the Issue Fee Transmittal Form* ***must*** *be completed and timely submitted to avoid abandonment of the application.*

UNITED STATES PATENT AND TRADEMARK OFFICE

UNITED STATES DEPARTMENT OF COMMERCE
United States Patent and Trademark Office
Address: COMMISSIONER FOR PATENTS
P.O. Box 1450
Alexandria, Virginia 22313-1450
www.uspto.gov

APPLICATION NO.	FILING DATE	FIRST NAMED INVENTOR	ATTORNEY DOCKET NO.	CONFIRMATION NO.
11/580,072	10/13/2006	Joon-chan Park	52417	5614

7590 10/07/2008
ROYLANCE, ABRAMS, BERDO & GOODMAN, L.L.P.
1300 19TH STREET, N.W.
SUITE 600
WASHINGTON,, DC 20036

EXAMINER
PAK, SUNG H

ART UNIT	PAPER NUMBER
2874	

MAIL DATE	DELIVERY MODE
10/07/2008	PAPER

DECISION GRANTING PETITION UNDER 37 CFR 1.138(d)

The declaration of express abandonment is recognized

This is in response to the petition under 37 CFR 1.138(d), requesting for a refund of any previously paid search fee and excess claims fee in the above-identified application.

The petition is granted.

The express abandonment is recognized. Any previously paid search fee and excess claims fee are hereby refunded.

Telephone inquiries should be directed to the Office of Data Management at (571) 272-4200.

Nicole Farmer

Patent Publication Branch
Office of Data Management

Refund Ref:
10/07/2008 NFARMER 0000164681

CHECK Refund Total: $500.00

Adjustment date: 10/07/2008 NFARMER
10/16/2006 EAYALEW1 00000065 11580072
02 FC:1111 -500.00 OP

FORM PET651G (Rev. 08/07)

UNITED STATES PATENT AND TRADEMARK OFFICE

Commissioner for Patents
United States Patent and Trademark Office
P.O. Box 1450
Alexandria, VA 22313-1450
www.uspto.gov

Paper No.

CROWELL & MORING LLP
INTELLECTUAL PROPERTY GROUP
P.O. BOX 14300
WASHINGTON DC 20044-4300

COPY MAILED

MAY 14 2008

OFFICE OF PETITIONS

In re Application of	:	
Richard L. Duncum, Thomas M.	:	
Netsch, Albert L. O'Bryant,	:	
Brian W. Pahl, and Mark A.	:	
Schroder	:	
Application No. 11/580,074	:	
Filed: October 13, 2006	:	DECISION ON PETITION
Attorney Docket No.	:	PURSUANT TO 37 C.F.R.
037146.49261C5	:	§ 1.47(A)
Title: SEALED MAGNET TRAP	:	
ARRANGEMENT	:	

This is in response to the petition pursuant to 37 C.F.R. § 1.47(a), filed May 31, 2007.

This petition is **DISMISSED**.

On October 13, 2006, this application was filed, identifying Richard L. Duncum, Thomas M. Netsch, Albert L. O'Bryant, Brian W. Pahl, and Mark A. Schroder as joint inventors. The application was deposited without an executed oath or declaration. On

October 31, 2006, a "Notice to File Missing Parts of Nonprovisional Application - Filing Date Granted" (Notice) was mailed, indicating that a fully executed oath or declaration and the associated surcharge were required. This Notice set a two-month period for reply.

Along with this petition, Petitioner has submitted, *inter alia*, a declaration which has been executed by each of the joint inventors save Mr. O'Bryant along with the surcharge associated with the late submission of the same, a statement of facts, the petition fee, the last known address of the non-signing inventor, a copy of a letter, and a five-month extension of time to make timely this response.

A grantable petition pursuant to 37 C.F.R. § 1.47(a) requires:

(1) the petition fee of $200;
(2) a surcharge of either $65 or $130 if the petition is not filed at the time of filing the application, as set forth in 37 C.F.R. § 1.16(e);
(3) a statement of the last known address of the non-signing inventors;
(4) either
  a) proof that a copy of the entire application (specification, claims, drawings, and the oath or declaration) was sent or given to the non-signing inventor for review and proof that the non-signing inventor refuses to join in the application or
  b) proof that the non-signing inventor cannot be found or reached after diligent effort, and;
(5) a declaration which complies with 37 C.F.R. § 1.63.

The petition has met requirements (1) - (3) and (5) of Rule 1.47(a).

Regarding the fourth requirement of Rule 1.47(a), **Petitioner has not submitted adequate proof that a complete copy of the application was sent to the non-signing inventor**. Petitioner has asserted that the purported assignee sent a copy of the declaration and the power of attorney to the non-signing inventor. The petition appears to be silent regarding the inclusion of a complete copy of the application with this

mailing, and as such, it does not appear that the non-signing inventor was presented with a copy of the entire application. Moreover, it does not appear that Petitioner has firsthand knowledge of this mailing

It follows that one cannot refuse to sign something which one has not been presented with. A refusal by an inventor to sign an oath or declaration when the inventor has not been presented with the application papers does not itself suggest that the inventor is refusing to join the application unless it is clear that the inventor understands exactly what he or she is being asked to sign and refuses to accept the application papers. It is reasonable to require that the inventor be presented with the application papers before a petition pursuant to 37 C.F.R. § 1.47 is granted since such a procedure ensures that the inventor is apprised of the application to which the oath or declaration is directed[1].

Before filing the renewed petition, Petitioner should mail a complete copy of the application to the last known residential address of the non-signing joint inventor, and provide him with a reasonable period of time to respond. A statement should be provided from the individual having firsthand knowledge of this mailing.

Any reply must be submitted within **TWO MONTHS** from the mail date of this decision. Extensions of time under 37 C.F.R. § 1.136(a) are permitted. The reply should include a cover letter entitled "Renewed Petition pursuant to 37 C.F.R. § 1.47(a)". This is not a final agency action within the meaning of 5 U.S.C § 704.

The renewed petition should indicate in a prominent manner that the attorney handling this matter is Paul Shanoski, and may be submitted by mail[2], hand-delivery[3], or facsimile[4].

If responding by mail, Petitioner is advised not to place the undersigned's name on the envelope. Only the information that appears in the footnote should be included - adding anything else to the address will delay the delivery of the response to the undersigned.

---

1 In re Gray, 115 USPQ 80 (Comm'r Pat. 1956).
2 Mail Stop Petition, Commissioner for Patents, United States Patent and Trademark Office, P.O. Box 1450, Alexandria, VA, 22313-1450.
3 Customer Window, Randolph Building, 401 Dulaney Street, Alexandria, VA, 22314.
4 (571) 273-8300- please note this is a central facsimile number.

Telephone inquiries regarding *this decision* should be directed to the undersigned at (571) 272-3225[5].

/Paul Shanoski/
Paul Shanoski
Senior Attorney
Office of Petitions

5 Petitioner will note that all practice before the Office should be in writing, and the action of the Office will be based exclusively on the written record in the Office. See 37 C.F.R. § 1.2. As such, Petitioner is reminded that no telephone discussion may be controlling or considered authority for any further action(s) of Petitioner.

UNITED STATES PATENT AND TRADEMARK OFFICE

UNITED STATES DEPARTMENT OF COMMERCE
United States Patent and Trademark Office
Address: COMMISSIONER FOR PATENTS
P.O. Box 1450
Alexandria, Virginia 22313-1450
www.uspto.gov

BUCHANAN, INGERSOLL & ROONEY PC
POST OFFICE BOX 1404
ALEXANDRIA, VA 22313-1404

Mail Date: 04/20/2010

Applicant	: Toshio Nakane	: DECISION ON REQUEST FOR
Patent Number	: 7648748	: RECALCULATION of PATENT
Issue Date	: 01/19/2010	: TERM ADJUSTMENT IN VIEW
Appliction No	: 11/580,091	: OF WYETH AND NOTICE OF INTENT TO
Filed	: 10/13/2006	: ISSUE CERTIFICATE OF CORRECTION
		:

The Request for Recalculation is **GRANTED** to the extent indicated.

The patent term adjustment has been determined to be **574** days. The USPTO will *sua sponte* issue a certificate of correction reflecting the amount of PTA days determined by the recalculation.

Prior to the issuance of the certificate of correction, the USPTO will afford patentee an opportunity to be heard and request reconsideration. Accordingly, patentee has **one month or thirty (30) days**, whichever is longer, to file a request for reconsideration of this patent term adjustment calculation. See 35 U.S.C. 154(b)(3)(B)(ii) and 37 CFR 1.322(a)(4). No extensions of time will be granted under 37 CFR 1.136.

Patentee should use document code PET.OP if electronically filing a request for reconsideration of this patent term adjustment calculation. The patentee must also include the information required by 37 CFR 1.705(b)(2) and the fee required by 37 CFR 1.18(e). If patentee does not file a timely request for reconsideration of this patent term adjustment calculation including the information required by 37 CFR 1.705(b)(2) and the fee required by 37 CFR 1.18(e), the USPTO will issue a certificate of correction reflecting the PTA determination noted above.

Patentee should be aware that in order to preserve the right to review in the United States District Court for the District of Columbia of the USPTO patent term adjustment determination, patentee must ensure that he or she also take the steps required under 35 U.S.C. 154(b)(4)(A) in a timely manner. Nothing in the request for recalculation should be construed as providing an alternative time frame for commencing a civil action under 35 U.S.C. 154(b)(4)(A).

Any questions concerning this decision should be directed to the Office of Patent Legal Administration at 571-272-7702.

UNITED STATES DEPARTMENT OF COMMERCE
Patent and Trademark Office
ASSISTANT SECRETARY OF COMMERCE AND
COMMISSIONER OF PATENTS AND TRADEMARKS
P.O. Box 1450
Alexandria, VA 22313-1450

June 25, 2010

Patent No.: 7,689,898 B2
Applicant : Jonathan Merril, et al.
Issued : March 30, 2010
For : **ENHANCED CAPTURE, MANAGEMENT AND DISTRIBUTION OF LIVE PRESENTATIONS**

Re: Request for Certificate of Correction

Consideration has been given your request for the issuance of a certificate of correction for the above-identified patent under the provisions of Rule 1.322.

Respecting the alleged error to delete the patent term paragraph and terminal disclaimer statement.The change should not be made since the alleged mistake is not clearly disclosed by the records of the office. Furthermore, if patentee is challenging the calculation of Patent Term Adjustment (PTA), the proper vehicle for such challenge is the filing of an application for PTA under 37 CFR 1.705(d). Finally, the request for certificate of correction will not be entered-in-part."

In view of the foregoing, your request for certificate of correction is hereby denied.

Further correspondence concerning this matter should be filed and directed to Decisions and Certificates of Correction Branch.

Decisions and Certificates of Correction
Antonio Johnson
(571)272-0483

BUCHANAN, INGERSOLL & ROONEY PC
POST OFFICE BOX 1404
ALEXANDRIA VA 22313-1404

AJ/cbn

UNITED STATES PATENT AND TRADEMARK OFFICE

Commissioner for Patents
United States Patent and Trademark Office
P.O. Box 1450
Alexandria, VA 22313-1450
www.uspto.gov

CALFEE HALTER & GRISWOLD, LLP
800 SUPERIOR AVENUE
SUITE 1400
CLEVELAND OH 44114

COPY MAILED
NOV 27 2006
OFFICE OF PETITIONS

In re Application of	:	
Fay Porter	:	
Application No. 11/580,133	:	DECISION ON PETITION
Filed: October 12, 2006	:	TO MAKE SPECIAL UNDER
Attorney Docket No. 3652	:	37 CFR 1.102(c)(1)
	:	

This is a decision on the petition under 37 CFR 1.102(c)(1), filed October 12, 2006, to make the above-identified application special based on applicant's age as set forth in M.P.E.P. § 708.02, Section IV.

The petition is **GRANTED**.

A grantable petition to make an application special under 37 CFR 1.102(c)(1) and MPEP § 708.02, Section IV: Applicant's Age must be accompanied by evidence showing that at least one of the applicants is 65 years of age, or more, such as a birth certificate or a statement by applicant. No fee is required

The instant petition includes a statement from the applicant's declaring that he is 65 years of age or older. Accordingly, the above-identified application has been accorded "special" status.

Telephone inquiries concerning this decision should be directed to Terri Williams at 571-272-2991.

All other inquiries concerning either the examination or status of the application should be directed to the Technology Center.

The application is being forwarded to the Technology Center Art Unit 3652 for action on the merits commensurate with this decision.

Terri Williams
Petitions Examiner
Office of Petitions

UNITED STATES PATENT AND TRADEMARK OFFICE

UNITED STATES DEPARTMENT OF COMMERCE
United States Patent and Trademark Office
Address: COMMISSIONER FOR PATENTS
P.O. Box 1450
Alexandria, Virginia 22313-1450
www.uspto.gov

APPLICATION NO.	FILING DATE	FIRST NAMED INVENTOR	ATTORNEY DOCKET NO.	CONFIRMATION NO.
11/580,160	10/13/2006	Fabien Wahl	297765US41	4812

7590 01/11/2010
OBLON, SPIVAK, MCCLELLAND MAIER & NEUSTADT, L.L.P.
1940 DUKE STREET
ALEXANDRIA, VA 22314

EXAMINER
BERTHEAUD, PETER JOHN

ART UNIT	PAPER NUMBER
3746	

NOTIFICATION DATE	DELIVERY MODE
01/11/2010	ELECTRONIC

DECISION GRANTING PETITION UNDER 37 CFR 1.138(d)

The declaration of express abandonment is recognized

This is in response to the petition under 37 CFR 1.138(d), requesting for a refund of any previously paid search fee and excess claims fee in the above-identified application.

The petition is granted.

The express abandonment is recognized. Any previously paid search fee and excess claims fee are hereby refunded.

Telephone inquiries should be directed to the Office of Data Management at (571) 272-4200.

Patent Publication Branch
Office of Data Management

Refund Ref: 01/11/2010 [illegible]

Credit Card Refund Total: $[illegible]

Adjustment date: 01/11/2010 NFARMER
10/16/2006 SSESHE1 00000022 11580160
02 FC:1111 -500.00 OP
04 FC:1203 -350.00 OP

FORM PET651G (Rev. 08/07)

UNITED STATES PATENT AND TRADEMARK OFFICE

UNITED STATES DEPARTMENT OF COMMERCE
United States Patent and Trademark Office
Address: COMMISSIONER FOR PATENTS
P.O. Box 1450
Alexandria, Virginia 22313-1450
www.uspto.gov

VENABLE LLP
P.O. BOX 34385
WASHINGTON, DC 20043-9998

Mail Date: 04/21/2010

Applicant	: Kyong Ha Lee	: DECISION ON REQUEST FOR
Patent Number	: 7573340	: RECALCULATION of PATENT
Issue Date	: 08/11/2009	: TERM ADJUSTMENT IN VIEW
Appliction No	: 11/580,188	: OF WYETH
Filed	: 10/13/2006	:
		:

The Patentee's Request for Recalculation is **DISMISSED.**

This Request is deemed ineligible for consideration for one or more of the following reasons:

(A). The patent for which PTA recalculation is requested is either a design or reissue application or is a reexamination proceeding;

(B). The patent for which PTA recalculation is requested resulted from a utility or plant application filed under 35 USC 111(a) before May 29, 2000 and no CPA filed in the application on/after May 29, 2000;

(C). The patent for which PTA recalculation is requested resulted from an international application in which the international filing date was before May 29, 2000 and no CPA filed in the application on/after May 29, 2000;

(D). The patent for which PTA recalculation is requested issued on/after March 2, 2010;

(E). The Request for Recalculation was filed more than 180 days after the grant date of the patent and the request was not filed within two months of a dismissal of a request for reconsideration of the of the patent term under 37 CFR 1.705(d);

(F). The Request for Recalculation is not solely limited to USPTO pre-Wyeth interpretation of 35 U.S.C. 154(b)(2)(A);

or

(G). A civil action was filed pursuant to 35 U.S.C. 154(b)(4)(A)concerning the same patent at issue in this request.

Patentee may file a reply to this decision dismissing the Request for Recalculation. Patentee must file such reply within one month or thirty days, whichever is longer, of the mail date of the decision dismissing the Request for Recalculation. No fee is required if patentee is asserting in the reply that the dismissal for ineligibility is improper.

Patentee should use document code PET.OP if electronically filing a reply to this dismissal. If the USPTO finds that the request was improperly deemed ineligible, the USPTO will mail applicant a recalculation determination.

Patentee should be aware that in order to preserve the right to review in the United States District Court for the District of Columbia of the USPTO patent term adjustment determination, patentee must ensure that he or she also take the steps required under 35 U.S.C. 154(b)(4)(A). Nothing in the request for recalculation should be construed as providing an alternative time frame for commencing a civil action under 35 U.S.C. 154 (b)(4)(A).

Any questions concerning this decision should be directed to the Office of Patent Legal Administration at 571-272-7702.

UNITED STATES PATENT AND TRADEMARK OFFICE

Commissioner for Patents
United States Patent and Trademark Office
P.O. Box 1450
Alexandria, VA 22313-1450
www.uspto.gov

CHOATE, HALL & STEWART, LLP
TWO INTERNATIONAL PLACE
BOSTON, MA 02110

COPY MAILED
NOV 06 2008

In re Application of	:	
Christie L. Hunter	:	
Application No. 11/580,221	:	DECISION ON PETITION
Filed: October 12, 2006	:	TO WITHDRAW
Attorney Docket No. 2007536.0069	:	FROM RECORD
	:	

This is a decision on the Request to Withdraw as attorney or agent of record under 37 C.F.R. § 1.36(b), filed April 7, 2008.

The request is **NOT APPROVED**.

A grantable request to withdraw as attorney/agent of record must be signed by every attorney/agent seeking to withdraw or contain a clear indication that one attorney is signing on behalf of another/others. A request to withdraw will not be approved unless at least 30 (thirty) days would remain between the date of approval and the later of the expiration date of a time to file a response or the expiration date of the maximum time period which can be extended under 37 C.F.R. § 1.136(a).

The request cannot be approved because no reasons for withdrawal have been provided. The Office cannot, at this time, determine whether practitioner's request is one of the mandatory or permissive reasons enumerated in 37 CFR 10.40. Any subsequent requests must include reasons for withdrawal. Please note that there is a space provided for on PTO/SB/83 (Request to Withdraw as Attorney or Agent) to supply practitioner's reasons.

In order to request or take action in a patent matter, the assignee must establish its ownership of the patent to the satisfaction of the Director. In this regard, a Statement under 37 CFR 3.73(b) must have either: (i) documentary evidence of a chain of title from the original owner to the assignee (*e.g.*, copy of an executed assignment), and a statement affirming that the documentary evidence of the chain of title from the original owner to the assignee was or concurrently is being submitted for recordation pursuant to § 3.11; or (ii) a statement specifying where documentary evidence of a chain of title from the original owner to the assignee is recorded in the assignment records of the Office (*e.g.*, reel and frame number). The power of attorney filed on June 12, 2008 does not include a 3.73(b) statement from both assignees.

All future communications from the Office will continue to be directed to the above-listed address until otherwise notified by applicant.

Telephone inquiries concerning this decision should be directed to undersigned at 571-272-1642.

/AMW/
April M. Wise
Petitions Examiner
Office of Petitions

cc: ANDREW KARNAKIS
APPLIED BIOSYSTEMS
500 OLD CONNECTICUT PATH
FRAMINGHAM, MA 01701

UNITED STATES PATENT AND TRADEMARK OFFICE

Commissioner for Patents
United States Patent and Trademark Office
P.O. Box 1450
Alexandria, VA 22313-1450
www.uspto.gov

VENABLE LLP
P.O. BOX 34385
WASHINGTON DC 20043-9998

COPY MAILED

SEP 1 0 2007

OFFICE OF PETITIONS

In re Application of	:	
Gruner, George	:	
Application No. 11/580,229	:	DECISION ON PETITION
Filed: October 13, 2006	:	TO MAKE SPECIAL UNDER
Attorney Docket No. **58086-236062**	:	37 CFR 1.102(c)(1)
	:	

This is a decision on the petition under 37 CFR 1.102(c)(1), filed July 05, 2007, to make the above-identified application special based on applicant's age as set forth in M.P.E.P. § 708.02, Section IV.

The petition is **GRANTED**.

A grantable petition to make an application special under 37 CFR 1.102(c)(1) and MPEP § 708.02, Section IV: Applicant's Age must be accompanied by evidence showing that at least one of the applicants is 65 years of age, or more, such as a birth certificate or a statement by applicant. No fee is required

The instant petition includes a copy of the inventor's driver's license as evidence that George Gruner is over 65 years of age. Accordingly, the above-identified application has been accorded "special" status.

Telephone inquiries concerning this decision should be directed to Michelle R. Eason at 571-272-4231.

All other inquiries concerning either the examination or status of the application should be directed to the Technology Center.

The application is being forwarded to the Technology Center Art Unit 1754 for action on the merits commensurate with this decision.

T. Williams

Terri Williams
Petitions Examiner
Office of Petitions

UNITED STATES PATENT AND TRADEMARK OFFICE

UNDER SECRETARY OF COMMERCE FOR INTELLECTUAL PROPERTY AND
DIRECTOR OF THE UNITED STATES PATENT AND TRADEMARK OFFICE
WASHINGTON, DC 20231
www.uspto.gov

JUL 2 3 2007

In re Application of George Gruner Serial Number: 11/580,243 Filed: October 13, 2006 For: METHOD OF PRODUCING DEVICE HAVING NANOSTRUCTURED THIN-FILM NETWORKS	DECISION ON PETITION UNDER M.P.E.P. 708.02(IV)

This is in response to the petition filed July 5, 2007, requesting that the above-identified application be granted Special Status under Section 708.02 (IV) of the MPEP and 37 CFR 1.102(c)

The petition has been considered and found to comply with the requirements set forth under the above-noted section. Accordingly, the petition is granted.

The petition is GRANTED.

William Krynski, Quality Assurance Specialist
Technology Center 1700
Chemical and Materials Engineering

UNITED STATES PATENT AND TRADEMARK OFFICE

UNDER SECRETARY OF COMMERCE FOR INTELLECTUAL PROPERTY AND
DIRECTOR OF THE UNITED STATES PATENT AND TRADEMARK OFFICE
WASHINGTON, DC 20231
www.uspto.gov

JUL 2 3 2007

In re Application of George Gruner Serial Number: 11/580,244 Filed: October 13, 2006 For: FABRIC HAVING NANOSTRUCTURED THIN-FILM NETWORKS	DECISION ON PETITION UNDER M.P.E.P. 708.02(IV)

This is in response to the petition filed July 5, 2007, requesting that the above-identified application be granted Special Status under Section 708.02 (IV) of the MPEP and 37 CFR 1.102(c)

The petition has been considered and found to comply with the requirements set forth under the above-noted section. Accordingly, the petition is granted.

The petition is GRANTED.

William Krynski, Quality Assurance Specialist
Technology Center 1700
Chemical and Materials Engineering

UNITED STATES PATENT AND TRADEMARK OFFICE

Commissioner for Patents
United States Patent and Trademark Office
P.O. Box 1450
Alexandria, VA 22313-1450
www.uspto.gov

ZUBER & TAILLIEU LLP
9TH FLOOR
9595 WILSHIRE BLVD.
BEVERLY HILLS CA 90212

COPY MAILED

SEP 27 2007

OFFICE OF PETITIONS

In re Application of
Stacey Caron
Application No. 11/580,249
Filed: October 12, 2006
Title: Automated Appraisal Fee Processing Software For Real Estate Transaction

ON PETITION

This is a decision on the petition under 37 CFR 1.181 to withdraw the holding of abandonment, filed August 10, 2007. Petitioner has also requested treatment under 37 CFR 1.137(a) in the alternative.

The petition under 37 CFR 1.181 to withdraw the holding of abandonment is **Dismissed**.

The petition under 37 CFR 1.137(a) is **Dismissed**.

Any request for reconsideration should be filed within **TWO MONTHS** of the mailing date of this decision in order to be considered timely. 37 CFR 1.181(f). This time period may not be extended pursuant to 37 CFR 1.136.

This above-identified application became abandoned for failure to file a response to a Notice to File Missing Parts of Nonprovisional Application which was mailed on November 1, 2006. The Notice to File Missing Parts set an extendable two (2) month period for reply. No timely request for extension of time was obtained under the provisions of 37 CFR §1.136(a). Accordingly, this application became abandoned on January 2, 2007. A Notice of Abandonment was mailed on July 3, 2007.

Petitioner maintains a reply to the Notice of Missing Parts was submitted on November 21, 2006. In addition to the reply to the Missing Parts, petitioner submitted assignment documents to be recorded in the assignment branch. All of the documents were sent

via express mail on November 21, 2006. Petitioner has provided USPS evidence (USPS Track and Confirm) which shows a package was accepted and sent to the USPTO on November 21, 2006. In support of petitioner's argument, declarations of Jennifer Clark and John Carr have been submitted.

Petitioner's evidence has been considered but deemed to be unpersuasive. Petitioner has submitted a copy of the reply to the Notice to File Missing Parts of Nonprovisional Application. A review of the assignment documents shows that only the signature page of the declaration was received in the Office. Thus an incomplete reply to the Notice was submitted. Further review shows that the reply to the Notice of Missing Parts did not include a certificate of mailing pursuant to 37 CFR 1.8.[1] Nor does review of the record show that a post card receipt within the meaning of MPEP 503[2] was submitted.

---

[1] Pursuant to 37 CFR 1.8(b):
In the event that correspondence is considered timely filed by being mailed or transmitted in accordance with paragraph (a) of this section, but not received in the U.S. Patent and Trademark Office after a reasonable amount of time has elapsed from the time of mailing or transmitting of the correspondence, or after the application is held to be abandoned, or after the proceeding is dismissed, terminated, or decided with prejudice, the correspondence will be considered timely if the party who forwarded such correspondence:
(1) Informs the Office of the previous mailing or transmission of the correspondence promptly after becoming aware that the Office has no evidence of receipt of the correspondence;
(2) Supplies an additional copy of the previously mailed or transmitted correspondence and certificate; and
(3) Includes a statement which attests on a personal knowledge basis or to the satisfaction of the Director to the previous timely mailing or transmission. If the correspondence was sent by facsimile transmission, a copy of the sending unit's report confirming transmission may be used to support this statement.
(c) The Office may require additional evidence to determine if the correspondence was timely filed.

[2] The USPTO will stamp the receipt date on the postcard and place it in the outgoing mail. A postcard receipt which itemizes and properly identifies the items which are being filed serves as prima facie evidence of receipt in the USPTO of all the items listed thereon on the date stamped thereon by the USPTO.
The identifying data on the postcard should be so complete as to clearly identify the item for which a receipt is requested. For example, the postcard should identify the applicant's name, application number (if known), confirmation number (if known), filing date, interference number, title of the invention, etc. The postcard should also identify the type of paper being filed, e.g., new application, affidavit, amendment, notice of appeal, appeal brief, drawings, fees, motions, supplemental oath or declaration, petition, etc., and the number of pages being submitted. If a new application is being filed, all parts of the application being submitted should be separately listed on the postcard, e.g., the number of pages of specification (including written description, claims and abstract), number of claims, number of sheets of drawings, number of pages of oath/declaration, number of pages of cover sheet (provisional application).
The postcard receipt will not serve as prima facie evidence of receipt of any item which is not adequately itemized on the postcard. For example, merely listing on the postcard "a complete application" or "patent application" will not serve as a proper receipt for each of the required components of an application (e.g., specification (including claims), drawings (if necessary), oath or declaration and the application filing fee) or missing portions (e.g., pages, sheets of drawings) of an application if one of the components or portion of a component is found to be missing by the USPTO. Each separate component should be specifically and properly itemized on the postcard. Furthermore, merely incorporating by

While a certificate of mailing is not required when mail is submitted via 37 CFR 1.10, petitioner is required to include the number of the Express Mail label on the papers or fees that constitute the correspondence prior to the original mailing by Express Mail. The copy of the reply to the Notice of Missing Parts supplied on petition does not include the Express Mail label number. Thus, petitioner is unable to establish that a complete reply to the Notice of Missing Parts was timely submitted. It is further noted the Office is not in receipt of the $65.00 late surcharge fee. The declarations presented do not overcome Office records and the lack of Express Mail Label number on the reply. While the Office was in receipt of an Express Mail package, petitioner is unable to establish to the satisfaction of the Director what was contained in the Express Mail package.

Petition to revive under 37 CFR 1.137(a)

A grantable petition under 37 C.F.R. § 1.137(a) must be accompanied by:

(1) the required reply,[3]

(2) the petition fee,

(3) a showing to the satisfaction of the Director that the entire delay in filing the required reply from the due date for the reply until the filing of a grantable petition pursuant to this paragraph was unavoidable, and

(4) a terminal disclaimer and fee if the application was filed on or before June 8, 1995 or if the application is a design application.

As to item (1), the Office is not in receipt of the $65.00 surcharge fee.

As to item, (3), the showing of record is not sufficient to establish to the satisfaction of the Director that the delay was unavoidable within the meaning of 37 CFR §1.137(a).

The Office may revive an abandoned application if the delay in responding to the relevant outstanding office requirement is shown to the satisfaction of the Commissioner to have been "unavoidable." See, 37 CFR § 1.137(a)(3). Decisions on reviving abandoned applications have adopted the reasonably prudent person standard in determining if the delay was unavoidable. Ex parte Pratt, 1887 Dec. Comm'r Pat. 31,

---

reference in the postcard receipt, the items listed in a transmittal letter will no serve as prima facie evidence of receipt of those items.

[3] In a nonprovisional application abandoned for failure to prosecute, the required reply may be met by the filing of a continuing application. In an application or patent, abandoned or lapsed for failure to pay the issue fee or any portion thereof, the required reply must be the payment of the issue fee or any outstanding balance thereof.

32-33 (Comm'r Pat. 1887) (the term "unavoidable" is applicable to ordinary human affairs, and requires no more greater care or diligence than is generally used and observed by prudent and careful men in relation to their most important business."); In re Mattullath, 38 App. D.C. 497, 514-15 (D.C. Cir. 1912); Ex parte Henrich, 1913 Dec. Comm'r Pat. 139, 141 (Comm'r Pat. 1913). In addition, decisions on revival are made on a "case by case basis, taking all the facts and circumstances into account." Smith v. Mossinghoff, 671 F.2d 533, 538, 213 USPQ 977, 982 (D.C. Cir. 1982). A petition to revive an application as unavoidably abandoned cannot be granted where petitioner has failed to meet his or her burden of establishing the cause of the unavoidable delay. Haines v. Quigg, 673 F. Supp. 314, 5 USPQ2D 1130 (N.D. Ind. 1987).

The showing of record is inadequate to establish unavoidable delay within the meaning of 35 U.S.C. § 133 and 37 CFR 1.137(a).[4] Specifically, an application is "unavoidably" abandoned only where petitioner, or counsel for petitioner, takes all action necessary for a proper response to the outstanding Office action, but through the intervention of unforeseen circumstances, such as failure of mail, telegraph, facsimile, or the negligence of otherwise reliable employees, the response is not timely received in the Office.[5]

A "reasonably prudent person" would file papers or fees in compliance with 37 CFR 1.8 or 1.10 to ensure their timely filing in the USPTO, as well as preserve adequate evidence of such filing. A delay caused by an applicant's failure to file papers or fees in compliance with 37 CFR 1.8 and 1.10 does not constitute "unavoidable" delay. Krahn v. Commissioner, 15 USPQ2d 1823, 1824 (E.D. Va 1990). The failure to include the Express Mail Label number on the reply to the Notice of Missing Parts as required by 37 CFR 1.10 is not unavoidable.

Accordingly, petitioner has failed to provide sufficient arguments that warrant the finding of unavoidable delay within the meaning of 37 CFR 1.137(a).

Petitioner may wish to file a petition under 37 CFR 1.137(b).

Further correspondence with respect to this matter should be addressed as follows:

By mail: Mail Stop Petition

---

[4]See MPEP 711(c)(III)(c)(2) for a discussion of the requirements for a showing of unavoidable delay.

[5]Ex parte Pratt, 1887 Dec. Comm'r Pat. 31 (Comm'r Pat. 1887).

Commissioner for Patents
P.O. Box 1450
Alexandria, VA 22313-1450

By facsimile: (571) 273-8300

By delivery service: (FedEx, UPS, DHL, etc.)
U.S. Patent and Trademark Office
Customer Service Window,
Randolph Building
401 Dulany Street
Alexandria, VA 22314

Telephone inquiries concerning this matter should be directed to the undersigned at (571) 272-3215.

Charlema R. Grant

Charlema R. Grant
Petitions Attorney
Office of Petitions

UNITED STATES PATENT AND TRADEMARK OFFICE

Commissioner for Patents
United States Patent and Trademark Office
P.O. Box 1450
Alexandria, VA 22313-1450
www.uspto.gov

ZUBER & TAILLIEU LLP
10866 WILSHIRE BLVD., SUITE 300
LOS ANGELES CA 90024

COPY MAILED

DEC 18 2007

OFFICE OF PETITIONS

In re Application of :
Stacey Caron :
Application No. 11/580,249 : ON PETITION
Filed: October 12, 2006 :
Attorney Docket No. 0786-1002 :

This is a decision on the petition under the unintentional provisions of 37 CFR 1.137(b), filed October 2, 2007, to revive the above-identified application.

The petition is **DISMISSED**.

Any request for reconsideration of this decision must be submitted within TWO (2) MONTHS from the mail date of this decision. Extensions of time under 37 CFR 1.136(a) are permitted. The reconsideration request should include a cover letter entitled "Renewed Petition under 37 CFR 1.137(b)." This is **not** a final agency action within the meaning of 5 U.S.C. § 704.

This above-identified application became abandoned for failure to file a response to a Notice to File Missing Parts of Nonprovisional Application which was mailed on November 1, 2006. The Notice to File Missing Parts set an extendable two (2) month period for reply. No timely request for extension of time was obtained under the provisions of 37 CFR §1.136(a). Accordingly, this application became abandoned on January 2, 2007. A Notice of Abandonment was mailed on July 3, 2007. Petitions under 37 CFR 1.181 and 1.137(a) were dismissed on September 27, 2007

A grantable petition under 37 CFR 1.137(b) must be accompanied by: (1) the required reply, unless previously filed; (2) the petition fee as set forth in 37 CFR 1.17(m); (3) a statement that the entire delay in filing the required reply from the due date for the reply until the filing of a grantable petition pursuant to 37 CFR 1.137(b) was unintentional; and (4) any terminal disclaimer (and fee as set forth in 37 CFR 1.20(d)) required by 37 CFR 1.137(d). Where there is a question as to whether either the abandonment or the delay in filing a petition under 37 CFR 1.137 was unintentional, the Director may require additional information. See MPEP 711.03(c)(II)(C) and (D). The instant petition lacks item(s) (1).

As to item (1), the Office is not in receipt of the $65.00 surcharge fee.

Further correspondence with respect to this matter should be addressed as follows:

By Mail: Mail Stop PETITION
Commissioner for Patents
P. O. Box 1450
Alexandria, VA 22313-1450

By hand: U. S. Patent and Trademark Office
Customer Service Window, Mail Stop Petitions
Randolph Building
401 Dulany Street
Alexandria, VA 22314

The centralized facsimile number is **(571) 273-8300.**

Telephone inquiries concerning this decision should be directed to the undersigned at (571) 272-3215.

Charlema Grant

Charlema Grant
Petitions Attorney
Office of Petitions

UNITED STATES PATENT AND TRADEMARK OFFICE

Commissioner for Patents
United States Patent and Trademark Office
P.O. Box 1450
Alexandria, VA 22313-1450
www.uspto.gov

ZUBER & TAILLIEU LLP
10866 WILSHIRE BLVD., SUITE 300
LOS ANGELES CA 90024

COPY MAILED

MAR 07 2008

OFFICE OF PETITIONS

In re Application of
Stacey Caron
Application No. 11/580,249
Filed: October 12, 2006
Attorney Docket No. 0786-1002

DECISION ON PETITION

This is a decision on the renewed petition under the unintentional provisions of 37 CFR 1.137(b), filed February 6, 2008, to revive the above-identified application.

The petition is **GRANTED**.

This above-identified application became abandoned for failure to file a response to a Notice to File Missing Parts of Nonprovisional Application, which was mailed on November 1, 2006. The Notice to File Missing Parts set an extendable two (2) month period for reply. No timely request for extension of time was obtained under the provisions of 37 CFR §1.136(a). Accordingly, this application became abandoned on January 2, 2007. A Notice of Abandonment was mailed on July 3, 2007. Petitions under 37 CFR 1.181 and 1.137(a) were dismissed on September 26, 2007. A petition under 37 CFR 1.137(b) was dismissed on December 18, 2007.

The petition satisfies the requirements of 37 CFR 1.137(b) in that petitioner has supplied (1) the reply in the form of a declaration and $65.00 surcharge, (2) the petition fee of $770.00, and (3) a proper statement of unintentional delay.

Telephone inquiries concerning this decision should be directed to the undersigned at (571) 272-3215.

This application is being referred to the Office of Patent Application processing for appropriate action in the normal course of business on the reply received

Charlema Grant

Charlema Grant
Petitions Attorney
Office of Petitions

UNITED STATES PATENT AND TRADEMARK OFFICE

Commissioner for Patents
United States Patent and Trademark Office
P.O. Box 1450
Alexandria, VA 22313-1450
www.uspto.gov

MAILED

APR 08 2010

OFFICE OF PETITIONS

Guice Patents PLLC
12647 Galveston Court #302
Manassas VA 20112

In re Application of

Yi Pin Wei

Application No. 11/580,298

Filed: October 13, 2006

Attorney Docket No. **4620-0013**

: DECISION ON PETITION

This is a decision on the petition under 37 CFR 1.137(b), filed January 30, 2010, to revive the above-identified application.

The petition is **GRANTED**.

The above-cited application became abandoned for failure to reply in a timely manner to the non-final Office action mailed October 1, 2008, which set a shortened statutory period for reply of three (3) months. No extensions of time were obtained within the allowable period. Accordingly, the application became abandoned on January 2, 2009. A Notice of Abandonment was mailed on June 9, 2009

The amendment filed April 1, 2009, is noted.

The application is being forwarded to Technology Center 3600, GAU 3611 for further processing.

Telephone inquiries concerning this decision should be directed to the undersigned at (571) 272-3222.

Kenya A. McLaughlin
Petitions Attorney
Office of Petitions

UNITED STATES PATENT AND TRADEMARK OFFICE

Commissioner for Patents
United States Patent and Trademark Office
P.O. Box 1450
Alexandria, VA 22313-1450
www.uspto.gov

MORGAN LEWIS & BOCKIUS LLP
1111 PENNSYLVANIA AVENUE NW
WASHINGTON, DC 20004

COPY MAILED

SEP 2 5 2009

OFFICE OF PETITIONS

In re Application of	:	
Wise et al.	:	
Application No. 11/580,303	:	ON PETITION
Filed: October 13, 2006	:	
Attorney Docket No. 061467-5006	:	

This is a decision on the petition under the unintentional provisions of 37 CFR 1.137(b), filed August 12, 2009, to revive the above-identified application.

There is no indication that the petition is signed by a registered patent attorney or patent agent of record. However, in accordance with 37 CFR 1.34, the signature of Mr. Stuart I. Smith appearing on the correspondence shall constitute a representation to the United States Patent and Trademark Office that he is authorized to represent the particular party in whose behalf he acts. The change of address filed herein cannot be accepted as it must be in accordance with MPEP 601.03. If, Mr. Smith desires to receive correspondence regarding this file, the appropriate power of attorney documents must be submitted. A courtesy copy of this decision is being mailed to Mr. Smith, the petitioner herein. However, until otherwise instructed, all future correspondence regarding this application file will be directed solely to the above-noted correspondence address of record.

The petition is **GRANTED**.

The application became abandoned for failure to reply in a timely manner to the Restriction Requirement, mailed December 31, 2008 , which set a shortened statutory period for reply of one (1) month or thirty (30) days (whichever is later). No extensions of time under the provisions of 37 CFR 1.136(a) were obtained. Accordingly, the application became abandoned on February 1, 2009. A Notice of Abandonment was mailed July 24, 2009.

It is not apparent whether the statement of unintentional delay was signed by a person who would have been in a position of knowing that the entire delay in filing the required reply from the due date for the reply until the filing of a grantable petition pursuant to 37 CFR 1.137(b) was unintentional. Nevertheless, in accordance with 37 CFR 10.18, the statement is accepted as constituting a certification of unintentional delay. However, in the event that petitioner has no knowledge that the delay was unintentional, petitioner must make such an inquiry to ascertain that, in fact, the delay was unintentional. If petitioner discovers that the delay was intentional, petitioner must notify the Office

The petition satisfies the requirements of 37 CFR 1.137(b) in that petitioner has supplied (1) the reply in the form of an election of the invention to be examined, (2) the petition fee of $810, and (3) an adequate statement of unintentional delay.

Telephone inquiries concerning this decision should be directed to Alicia Kelley at (571) 272-6059.

This matter is being referred to Technology Center 3679 for further examination on the merits.

/SDB/

Sherry D. Brinkley
Petitions Examiner
Office of Petitions

cc: STUART SMITH
PRASS LLP
2661 RIVA ROAD
BLDG. 1000, 31044
ANNAPOLIS, MD 21401

UNITED STATES PATENT AND TRADEMARK OFFICE

UNITED STATES DEPARTMENT OF COMMERCE
United States Patent and Trademark Office
Address: COMMISSIONER FOR PATENTS
P.O. Box 1450
Alexandria, Virginia 22313-1450
www.uspto.gov

APPLICATION NO.	FILING DATE	FIRST NAMED INVENTOR	ATTORNEY DOCKET NO.	CONFIRMATION NO.
11/580,305	10/13/2006	Keigo Mizutani	2635-392	3879

7590 07/30/2009
NIXON & VANDERHYE, PC
901 NORTH GLEBE ROAD, 11TH FLOOR
ARLINGTON, VA 22203

EXAMINER
SALZMAN, KOURTNEY R

ART UNIT	PAPER NUMBER
1795	

MAIL DATE	DELIVERY MODE
07/30/2009	PAPER

DECISION GRANTING PETITION UNDER 37 CFR 1.138(d)

The declaration of express abandonment is recognized

This is in response to the petition under 37 CFR 1.138(d), requesting for a refund of any previously paid search fee and excess claims fee in the above-identified application.

The petition is granted.

The express abandonment is recognized. Any previously paid search fee and excess claims fee are hereby refunded.

Telephone inquiries should be directed to the Office of Data Management at (571) 272-4200.

Patent Publication Branch
Office of Data Management

Adjustment date: 08/04/2009 BPOWELL
01/11/2007 MTERLEMI 00000017 11580305
01 FC:1202 -200.00 OP

FORM PET651G (Rev. 08/07)

Adjustment date: 08/04/2009 BPOWELL
01/03/2007 JADD01 00000056 11580305
02 FC:1111 -500.00 OP

UNITED STATES PATENT AND TRADEMARK OFFICE

Commissioner for Patents
United States Patent and Trademark Office
P.O. Box 1450
Alexandria, VA 22313-1450
www.uspto.gov

NIXON & VANDERHYE, PC
901 NORTH GLEBE ROAD, 11TH FLOOR
ARLINGTON VA 22203

MAILED

MAY 07 2009

OFFICE OF PETITIONS

In re Application of	:	
David Mansour	:	
Application No. 11/580,306	:	DECISION GRANTING PETITION
Filed: October 13, 2006	:	UNDER 37 CFR 1.313(c)(2)
Attorney Docket No. LSN-3886-14	:	

This is a decision on the petition under 37 CFR 1.313(c)(2), filed May 6, 2009, to withdraw the above-identified application from issue after payment of the issue fee.

The petition is **GRANTED**.

The above-identified application is withdrawn from issue for consideration of a submission under 37 CFR 1.114 (request for continued examination). *See* 37 CFR 1.313(c)(2).

Petitioner is advised that the issue fee paid on April 13, 2009 cannot be refunded. If, however, this application is again allowed, petitioner may request that it be applied towards the issue fee required by the new Notice of Allowance.[1]

Telephone inquiries should be directed to Terri Williams at (571) 272-2991.

This application is being referred to Technology Center AU 2821 for processing of the request for continued examination under 37 CFR 1.114 and for consideration of the concurrently filed information disclosure statement.

Terri Williams

Terri Williams
Petitions Examiner
Office of Petitions

---

[1] *The request to apply the issue fee to the new Notice may be satisfied by completing and returning the new Part B – Fee(s) Transmittal Form (along with any balance due at the time of submission). Petitioner is advised that the Issue Fee Transmittal Form* ***must*** *be completed and timely submitted to avoid abandonment of the application.*

UNITED STATES PATENT AND TRADEMARK OFFICE

Commissioner for Patents
United States Patent and Trademark Office
P.O. Box 1450
Alexandria, VA 22313-1450
www.uspto.gov

COPY MAILED

FEB 06 2007

OFFICE OF PETITIONS

MACMILLAN, SOBANSKI & TODD, LLC
ONE MARITIME PLAZA - FIFTH FLOOR
720 WATER STREET
TOLEDO, OH 43604

In re Application of	:	
Ortmann, et al.	:	
Application No. 11/580,319	:	DECISION GRANTING PETITION
Filed: October 12, 2006	:	
Attorney Docket No.	:	

This is a decision on the petition filed October 26, 2006, under 37 CFR 1.10(d) requesting that the above-cited application be accorded a filing date of October 12, 2006.

Petitioner alleges that the application was deposited with the Express Mail Service on October12, 2006. In support of the allegation, the petition is accompanied by a copy of the "Track and Confirm" communication from the United States Postal Service showing that Express Mail package EV655164328US was deposited with the United States Postal Service, Express Mail Service on October12, 2006. The tracking number cited is the same number found on the application transmittal sheet that accompanied the original application papers. The evidence is convincing that the application papers were deposited on October 12, 2006.

In view of the above, the petition is granted. The new filing date for the above-cited application is October 12, 2006.

The application file is being returned to the Office of Initial Patent Examination for further processing with a filing date of October 12, 2006, and for issuance of a filing receipt.

Any inquiries related to this decision should be directed to the undersigned at (571) 272-3222.

Kenya A. McLaughlin
Petitions Attorney
Office of Petitions

UNITED STATES PATENT AND TRADEMARK OFFICE

Commissioner for Patents
United States Patent and Trademark Office
P.O. Box 1450
Alexandria, VA 22313-1450
www.uspto.gov

Risto A. Rinne, Jr.
Complete Patenting Services
4525 Montgomery Drive
Suite 10
Santa Rosa, CA 95409-5358

COPY MAILED

SEP 15 2008

OFFICE OF PETITIONS

In re Application of	:	
Allan Alfred Voigt	:	
Application No. 11/580,333	:	DECISION ON PETITION
Filed: October 12, 2006	:	TO MAKE SPECIAL UNDER
Attorney Docket No. VOIGT-CHAIR	:	37 CFR 1.102(c)(1)
	:	

This is a decision on the petition under 37 CFR 1.102(c)(1), filed October 12, 2006, to make the above-identified application special based on applicant's age as set forth in M.P.E.P. § 708.02, Section IV.

The petition is **GRANTED**.

A grantable petition to make an application special under 37 CFR 1.102(c)(1) and MPEP § 708.02, Section IV: Applicant's Age must be accompanied by evidence showing that at least one of the applicants is 65 years of age, or more, such as a birth certificate or a statement by applicant. No fee is required

The instant petition includes a photocopy of applicant's passport and driver's license. Accordingly, the above-identified application has been accorded "special" status.

Telephone inquiries concerning this decision should be directed to Kimberly Inabinet at 571-272-4618.

All other inquiries concerning either the examination or status of the application should be directed to the Technology Center.

The application is being forwarded to the Technology Center Art Unit 3618 for action on the merits commensurate with this decision.

Kimberly Inabinet

Kimberly Inabinet
Petitions Examiner
Office of Petitions

UNITED STATES PATENT AND TRADEMARK OFFICE

UNITED STATES DEPARTMENT OF COMMERCE
United States Patent and Trademark Office
Address: COMMISSIONER FOR PATENTS
P.O. Box 1450
Alexandria, Virginia 22313-1450
www.uspto.gov

TOWNSEND AND TOWNSEND AND CREW, LLP
TWO EMBARCADERO CENTER
EIGHTH FLOOR
SAN FRANCISCO, CA 94111-3834

Mail Date: 04/21/2010

Applicant	: Mani Prasad Kancherla	: DECISION ON REQUEST FOR
Patent Number	: 7594093	: RECALCULATION of PATENT
Issue Date	: 09/22/2009	: TERM ADJUSTMENT IN VIEW
Appliction No	: 11/580,339	: OF WYETH AND NOTICE OF INTENT TO
Filed	: 10/12/2006	: ISSUE CERTIFICATE OF CORRECTION
		:

The Request for Recalculation is **GRANTED** to the extent indicated.

The patent term adjustment has been determined to be **258** days. The USPTO will *sua sponte* issue a certificate of correction reflecting the amount of PTA days determined by the recalculation.

Prior to the issuance of the certificate of correction, the USPTO will afford patentee an opportunity to be heard and request reconsideration. Accordingly, patentee has **one month or thirty (30) days**, whichever is longer, to file a request for reconsideration of this patent term adjustment calculation. See 35 U.S.C. 154(b)(3)(B)(ii) and 37 CFR 1.322(a)(4). No extensions of time will be granted under 37 CFR 1.136.

Patentee should use document code PET.OP if electronically filing a request for reconsideration of this patent term adjustment calculation. The patentee must also include the information required by 37 CFR 1.705(b)(2) and the fee required by 37 CFR 1.18(e). If patentee does not file a timely request for reconsideration of this patent term adjustment calculation including the information required by 37 CFR 1.705(b)(2) and the fee required by 37 CFR 1.18(e), the USPTO will issue a certificate of correction reflecting the PTA determination noted above.

Patentee should be aware that in order to preserve the right to review in the United States District Court for the District of Columbia of the USPTO patent term adjustment determination, patentee must ensure that he or she also take the steps required under 35 U.S.C. 154(b)(4)(A) in a timely manner. Nothing in the request for recalculation should be construed as providing an alternative time frame for commencing a civil action under 35 U.S.C. 154(b)(4)(A).

Any questions concerning this decision should be directed to the Office of Patent Legal Administration at 571-272-7702.

UNITED STATES PATENT AND TRADEMARK OFFICE

UNITED STATES DEPARTMENT OF COMMERCE
United States Patent and Trademark Office
Address: COMMISSIONER FOR PATENTS
P.O. Box 1450
Alexandria, Virginia 22313-1450
www.uspto.gov

TOWNSEND AND TOWNSEND AND CREW, LLP
TWO EMBARCADERO CENTER
EIGHTH FLOOR
SAN FRANCISCO, CA 94111-3834

Mail Date: 05/18/2010

Applicant : Mani Prasad Kancherla
Patent Number : 7594093
Issue Date : 09/22/2009
Application No : 11/580,339
Filed : 10/12/2006

: NOTICE CONCERNING IMPROPER
: CALCULATION OF PATENT TERM
: ADJUSTMENT BASED UPON USPTO
: IMPROPERLY MEASURING REDUCTION
: PERIOD UNDER 37 CFR 1.704(c)(10).

The United States Patent and Trademark Office (USPTO) discovered that in processing the recent recalculation decisions mailed in response to patentee's filed Request for Recalculation of Patent Term Adjustment in view of Wyeth, the USPTO improperly measured the reduction period for reductions under 37 CFR 1.704(c)(10). Pursuant to 37 CFR 1.704(c)(10), patentee's reduction begins on the date of filing the amendment under 37 CFR 1.312 ("1.312 amendment") or other related paper and ends on the date that the Office mails a response to the filing of the 1.312 amendment or other paper. It has been discovered that during the recalculation, the calculation failed to the limit the reduction to the mail date of the response to the 1.312 amendment or other paper. Accordingly, patentee's reductions were greater than warranted.

This notice **VACATES** the previous GRANTED request for recalculation and provides patentee with a revised GRANTED recalculation.

The patent term adjustment has been determined to be **315** days. The USPTO will *sua sponte* issue a certificate of correction reflecting the amount of patent term adjustment (PTA) days determined by the recalculation.

Prior to the issuance of the certificate of correction, the USPTO will afford patentee an opportunity to be heard and request reconsideration. Accordingly, patentee has **one month or thirty (30) days** from the mail date of this notice, whichever is longer, to file a request for reconsideration of this PTA calculation. See 35 U.S.C. § 154(b)(3)(B)(ii) and 37 CFR 1.322(a)(4).

Patentee should use document code PET.OP if electronically filing a request for reconsideration of this PTA calculation. The patentee must also include the information required by 37 CFR 1.705(b)(2), and the fee required by 37 CFR 1.18(e). If patentee does not file a timely request for reconsideration of this PTA calculation, including the information required by 37 CFR 1.705(b)(2) and the fee required by 37 CFR 1.18(e), the USPTO will issue a certificate of correction reflecting the PTA determination noted above.

Patentee should be aware that in order to preserve the right of review of the USPTO's PTA determination in the United States District Court for the District of Columbia, patentee must ensure that the steps required under 35 U.S.C. § 154 (b)(4) are taken in a timely manner. Nothing in the request for recalculation should be construed as providing an alternative time frame for commencing a civil action under 35 U.S.C. § 154(b)(4).

UNITED STATES PATENT AND TRADEMARK OFFICE

Commissioner for Patents
United States Patent and Trademark Office
P.O. Box 1450
Alexandria, VA 22313-1450
www.uspto.gov

Paper No.

BOZICEVIC, FIELD & FRANCIS LLP
1900 UNIVERSITY AVENUE
SUITE 200
EAST PALO ALTO CA 94303

MAILED

JUL 02 2010

OFFICE OF PETITIONS

NOTICE

In re Patent No. 7417131
Issue Date: 08/26/2008
Application Number: 11/580348
Filing or 371(c) Date: 10/13/2006
Attorney Docket Number: EURE-012

This is a notice regarding your request for acceptance of a fee deficiency submission under 37 CFR 1.28 filed on April 21, 2010.

The Office no longer investigates or rejects original or reissue patent under 37 CFR 1.56. **1098 Off. Gaz. Pat. Office 502 (January 3, 1989)**. Therefore, nothing in this Notice is intended to imply that an investigation was done.

Your fee deficiency submission under 37 CFR 1.28 is hereby **ACCEPTED**.

This application is no longer entitled to small entity status. Accordingly, all future fees paid in this application must be paid at the large entity rate.

The address in the petition is different than the correspondence address. A courtesy copy of this decision is being mailed to the address in the petition. All future correspondence, however, will be mailed solely to the address of record.

Inquiries related to this communication should be directed to the undersigned at (571) 272-3231.

D Wood

Douglas Wood
Attorney
Office of Petitions

Cc: PATTERSON & SHERIDAN, LLP
3040 POST OAK BLVD., STE 1500
HOUSTON TX 77056

UNITED STATES PATENT AND TRADEMARK OFFICE

Commissioner for Patents
United States Patent and Trademark Office
P.O. Box 1450
Alexandria, VA 22313-1450
www.uspto.gov

MCCRACKEN & FRANK LLP
311 S. WACKER DRIVE
SUITE 2500
CHICAGO IL 60606

MAILED

MAR 30 2010

OFFICE OF PETITIONS

In re Application of	:	
Sypniewski et al.	:	
Application No. 11/580,367	:	DECISION ON PETITION
Filed: October 13, 2006	:	
Attorney Docket No. 80270/40380	:	

This is a decision on the petition under the unintentional provisions of 37 CFR 1.137(b), filed January 28, 2010 and the Supplemental response filed March 5, 2010, to revive the above-identified application.

The petition is **GRANTED**.

This application became abandoned for failure to reply in a proper and timely manner to the final Office action mailed May 11, 2009. No extensions of time under the provisions of 37 CFR 1.136(a) were obtained. Accordingly, this application became abandoned on August 12, 2009.

The petition satisfies the requirements of 37 CFR 1.137(b) in that petitioner has supplied (1) the reply in the form of a Request for Continued Examination (RCE) and fee of $405.00 and the submission required by 37 CFR 1.1149 (submitted March 5, 2010); (2) the petition fee of $810.00; and (3) a proper statement of unintentional delay.

Currently, petitioner is no longer power of attorney in the above-identified application and while a courtesy copy of this decision is being mailed to the address given on the petition, the Office will mail all future correspondence solely to the address of record.

Telephone inquiries concerning this decision should be directed to the undersigned at (571) 272-7751.

This matter is being referred to Technology Center 2872 for processing of the Request for Continued Examination under 37 CFR 1.114 and the Amendment filed March 5, 2010.

Joan Olszewski
Petitions Examiner
Office of Petitions

cc: Michael A. Bondi
100 South Fifth Street, Ste. 2250
Minneapolis, MN 55402

UNITED STATES PATENT AND TRADEMARK OFFICE

Commissioner for Patents
United States Patent and Trademark Office
P.O. Box 1450
Alexandria, VA 22313-1450
www.uspto.gov

AT & T LEGAL DEPARTMENT - WS
ATTN: PATENT DOCKETING
ROOM 2A-207
ONE AT & T WAY
BEDMINSTER NJ 07921

COPY MAILED

JUN 1 5 2009

OFFICE OF PETITIONS

ON PETITION

In re Application of
Irwin Gerszberg et al.
Application No. 11/580,393
Filed: October 13, 2006
Attorney Docket No. **2004-0052 CON**

This is a decision on the petition filed May 8, 2009 under 37 CFR 1.137(b),[1] to revive the above-identified application.

The petition under 37 CFR 1.137 (b) is **GRANTED**.

This application became abandoned April 30, 2009 for failure to timely pay the issue fee on or before April 29, 2009. Accordingly, a Notice of Abandonment was mailed May 13, 2009 after the filing of the instant petition.

The issue fee in the amount of $1510.00, petition fee in the amount of $1620.00 and publication fee in the amount of $300 have been charged to the credit card provided. All other requirements of 37 CFR 1.137(b) having now been met, this matter is being referred to the Publishing Division to be processed into a patent.

Telephone inquiries concerning this matter may be directed to the undersigned Petitions Attorney at (571) 272-3212.

Patricia Faison-Ball
Senior Petitions Attorney
Office of Petitions

---

[1]Effective December 1, 1997, the provisions of 37 CFR 1.137(b) now provide that where the delay in reply was unintentional, a petition may be filed to revive an abandoned application or a lapsed patent pursuant to 37 CFR 1.137(b). A grantable petition filed under the provisions of 37 CFR 1.137(b) must be accompanied by:

(1) the required reply, unless previously filed. In a nonprovisional application abandoned for failure to prosecute, the required reply may be met by the filing of a continuing application. In a nonprovisional application filed on or after June 8, 1995, and abandoned for failure to prosecute, the required reply may also be met by the filing of a request for continued examination in compliance with § 1.114. In an application or patent, abandoned or lapsed for failure to pay the issue fee or any portion thereof, the required reply must be the payment of the issue fee or any outstanding balance thereof.

(2) the petition fee as set forth in 37 CFR 1.17(m);

(3) a statement that the entire delay in filing the required reply from the due date for the reply until the filing of a grantable petition pursuant to 37 CFR 1.137(b) was unintentional. The Commissioner may required additional information where there is a question whether the delay was unintentional; and

(4) any terminal disclaimer (and fee as set forth in 37 CFR 1.20(d)) required pursuant to 37 CFR 1.137(c)).

UNITED STATES PATENT AND TRADEMARK OFFICE

Commissioner for Patents
United States Patent and Trademark Office
P.O. Box 1450
Alexandria, VA 22313-1450
www.uspto.gov

THE DOW CHEMICAL COMPANY
INTELLECTUAL PROPERTY SECTION, P. O. BOX 1967
MIDLAND MI 48641-1967

COPY MAILED

OCT 12 2007

OFFICE OF PETITIONS

In re Application of :
Goubert, et al. :
Application No. 11/580,402 :
Filed: October 13, 2006 :
Attorney Docket No. 64885 :
For: REACTIVELY-COUPLED ARTICLES AND RELATED METHODS

ON PETITION

This is a decision on the petition under 37 CFR 1.137(b), filed July 25, 2007, to revive the above-identified application.

The petition under 37 CFR 1.137(b) is **GRANTED**.

This application became abandoned for failure to timely reply to the Notice to File Missing Parts of Application mailed October 31, 2006, which set a two month shortened statutory period for reply. No extensions of time having been obtained pursuant to 37 CFR 1.136(a) and no reply being received in the Office, this application became abandoned on January 1, 2007.

Applicants have submitted a proper reply to the October 31, 2006 Notice in the form of an executed declaration and $130.00 surcharge, a proper statement of the unintentional nature of the delay in responding to the October 31, 2006 Notice, and the $1,500.00 petition fee. Accordingly, the petition under 37 CFR 1.137(b) is granted.

The application file does not indicate a change of address has been filed in this case, although the address given on the petition differs from the address of record. A change of address should be filed in this case in accordance with MPEP 601.03. A courtesy copy of this decision is being mailed to the address noted on the petition. However, until otherwise instructed, all future correspondence regarding this application will be mailed solely to the address of record.

After the mailing of this decision, the file will be returned to the Office of Initial Patent Examination for further processing.

Telephone inquiries concerning this matter may be directed to the undersigned at (571) 272-3230.

Shirene Willis Brantley

Shirene Willis Brantley
Senior Petitions Attorney
Office of Petitions

CC: KEVIN R. HANSBRO
THE DOW CHEMICAL CO.
2030 DOW CENTER
MIDLAND, MI 48674

UNITED STATES PATENT AND TRADEMARK OFFICE

UNITED STATES DEPARTMENT OF COMMERCE
United States Patent and Trademark Office
Address: COMMISSIONER FOR PATENTS
P.O. Box 1450
Alexandria, Virginia 22313-1450
www.uspto.gov

GARDERE WYNNE SEWELL LLP
INTELLECTUAL PROPERTY SECTION
3000 THANKSGIVING TOWER
1601 ELM ST
DALLAS, TX 75201-4761

Mail Date: 04/21/2010

Applicant	: Myron Eagle	: DECISION ON REQUEST FOR
Patent Number	: 7574744	: RECALCULATION of PATENT
Issue Date	: 08/11/2009	: TERM ADJUSTMENT IN VIEW
Appliction No	: 11/580,411	: OF WYETH AND NOTICE OF INTENT TO
Filed	: 10/13/2006	: ISSUE CERTIFICATE OF CORRECTION
		:

The Request for Recalculation is **GRANTED** to the extent indicated.

The patent term adjustment has been determined to be **272** days. The USPTO will *sua sponte* issue a certificate of correction reflecting the amount of PTA days determined by the recalculation.

Prior to the issuance of the certificate of correction, the USPTO will afford patentee an opportunity to be heard and request reconsideration. Accordingly, patentee has **one month or thirty (30) days**, whichever is longer, to file a request for reconsideration of this patent term adjustment calculation. See 35 U.S.C. 154(b)(3)(B)(ii) and 37 CFR 1.322(a)(4). No extensions of time will be granted under 37 CFR 1.136.

Patentee should use document code PET.OP if electronically filing a request for reconsideration of this patent term adjustment calculation. The patentee must also include the information required by 37 CFR 1.705(b)(2) and the fee required by 37 CFR 1.18(e). If patentee does not file a timely request for reconsideration of this patent term adjustment calculation including the information required by 37 CFR 1.705(b)(2) and the fee required by 37 CFR 1.18(e), the USPTO will issue a certificate of correction reflecting the PTA determination noted above.

Patentee should be aware that in order to preserve the right to review in the United States District Court for the District of Columbia of the USPTO patent term adjustment determination, patentee must ensure that he or she also take the steps required under 35 U.S.C. 154(b)(4)(A) in a timely manner. Nothing in the request for recalculation should be construed as providing an alternative time frame for commencing a civil action under 35 U.S.C. 154(b)(4)(A).

Any questions concerning this decision should be directed to the Office of Patent Legal Administration at 571-272-7702.

UNITED STATES PATENT
AND TRADEMARK OFFICE

Commissioner for Patents
United States Patent and Trademark Office
P.O. Box 1450
Alexandria, VA 22313-1450
www.uspto.g

Date Mailed: October 13, 2009
Patent No. :7,533,288 B2
Ser. No. :11/580415
Issued : May 12, 2009
Inventor(s) : Keisuke Hatasaki, et al.
Title :METHOD OF ACHIEVING HIGH RELIABILITY OF NETWORK BOOT COMPUTER SYSTEM

Request for Certificate of Correction

Consideration has been given your request for the issuance of a certificate of correction for the above-identified patent under the provisions of Rule(s) 1.322 and/or 1.323.

Assignees' names and addresses (assignment data, attorney agent/firm) printed in a patent, are based *solely* on information supplied in the appropriate space for identifying the assignment data, i.e., item 3 of the Issue Fee Transmittal Form PTOL-85B. Granting of a request under 37 CFR 3.81(b) is required to correct applicant's error providing ***incorrect or erroneous*** assignment data, *before* issuance of a Certificate of Correction, under 37 CFR 1.323 *(see Manual of Patent Examining Procedures (M.P.E.P) Chp.1400, sect. 1481).* This procedure is required *at any time after the issue fee is paid*, including after issuance of the patent.

In view of the foregoing, your request is hereby denied.

A request to correct the Assignee under 37 CFR 3.81(b) should include:

A. **the processing fee set forth in 37 CFR 1.117(h) (currently $130);**
B. a statement that the failure to include the correct assignee name on the PTOL-85B was inadvertent; and
C. a copy of the Notice of Recordation of Assignment Document, reflecting the reel and frame number where the assignment(s) is recorded and/or reflecting proof of *the date* the assignment was submitted for recordation.

In the Request, Applicant(s) may request that the file be forwarded to Certificates of Correction Branch, for issuance of a Certificate of Correction, if the Request is granted.

Any request under 37 CFR 3.81(b) should be directed to the following address or facsimile number:

By mail: Mail Stop PETITIONS
Commissioner for Patents
Post Office Box 1450
Alexandria, VA 22313-1450

By hand: Customer Service Window
Mail Stop Petitions
Randolph Building
401 Dulany Street
Alexandria, VA 22314

By fax: (571) 273-0025
ATTN: Office of Petitions

If a fee (currently $100) was previously submitted for consideration of a Request for Certificate of Correction, under CFR 1.323, to correct assignment data, no additional fee is required.

Magdalene Talley
For Mary F. Diggs, Supervisor
Decisions & Certificates
of Correction Branch
(571) 272-0423

Townsend and Townsebnd and Crew LLP
Two Embarcadero Center 8th Flr.
San Francisco, CA 94111-3834

MD/mt

UNITED STATES PATENT
AND TRADEMARK OFFICE

Commissioner for Patents
United States Patent and Trademark Office
P.O. Box 1450
Alexandria, VA 22313-1450
www.uspto.g

Date Mailed: October 13, 2009
Patent No. :7,533,288 B2
Ser. No. :11/580415
Issued : May 12, 2009
Inventor(s) : Keisuke Hatasaki, et al.
Title :METHOD OF ACHIEVING HIGH RELIABILITY OF NETWORK BOOT COMPUTER SYSTEM

Request for Certificate of Correction

Consideration has been given your request for the issuance of a certificate of correction for the above-identified patent under the provisions of Rule(s) 1.322 and/or 1.323.

Assignees' names and addresses (assignment data, attorney agent/firm) printed in a patent, are based *solely* on information supplied in the appropriate space for identifying the assignment data, i.e., item 3 of the Issue Fee Transmittal Form PTOL-85B. Granting of a request under 37 CFR 3.81(b) is required to correct applicant's error providing ***incorrect or erroneous*** assignment data, *before* issuance of a Certificate of Correction, under 37 CFR 1.323 *(see Manual of Patent Examining Procedures (M.P.E.P) Chp.1400, sect. 1481).* This procedure is required *at any time after the issue fee is paid*, including after issuance of the patent.

In view of the foregoing, your request is hereby denied.

A request to correct the Assignee under 37 CFR 3.81(b) should include:

A. **the processing fee set forth in 37 CFR 1.117(h) (currently $130);**
B. a statement that the failure to include the correct assignee name on the PTOL-85B was inadvertent; and
C. a copy of the Notice of Recordation of Assignment Document, reflecting the reel and frame number where the assignment(s) is recorded and/or reflecting proof of *the date* the assignment was submitted for recordation.

In the Request, Applicant(s) may request that the file be forwarded to Certificates of Correction Branch, for issuance of a Certificate of Correction, if the Request is granted.

Any request under 37 CFR 3.81(b) should be directed to the following address or facsimile number:

By mail: Mail Stop PETITIONS
Commissioner for Patents
Post Office Box 1450
Alexandria, VA 22313-1450

By hand: Customer Service Window
Mail Stop Petitions
Randolph Building
401 Dulany Street
Alexandria, VA 22314

By fax: (571) 273-0025
ATTN: Office of Petitions

If a fee (currently $100) was previously submitted for consideration of a Request for Certificate of Correction, under CFR 1.323, to correct assignment data, no additional fee is required.

Magdalene Talley
For Mary F. Diggs, Supervisor
Decisions & Certificates
of Correction Branch
(571) 272-0423

Townsend and Townsebnd and Crew LLP
Two Embarcadero Center 8th Flr.
San Francisco, CA 94111-3834

MD/mt

UNITED STATES PATENT
AND TRADEMARK OFFICE

Commissioner for Patents
United States Patent and Trademark Office
P.O. Box 1450
Alexandria, VA 22313-1450
www.uspto.g

Date Mailed: August 12, 2009
Patent No. :7,533,288 B2
Ser. No. :~~11/727037~~ **11/580,415**
Issued : May 12, 2009
Inventor(s) :Keisuke Hatasaki, et al.
Title :METHOD OF ACHIEVING HIGH RELIABILITY OF NETWORK BOOT COMPUTER SYSTEM

Request for Certificate of Correction

Consideration has been given your request for the issuance of a certificate of correction for the above-identified patent under the provisions of Rule(s) 1.322 and/or 1.323.

Assignees' names and addresses (assignment data, attorney agent/firm) printed in a patent, are based *solely* on information supplied in the appropriate space for identifying the assignment data, i.e., item 3 of the Issue Fee Transmittal Form PTOL-85B. Granting of a request under 37 CFR 3.81(b) is required to correct applicant's error providing ***incorrect or erroneous*** assignment data, *before* issuance of a Certificate of Correction, under 37 CFR 1.323 *(see Manual of Patent Examining Procedures (M.P.E.P) Chp.1400, sect. 1481).* This procedure is required *at any time after the issue fee is paid*, including after issuance of the patent.

In view of the foregoing, your request is hereby denied.

A request to correct the Assignee under 37 CFR 3.81(b) should include:

A. **the processing fee set forth in 37 CFR 1.117(h) (currently $130);**
B. a statement that the failure to include the correct assignee name on the PTOL-85B was inadvertent; and
C. a copy of the Notice of Recordation of Assignment Document, reflecting the reel and frame number where the assignment(s) is recorded and/or reflecting proof of *the date* the assignment was submitted for recordation.

In the Request, Applicant(s) may request that the file be forwarded to Certificates of Correction Branch, for issuance of a Certificate of Correction, if the Request is granted.

Any request under 37 CFR 3.81(b) should be directed to the following address or facsimile number:

By mail: Mail Stop PETITIONS
Commissioner for Patents
Post Office Box 1450
Alexandria, VA 22313-1450

By hand: Customer Service Window
Mail Stop Petitions
Randolph Building
401 Dulany Street
Alexandria, VA 22314

By fax: (571) 273-0025
ATTN: Office of Petitions

If a fee (currently $100) was previously submitted for consideration of a Request for Certificate of Correction, under CFR 1.323, to correct assignment data, no additional fee is required.

Magdalene Talley
For Mary F. Diggs, Supervisor
Decisions & Certificates
of Correction Branch
(703) 756-1540

Townsend & Townsend and Crew LLP
Two Embarcadero Center, 8th Floor
San Francisco, CA 94111-3834

MD/mt

UNITED STATES PATENT AND TRADEMARK OFFICE

Commissioner for Patents
United States Patent and Trademark Office
P.O. Box 1450
Alexandria, VA 22313-1450
www.uspto.gov

9/1/09

Patent No. :7547468
Ser. No. :11/580428
Inventor(s) :Junji Miyashita
Issued : 6/16/09
Title : OPTICAL FILM AND LIGHTING DEVICE USING THE OPTICAL FILM
Docket No. :

Re: Request for Certificate of Correction

Consideration has been given your request for the issuance of a certificate of correction for the above-identified patent under the provisions of Rule(s) 1.322 and/or 1.323.

Assignees' names and addresses (assignment data) printed in a patent, are based *solely* on information supplied in the appropriate space for identifying the assignment data, i.e., item 3 of the Issue Fee Transmittal Form PTOL-85B. Granting of a request under 37 CFR 3.81(b) is required to correct applicant's error providing ***incorrect or erroneous*** assignment data, *before* issuance of a Certificate of Correction, under 37 CFR 1.323 *(see Manual of Patent Examining Procedures (M.P.E.P) Chp.1400, sect. 1481).* This procedure is required *at any time after the issue fee is paid*, including after issuance of the patent.

In view of the foregoing, your request, in this mater, is hereby denied.

A request to correct the Assignee under 37 CFR 3.81(b) should include:

A. **the processing fee set forth in 37 CFR 1.117(h) (currently $130);**
B. a statement that the failure to include the correct assignee name on the PTOL-85B was inadvertent; and
C. a copy of the Notice of Recordation of Assignment Document, reflecting the reel and frame number where the assignment(s) is recorded and/or reflecting proof of *the date* the assignment was submitted for recordation.

In the Request, Applicant(s) may request that the file be forwarded to Certificates of Correction Branch, for issuance of a Certificate of Correction, if the Request is granted.

Any request under 37 CFR 3.81(b) should be directed to the following address or facsimile number:

By mail: Mail Stop PETITIONS
Commissioner for Patents
Post Office Box 1450
Alexandria, VA 22313-1450

By hand: Customer Service Window
Mail Stop Petitions
Randolph Building
40l Dulany Street
Alexandria, VA 22314

By fax: (703) 872-9306
ATTN: Office of Petitions

If a fee (currently $100) was previously submitted for consideration of a Request for Certificate of Correction, under CFR 1.323, to correct assignment data, , no additional fee is required.

A certificate of correction will be issued to correct the remaining errors noted in your request.

Henry Randall
Decisions & Certificates
of Correction Branch
(703) 756-1571

SCOTT A. TIMMERMAN
BRINKS HOFER GILSON & LIONE
P.O. BOX 10395
CHICAGO, IL 60610

HR

UNITED STATES PATENT AND TRADEMARK OFFICE

Commissioner for Patents
United States Patent and Trademark Office
P.O. Box 1450
Alexandria, VA 22313-1450
www.uspto.gov

BRINKS HOFER GILSON & LIONE
P.O. BOX 10395
CHICAGO, IL 60610

COPY MAILED

DEC 2 2 2009

OFFICE OF PETITIONS

In re Patent No. 7,547,468	:	
Issue Date: June 16, 2009	:	
Application No. 11/580,428	:	ON PETITION
Filed: October 13, 2006	:	
Attorney Docket No. 12820/30	:	

This is a decision on the petition filed October 6, 2009, which is being treated as a request under 37 CFR 3.81(b)[1] to correct the name of the assignee on the front page of the above-identified patent by way of a Certificate of Correction.

The request is **GRANTED**.

Telephone inquiries concerning this decision may be directed to the undersigned at (571) 272-3204. Inquiries regarding the issuance of a certificate of correction should be directed to the Certificates of Correction Branch at (571) 272-4200.

The Certificates of Correction Branch will be notified of this decision granting the petition under 37 CFR 3.81(b) and directing issuance of the requested Certificate of Correction.

Sherry D. Brinkley
Petitions Examiner
Office of Petitions

[1] *See* MPEP 1309, subsection II; and Official Gazette of June 22, 2004.

UNITED STATES PATENT AND TRADEMARK OFFICE

COMMISSIONER FOR PATENTS
UNITED STATES PATENT AND TRADEMARK OFFICE
P.O. BOX 1450
ALEXANDRIA, VA 22313-1450
www.uspto.gov

BRINKS HOFER GILSON & LIONE
P.O. BOX 10395
CHICAGO IL 60610

MAILED

JUN 22 2010

OFFICE OF PETITIONS

In re Patent No. 7,547,468	:	
Issue Date: 06/16/2009	:	
Application No. 11/580,428	:	DECISION ON PETITION
Filed: 10/13/2006	:	
Attorney Docket No. 12820/30	:	

This is a decision on the "37 CFR 1.182 PETITION FOR ADDITIONAL LETTERS PATENT" filed March 10, 2010.

The petition is **DISMISSED**.

In the present petition, petitioners are seeking duplicate Letters Patent for the above-identified patent because of the presence of two assignees in this case, Citizen Electronics Co. and Hitachi Chemical Company, Ltd. Petitioners state that both assignees are requesting an official Letters Patent.

The Office notes that the USPTO issues one original Letters Patent. Duplicate Letters Patent may be obtained where the original Letters Patent is not received from the USPTO or has been lost or destroyed. However, duplicate Letters Patent cannot be obtained because an assignee desires an additional official Letters Patent. As the original Letters Patent was received from the USPTO, and was not lost or destroyed, in this instance, a petition under 37 CFR 1.182 to obtain duplicate Letters Patent cannot be granted.

A presentation copy of the patent may be purchased through the USPTO Website or by calling Office of Public Records Customer Service Line at 1-800-972-6382 or 571-272-3150.

Further correspondence with respect to this matter should be directed as follows:

By mail: Mail Stop PETITIONS
Commissioner for Patents
Post Office Box 1450
Alexandria, VA 22313-1450

By hand: Customer Service Window
Mail Stop Petitions
Randolph Building
401 Dulany Street
Alexandria, VA 22314

By fax: (571) 273-8300
ATTN: Office of Petitions

Correspondence may also be submitted electronically via EFS-Web.

Any questions concerning this matter may be directed to the undersigned at (571) 272-3211.

C. T. Donnell

Christina Tartera Donnell
Senior Petitions Attorney
Office of Petitions

UNITED STATES PATENT AND TRADEMARK OFFICE

Commissioner for Patents
United States Patent and Trademark Office
P.O. Box 1450
Alexandria, VA 22313-1450
www.uspto.gov

BUHLER ASSOCIATES
BUHLER, KIRK A.
1101 CALIFORNIA AVE.
SUITE 208
CORONA CA 92881

MAILED

JUN 01 2010

OFFICE OF PETITIONS

In re Application of :
Sloat :
Application No. 11/580,429 : DECISION ON PETITION
Filed: October 13, 2006 :
Attorney Docket No. CS01-01U :
For: LOCKING BARREL CADDIE

This is a decision on the petition under the unavoidable standard of 37 CFR 1.137(a), filed April 7, 2010, to revive the above-identified application.

The petition is **DISMISSED.**

Any reconsideration petition must be submitted within TWO (2) MONTHS from the mail date of this decision. Extensions of time under 37 CFR 1.136(a) are permitted. The reconsideration request should include a cover letter entitled "Renewed Petition under 37 CFR 1.137(a)." This is **not** a final agency action within the meaning of 5 U.S.C.§ 704.

The above-identified application became abandoned on September 25, 2009 for failure to properly reply to the final Office action, mailed June 24, 2009. Applicant filed an amendment on August 24, 2009 that failed to place the application in *prima facie* condition for allowance, as was explained in the September 10, 2009 Advisory action. On September 17, 2009, applicant filed a request for continued examination (RCE) fee and an amendment that failed to place the application in *prima facie* condition for allowance, as was explained in the March 5, 2010 Advisory action. On March 23, 2010, applicant filed a RCE with a request for the examiner to consider the amendment previously filed on August 24, 2009 as the required submission. On March 31, 2010, the Office mailed a Notice of Abandonment.

A grantable petition under 37 CFR 1.137(a) must be accompanied by: (1) the required reply, unless previously filed; (2) the petition fee as set forth in 37 CFR 1.17(l); (3) a showing to the satisfaction of the Director that the entire delay in filing the required reply from the due date for the reply until the filing of a grantable petition pursuant to 37 CFR 1.137(a) was unavoidable; and (4) any terminal disclaimer (and fee as set forth in 37 CFR 1.20(d)) required pursuant to 37 CFR 1.137(d).

The instant petition lacks item (3).

With respect to (3) above, decisions on reviving abandoned applications on the basis of "unavoidable" delay have adopted the reasonably prudent person standard in determining if the delay was unavoidable:

> The word 'unavoidable' . . . is applicable to ordinary human affairs, and requires no more or greater care or diligence than is generally used and observed by prudent and careful men in relation to their most important business. It permits them in the exercise of this care to rely upon the ordinary and trustworthy agencies of mail and telegraph, worthy and reliable employees, and such other means and instrumentalities as are usually employed in such important business. If unexpectedly, or through the unforeseen fault or imperfection of these agencies and instrumentalities, there occurs a failure, it may properly be said to be unavoidable, all other conditions of promptness in its rectification being present.

In re Mattullath, 38 App. D.C. 497, 514-15 (1912)(quoting Ex parte Pratt, 1887 Dec. Comm'r Pat. 31, 32-33 (1887)); see also Winkler v. Ladd, 221 F. Supp. 550, 552, 138 USPQ 666, 167-68 (D.D.C. 1963), aff'd, 143 USPQ 172 (D.C. Cir. 1963); Ex parte Henrich, 1913 Dec. Comm'r Pat. 139, 141 (1913). In addition, decisions on revival are made on a "case-by-case basis, taking all the facts and circumstances into account." Smith v. Mossinghoff, 671 F.2d 533, 538, 213 USPQ 977, 982 (D.C. Cir. 1982). Finally, a petition cannot be granted where a petitioner has failed to meet his or her burden of establishing that the delay was "unavoidable." Haines v. Quigg, 673 F. Supp. 314, 316-17, 5 USPQ2d 1130, 1131-32 (N.D. Ind. 1987).

In the instant case, petitioner has failed to provide adequate evidence that the delay was unavoidable.

Petitioner is reminded that after a final action, there are only five possible replies: (1) a Notice of Appeal, (2) the filing of a continuing application, (3) a 37 CFR 1.129(a) submission, if appropriate, (4) an amendment after final that makes the case ready for issuance or (4) an RCE. To be a proper reply, an amendment after final must eliminate all of the Examiner's objections and rejections, and thus place the case in *prima facie* condition for allowance.

Petitioner's amendments after final, filed August 24, 2009 and September 17, 2009, respectively, failed to eliminate all of the Examiner's rejections, as explained in the Advisory actions. The rules of practice are clear that prosecution of an application to save it from abandonment must include such complete and proper action as the condition of the case may require. The admission of an amendment not responsive to the last Office action, or refusal to admit the same, shall not operate to save the application from abandonment. "[T]he admission of, or refusal to admit, any amendment after final rejection, and any proceedings relative thereto, shall not operate to relieve the application or patent under reexamination from its condition as subject to appeal or to save the application from abandonment under § 1.135." See 37 CFR 1.116(a).

The application became abandoned because petitioner submitted improper replies to the final Office action.

Petitioner has not established that a RCE was filed on September 17, 2009. A "reasonably prudent person" would file papers or fees in compliance with 37 CFR 1.8 or 1.10 to ensure their timely filing in the USPTO, as well as preserve adequate evidence of such filing. Therefore, a delay caused by an applicant's failure to file papers or fees in compliance with 37 CFR 1.8 and 1.10 does not constitute "unavoidable" delay. *See* Krahn v. Commissioner, 15 USPQ2d 1823, 1825, (E.D. Va 1990); *see also* MPEP 711.03(c)(III)(C)(2).

Filing a RCE fee is not the equivalent of filing a RCE. A delay resulting from the lack of knowledge or improper application of the patent statute, rules of practice or the MPEP does not constitute an "unavoidable" delay. See Haines v. Quigg, 673 F. Supp. 314, 317, 5 USPQ2d 1130, 1132 (N.D. Ind. 1987), Vincent v. Mossinghoff, 230 USPQ 621, 624 (D.D.C. 1985); Smith v. Diamond, 209 USPQ 1091 (D.D.C. 1981); Potter v. Dann, 201 USPQ 574 (D.D.C. 1978); Ex parte Murray, 1891 Dec. Comm'r Pat. 130, 131 (1891).

The petition under 37 CFR 1.137(a) is dismissed.

The undersigned suggests that petitioner file a petition stating that the delay was unintentional. Public Law 97-247, § 3, 96 Stat. 317 (1982), which revised patent and trademark fees, amended 35 U.S.C. § 41(a)(7) to provide for the revival of an "unintentionally" abandoned application without a showing that the delay in prosecution or in late payment of the issue fee was "unavoidable." This amendment to 35 U.S.C. § 41(a)(7) has been implemented in 37 CFR 1.137(b).

The filing of a petition under 37 CFR 1.137(b) cannot be intentionally delayed and therefore must be filed promptly. A person seeking revival due to unintentional delay cannot make a statement that the delay was unintentional unless the entire delay, including the date it was discovered that the application was abandoned until the filing of the petition to revive under 37 CFR 1.137(b), was unintentional. A statement that the delay was unintentional is not appropriate if petitioner intentionally delayed the filing of a petition for revival under 37 CFR 1.137(b).

Regarding fees, only one $405.00 RCE fee has been charged and the petition fee is required by statute and will not be refunded.

Further correspondence with respect to this matter should be addressed as follows:

By mail: Mail Stop Petition
Commissioner for Patents
P.O. Box 1450
Alexandria, VA 22313-1450

By FAX: (571) 273-8300
Attn: Office of Petitions

By hand: Customer Service Window
Randolph Building
401 Dulany Street
Alexandria, VA 22314

By internet: EFS-Web
www.uspto.gov/ebc/efs_help.html
(for help using EFS-Web call the
Patent Electronic Business Center
at (866) 217-9197)

Telephone inquiries concerning this decision should be directed to the undersigned at (571) 272-3230.

Shirene Willis Brantley

Shirene Willis Brantley
Senior Petitions Attorney
Office of Petitions

UNITED STATES PATENT AND TRADEMARK OFFICE

Commissioner for Patents
United States Patent and Trademark Office
P.O. Box 1450
Alexandria, VA 22313-1450
www.uspto.gov

COPY MAILED

DEC 0 4 2009

OFFICE OF PETITIONS

HEWLETT-PACKARD COMPANY
INTELLECTUAL PROPERTY ADMINISTRATION
3404 E. HARMONY ROAD
MAIL STOP 35
FORT COLLINS, CO 80528

In re Application of Steven V. Britt, et al. Application No. 11/580,449 Filed: October 13, 2006 Attorney Docket No. 200505974-1	: : : : :	ON PETITION

This is a decision on the petition under 37 CFR 1.137(b) to revive the above-identified application, filed September 18, 2009.

The petition is **GRANTED**.

The application became abandoned for failure to timely pay the issue and publication fees on or before August 5, 2009, as required by the Notice of Allowance and Fee(s) Due, mailed May 5, 2009, which set a statutory period for reply of three (3) months. Accordingly, the application became abandoned on August 6, 2009. A Notice of Abandonment was mailed on September 9, 2009. On September 18, 2009 the present petition was filed.

The petition satisfies the requirements of 37 CFR 1.137(b) in that petitioner has supplied (1) the reply in the form of the $1,510 issue fee and $300 publication fee; (2) the petition fee of $1,620; and (3) an adequate statement of unintentional delay.

The application is being referred to the Office of Data Management to be processed into a patent.

Telephone inquires related to this decision should be directed to the undersigned at (571) 272-3204. Telephone inquiries related to processing as a patent should be directed to (571) 272-4200.

Sherry D. Brinkley
Petitions Examiner
Office of Petitions

UNITED STATES PATENT AND TRADEMARK OFFICE

UNITED STATES DEPARTMENT OF COMMERCE
United States Patent and Trademark Office
Address: COMMISSIONER FOR PATENTS
P.O. Box 1450
Alexandria, Virginia 22313-1450
www.uspto.gov

FISH & RICHARDSON P.C.
PO BOX 1022
MINNEAPOLIS, MN 55440-1022

Mail Date: 04/20/2010

Applicant	: Hirohito Kita	: DECISION ON REQUEST FOR
Patent Number	: 7662400	: RECALCULATION of PATENT
Issue Date	: 02/16/2010	: TERM ADJUSTMENT IN VIEW
Appliction No	: 11/580,454	: OF WYETH AND NOTICE OF INTENT TO
Filed	: 10/13/2006	: ISSUE CERTIFICATE OF CORRECTION
		:

The Request for Recalculation is **GRANTED** to the extent indicated.

The patent term adjustment has been determined to be **519** days. The USPTO will *sua sponte* issue a certificate of correction reflecting the amount of PTA days determined by the recalculation.

Prior to the issuance of the certificate of correction, the USPTO will afford patentee an opportunity to be heard and request reconsideration. Accordingly, patentee has **one month or thirty (30) days**, whichever is longer, to file a request for reconsideration of this patent term adjustment calculation. See 35 U.S.C. 154(b)(3)(B)(ii) and 37 CFR 1.322(a)(4). No extensions of time will be granted under 37 CFR 1.136.

Patentee should use document code PET.OP if electronically filing a request for reconsideration of this patent term adjustment calculation. The patentee must also include the information required by 37 CFR 1.705(b)(2) and the fee required by 37 CFR 1.18(e). If patentee does not file a timely request for reconsideration of this patent term adjustment calculation including the information required by 37 CFR 1.705(b)(2) and the fee required by 37 CFR 1.18(e), the USPTO will issue a certificate of correction reflecting the PTA determination noted above.

Patentee should be aware that in order to preserve the right to review in the United States District Court for the District of Columbia of the USPTO patent term adjustment determination, patentee must ensure that he or she also take the steps required under 35 U.S.C. 154(b)(4)(A) in a timely manner. Nothing in the request for recalculation should be construed as providing an alternative time frame for commencing a civil action under 35 U.S.C. 154(b)(4)(A).

Any questions concerning this decision should be directed to the Office of Patent Legal Administration at 571-272-7702.

UNITED STATES PATENT AND TRADEMARK OFFICE

Commissioner for Patents
United States Patent and Trademark Office
P.O. Box 1450
Alexandria, VA 22313-1450
www.uspto.gov

KNOBBE MARTENS OLSON & BEAR LLP
2040 MAIN STREET, FOURTEENTH FLOOR
IRVINE, CA 92614

COPY MAILED

SEP 02 2008

In re Application of	:	
Yoshihiro OHMIYA, et al	:	
Application No. 11/580,500	:	DECISION ON PETITION
Filed: October 13, 2006	:	TO WITHDRAW
Attorney Docket No. 2008-0953	:	FROM RECORD
	:	

This is a decision on the Request to Withdraw as attorney or agent of record under 37 C.F.R. § 1.36(b), filed May 20, 2008.

The request is **NOT APPROVED** as moot.

A review of the file record indicates that the power of attorney to Knobbe, Martens, Olson & Bear LLP was revoked by the assignee of the patent application on July 11, 2008. Accordingly, the request to withdraw under 37 C.F.R. § 1.36(b) is moot.

The correspondence address of record has been changed and the new correspondence address is the address indicated below.

Telephone inquires concerning this decision should be directed to undersigned at 571-272- 6735.

Diane Goodwyn
Petitions Examiner
Office of Petitions

cc: NATIONAL INSTITUTE OF ADVANCED
INDUSTRIAL SCIENCE AND TECHNOLOGY
C/O WARREN M. CHEEK
WENDEROTH, LIND & PONACK, LLP
2033 K STREET, NW, SUITE 800
WASHINGTON, DC 20006-1021

UNITED STATES PATENT AND TRADEMARK OFFICE

Commissioner for Patents
United States Patent and Trademark Office
P.O. Box 1450
Alexandria, VA 22313-1450
www.uspto.gov

KNOBBE MARTENS OLSON & BEAR LLP
2040 MAIN STREET, FOURTEENTH FLOOR
IRVINE, CA 92614

COPY MAILED

SEP 02 2008

In re Application of	:	
Yoshihiro OHMIYA, et al	:	
Application No. 11/580,501	:	DECISION ON PETITION
Filed: October 13, 2006	:	TO WITHDRAW
Attorney Docket No. 2008-0954	:	FROM RECORD
	:	

This is a decision on the Request to Withdraw as attorney or agent of record under 37 C.F.R. § 1.36(b), filed May 20, 2008.

The request is **NOT APPROVED** as moot.

A review of the file record indicates that the power of attorney to Knobbe, Martens, Olson & Bear LLP was revoked by the assignee of the patent application on July 11, 2008. Accordingly, the request to withdraw under 37 C.F.R. § 1.36(b) is moot.

The correspondence address of record has been changed and the new correspondence address is the address indicated below.

Telephone inquires concerning this decision should be directed to undersigned at 571-272- 6735.

Diane Goodwyn
Petitions Examiner
Office of Petitions

cc: NATIONAL INSTITUTE OF ADVANCED
INDUSTRIAL SCIENCE AND TECHNOLOGY
C/O WARREN M. CHEEK
WENDEROTH, LIND & PONACK, LLP
2033 K STREET, NW, SUITE 800
WASHINGTON, DC 20006-1021

UNITED STATES PATENT AND TRADEMARK OFFICE

Commissioner for Patents
United States Patent and Trademark Office
P.O. Box 1450
Alexandria, VA 22313-1450
www.uspto.gov

VAN PELT, YI & JAMES LLP
10050 N. FOOTHILL BLVD #200
CUPERTINO CA 95014

COPY MAILED

JUN 0 4 2007

OFFICE OF PETITIONS

In re Application of	:	
Anatoli Stein	:	
Application No. 11/580,523	:	DECISION ON PETITION
Filed: October 13, 2006	:	TO MAKE SPECIAL UNDER
Attorney Docket No. GUZIP002	:	37 CFR 1.102(c)(1)
	:	

This is a decision on the petition under 37 CFR 1.102(c)(1), filed January 27, 2006, to make the above-identified application special based on applicant's age as set forth in M.P.E.P. § 708.02, Section IV.

The petition is **GRANTED**.

A grantable petition to make an application special under 37 CFR 1.102(c)(1) and MPEP § 708.02, Section IV: Applicant's Age must be accompanied by evidence showing that at least one of the applicants is 65 years of age, or more, such as a birth certificate or a statement by applicant. No fee is required

The instant petition includes a statement from the applicant declaring that he is 65 years of age or older. Accordingly, the above-identified application has been accorded "special" status.

Telephone inquiries concerning this decision should be directed to Terri Williams at 571-272-2991.

All other inquiries concerning either the examination or status of the application should be directed to the Technology Center.

The application is being forwarded to the Technology Center Art Unit 2819 for action on the merits commensurate with this decision.

Terri Williams

Terri Williams
Petitions Examiner
Office of Petitions

UNITED STATES PATENT AND TRADEMARK OFFICE

Commissioner for Patents
United States Patent and Trademark Office
P.O. Box 1450
Alexandria, VA 22313-1450
www.uspto.gov

VAN PELT, YI & JAMES LLP
10050 N. FOOTHILL BLVD., #200
CUPERTINO, CA 95014

MAILED

SEP 25 2009

OFFICE OF PETITIONS

In re Application of	:	
Ping Pan, et al.	:	
Application No. 11/580,530	:	DECISION ON PETITION
Filed: October 12, 2006	:	TO WITHDRAW
Attorney Docket No. HAMMP011	:	FROM RECORD
	:	

This is a decision on the Request to Withdraw as attorney or agent of record under 37 C.F.R. § 1.36(b), filed July 24, 2009.

The request is **APPROVED**.

A grantable request to withdraw as attorney/agent of record must be signed by every attorney/agent seeking to withdraw or contain a clear indication that one attorney is signing on behalf of another/others. A request to withdraw will not be approved unless at least 30 (thirty) days would remain between the date of approval and the later of the expiration date of a time to file a response or the expiration date of the maximum time period which can be extended under 37 C.F.R. § 1.136(a).

The request was signed by Lee Van Pelt on behalf of all attorneys of record. All attorneys/agents have been withdrawn. Applicant is reminded that there is no attorney of record at this time.

The request to change the correspondence of record is not acceptable as the requested correspondence address is not that of: (1) the first named signing inventor; or (2) an intervening assignee of the entire interest under 37 C.F.R 3.71. All future communications from the Office will be directed to the first named signing inventor at the first copied address below until otherwise properly notified by the applicant.

There is an outstanding Office action mailed April 29, 2009 that requires a reply from the applicant.

Telephone inquiries concerning this decision should be directed to Terri Johnson at 571-272-2991.

Terri Johnson
Petitions Examiner
Office of Petitions

cc: **Ping Pan**
640 Clyde Court
Mountain View, CA 94043

cc: **Greg Leitich**
804 Baylor Street
Austin, TX 78703

UNITED STATES PATENT AND TRADEMARK OFFICE

UNITED STATES DEPARTMENT OF COMMERCE
United States Patent and Trademark Office
Address: COMMISSIONER FOR PATENTS
P.O. Box 1450
Alexandria, Virginia 22313-1450
www.uspto.gov

APPLICATION NUMBER	FILING OR 371(C) DATE	FIRST NAMED APPLICANT	ATTY. DOCKET NO./TITLE
11/580,530	10/12/2006	Ping Pan	HAMMP011

CONFIRMATION NO. 5129

POWER OF ATTORNEY NOTICE

21912
VAN PELT, YI & JAMES LLP
10050 N. FOOTHILL BLVD #200
CUPERTINO, CA 95014

OC000000037974423

Date Mailed: 09/24/2009

NOTICE REGARDING CHANGE OF POWER OF ATTORNEY

This is in response to the Power of Attorney filed 07/24/2009.

- The withdrawal as attorney in this application has been accepted. Future correspondence will be mailed to the new address of record. 37 CFR 1.33.

/tsjohnson/

Office of Data Management, Application Assistance Unit (571) 272-4000, or (571) 272-4200, or 1-888-786-0101

UNITED STATES PATENT AND TRADEMARK OFFICE

UNITED STATES DEPARTMENT OF COMMERCE
United States Patent and Trademark Office
Address: COMMISSIONER FOR PATENTS
P.O. Box 1450
Alexandria, Virginia 22313-1450
www.uspto.gov

Arnold & Porter LLP (24126)
Attn: IP Docketing Dept.
555 Twelfth Street, N.W.
Washington, DC 20004-1206

Mail Date: 04/21/2010

Applicant	: Daniel E. Afar	: DECISION ON REQUEST FOR
Patent Number	: 7611904	: RECALCULATION of PATENT
Issue Date	: 11/03/2009	: TERM ADJUSTMENT IN VIEW
Appliction No	: 11/580,538	: OF WYETH AND NOTICE OF INTENT TO
Filed	: 10/12/2006	: ISSUE CERTIFICATE OF CORRECTION
		:

The Request for Recalculation is **GRANTED** to the extent indicated.

The patent term adjustment has been determined to be **0** days. The USPTO will *sua sponte* issue a certificate of correction reflecting the amount of PTA days determined by the recalculation.

Prior to the issuance of the certificate of correction, the USPTO will afford patentee an opportunity to be heard and request reconsideration. Accordingly, patentee has **one month or thirty (30) days**, whichever is longer, to file a request for reconsideration of this patent term adjustment calculation. See 35 U.S.C. 154(b)(3)(B)(ii) and 37 CFR 1.322(a)(4). No extensions of time will be granted under 37 CFR 1.136.

Patentee should use document code PET.OP if electronically filing a request for reconsideration of this patent term adjustment calculation. The patentee must also include the information required by 37 CFR 1.705(b)(2) and the fee required by 37 CFR 1.18(e). If patentee does not file a timely request for reconsideration of this patent term adjustment calculation including the information required by 37 CFR 1.705(b)(2) and the fee required by 37 CFR 1.18(e), the USPTO will issue a certificate of correction reflecting the PTA determination noted above.

Patentee should be aware that in order to preserve the right to review in the United States District Court for the District of Columbia of the USPTO patent term adjustment determination, patentee must ensure that he or she also take the steps required under 35 U.S.C. 154(b)(4)(A) in a timely manner. Nothing in the request for recalculation should be construed as providing an alternative time frame for commencing a civil action under 35 U.S.C. 154(b)(4)(A).

Any questions concerning this decision should be directed to the Office of Patent Legal Administration at 571-272-7702.

UNITED STATES PATENT AND TRADEMARK OFFICE

Commissioner for Patents
United States Patent and Trademark Office
P.O. Box 1450
Alexandria, VA 22313-1450
www.uspto.gov

J. WHILEY HORTON
PENNINGTON MOORE WILKINSON BELL & DUNBAR, P.A.
(215 S. MONROE STREET, 2ND FLOOR, 32301)
POST OFFICE BOX 10095
TALLAHASSEE, FL 32302-2095

COPY MAILED

NOV 06 2008

OFFICE OF PETITIONS

In re Application of	:	ON PETITION
Richard V. Campbell et al	:	
Application No. 11/580,549	:	
Filed: October 13, 2006	:	
Attorney Docket No.	:	

This is a decision on the petition under 37 CFR 1.137(b), filed July 25, 2008, to revive the above-identified application.

The petition is **GRANTED**.

The above-identified application became abandoned for failure to reply in a timely manner to the non-final Office action mailed September 25, 2007, which set a shortened statutory period for reply of three (3) months. No extension of time under the provisions of 37 CFR 1.136(a) were obtained. Accordingly, the above-identified application became abandoned on December 26, 2007.

Telephone inquiries concerning this decision should be directed to Irvin Dingle at (571) 272-3210.

This matter is being referred to Technology Center AU 3617 for further processing.

Irvin Dingle
Petitions Examiner
Office of Petitions

UNITED STATES PATENT AND TRADEMARK OFFICE

UNITED STATES DEPARTMENT OF COMMERCE
United States Patent and Trademark Office
Address: COMMISSIONER FOR PATENTS
P.O. Box 1450
Alexandria, Virginia 22313-1450
www.uspto.gov

APPLICATION NO.	FILING DATE	FIRST NAMED INVENTOR	ATTORNEY DOCKET NO.	CONFIRMATION NO.
11/580,573	10/13/2006	David Sabo	200601526-1	6557

7590 07/07/2008
HEWLETT PACKARD COMPANY
P O BOX 272400, 3404 E. HARMONY ROAD
INTELLECTUAL PROPERTY ADMINISTRATION
FORT COLLINS, CO 80527-2400

EXAMINER
HINZE, LEO T

ART UNIT	PAPER NUMBER
2854	

NOTIFICATION DATE	DELIVERY MODE
07/07/2008	ELECTRONIC

DECISION GRANTING PETITION UNDER 37 CFR 1.138(d)

The declaration of express abandonment is recognized

This is in response to the petition under 37 CFR 1.138(d), requesting for a refund of any previously paid search fee and excess claims fee in the above-identified application.

The petition is granted.

The express abandonment is recognized. Any previously paid search fee and excess claims fee are hereby refunded.

Telephone inquiries should be directed to the Office of Data Management at (571) 272-4200.

Patent Publication Branch
Office of Data Management

Adjustment date: 07/03/2008 NFARMER
10/17/2006 GWORDOF1 00000048 082025 11580573
02 FC:1111 500.00 CR

FORM PET651G (Rev. 08/07)

UNITED STATES PATENT AND TRADEMARK OFFICE

UNITED STATES DEPARTMENT OF COMMERCE
United States Patent and Trademark Office
Address: COMMISSIONER FOR PATENTS
P.O. Box 1450
Alexandria, Virginia 22313-1450
www.uspto.gov

TRASKBRITT, P.C.
P.O. BOX 2550
SALT LAKE CITY, UT 84110

Mail Date: 04/20/2010

Applicant	: Arie P. Otte	: DECISION ON REQUEST FOR
Patent Number	: 7659094	: RECALCULATION of PATENT
Issue Date	: 02/09/2010	: TERM ADJUSTMENT IN VIEW
Appliction No	: 11/580,604	: OF WYETH AND NOTICE OF INTENT TO
Filed	: 10/13/2006	: ISSUE CERTIFICATE OF CORRECTION
		:

The Request for Recalculation is **GRANTED** to the extent indicated.

The patent term adjustment has been determined to be **555** days. The USPTO will *sua sponte* issue a certificate of correction reflecting the amount of PTA days determined by the recalculation.

Prior to the issuance of the certificate of correction, the USPTO will afford patentee an opportunity to be heard and request reconsideration. Accordingly, patentee has **one month or thirty (30) days**, whichever is longer, to file a request for reconsideration of this patent term adjustment calculation. See 35 U.S.C. 154(b)(3)(B)(ii) and 37 CFR 1.322(a)(4). No extensions of time will be granted under 37 CFR 1.136.

Patentee should use document code PET.OP if electronically filing a request for reconsideration of this patent term adjustment calculation. The patentee must also include the information required by 37 CFR 1.705(b)(2) and the fee required by 37 CFR 1.18(e). If patentee does not file a timely request for reconsideration of this patent term adjustment calculation including the information required by 37 CFR 1.705(b)(2) and the fee required by 37 CFR 1.18(e), the USPTO will issue a certificate of correction reflecting the PTA determination noted above.

Patentee should be aware that in order to preserve the right to review in the United States District Court for the District of Columbia of the USPTO patent term adjustment determination, patentee must ensure that he or she also take the steps required under 35 U.S.C. 154(b)(4)(A) in a timely manner. Nothing in the request for recalculation should be construed as providing an alternative time frame for commencing a civil action under 35 U.S.C. 154(b)(4)(A).

Any questions concerning this decision should be directed to the Office of Patent Legal Administration at 571-272-7702.

UNITED STATES PATENT AND TRADEMARK OFFICE

Commissioner for Patents
United States Patent and Trademark Office
P.O. Box 1450
Alexandria, VA 22313-1450
www.uspto.gov

MORRISON & FOERSTER, LLP
755 PAGE MILL ROAD
PALO ALTO, CA 94304-1018

COPY MAILED

FEB 29 2008

In re Application of	:	
Prakash Gopalakrishnan et al.	:	
Application No. 11/580,637	:	DECISION ON PETITION
Filed: October 12, 2006	:	TO WITHDRAW
Attorney Docket No. 188122007700	:	FROM RECORD
	:	

This is a decision on the Request to Withdraw as attorney or agent of record under 37 C.F.R. § 1.36(b), filed February 8, 2008.

The request is **NOT APPROVED** as moot.

A review of the file record indicates that the power of attorney to Norman R. Klivans and all attorneys/agents of record has been revoked by the assignee of the patent application on February 26, 2008. Accordingly, the request to withdraw under 37 C.F.R. § 1.36(b) is moot.

All future communications from the Office will continue to be directed to the below-listed address until otherwise notified by applicant.

There are no outstanding Office actions at this time.

Telephone inquires concerning this decision should be directed to Kimberly Inabinet at 571-272-4618.

Kimberly Inabinet
Petitions Examiner
Office of Petitions

cc: Wheelock, Chan, LLP
2880 Zanker Road
Suite 109
San Jose, CA 95134

UNITED STATES PATENT AND TRADEMARK OFFICE

UNITED STATES DEPARTMENT OF COMMERCE
United States Patent and Trademark Office
Address: COMMISSIONER FOR PATENTS
P.O. Box 1450
Alexandria, Virginia 22313-1450
www.uspto.gov

APPLICATION NUMBER	FILING OR 371(C) DATE	FIRST NAMED APPLICANT	ATTY. DOCKET NO./TITLE
11/580,637	10/12/2006	Prakash Gopalakrishnan	188122007700

CONFIRMATION NO. 5997

POWER OF ATTORNEY NOTICE

25226
MORRISON & FOERSTER LLP
755 PAGE MILL RD
PALO ALTO, CA 94304-1018

OC000000028563480

Date Mailed: 02/29/2008

NOTICE REGARDING CHANGE OF POWER OF ATTORNEY

This is in response to the Power of Attorney filed 02/26/2008.

- The Power of Attorney to you in this application has been revoked by the assignee who has intervened as provided by 37 CFR 3.71. Future correspondence will be mailed to the new address of record(37 CFR 1.33).

/kainabinet/

Office of Initial Patent Examination (571) 272-4000 or 1-800-PTO-9199

UNITED STATES PATENT AND TRADEMARK OFFICE

UNITED STATES DEPARTMENT OF COMMERCE
United States Patent and Trademark Office
Address: COMMISSIONER FOR PATENTS
P.O. Box 1450
Alexandria, Virginia 22313-1450
www.uspto.gov

TRASKBRITT, P.C.
P.O. BOX 2550
SALT LAKE CITY, UT 84110

Mail Date: 04/20/2010

Applicant	: Arie P. Otte	: DECISION ON REQUEST FOR
Patent Number	: 7662591	: RECALCULATION of PATENT
Issue Date	: 02/16/2010	: TERM ADJUSTMENT IN VIEW
Appliction No	: 11/580,644	: OF WYETH AND NOTICE OF INTENT TO
Filed	: 10/13/2006	: ISSUE CERTIFICATE OF CORRECTION
		:

The Request for Recalculation is **GRANTED** to the extent indicated.

The patent term adjustment has been determined to be **562** days. The USPTO will *sua sponte* issue a certificate of correction reflecting the amount of PTA days determined by the recalculation.

Prior to the issuance of the certificate of correction, the USPTO will afford patentee an opportunity to be heard and request reconsideration. Accordingly, patentee has **one month or thirty (30) days**, whichever is longer, to file a request for reconsideration of this patent term adjustment calculation. See 35 U.S.C. 154(b)(3)(B)(ii) and 37 CFR 1.322(a)(4). No extensions of time will be granted under 37 CFR 1.136.

Patentee should use document code PET.OP if electronically filing a request for reconsideration of this patent term adjustment calculation. The patentee must also include the information required by 37 CFR 1.705(b)(2) and the fee required by 37 CFR 1.18(e). If patentee does not file a timely request for reconsideration of this patent term adjustment calculation including the information required by 37 CFR 1.705(b)(2) and the fee required by 37 CFR 1.18(e), the USPTO will issue a certificate of correction reflecting the PTA determination noted above.

Patentee should be aware that in order to preserve the right to review in the United States District Court for the District of Columbia of the USPTO patent term adjustment determination, patentee must ensure that he or she also take the steps required under 35 U.S.C. 154(b)(4)(A) in a timely manner. Nothing in the request for recalculation should be construed as providing an alternative time frame for commencing a civil action under 35 U.S.C. 154(b)(4)(A).

Any questions concerning this decision should be directed to the Office of Patent Legal Administration at 571-272-7702.

UNITED STATES PATENT AND TRADEMARK OFFICE

COMMISSIONER FOR PATENTS
UNITED STATES PATENT AND TRADEMARK OFFICE
P.O. BOX 1450
ALEXANDRIA, VA 22313-1450
www.uspto.gov

Paper No.

GERALD M. BLUHM
TYCO SAFETY PRODUCTS
50 TECHNOLOGY DRIVE
WESTMINSTER MA 01441-0001

MAILED

MAR 3 1 2010

OFFICE OF PETITIONS

In re Application of	:	
Farley et al.	:	DECISION ON LETTER
Application No. 11/580,654	:	REGARDING
Filed: October 13, 2006	:	PATENT TERM ADJUSTMENT
Attorney Docket No.	:	
12715-42 (20292.3)	:	

This letter is in response to the "REQUEST FOR REVIEW OF PATENT TERM ADJUSTMENT," filed on December 11, 2009. Applicants request that the patent term adjustment be reviewed for accuracy.

The request for correction of the determination of patent term adjustment (PTA) is **GRANTED**.

The Office has updated the PAIR and PALM screens to reflect that the Patent Term Adjustment at the time of the mailing of the Notice of Allowance is 210 days (306 days of PTO delay less 96 days of applicant delay). A copy of the updated PALM screen, showing the correct determination, is enclosed.

On September 17, 2009, the Office mailed the Determination of Patent Term Adjustment under 35 USC 154(b) in the above-identified application. The Notice stated that the patent term adjustment to date is 306 days.

The Office initially determined a patent term adjustment of 306 days, pursuant to 35 USC 154(b). This was reduced by 0 days of applicant delay pursuant to 37 CFR 1.704(b).

On December 11, 2009, then applicants filed the subject letter requesting review of the patent term adjustment. Also on December 11, 2009, the issue fee was paid.

Applicants state that "the patent term adjustment of 315 days indicated on the Determination of Patent Term Adjustment, PTOL-85, may extent the term of this patent by too many days." (emphasis in original)

At the outset, the Determination of Patent Term Adjustment indicated a Patent Term Adjustment to date of 306 days, not 315 days. Patentees' argument will be articulated accordingly.

Upon review, patentees are correct.

37 CFR 1.704(c)(8) states that circumstances that constitute a failure of the applicant to engage in reasonable efforts to conclude processing or examination of an application also include the following circumstances, which will result in the following reduction of the period of adjustment set forth in § 1.703 to the extent that the periods are not overlapping: submission of a supplemental reply or other paper, other than a supplemental reply or other paper expressly requested by the examiner, after a reply has been filed, in which case the period of adjustment set forth in § 1.703 shall be reduced by the number of days, if any, beginning on the day after the date the initial reply was filed and ending on the date that the supplemental reply or other such paper was filed.

After filing a reply on June 4, 2009, to the non-final Office action mailed on March 9, 2009, applicants filed a supplemental reply on September 4, 2009, 92 days after the day after the date the reply of June 4, 2009 was filed. Additionally, on September 8, 2009, an additional supplemental reply was filed, 96 days after the day after the date the reply of June 4, 2009 was filed. Neither the supplemental reply filed on September 4, 2009, nor the supplemental reply filed on September 8, 2009, was expressly requested by the examiner within the meaning of 37 CFR 1.704(c)(8).

The 96 day period of delay overlaps with the 92 day period of delay. The non-overlapping period is 96 (96 + 92 - 92 overlap) days.

Accordingly, the filing of the supplemental replies on September 4, 2009, and September 8, 2009, respectively, are considered a failure to engage in reasonable efforts to conclude processing or examination of an application. The patent term adjustment will therefore be reduced 96 days.

Applicants state that the application is subject to a terminal disclaimer.

In view thereof, the correct determination of PTA at the time of the mailing of the Notice of Allowance is **two hundred ten (210) days** (306 days of PTO delay, reduced by 96 days of Applicant delay).

As the instant letter was submitted to advise the Office of an error in Applicants' favor, the $200.00 application fee under 37 CFR 1.705(b) was not required, and has not been charged.

The Office thanks Applicants for their good faith and candor in bringing this matter to the attention of the Office.

The application is being forwarded to the Office of Data Management for issuance of a patent. The patent term adjustment indicated on the patent (as shown on the Issue Notification mailed about three weeks prior to patent issuance) will include any additional adjustment accrued both for Office delay in issuing the patent more than four months after payment of the issue fee and satisfaction of all outstanding requirements, and for the Office taking in excess of three years to issue the patent (to the extent that the three-year period does not overlap with periods already accorded).

Telephone inquiries specific to this matter should be directed to Douglas I. Wood, Senior Petitions Attorney, at (571) 272-3231.

Nancy Johnson

Anthony Knight
Supervisor,
Office of Petitions

Enclosure: Copy of revised PALM screen

Day : Wednesday

PALM INTRANET

Date: 3/31/2010
Time: 09:28:52

PTA Calculations for Application: 11/580654			
Application Filing Date:	10/13/2006	PTO Delay (PTO):	306
Issue Date of Patent:		Three Years:	0
Pre-Issue Petitions:	0	Applicant Delay (APPL):	0
Post-Issue Petitions:	0	Total PTA (days):	210
PTO Delay Adjustment:	-96		

File Contents History

Number	Date	Contents Description	PTO	APPL	START
77	03/26/2010	ADJUSTMENT OF PTA CALCULATION BY PTO		96	
69	09/17/2009	MAIL NOTICE OF ALLOWANCE			
68	09/14/2009	ISSUE REVISION COMPLETED			
67	09/14/2009	DOCUMENT VERIFICATION			
66	09/14/2009	NOTICE OF ALLOWANCE DATA VERIFICATION COMPLETED			
65	09/12/2009	NOTICE OF ALLOWABILITY			
57	07/07/2009	DATE FORWARDED TO EXAMINER			
56	06/04/2009	RESPONSE AFTER NON-FINAL ACTION			
55	03/09/2009	MAIL NON-FINAL REJECTION			
54	03/05/2009	NON-FINAL REJECTION			
53	11/20/2008	INFORMATION DISCLOSURE STATEMENT CONSIDERED			
52	10/15/2008	INFORMATION DISCLOSURE STATEMENT CONSIDERED			
48	01/12/2009	DATE FORWARDED TO EXAMINER			
47	01/09/2009	RESPONSE AFTER NON-FINAL ACTION			
46	11/20/2008	INFORMATION DISCLOSURE STATEMENT (IDS) FILED			
45	10/15/2008	REFERENCE CAPTURE ON IDS			
44	10/15/2008	MISCELLANEOUS INCOMING LETTER			
43	10/15/2008	INFORMATION DISCLOSURE STATEMENT (IDS) FILED			
42	11/20/2008	INFORMATION DISCLOSURE STATEMENT (IDS) FILED			
41	10/15/2008	INFORMATION DISCLOSURE STATEMENT (IDS) FILED			
40	10/14/2008	MAIL NON-FINAL REJECTION	306		-1

39	10/10/2008	NON-FINAL REJECTION			
38	07/24/2007	INFORMATION DISCLOSURE STATEMENT CONSIDERED			
37	10/13/2006	INFORMATION DISCLOSURE STATEMENT CONSIDERED			
36	10/30/2006	INFORMATION DISCLOSURE STATEMENT CONSIDERED			
35	12/11/2006	INFORMATION DISCLOSURE STATEMENT CONSIDERED			
30	08/31/2008	CASE DOCKETED TO EXAMINER IN GAU			
29	05/29/2008	CORRESPONDENCE ADDRESS CHANGE			
28	02/16/2008	CASE DOCKETED TO EXAMINER IN GAU			
27	10/17/2007	WITHDRAW FLAGGED FOR 5/25			
26	10/15/2007	FLAGGED FOR 5/25			
25	07/24/2007	INFORMATION DISCLOSURE STATEMENT (IDS) FILED			
24	07/24/2007	INFORMATION DISCLOSURE STATEMENT (IDS) FILED			
23	10/13/2006	INFORMATION DISCLOSURE STATEMENT (IDS) FILED			
22	10/30/2006	INFORMATION DISCLOSURE STATEMENT (IDS) FILED			
21	05/21/2007	IFW TSS PROCESSING BY TECH CENTER COMPLETE			
20	10/30/2006	ELECTRONIC INFORMATION DISCLOSURE STATEMENT			
19	10/13/2006	REFERENCE CAPTURE ON IDS			
18	10/13/2006	INFORMATION DISCLOSURE STATEMENT (IDS) FILED			
17	05/17/2007	PG-PUB ISSUE NOTIFICATION			
16	02/02/2007	RECEIPT OF ALL ACKNOWLEDGEMENT LETTERS			
15	02/02/2007	RECEIPT OF ACKNOWLEDGMENT LETTER			
13	12/11/2006	REFERENCE CAPTURE ON IDS			
12.7	12/11/2006	INFORMATION DISCLOSURE STATEMENT (IDS) FILED			
12	12/11/2006	INFORMATION DISCLOSURE STATEMENT (IDS) FILED			
11	11/07/2006	APPLICATION RETURN FROM OIPE			
10	11/07/2006	APPLICATION RETURN TO OIPE			
9	11/06/2006	APPLICATION RETURN FROM OIPE			

8	11/06/2006	APPLICATION RETURN TO OIPE			
7	11/06/2006	APPLICATION DISPATCHED FROM OIPE			
6	11/06/2006	APPLICATION IS NOW COMPLETE			
5	11/03/2006	AGENCY REFERRAL LETTER MAILED			
4	11/02/2006	REFERRED BY L&R FOR THIRD-LEVEL SECURITY REVIEW. AGENCY REFERRAL LETTER GENERATED			
3	10/30/2006	REFERRED TO LEVEL 2 (LARS) BY OIPE CSR			
2	10/26/2006	IFW SCAN & PACR AUTO SECURITY REVIEW			
1	10/13/2006	INITIAL EXAM TEAM NN			

Search Another: Application# Search

EXPLANATION OF PTA CALCULATION

EXPLANATION OF PTE CALCULATION

To go back, right click here and select Back. To go forward, right click here and select Forward. To refresh, right click here and select Refresh.

Back to OASIS | Home page

UNITED STATES PATENT AND TRADEMARK OFFICE

UNITED STATES DEPARTMENT OF COMMERCE
United States Patent and Trademark Office
Address: COMMISSIONER FOR PATENTS
P.O. Box 1450
Alexandria, Virginia 22313-1450
www.uspto.gov

HONEYWELL/IFL
Patent Services
101 Columbia Road
P.O.Box 2245
Morristown, NJ 07962-2245

Mail Date: 04/20/2010

Applicant	: Calvin C. Potter	: DECISION ON REQUEST FOR
Patent Number	: 7608951	: RECALCULATION of PATENT
Issue Date	: 10/27/2009	: TERM ADJUSTMENT IN VIEW
Appliction No	: 11/580,664	: OF WYETH AND NOTICE OF INTENT TO
Filed	: 10/13/2006	: ISSUE CERTIFICATE OF CORRECTION
		:

The Request for Recalculation is **GRANTED** to the extent indicated.

The patent term adjustment has been determined to be **477** days. The USPTO will *sua sponte* issue a certificate of correction reflecting the amount of PTA days determined by the recalculation.

Prior to the issuance of the certificate of correction, the USPTO will afford patentee an opportunity to be heard and request reconsideration. Accordingly, patentee has **one month or thirty (30) days**, whichever is longer, to file a request for reconsideration of this patent term adjustment calculation. See 35 U.S.C. 154(b)(3)(B)(ii) and 37 CFR 1.322(a)(4). No extensions of time will be granted under 37 CFR 1.136.

Patentee should use document code PET.OP if electronically filing a request for reconsideration of this patent term adjustment calculation. The patentee must also include the information required by 37 CFR 1.705(b)(2) and the fee required by 37 CFR 1.18(e). If patentee does not file a timely request for reconsideration of this patent term adjustment calculation including the information required by 37 CFR 1.705(b)(2) and the fee required by 37 CFR 1.18(e), the USPTO will issue a certificate of correction reflecting the PTA determination noted above.

Patentee should be aware that in order to preserve the right to review in the United States District Court for the District of Columbia of the USPTO patent term adjustment determination, patentee must ensure that he or she also take the steps required under 35 U.S.C. 154(b)(4)(A) in a timely manner. Nothing in the request for recalculation should be construed as providing an alternative time frame for commencing a civil action under 35 U.S.C. 154(b)(4)(A).

Any questions concerning this decision should be directed to the Office of Patent Legal Administration at 571-272-7702.

UNITED STATES PATENT AND TRADEMARK OFFICE

Commissioner for Patents
United States Patent and Trademark Office
P.O. Box 1450
Alexandria, VA 22313-1450
www.uspto.gov

LEYDIG VOIT & MAYER, LTD.
TWO PRUDENTIAL PLAZA,
SUITE 4900
180 NORTH STETSON AVENUE
CHICAGO IL 60601-6731

COPY MAILED

DEC 2 2 2009

OFFICE OF PETITIONS

In re Application of	:	
Shawn DEFREES, et al	:	
Application No. 11/580,669	:	NOTICE
Filed: October 13, 2006	:	
Attorney Docket No. 705746	:	

This is a notice regarding your request for acceptance of a fee deficiency submission under 37 CFR 1.28. On September 1, 1998, the Court of Appeals for the Federal Circuit held that 37 CFR 1.28(c) is the sole provision governing the time for correction of the erroneous payment of the issue fee as a small entity. **See DH Technology v. Synergystex International, Inc. 154 F.3d 1333, 47 USPQ2d 1865 (Fed. Cir. Sept. 1, 1998).**

The Office no longer investigates or rejects original or reissue applications under 37 CFR 1.56. **1098 Off. Gaz. Pat. Office 502 (January 3, 1989)**. Therefore, nothing in this Notice is intended to imply that an investigation was done.

Your fee deficiency submission under 37 CFR 1.28 is hereby **ACCEPTED**.

This application is no longer entitled to small entity status. Accordingly, all future fees paid in this application must be paid at the large entity rate.

Inquiries related to this communication should be directed to Diane Goodwyn at (571) 272-6735.

Thurman K. Page
Petitions Examiner
Office of Petitions

UNITED STATES PATENT AND TRADEMARK OFFICE

Commissioner for Patents
United States Patent and Trademark Office
P.O. Box 1450
Alexandria, VA 22313-1450
www.uspto.gov

MERCK
PATENT DEPARTMENT (K-6-1, 1990)
2000 GALLOPING HILL ROAD
KENILWORTH NJ 07033-0530

MAILED

JUL 23 2010

OFFICE OF PETITIONS

In re Application of	:	
Crane et al.	:	
Application No. 11/580,673	:	ON APPLICATION FOR
Filed: October 13, 2006	:	PATENT TERM ADJUSTMENT
Atty Docket No. FC01093Q3US	:	

This is in response to the APPLICATION FOR PATENT TERM ADJUSTMENT UNDER 37 CFR § 1.705(b), filed June 15, 2010. Applicants submit that the correct patent term adjustment to be indicated on the patent is seven hundred one (701) days[1], not three hundred ten (310) days as calculated by the Office as of the mailing of the initial determination of patent term adjustment. Applicants request this correction solely on the basis that the Office will take in excess of three years to issue this patent.

As the instant application for patent term adjustment requests reconsideration of the patent term adjustment as it relates to the Office's failure to issue the patent within 3 years of the filing date, the application for patent term adjustment under 37 CFR 1.705(b) is **DISMISSED as PREMATURE**.

Knowledge of the actual date the patent issues is required to calculate the amount, if any, of additional patent term patentees are entitled to for Office failure to issue the patent within 3 years. See § 1.702(b). The computer will not undertake the § 1.702(b) calculation until the actual date of issuance of the patent has been determined. Likewise, the computer will not calculate any further Office delay under § 1.702(a)(4) or applicant delay under § 1.704(c)(10) until the actual date of issuance of the patent has been determined. As such, the Office can not make a determination on the correctness of the patent term adjustment until the patent has issued.

---

[1] This calculation is based on a projected issuance date of September 21, 2010.

Requesting reconsideration of the patent term adjustment to be indicated on the patent under 37 CFR 1.705(b) based on the initial determination of patent term adjustment and a projected issuance date of the patent is premature. Accordingly, it is appropriate to dismiss as premature such a request.

Rather than file an application for patent term adjustment under 37 CFR 1.705(b) contesting the 37 CFR 1.702(b) calculation at the time of the mailing of the notice of allowance, applicants are advised that they may wait until the time of the issuance of the patent and file a request for reconsideration of the patent term adjustment pursuant to 37 CFR 1.705(d). As the USPTO does not calculate the amount of time earned pursuant to 37 CFR 1.702(b) until the time of the issuance of the patent, the Office will consider any request for reconsideration of the patent term adjustment due to an error in the calculation of 37 CFR 1.702(b) to be timely if the request for reconsideration is filed within two months of the issuance of the patent. However, as to all other bases for contesting the initial determination of patent term adjustment received with the notice of allowance, applicants must timely file an application for patent term adjustment prior to the payment of the issue fee[2].

The $200.00 fee set forth in 37 CFR 1.18(e) for consideration of the application for patent term adjustment under 37 CFR 1.705(b) will be charged to deposit account no. 19-0365.

Any request for reconsideration of the patent term adjustment indicated on the patent must be timely filed within 2 months after issuance pursuant to 37 CFR 1.705(d) and must include payment of the required fee under 37 CFR 1.18(e).

The Office of Data Management has been advised of this decision. This application is being referred to the Office of Data Management for issuance of the patent.

---

[2] For example, if applicant disputes both the calculation of patent term adjustment under 37 CFR 1.702(a)(1) for Office failure to mail a first Office action or notice of allowance not later than fourteen months after the date on which the application was filed and under 37 CFR 1.702(b) for Office failure to issue a patent within three years of the actual filing date of the application, then applicant must still timely file an application for patent term adjustment prior to the payment of the issue fee to contest the calculation of Office delay in issuing a first Office action or notice of allowance. See 37 CFR 1.705(b) and 35 U.S.C. 154(b)(3)(B). A dispute as to the calculation of the §1.702(a)(1) period raised on request for reconsideration of patent term adjustment under 37 CFR 1.705(d) will be dismissed as untimely filed.

Telephone inquiries specific to this decision should be directed to the undersigned at (571) 272-3230.

Shirene Willis Brantley
Senior Petitions Attorney
Office of Petitions

UNITED STATES PATENT AND TRADEMARK OFFICE

Commissioner for Patents
United States Patent and Trademark Office
P.O. Box 1450
Alexandria, VA 22313-1450
www.uspto.gov

DORSEY & WHITNEY LLP
INTELLECTUAL PROPERTY DEPARTMENT
SUITE 1500
50 SOUTH SIXTH STREET
MINNEAPOLIS, MN 55402-1498

COPY MAILED
MAR 0 3 2008
OFFICE OF PETITIONS

Applicant: Tian et al.
Appl. No.: 11/580,700
Filing Date: October 13, 2006
Title: Arrangement Scheme of a Container Wharf and the Container Loading/Unloading Process
Attorney Docket No.: 188415/US
Pub. No.: US 2007/0248444-A1
Pub. Date: October 25, 2007

This is a decision on the request for a corrected patent application publication under 37 CFR 1.221(b), received on January 14, 2008, for the above-identified application.

The request is DISMISSED.

Applicant requests that the application be republished to include assignment information on the front page of the patent application publication.

37 CFR 1.221(b) is applicable "only when the Office makes a material mistake which is apparent from Office records. Any request for a corrected or revised patent application publication other than as provided in paragraph (a) of this section must be filed within **two months** from the date of the patent application publication. This period is not extendable." A material mistake must affect the public's ability to appreciate the technical disclosure of the patent application publication, to determine the scope of the patent application publication, or to determine the scope of the provisional rights that an applicant may seek to enforce upon issuance of a patent. [1]

The request for corrected publication, received on January 14, 2008, was not timely filed under 37 CFR 1.221(b).

The instant request does not identify a mistake in the publication made by the Office under 37 CFR 1.221(b) with respect to the assignment information. The assignment information was not provided with an application data sheet or transmittal letter on filing.[2]

---

[1] Changes to Implement Eighteen-Month Publication of Patent Applications, 65 FR 57023, 57038 (Sept. 20, 2000), 1239, Off. Gaz. Pat. Office Notices 63, 75 (Oct. 10, 2000) (final rule).
[2] See 37 CFR 1.215, MPEP 1122 and Comment 59, Changes to Implement Eighteen-Month Publication of Patent Applications, 65 FR 57023, 57047 (Sept. 20, 2000), 1239 Off. Gaz. Pat. Office Notices 63, 84 (Oct. 10, 2000) (final rule).

Applicants should not file requests for corrected publication when a publication includes errors in assignment information or missing assignment information. See MPEP 1130. An error in assignment information does not affect the public's ability to appreciate the technical disclosure of the patent application publication, to determine the scope of the patent application publication, or to determine the scope of the provisional rights that an applicant may seek to enforce upon issuance of a patent.

Applicant is reminded of his duty to conduct a reasonable inquiry before filing a paper before the Office. See MPEP 410.

Applicants' request for a corrected patent application publication on January 14, 2008, may constitute a "failure to engage in reasonable efforts to conclude processing or examination of the application." See 1.704(c). This determination will be made on or after a mailing of a Notice of Allowance.

Applicant is advised that a "request for republication of an application previously published" may be filed under 37 CFR 1.221(a). Such a request for republication "must include a copy of the application in compliance with the Office electronic filing system requirements and be accompanied by the publication fee set forth in § 1.18(d) and the processing fee set forth in § 1.17(i)." If the request for republication does not comply with the electronic filing system requirements, the republication will not take place and the publication fee set forth in § 1.18(d) will be refunded. The processing fee will be retained.

Any request for republication under 37 CFR 1.221(a) must be submitted via the EFS system as a "Pre-Grant Publication" and any questions or request for reconsideration of the decision should be addressed as follows:

By mail to: Mail Stop PGPUB
Commissioner for Patents
P.O. Box 1450
Alexandria, Va. 22313-1450

By facsimile: 571-273-8300

Inquiries relating to this matter may be directed to Mark Polutta at (571) 272-7709.

Mark Polutta
Senior Legal Advisor
Office of Patent Legal Administration
Office of the Deputy Commissioner
for Patent Examination Policy

UNITED STATES PATENT AND TRADEMARK OFFICE

Commissioner for Patents
United States Patent and Trademark Office
P.O. Box 1450
Alexandria, VA 22313-1450
www.uspto.gov

Peter Vincent
PePeter Tool Co.
P.O. Box 103
Upper Jay NY 12987

MAILED
MAR 23 2010
OFFICE OF PETITIONS

In re Application of	:	
Peter Vincent	:	
Application No. 11/580,702	:	ON PETITION
Filed: October 13, 2006	:	
Attorney Docket No. 3866.1000-002	:	

This is a decision on the petition under the unintentional provisions of 37 CFR 1.137(b), filed December 7, 2009, to revive the above-identified application.

The petition is **DISMISSED**.

Any request for reconsideration of this decision must be submitted within TWO (2) MONTHS from the mail date of this decision. Extensions of time under 37 CFR 1.136(a) are permitted. The reconsideration request should include a cover letter entitled "Renewed Petition under 37 CFR 1.137(b)." This is **not** a final agency action within the meaning of 5 U.S.C. § 704.

The application became abandoned for failure to timely file a reply within the meaning of 37 CFR 1.113 to the final Office action of January 13, 2009. The proposed reply required for consideration of a petition to revive must be a Notice of Appeal (and appeal fee required by 37 CFR 41.20(b)(2), an amendment that prima facie places the application in condition for allowance, a Request for Continued Examination and submission (37 CFR 1.114), or the filing of a continuing application under 37 CFR 1.53(b). See MPEP 711.03(c)(III)(A)(2). No extensions of time pursuant to the provisions of 37 CFR 1.136(a) were obtained. Accordingly, the date of abandonment of this application is May 19, 2009. The Notice of Abandonment was mailed July 22, 2009.

A grantable petition under 37 CFR 1.137(b) must be accompanied by: (1) the required reply, unless previously filed; (2) the petition fee as set forth in 37 CFR 1.17(m); (3) a statement that the entire delay in filing the required reply from the due date for the reply until the filing of a grantable petition pursuant to 37 CFR 1.137(b) was unintentional; and (4) any terminal disclaimer (and fee as set forth in 37 CFR 1.20(d)) required by 37 CFR 1.137(d). Where there is a question as to whether either the abandonment or the delay in filing a petition under 37 CFR 1.137 was unintentional, the Director may require additional information. See MPEP 711.03(c)(II)(C) and (D). The instant petition lacks item(s) (1).

There was no reply to the Office action mailed January 13, 2009 received herewith petition.

Further correspondence with respect to this matter should be addressed as follows:

By Mail: Mail Stop PETITION
Commissioner for Patents
P. O. Box 1450
Alexandria, VA 22313-1450

By hand: U. S. Patent and Trademark Office
Customer Service Window, Mail Stop Petitions
Randolph Building
401 Dulany Street
Alexandria, VA 22314

The centralized facsimile number is **(571) 273-8300.**

Telephone inquiries concerning this decision should be directed to the undersigned at (571) 272-2991.

Terri Johnson

Terri Johnson
Petitions Examiner
Office of Petitions

UNITED STATES PATENT AND TRADEMARK OFFICE

Commissioner for Patents
United States Patent and Trademark Office
P.O. Box 1450
Alexandria, VA 22313-1450
www.uspto.gov

KENYON & KENYON LLP
ONE BROADWAY
NEW YORK NY 10004

COPY MAILED

MAR 2 6 2009

OFFICE OF PETITIONS

In re Application of

HEATHER, Ashley et al.
Application No. 11/580,724
Filed: October 13, 2006
Attorney Docket No. **13725/3**

DECISION ON PETITION
TO WITHDRAW
FROM RECORD

This is a decision on the Request to Withdraw as attorney or agent of record under 37 C.F.R. § 1.36(b), filed March 05, 2009.

The request is **APPROVED**.

A grantable request to withdraw as attorney/agent of record must be signed by every attorney/agent seeking to withdraw or contain a clear indication that one attorney is signing on behalf of another/others. The Office requires the practitioner(s) requesting withdrawal to certify that he, she, or they have: (1) given reasonable notice to the client, prior to the expiration of the response period, that the practitioner(s) intends to withdraw from employment; (2) delivered to the client or a duly authorized representative of the client all papers and property (including funds) to which the client is entitled; and (3) notified the client of any responses that may be due and the time frame within which the client must respond, pursuant 37 CFR 10.40(c).

The request was signed by Linda Lecomte on behalf of all attorneys of record who are associated with customer No. 26646. All attorneys/agents associated with the Customer Number 26646 have been withdrawn. Applicant is reminded that there is no attorney of record at this time.

All future correspondence will be directed to the first named inventor Ashley Heather at the address indicated below.

Telephone inquiries concerning this decision should be directed to Tredelle Jackson at 571-272-2783.

Tredelle D. Jackson
Paralegal Specialist
Office of Petitions

cc: **ASHLEY HEATHER**
158 WEST 75TH STREET, APT. A
NEW YORK NY 10023

cc: **MR. CHARLES DARLING**
250 EAST 77TH STREET, APT. 3A
NEW YORK NY 10075-2131

UNITED STATES PATENT AND TRADEMARK OFFICE

Commissioner for Patents
United States Patent and Trademark Office
P.O. Box 1450
Alexandria, VA 22313-1450
www.uspto.gov

ROPES & GRAY LLP
PATENT DOCKETING 39/361
1211 AVENUE OF THE AMERICAS
NEW YORK NY 10036-8704

MAILED

JUN 04 2010

OFFICE OF PETITIONS

In re Application of	:	
Joel G. Hassell, et al.	:	
Application No. 11/580,729	:	DECISION GRANTING PETITION
Filed: October 13, 2006	:	UNDER 37 CFR 1.313(c)(2)
Attorney Docket No. UV-70 Cont. 5	:	

This is a decision on the petition under 37 CFR 1.313(c)(2), filed, June 4, 2010 to withdraw the above-identified application from issue after payment of the issue fee.

The petition is **GRANTED**.

The above-identified application is withdrawn from issue for consideration of a submission under 37 CFR 1.114 (request for continued examination). *See* 37 CFR 1.313(c)(2).

Petitioner is advised that the issue fee paid on April 28, 2010 cannot be refunded. If, however, this application is again allowed, petitioner may request that it be applied towards the issue fee required by the new Notice of Allowance.[1]

Telephone inquiries should be directed to Terri Johnson at (571) 272-2991.

This application is being referred to Technology Center AU 2421 for processing of the request for continued examination under 37 CFR 1.114 and for consideration of the concurrently filed information disclosure statement.

Terri Johnson
Petitions Examiner
Office of Petitions

---

[1] *The request to apply the issue fee to the new Notice may be satisfied by completing and returning the new Part B – Fee(s) Transmittal Form (along with any balance due at the time of submission). Petitioner is advised that the Issue Fee Transmittal Form* ***must*** *be completed and timely submitted to avoid abandonment of the application.*

UNITED STATES PATENT AND TRADEMARK OFFICE

Commissioner for Patents
United States Patent and Trademark Office
P.O. Box 1450
Alexandria, VA 22313-1450
www.uspto.gov

Paper No.

ROPES & GRAY LLP
PATENT DOCKETING 39/361
1211 AVENUE OF THE AMERICAS
NEW YORK NY 10036-8704

MAILED

JUL 20 2010

OFFICE OF PETITIONS

In re Application of :
Hassell et al. :
Application No. 11/580,729 :
Filed: October 13, 2006 :
Atty Docket No. UV-70 CONT. 5 :
Title: TELEVISION PROGRAM :
GUIDE WITH A DIGITAL STORAGE :
DEVICE AND A SECONDARY :
STORAGE DEVICE :

ON APPLICATION FOR
PATENT TERM ADJUSTMENT

This is in response to the "REQUEST FOR RECONSIDERTAION OF PATENT TERM ADJUSTMENT," filed April 28, 2010. Applicant submits that the correct patent term adjustment to be indicated on the patent is at least four hundred and twenty-four (424) days, not three hundred and eight (308) days as calculated by the Office as of the mailing of the initial determination of patent term adjustment. Applicant requests this correction solely on the basis that the Office will take in excess of three years to issue this patent.

However, prior to a decision on the letter regarding patent term adjustment being rendered, on June 4, 2010, Applicant filed a petition to withdraw from issue along with a request for continued examination (RCE). By decision mailed June 4, 2010, the withdrawal from issue was granted. Prosecution was reopened.

A Notice of Allowance and Fee(s) Due was mailed on June 28, 2010, along with a Determination of Patent Term Adjustment under 35 U.S.C. 154 (b) which indicates that the Patent Term Adjustment to date is 308 days (the same amount as was indicated on the original Determination of Patent Term Adjustment under 35 U.S.C. 154 (b), mailed November 17, 2009).

As the instant application for patent term adjustment requests reconsideration of the patent term adjustment as it relates to the Office's failure to issue the patent within 3 years of the filing date, the application for patent term adjustment under 37 CFR 1.705(b) is **DISMISSED as PREMATURE**.

Knowledge of the actual date the patent issues is required to calculate the amount, if any, of additional patent term patentee is entitled to for Office failure to issue the patent within 3 years. See § 1.702(b). (This is true even where a request for continued examination (RCE) was filed). The computer will not undertake the § 1.702(b) calculation until the actual date of issuance of the patent has been determined. Likewise, the computer will not calculate any further Office delay under § 1.702(a)(4) or applicant delay under § 1.704(c)(10) until the actual date of issuance of the patent has been determined. As such, the Office cannot make a determination on the correctness of the patent term adjustment until the patent has issued.

Requesting reconsideration of the patent term adjustment to be indicated on the patent under 37 CFR 1.705(b) based on the initial determination of patent term adjustment and a projected issuance date of the patent (or even the filing date of the request for continued examination) is premature. Accordingly, it is appropriate to dismiss as premature such a request.

Rather than file an application for patent term adjustment under 37 CFR 1.705(b) contesting the 37 CFR 1.702(b) calculation at the time of the mailing of the notice of allowance, applicant is advised that they may wait until the time of the issuance of the patent and file a request for reconsideration of the patent term adjustment pursuant to 37 CFR 1.705(d). As the USPTO does not calculate the amount of time earned pursuant to 37 CFR 1.702(b) until the time of the issuance of the patent, the Office will consider any request for reconsideration of the patent term adjustment due to an error in the calculation of 37 CFR 1.702(b) to be timely if the request for reconsideration is filed within two months of the issuance of the patent. However, as to all other bases for contesting the initial determination of patent term adjustment received with the notice of allowance, applicant must timely file an application for patent term adjustment prior to the payment of the issue fee.[1]

---

[1] For example, if applicant disputes both the calculation of patent term adjustment under 37 CFR 1.702(a)(1) for Office failure to mail a first Office action or notice of allowance not later than fourteen months after the date

The Office acknowledges submission of the $200.00 fee set forth in 37 CFR 1.18(e). No additional fees are required.

Any request for reconsideration of the patent term adjustment indicated on the patent must be timely filed within 2 months after issuance pursuant to 37 CFR 1.705(d) and must include payment of the required fee under 37 CFR 1.18(e).

The Office of Data Management has been advised of this decision. This application is being referred to the Office of Data Management for issuance of the patent.

Telephone inquiries regarding this decision should be directed to Senior Attorney Paul Shanoski at (571) 272-3225.

Nancy Johnson
Senior Petitions Attorney
Office of Petitions

---

on which the application was filed and under 37 CFR 1.702(b) for Office failure to issue a patent within three years of the actual filing date of the application, then applicant must still timely file an application for patent term adjustment prior to the payment of the issue fee to contest the calculation of Office delay in issuing a first Office action or notice of allowance. See 37 CFR 1.705(b) and 35 U.S.C. 154(b)(3)(B). A dispute as to the calculation of the § 1.702(a)(1) period raised on request for reconsideration of patent term adjustment under 37 CFR 1.705(d) will be dismissed as untimely filed.

UNITED STATES PATENT AND TRADEMARK OFFICE

Commissioner for Patents
United States Patent and Trademark Office
P.O. Box 1450
Alexandria, VA 22313-1450
www.uspto.gov

FROMMER LAWRENCE & HAUG
745 FIFTH AVENUE - 10TH FL
NEW YORK NY 10151

COPY MAILED

SEP 12 2007

OFFICE OF PETITIONS

In re Application of	:	
Soll, et al.	:	
Application No. 11/580,731	:	ON PETITION
Filed: October 13, 2006	:	
Attorney Docket No. MER 04-024	:	

This is a decision on the petition to withdraw the holding of abandonment under 37 CFR 1.181, filed August 16, 2007.

The petition is **GRANTED**.

The holding of abandonment is **WITHDRAWN**.

This application was held abandoned for failure to timely file a response to the Notice to File Missing Parts, mailed October 31, 2006. This Office action set an extendable period for reply of two (2) months. No reply having been received, the application became abandoned on January 1, 2007. A Notice of Abandonment was mailed on July 5, 2007.

Petitioner contends that he did timely file a reply. A review of the reply reveals that it was directed to application No. 11/444,698. In addition, a review of application No. 11/444,698 indicates that the Office did receive a reply on May 3, 2007.

As set forth in the Manual of Patent Examining Procedure § 724.05:

> Where the Office can determine the correct application file that the papers were actually intended for, based on identifying information in the heading of the papers (e.g. application number, filing date, title of invention and inventor(s) name(s)), the Office will transfer the papers to the correct application file for which they were intended without the need of a petition.

Here, apart from the application number, the response did contain the correct identifying information (specifically the attorney docket number, the title of invention, the inventor, and the filing date). Moreover, the response did contain the correct application number in the top right hand margin. Accordingly, it is concluded that the Office could have determined the correct application file for which the response was intended.

In view thereof, the holding of abandonment is withdrawn.

The $130 surcharge for late submission of the declaration and the $2160 five month extension of time (necessary to make the May 3, 2007 response timely) have been charged to Deposit Account No. 50-2354, as authorized in the May 3, 2007 response.

The matter is being forwarded to the Office of Initial Patent Examination for pre-examination processing, using the response filed on May 3, 2007 (a copy of which has been supplied with the instant petition).

Telephone inquiries regarding this decision should be directed to the undersigned at (571)272-3207.

Cliff Congo
Petitions Attorney
Office of Petitions

UNITED STATES PATENT AND TRADEMARK OFFICE

Commissioner for Patents
United States Patent and Trademark Office
P.O. Box 1450
Alexandria, VA 22313-1450
www.uspto.gov

COPY MAILED

MAR 2 1 2008

OFFICE OF PETITIONS

MORRISON & FOERSTER LLP
755 PAGE MILL RD
PALO ALTO, CA 94304-1018

In re Application of	:	
Rongchang YAN, et al	:	
Application No. 11/580,735	:	DECISION ON PETITION
Filed: October 12, 2006	:	TO WITHDRAW
Attorney Docket No. 188122007800	:	FROM RECORD
	:	

This is a decision on the Request to Withdraw as attorney or agent of record under 37 C.F.R. § 1.36(b), filed February 8, 2008.

The request is **DISMISSED** as moot.

A review of the file record indicates that the power of attorney to Morrison & Forester LLP, has been revoked by the assignee of the patent application on March 12, 2008. Accordingly, the request to withdraw under 37 C.F.R. § 1.36(b) is moot.

The correspondence address of record has been changed and the new correspondence address is the address indicated below.

Telephone inquires concerning this decision should be directed to undersigned at 571-272- 6735.

Diane Goodwyn
Petitions Examiner
Office of Petitions

cc: THOMAS CHAN
WHEELOCK CHAN LLP
2880 ZANKER ROAD, SUITE 109
SAN JOSE, CA 95134

UNITED STATES PATENT AND TRADEMARK OFFICE

UNITED STATES DEPARTMENT OF COMMERCE
United States Patent and Trademark Office
Address: COMMISSIONER FOR PATENTS
P.O. Box 1450
Alexandria, Virginia 22313-1450
www.uspto.gov

Wheelock Chan LLP
2880 Zanker Road
Suite 109
San Jose, CA 95134

Mail Date: 04/21/2010

Applicant	: Rongchang Yan	: DECISION ON REQUEST FOR
Patent Number	: 7584440	: RECALCULATION of PATENT
Issue Date	: 09/01/2009	: TERM ADJUSTMENT IN VIEW
Appliction No	: 11/580,735	: OF WYETH AND NOTICE OF INTENT TO
Filed	: 10/12/2006	: ISSUE CERTIFICATE OF CORRECTION
		:

The Request for Recalculation is **GRANTED** to the extent indicated.

The patent term adjustment has been determined to be **54** days. The USPTO will *sua sponte* issue a certificate of correction reflecting the amount of PTA days determined by the recalculation.

Prior to the issuance of the certificate of correction, the USPTO will afford patentee an opportunity to be heard and request reconsideration. Accordingly, patentee has **one month or thirty (30) days**, whichever is longer, to file a request for reconsideration of this patent term adjustment calculation. See 35 U.S.C. 154(b)(3)(B)(ii) and 37 CFR 1.322(a)(4). No extensions of time will be granted under 37 CFR 1.136.

Patentee should use document code PET.OP if electronically filing a request for reconsideration of this patent term adjustment calculation. The patentee must also include the information required by 37 CFR 1.705(b)(2) and the fee required by 37 CFR 1.18(e). If patentee does not file a timely request for reconsideration of this patent term adjustment calculation including the information required by 37 CFR 1.705(b)(2) and the fee required by 37 CFR 1.18(e), the USPTO will issue a certificate of correction reflecting the PTA determination noted above.

Patentee should be aware that in order to preserve the right to review in the United States District Court for the District of Columbia of the USPTO patent term adjustment determination, patentee must ensure that he or she also take the steps required under 35 U.S.C. 154(b)(4)(A) in a timely manner. Nothing in the request for recalculation should be construed as providing an alternative time frame for commencing a civil action under 35 U.S.C. 154(b)(4)(A).

Any questions concerning this decision should be directed to the Office of Patent Legal Administration at 571-272-7702.

UNITED STATES PATENT AND TRADEMARK OFFICE

UNITED STATES DEPARTMENT OF COMMERCE
United States Patent and Trademark Office
Address: COMMISSIONER FOR PATENTS
P.O. Box 1450
Alexandria, Virginia 22313-1450
www.uspto.gov

H.C. PARK & ASSOCIATES, PLC
8500 LEESBURG PIKE
SUITE 7500
VIENNA, VA 22182

Mail Date: 04/20/2010

Applicant	: Yun-sik Jeon	: DECISION ON REQUEST FOR
Patent Number	: 7636845	: RECALCULATION of PATENT
Issue Date	: 12/22/2009	: TERM ADJUSTMENT IN VIEW
Appliction No	: 11/580,741	: OF WYETH AND NOTICE OF INTENT TO
Filed	: 10/12/2006	: ISSUE CERTIFICATE OF CORRECTION
		:

The Request for Recalculation is **GRANTED** to the extent indicated.

The patent term adjustment has been determined to be **483** days. The USPTO will *sua sponte* issue a certificate of correction reflecting the amount of PTA days determined by the recalculation.

Prior to the issuance of the certificate of correction, the USPTO will afford patentee an opportunity to be heard and request reconsideration. Accordingly, patentee has **one month or thirty (30) days**, whichever is longer, to file a request for reconsideration of this patent term adjustment calculation. See 35 U.S.C. 154(b)(3)(B)(ii) and 37 CFR 1.322(a)(4). No extensions of time will be granted under 37 CFR 1.136.

Patentee should use document code PET.OP if electronically filing a request for reconsideration of this patent term adjustment calculation. The patentee must also include the information required by 37 CFR 1.705(b)(2) and the fee required by 37 CFR 1.18(e). If patentee does not file a timely request for reconsideration of this patent term adjustment calculation including the information required by 37 CFR 1.705(b)(2) and the fee required by 37 CFR 1.18(e), the USPTO will issue a certificate of correction reflecting the PTA determination noted above.

Patentee should be aware that in order to preserve the right to review in the United States District Court for the District of Columbia of the USPTO patent term adjustment determination, patentee must ensure that he or she also take the steps required under 35 U.S.C. 154(b)(4)(A) in a timely manner. Nothing in the request for recalculation should be construed as providing an alternative time frame for commencing a civil action under 35 U.S.C. 154(b)(4)(A).

Any questions concerning this decision should be directed to the Office of Patent Legal Administration at 571-272-7702.

UNITED STATES PATENT AND TRADEMARK OFFICE

UNITED STATES DEPARTMENT OF COMMERCE
United States Patent and Trademark Office
Address: COMMISSIONER FOR PATENTS
P.O. Box 1450
Alexandria, Virginia 22313-1450
www.uspto.gov

TRASKBRITT, P.C.
P.O. BOX 2550
SALT LAKE CITY, UT 84110

Mail Date: 04/20/2010

Applicant	: Arie P. Otte	: DECISION ON REQUEST FOR
Patent Number	: 7655441	: RECALCULATION of PATENT
Issue Date	: 02/02/2010	: TERM ADJUSTMENT IN VIEW
Appliction No	: 11/580,760	: OF WYETH AND NOTICE OF INTENT TO
Filed	: 10/13/2006	: ISSUE CERTIFICATE OF CORRECTION
		:

The Request for Recalculation is **GRANTED** to the extent indicated.

The patent term adjustment has been determined to be **551** days. The USPTO will *sua sponte* issue a certificate of correction reflecting the amount of PTA days determined by the recalculation.

Prior to the issuance of the certificate of correction, the USPTO will afford patentee an opportunity to be heard and request reconsideration. Accordingly, patentee has **one month or thirty (30) days**, whichever is longer, to file a request for reconsideration of this patent term adjustment calculation. See 35 U.S.C. 154(b)(3)(B)(ii) and 37 CFR 1.322(a)(4). No extensions of time will be granted under 37 CFR 1.136.

Patentee should use document code PET.OP if electronically filing a request for reconsideration of this patent term adjustment calculation. The patentee must also include the information required by 37 CFR 1.705(b)(2) and the fee required by 37 CFR 1.18(e). If patentee does not file a timely request for reconsideration of this patent term adjustment calculation including the information required by 37 CFR 1.705(b)(2) and the fee required by 37 CFR 1.18(e), the USPTO will issue a certificate of correction reflecting the PTA determination noted above.

Patentee should be aware that in order to preserve the right to review in the United States District Court for the District of Columbia of the USPTO patent term adjustment determination, patentee must ensure that he or she also take the steps required under 35 U.S.C. 154(b)(4)(A) in a timely manner. Nothing in the request for recalculation should be construed as providing an alternative time frame for commencing a civil action under 35 U.S.C. 154(b)(4)(A).

Any questions concerning this decision should be directed to the Office of Patent Legal Administration at 571-272-7702.

UNITED STATES PATENT AND TRADEMARK OFFICE

UNITED STATES DEPARTMENT OF COMMERCE
United States Patent and Trademark Office
Address: COMMISSIONER FOR PATENTS
P.O. Box 1450
Alexandria, Virginia 22313-1450
www.uspto.gov

TEXAS INSTRUMENTS INCORPORATED
P O BOX 655474, M/S 3999
DALLAS, TX 75265

Mail Date: 06/24/2010

Applicant	: Yu Miao	: DECISION ON REQUEST FOR
Patent Number	: 7640471	: RECALCULATION of PATENT
Issue Date	: 12/29/2009	: TERM ADJUSTMENT IN VIEW
Application No	: 11/580,761	: OF WYETH AND NOTICE OF INTENT TO
Filed	: 10/13/2006	: ISSUE CERTIFICATE OF CORRECTION
		:

The Request for Recalculation is **GRANTED** to the extent indicated.

The patent term adjustment has been determined to be **470** days. The USPTO will *sua sponte* issue a certificate of correction reflecting the amount of PTA days determined by the recalculation.

Prior to the issuance of the certificate of correction, the USPTO will afford patentee an opportunity to be heard and request reconsideration. Accordingly, patentee has **one month or thirty (30) days**, whichever is longer, to file a request for reconsideration of this patent term adjustment calculation. See 35 U.S.C. 154(b)(3)(B)(ii) and 37 CFR 1.322(a)(4). No extensions of time will be granted under 37 CFR 1.136.

Patentee should use document code PET.OP if electronically filing a request for reconsideration of this patent term adjustment calculation. The patentee must also include the information required by 37 CFR 1.705(b)(2) and the fee required by 37 CFR 1.18(e). If patentee does not file a timely request for reconsideration of this patent term adjustment calculation including the information required by 37 CFR 1.705(b)(2) and the fee required by 37 CFR 1.18(e), the USPTO will issue a certificate of correction reflecting the PTA determination noted above.

Patentee should be aware that in order to preserve the right to review in the United States District Court for the District of Columbia of the USPTO patent term adjustment determination, patentee must ensure that he or she also take the steps required under 35 U.S.C. 154(b)(4)(A) in a timely manner. Nothing in the request for recalculation should be construed as providing an alternative time frame for commencing a civil action under 35 U.S.C. 154(b)(4)(A).

Any questions concerning this decision should be directed to the Office of Patent Legal Administration at 571-272-7702.

UNITED STATES PATENT AND TRADEMARK OFFICE

Commissioner for Patents
United States Patent and Trademark Office
P.O. Box 1450
Alexandria, VA 22313-1450
www.uspto.gov

MICHAEL SANDS SMITH
20199 ALPINE DR.
LAWRENCEBURG IN 47025

COPY MAILED

SEP 25 2008

OFFICE OF PETITIONS

In re Application of	:	
SMITH, Michael S.	:	
Application No. 11/580,769	:	DECISION ON PETITION
Filed: October 13, 2006	:	TO MAKE SPECIAL UNDER
Attorney Docket No. 209-06	:	37 CFR 1.102(c)(1)
	:	

This is a decision on the petition under 37 CFR 1.102(c)(1), filed August 01, 2008, to make the above-identified application special based on applicant's health as set forth in M.P.E.P. § 708.02, Section III.

The petition is **GRANTED**.

A grantable petition to make an application special under 37 CFR 1.102(c)(1) and MPEP § 708.02, Section III: Applicant's Health, must be accompanied by evidence showing such as a doctor's certificate or other medical certificate that the state of health of the applicant is such that he or she might not be available to assist in the prosecution of the application if it were to run its normal course. No fee is required

The instant petition includes doctor's certificate attesting to Michael Smith medical condition. Accordingly, the above-identified application has been accorded "special" status.

Telephone inquiries concerning this decision should be directed to Tredelle Jackson at 571-272-2783.

All other inquiries concerning either the examination or status of the application should be directed to the Technology Center.

The application is being forwarded to the Technology Center Art Unit 1797 for action on the merits commensurate with this decision.

Tredelle D. Jackson
Paralegal Specialist
Office of Petitions

UNITED STATES PATENT AND TRADEMARK OFFICE

COMMISSIONER FOR PATENTS
UNITED STATES PATENT AND TRADEMARK OFFICE
P.O. BOX 1450
ALEXANDRIA, VA 22313-1450
WWW.USPTO.GOV

Paper No. None

MORRISON & FOERSTER LLP
755 PAGE MILL RD
PALO ALTO CA 94304-1018

COPY MAILED

MAR 14 2007

OFFICE OF PETITIONS

In re Application of	:	
Thomas Wailes et al.	:	
Application No. 11/580,776	:	DECISION ON PETITION UNDER
Filed: October 13, 2006	:	37 C.F.R. §1.182
Attorney Docket No.:	:	
324212016000	:	
Title: METHOD AND SYSTEM FOR	:	
NAVIGATING A MAP	:	

This is a decision on the petition filed November 30, 2006, requesting that the above-identified application, including Figure 10c, be accorded a filing date of October 13, 2006 as part of the original disclosure.

The application was deposited on October 13, 2006. However, on October 27, 2006, the Office of Initial Patent Examination (OIPE) mailed a "Notice of Omitted Item(s) in a Nonprovisional Application" (notice), stating that the application had been accorded a filing date, and advising applicants that Figure 10c appeared to have been omitted on filing. The notice set a two-month period of reply.

In response, on November 30, 2006, applicants filed the present petition. The petition is further accompanied by a copy of Figure 10c, along with a copy of applicants' postcard receipt acknowledging receipt of "Drawings - 29 sheets" in the United States Patent and Trademark Office (Office) on October 13, 2006. Applicants request that Figure 10c be accorded a filing date of October 13, 2006.

Upon review of the electronic file, 28 sheets of drawings, containing Figures 1a - 10b and 11, have been located. Figure

10c has not been located among the application papers. However, the evidence is convincing that the application papers deposited on October 13, 2006 included a drawing sheet containing Figure 10c, and this sheet was subsequently misplaced in the Office.

Therefore, the application, including Figure 10c, was complete on filing and entitled to a filing date of October 13, 2006 as part of the original disclosure.

Accordingly, the petition under 37 C.F.R. §1.182 is **GRANTED**.

The notice mailed October 27, 2006 was sent in error, and is hereby **VACATED**. Therefore, no petition fee is necessary, and the petition fee will be refunded to Petitioner's Deposit Account in due course.

OIPE will be advised to process the application with a filing date of October 13, 2006, using the original application papers filed on that date, as well as Figure 10c submitted on November 30, 2006, and for noting in Office records that the sheet containing Figure 10c was present on filing.

Telephone inquiries regarding this decision should be directed to the undersigned at (571) 272-3225. All other inquiries concerning examination procedures or status of the application should be directed to the Technology Center.

Paul Shanoski
Senior Attorney
Office of Petitions
United States Patent and Trademark Office

UNITED STATES PATENT AND TRADEMARK OFFICE

Commissioner for Patents
United States Patent and Trademark Office
P.O. Box 1450
Alexandria, VA 22313-1450
www.uspto.gov

MAILED

MAY 20 2010

OFFICE OF PETITIONS

YAHOO C/O MOFO PALO ALTO
755 PAGE MILL ROAD
PALO ALTO, CA 94304

In re Application of	:	
Wailes et al.	:	DECISION ON PETITION
Application No. 11/580,776	:	TO WITHDRAW
Filed: October 13, 2006	:	FROM RECORD
Attorney Docket No. 085804-721406	:	

This is a decision on the Request to Withdraw as attorney or agent of record under 37 C.F.R. § 1.36(b), filed March 23, 2010.

The request is **NOT APPROVED** because it is moot.

A review of the file record indicates that on April 26, 2010 the power of attorney to YAHOO C/O MOFO PALO ALTO was revoked by the assignee of the patent application. Accordingly, the request to withdraw under 37 C.F.R. § 1.36(b) is moot.

All future communications from the Office will be directed to the below-listed address until otherwise notified by applicant.

Telephone inquires concerning this decision should be directed to the undersigned at 571-272-7751. All other inquires concerning either the examination or status of the application should be directed to the Technology Center.

Joan Olszewski
Petitions Examiner
Office of Petitions

cc: YAHOO! INC. C/O GREENBERG TRAURIG, LLP
MET LIFE BUILDING
200 PARK AVENUE
NEW YORK NY 10166

UNITED STATES PATENT AND TRADEMARK OFFICE

UNITED STATES DEPARTMENT OF COMMERCE
United States Patent and Trademark Office
Address: COMMISSIONER FOR PATENTS
P.O. Box 1450
Alexandria, Virginia 22313-1450
www.uspto.gov

APPLICATION NO.	FILING DATE	FIRST NAMED INVENTOR	ATTORNEY DOCKET NO.	CONFIRMATION NO.
11/580,799	10/13/2006	Simon G. Handley	10060085-01	5949

7590 11/27/2009
AGILENT TECHNOLOGIES INC.
INTELLECTUAL PROPERTY ADMINISTRATION,LEGAL DEPT.
MS BLDG. E P.O. BOX 7599
LOVELAND, CO 80537

EXAMINER
ALLISON, ANDRAE S

ART UNIT	PAPER NUMBER
2624	

NOTIFICATION DATE	DELIVERY MODE
11/27/2009	ELECTRONIC

DECISION GRANTING PETITION UNDER 37 CFR 1.138(d)

The declaration of express abandonment is recognized

This is in response to the petition under 37 CFR 1.138(d), requesting for a refund of any previously paid search fee and excess claims fee in the above-identified application.

The petition is granted.

The express abandonment is recognized. Any previously paid search fee and excess claims fee are hereby refunded.

Telephone inquiries should be directed to the Office of Data Management at (571) 272-4200.

Nimi Farmer

Patent Publication Branch
Office of Data Management

Adjustment date: 11/25/2009 NFARMER
10/17/2006 YPCLITE1 00000064 501078 11580799
02 FC:1111 530.00 CR

FORM PET651G (Rev. 08/07)

UNITED STATES PATENT AND TRADEMARK OFFICE

Commissioner for Patents
United States Patent and Trademark Office
P.O. Box 1450
Alexandria, VA 22313-1450
www.uspto.gov

ROPES & GRAY LLP
PATENT DOCKETING 39/41
ONE INTERNATIONAL PLACE
BOSTON MA 02110-2624

COPY MAILED
JUN 30 2008
OFFICE OF PETITIONS

In re Application of	:	
Barger, et al.	:	
Application No. 11/580,804	:	ON PETITION
Filed: October 13, 2006	:	
Attorney Docket No. BBNT-P02-350	:	

This is a decision on the petition to revive under 37 CFR 1.137(b), filed May 6, 2008.

The petition under 37 CFR 1.137(b) is **GRANTED**.

The above-identified application became abandoned for failure to timely pay the issue fee in response to the Notice of Allowance, mailed on November 30, 2007. This Notice set a statutory period for reply of three (3) months. No issue fee having been received, the application became abandoned on March 1, 2008. The Office mailed a Notice of Abandonment on April 30, 2008.

With the instant petition, petitioner paid the petition, issue, and publication fees, and made the proper statement of unintentional delay.

The application is being forwarded to the Office of Data Management for processing into a patent.

Telephone inquiries related to this decision should be directed to the undersigned at (571)272-3207.

Cliff Congo
Petitions Attorney
Office of Petitions

UNITED STATES PATENT AND TRADEMARK OFFICE

Commissioner for Patents
United States Patent and Trademark Office
P.O. Box 1450
Alexandria, VA 22313-1450
www.uspto.gov

COPY MAILED
NOV 2 0 2006
OFFICE OF PETITIONS

ABELMAN, FRAYNE & SCHWAB
666 THIRD AVENUE, 10TH FLOOR
NEW YORK, NY 10017

In re Application of	:	
Asfar, et al.	:	
Application No. 11/580,809	:	DECISION GRANTING PETITION
Filed: October 13, 2006	:	
Attorney Docket No. 207,359	:	

This is a decision on the petition filed November 10, 2006, under 37 CFR 1.10(c) requesting that the above-cited application be accorded a filing date of October 12, 2006, rather than the presently accorded filing date of October 13, 2 006.

Petitioner alleges that the application was deposited with the Express Mail Service on October 12, 2006. In support of the allegation, the petition is accompanied by a copy of the Express Mail tracking sheet with a tracking number ER059677105US showing a "date-in" of October 12, 2006. The tracking number cited is the same number found on the application transmittal sheet that accompanied the original application papers. The evidence is convincing that the application papers were deposited on October 12, 2006.

In view of the above, the petition is granted. The new filing date for the above-cited application is October 12, 2006.

The Office of Initial Patent Examination will further process the application with a filing date of October 12, 2006, and issue a corrected filing receipt.

Any inquiries related to this decision should be directed to the undersigned at (571)272-3222.

Kenya A. McLaughlin
Petitions Attorney
Office of Petitions

UNITED STATES PATENT AND TRADEMARK OFFICE

UNITED STATES DEPARTMENT OF COMMERCE
United States Patent and Trademark Office
Address: COMMISSIONER FOR PATENTS
P.O. Box 1450
Alexandria, Virginia 22313-1450
www.uspto.gov

APPLICATION NO.	FILING DATE	FIRST NAMED INVENTOR	ATTORNEY DOCKET NO.	CONFIRMATION NO.
11/580,834	10/16/2006	Narsingh Bahadur Singh	166773	6511

7590 04/22/2008
ANDREWS KURTH LLP
Intellectual Property Department
Suite 1100
1350 I Street, N.W.
Washington, DC 20005

EXAMINER
NORTON, NADINE GEORGIANNA

ART UNIT	PAPER NUMBER
1792	

MAIL DATE	DELIVERY MODE
04/22/2008	PAPER

DECISION GRANTING PETITION UNDER 37 CFR 1.138(d)

The declaration of express abandonment is recognized

This is in response to the petition under 37 CFR 1.138(d), requesting for a refund of any previously paid search fee and excess claims fee in the above-identified application.

The petition is granted.

The express abandonment is recognized. Any previously paid search fee and excess claims fee are hereby refunded.

Telephone inquiries should be directed to the Office of Data Management at (571) 272-4200.

Patent Publication Branch
Office of Data Management

Adjustment date: 04/22/2008 DTERRY
10/17/2006 HGUTEMA1 00000078 502849 11580834
02 FC:1111 500.00 CR

FORM PET651G (Rev. 08/07)

RAM Fee History Query

Revenue Accounting and Management

Name/Number: 11580834

Total Records Found: 4

Start Date: Any Date

End Date: Any Date

Accounting Date	Sequence Num.	Fee Type	Fee Code	Fee Amount	Mailroom Date	Payment Method
10/19/2006	00000070	1	8021	$40.00	10/16/2006	DA 502849
10/17/2006	00000277	1	1011	$300.00	10/16/2006	DA 502849
10/17/2006	00000278	1	1111	$500.00	10/16/2006	DA 502849
10/17/2006	00000279	1	1311	$200.00	10/16/2006	DA 502849

UNITED STATES PATENT AND TRADEMARK OFFICE

UNITED STATES DEPARTMENT OF COMMERCE
United States Patent and Trademark Office
Address: COMMISSIONER FOR PATENTS
P.O. Box 1450
Alexandria, Virginia 22313-1450
www.uspto.gov

APPLICATION NO.	FILING DATE	FIRST NAMED INVENTOR	ATTORNEY DOCKET NO.	CONFIRMATION NO.
11/580,834	10/16/2006	Narsingh Bahadur Singh	166773	6511

7590 04/22/2008
ANDREWS KURTH LLP
Intellectual Property Department
Suite 1100
1350 I Street, N.W.
Washington, DC 20005

EXAMINER
NORTON, NADINE GEORGIANNA

ART UNIT	PAPER NUMBER
1792	

MAIL DATE	DELIVERY MODE
04/22/2008	PAPER

DECISION DISMISSING PETITION UNDER 37 CFR 1.138(c)

The declaration of express abandonment will not be recognized

This is in response to the petition under 37 CFR 1.138(c), for express abandonment to avoid publication of the above-identified application.

The petition is dismissed.

The express abandonment will **not** be recognized for the reason(s) indicated below:

1. ☒ The petition under 37 CFR 1.138(c) was not filed in sufficient time to permit the appropriate officials to recognize the abandonment and remove the application from the publication process.
2. ☐ The petition was not signed by a party authorized by 37 CFR 1.33(b)(1), (3) or (4).
3. ☐ The Application was published in compliance with 35 U.S.C. 122(b), and it is available on the USPTO web site at http://www.uspto.gov/patft/index.html.
4. ☐ Petition fee was not paid.

The application **has/will be published** as scheduled.

Telephone inquiries should be directed to the Office of Data Management at (571) 272-4200.

Patent Publication Branch
Office of Data Management

FORM PET650D (Rev. 08/07)

SPE RESPONSE FOR CERTIFICATE OF CORRECTION

Paper No.: _____

DATE : 11/06/09

TO SPE OF : ART UNIT 1645

SUBJECT : Request for Certificate of Correction for Appl. No.: 11580845 Patent No.: 7599057

Please respond to this request for a certificate of correction within 7 days.

FOR IFW FILES:

Please review the requested changes/corrections as shown in the **COCIN** document(s) in the IFW application image. No new matter should be introduced, nor should the scope or meaning of the claims be changed.

Please complete the response (see below) and forward the completed response to scanning using document code **COCX**.

FOR PAPER FILES:

Please review the requested changes/corrections as shown in the attached certificate of correction. Please complete this form (see below) and forward it with the file to:

Certificates of Correction Branch (C of C)
Randolph Square 9C62-D
Palm Location 7580

You can fax the Directors/SPE response to 571-270-9990

Lamonte Newsome
Certificates of Correction Branch
703-756-1574

Thank You For Your Assistance

The request for issuing the above-identified correction(s) is hereby:
Note your decision on the appropriate box.

☒ **Approved**	**All** changes apply.
☐ **Approved in Part**	Specify below which changes **do not** apply.
☐ **Denied**	State the reasons for denial below.

Comments: _____

ROBERT MONDESI
SUPERVISORY PATENT EXAMINER

SPE

1645
Art Unit

UNITED STATES PATENT AND TRADEMARK OFFICE

UNITED STATES DEPARTMENT OF COMMERCE
United States Patent and Trademark Office
Address: COMMISSIONER FOR PATENTS
P.O. Box 1450
Alexandria, Virginia 22313-1450
www.uspto.gov

APPLICATION NO.	FILING DATE	FIRST NAMED INVENTOR	ATTORNEY DOCKET NO.	CONFIRMATION NO.
11/580,921	10/16/2006	Jung-hwan Oh	0007.1040	6664

7590 09/10/2008
STEIN, MCEWEN & BUI, LLP
1400 EYE STREET, NW
SUITE 300
WASHINGTON, DC 20005

EXAMINER
DASTOURI, MEHRDAD

ART UNIT	PAPER NUMBER
2621	

MAIL DATE	DELIVERY MODE
09/10/2008	PAPER

DECISION GRANTING PETITION UNDER 37 CFR 1.138(d)

The declaration of express abandonment is recognized

This is in response to the petition under 37 CFR 1.138(d), requesting for a refund of any previously paid search fee and excess claims fee in the above-identified application.

The petition is granted.

The express abandonment is recognized. Any previously paid search fee and excess claims fee are hereby refunded.

Telephone inquiries should be directed to the Office of Data Management at (571) 272-4200.

Nioni Farmer

Patent Publication Branch
Office of Data Management

Refund Ref:
09/10/2008 0030060904

Credit Card Refund Total: $750.00

Am Exp..: XXXXXXXXXXX1001

Adjustment date: 09/10/2008 NFARMER
10/18/2006 DEMMANU1 00000027 11580921
02 FC:1111 -500.00 OP
04 FC:1202 -250.00 OP

FORM PET651G (Rev. 08/07)

UNITED STATES PATENT AND TRADEMARK OFFICE

Commissioner for Patents
United States Patent and Trademark Office
P.O. Box 1450
Alexandria, VA 22313-1450
www.uspto.gov

OBLON, SPIVAK, MCCLELLAND MAIER & NEUSTADT, P.C.
1940 DUKE STREET
ALEXANDRIA VA 22314

COPY MAILED

JUN 19 2008

OFFICE OF PETITIONS

In re Application of	:	
Tetsuya Suga et al	:	
Application No. 11/580,936	:	DECISION GRANTING PETITION
Filed: October 16, 2006	:	UNDER 37 CFR 1.313(c)(2)
Attorney Docket No. 297698USO CONT	:	

This is a decision on the petition under 37 CFR 1.313(c)(2), filed June 18, 2008, to withdraw the above-identified application from issue after payment of the issue fee.

The petition is **GRANTED**.

The above-identified application is withdrawn from issue for consideration of a submission under 37 CFR 1.114 (request for continued examination). *See* 37 CFR 1.313(c)(2).

Petitioner is advised that the issue fee paid on May 21, 2008 cannot be refunded. If, however, this application is again allowed, petitioner may request that it be applied towards the issue fee required by the new Notice of Allowance.[1]

Telephone inquiries should be directed to the undersigned at (571) 272-3208.

This application is being referred to Technology Center AU 1657 for processing of the request for continued examination under 37 CFR 1.114 and for consideration of the concurrently filed IDS.

Karen Creasy

Karen Creasy
Petitions Examiner
Office of Petitions

---

[1] *The request to apply the issue fee to the new Notice may be satisfied by completing and returning the new Part B – Fee(s) Transmittal Form (along with any balance due at the time of submission). Petitioner is advised that the Issue Fee Transmittal Form* ***must*** *be completed and timely submitted to avoid abandonment of the application.*

UNITED STATES PATENT AND TRADEMARK OFFICE

UNITED STATES DEPARTMENT OF COMMERCE
United States Patent and Trademark Office
Address: COMMISSIONER FOR PATENTS
P.O. Box 1450
Alexandria, Virginia 22313-1450
www.uspto.gov

APPLICATION NO.	FILING DATE	FIRST NAMED INVENTOR	ATTORNEY DOCKET NO.	CONFIRMATION NO.
11/580,973	10/13/2006	Zohar Yakhini	10051474-1	6744

7590 11/27/2009
AGILENT TECHNOLOGIES INC.
INTELLECTUAL PROPERTY ADMINISTRATION,LEGAL DEPT.
MS BLDG. E P.O. BOX 7599
LOVELAND, CO 80537

EXAMINER
ZHOU, SHUBO

ART UNIT	PAPER NUMBER
1631	

NOTIFICATION DATE	DELIVERY MODE
11/27/2009	ELECTRONIC

DECISION GRANTING PETITION UNDER 37 CFR 1.138(d)

The declaration of express abandonment is recognized

This is in response to the petition under 37 CFR 1.138(d), requesting for a refund of any previously paid search fee and excess claims fee in the above-identified application.

The petition is granted.

The express abandonment is recognized. Any previously paid search fee and excess claims fee are hereby refunded.

Telephone inquiries should be directed to the Office of Data Management at (571) 272-4200.

Mimi Farmer

Patent Publication Branch
Office of Data Management

Adjustment date: 11/25/2009 MFARMER
10/18/2006 DEMMANU1 00000078 501078 11580973
02 FC:1111 500.00 CR

FORM PET651G (Rev. 08/07)

UNITED STATES PATENT AND TRADEMARK OFFICE

UNITED STATES DEPARTMENT OF COMMERCE
United States Patent and Trademark Office
Address: COMMISSIONER FOR PATENTS
P.O. Box 1450
Alexandria, Virginia 22313-1450
www.uspto.gov

APPLICATION NO.	FILING DATE	FIRST NAMED INVENTOR	ATTORNEY DOCKET NO.	CONFIRMATION NO.
11/581,031	10/16/2006	Koutarou Yoshihara	129795	6197

25944 7590 06/03/2010
OLIFF & BERRIDGE, PLC
P.O. BOX 320850
ALEXANDRIA, VA 22320-4850

EXAMINER
RODEE, CHRISTOPHER D

ART UNIT	PAPER NUMBER
1795	

NOTIFICATION DATE	DELIVERY MODE
06/03/2010	ELECTRONIC

Please find below and/or attached an Office communication concerning this application or proceeding.

The time period for reply, if any, is set in the attached communication.

Notice of the Office communication was sent electronically on above-indicated "Notification Date" to the following e-mail address(es):

OfficeAction25944@oliff.com
jarmstrong@oliff.com

UNITED STATES PATENT AND TRADEMARK OFFICE

Commissioner for Patents
United States Patent and Trademark Office
P.O. Box 1450
Alexandria, VA 22313-1450
www.uspto.gov

Mailed: 6/3/10

Re application of:
Yoshihara et al.
Serial No.: 11/581,031
Filed: October 16, 2006
For: ELECTROSTATIC LATENT IMAGE CARRIER, ELECTROSTATIC LATENT IMAGE DEVELOPER AND IMAGE FORMING APPARATUS

DECISION ON PETITION

This is a decision on the PETITION FOR ACCEPTANCE OF COLOR DRAWINGS AND PHOTOGRAPHS UNDER 37 C.F.R. 1.84(a)(2) AND (b)(1), filed December 3, 2009. Requirements for the granting of this petition include the following: (1) the fee as required by 37 CFR 1.17(h), (2) three sets of the color drawings, (3) an amendment to the specification which includes the language set forth in 37 CFR 1.84(a)(2)(iii), and (4) an explanation stating why color drawings are necessary.

Petitioner has paid the fee and submitted three sets of the color drawings and provided the required explanation. However, the specification has not been amended to include the language set forth in 37 CFR 1.84(a)(2)(iii). The specified rule subsection is reproduced below:

> (iii) An amendment to the specification to insert (unless the specification contains or has been previously amended to contain) the following language as the first paragraph of the brief description of the drawings:
>
> "The patent or application file contains at least one drawing executed in color. Copies of this patent or patent application publication with color drawing(s) will be provided by the Office upon request and payment of the necessary fee."

Petitioner is requested to submit an amendment with the required language. Upon entry of the amendment, the petition decision will be reconsidered.

The Petition is **DISMISSED**.

Mark F. Huff
Supervisory Patent Examiner
Group Art Unit 1795

Oliff & Berridge, PLC
P.O. Box 320850
Alexandria, VA 22320-4850

UNITED STATES PATENT AND TRADEMARK OFFICE

Commissioner for Patents
United States Patent and Trademark Office
P.O. Box 1450
Alexandria, VA 22313-1450
www.uspto.gov

YOUSEF DANESHVAR, MD. FACC.
3425 LONE PINE RD.
WEST BLOOMFIELD MI 48323

COPY MAILED

MAY 26 2009

OFFICE OF PETITIONS

In re Application of	:	
Daneshvar	:	
Application No. 11/581,045	:	DECISION
Filed: 13 October, 2006	:	
Attorney Docket No. (None)	:	

This is a decision on the petition, filed on 30 March, 2009, for revival of an application abandoned due to unavoidable delay under 37 C.F.R. §1.137(a)—and in light of the averment of nonreceipt is considered as a request for withdrawal of the holding of abandonment pursuant to 37 C.F.R. §1.181.

The petition under 37 C.F.R. §1.137(a) is **DISMISSED**; and the petition under 37 C.F.R. §1.181 is **DISMISSED**.

Any further petition to revive must be submitted within TWO (2) MONTHS from the mail date of this decision. Extensions of time under 37 C.F.R. §1.136(a) are permitted. The reconsideration request should include a cover letter entitled "Renewed Petition under 37 C.F.R. §1.137(a)."

This is **not** a final agency action within the meaning of 5 U.S.C.§704.

If Petitioner does not have the documentary support required herein, Petitioner's only alternative is to file a petition pursuant to 37 C.F.R. §1.137(b), discussed below.

As to Allegation of
Unavoidable Delay

The requirements of a grantable petition pursuant to 37 C.F.R. §1.137(a) are the petition and fee therefor, a reply, a proper showing of unavoidable delay under the regulation, and, where applicable, a terminal disclaimer and fee. (However, it does not appear that a terminal disclaimer and fee are due here.)

Petitioner does not appear to have satisfied the showing requirements as to unavoidable delay (*see*: MPEP §711.03(c), to wit: to support with documentary evidence the averment of unavoidable delay (his nonreceipt).

As to the Request to Withdraw
the Holding of Abandonment

Petitioner's attention is directed to the guidance in the Commentary at MPEP §711.03(c)(I) for guidance as to the proper showing and timeliness requirements for relief under 37 C.F.R. §1.181.

Petitioner is reminded that all transactions before the Office are in writing (see: 37 C.F.R. §1.2[1]) and no telephone conversations might be alleged to be the basis for any action taken by Petitioner in this or any other matter.

Petitioner appears not to satisfy the showing requirements set forth in the guidance in the Commentary at MPEP §711.03(c)(I).

Petitioners' attentions always are directed to the guidance set forth in the Commentary at MPEP §711.03(c)(I)—and with particularity to the requirements therein including statements of non-receipt at the address of record, search and non-discovery, with a description of docketing system and a statement of its reliability, and support for those the statements with copies of the docket record/file jacket cover and due date calendar/docket. (Further, the regulations at 37 C.F.R. §1.181 require that a Petitioner seek relief thereunder within two (2) months of the act complained of.)

BACKGROUND

The record reflects as follows:

Petitioner failed to reply timely and properly to the 2 November, 2006, Notice to File Corrected Application Papers, with reply due absent extension of time on or before 2 January, 2007.

The application went abandoned after midnight 2 January, 2007.

The Office mailed the Notice of Abandonment on 6 July, 2007.

---

[1] The regulations at 37 C.F.R. §1.2 provide:
§1.2 Business to be transacted in writing.
All business with the Patent and Trademark Office should be transacted in writing. The personal attendance of applicants or their attorneys or agents at the Patent and Trademark Office is unnecessary. The action of the Patent and Trademark Office will be based exclusively on the written record in the Office. No attention will be paid to any alleged oral promise, stipulation, or understanding in relation to which there is disagreement or doubt.

On 30 March, 2009, Petitioner (*pro se*) filed a petition (with fee) pursuant to 37 C.F.R. §1.137(a), averring unavoidable delay, with a reply in the form of corrected application papers. Further, Petitioner argues that:

- Petitioner's delay was unavoidable because he received neither the 2 November, 2006 Notice to File Corrected Application Papers nor the 6 July, 2007, Notice of Abandonment;

- Petitioner avers that "it is not unusual for us to receive mail that belongs to other people—we consider it as a human or machine error"; and

- Petitioner submits the unsigned statement of practitioner George L. Boller (Reg. No. 26,258)—as one registered to practice before the Office, Mr. Boller is aware that unsigned papers are not acceptable. (*See*: 37 C.F.R. §1.4)

While the Office does not doubt the veracity of Petitioner, the requirements of the Rules of Practice apply to all who practice before the Office—whether registered practitioner or *pro se* applicant. If Petitioner has experienced a history of erroneous delivery and/or non-delivery of mail, the statutory (and therefore non-waivable) requirement for Petitioner to be timely in response to Office actions may compel Petitioner to consider other alternatives for receipt of mail.

The showing and timeliness requirements for relief pursuant to 37 C.F.R. §1.181 can be found at the guidance in the Commentary at MPEP §711.03(c)(I): http://www.uspto.gov/web/offices/pac/mpep/documents/0700_711_03_c.htm#sect711.03c ; and the showing requirements for relief pursuant to 37 C.F.R. §1.137(a) can be found at the guidance in the Commentary at MPEP §711.03(c)(II): also located at http://www.uspto.gov/web/offices/pac/mpep/documents/0700_711_03_c.htm#sect711.03c .

The requirement of diligence in practice before the Office dates back more than a century, to wit: "no more or greater care or diligence than is generally used and observed by prudent and careful men in relation to their most important business.[2] (Emphasis supplied.)

Petitioner's attention is directed to the guidance in the Commentary at MPEP §711.03(c)(I)) generally to satisfy the mandated showings pursuant to 37 C.F.R. §1.181:

---

[2] In re Mattullath, 38 App. D.C. 497, 514-15 (1912)(quoting Ex parte Pratt, 1887 Dec. Comm'r Pat. 31, 32-33 (1887)); see also Winkler v. Ladd, 221 F. Supp. 550, 552, 138 USPQ 666, 167-68 (D.D.C. 1963), aff'd, 143 USPQ 172 (D.C. Cir. 1963); Ex parte Henrich, 1913 Dec. Comm'r Pat. 139, 141 (1913). In addition, decisions on revival are made on a "case-by-case basis, taking all the facts and circumstances into account." Smith v. Mossinghoff, 671 F.2d 533, 538, 213 USPQ 977, 982 (D.C. Cir. 1982). Finally, a petition cannot be granted where a petitioner has failed to meet his or her burden of establishing that the delay was "unavoidable." Haines v. Quigg, 673 F. Supp. 314, 316-17, 5 USPQ2d 1130, 1131-32 (N.D. Ind. 1987).

***

> The showing required to establish nonreceipt of an Office communication must include a statement from the practitioner describing the system used for recording an Office action received at the correspondence address of record with the USPTO. The statement should establish that the docketing system is sufficiently reliable. It is expected that the record would include, but not be limited to, the application number, attorney docket number, the mail date of the Office action and the due date for the response.
>
> Practitioner must state that the Office action was not received at the correspondence address of record, and that a search of the practitioner's record(s), including any file jacket or the equivalent, and the application contents, indicates that the Office action was not received. A copy of the record(s) used by the practitioner where the non-received Office action would have been entered had it been received is required.
>
> A copy of the practitioner's record(s) required to show non-receipt of the Office action should include the master docket for the firm. That is, if a three month period for reply was set in the nonreceived Office action, a copy of the master docket report showing all replies docketed for a date three months from the mail date of the nonreceived Office action must be submitted as documentary proof of nonreceipt of the Office action. If no such master docket exists, the practitioner should so state and provide other evidence such as, but not limited to, the following: the application file jacket; incoming mail log; calendar; reminder system; or the individual docket record for the application in question.[3]

***

Thus, as indicated earlier in this decision (see the discussion immediately before and within the BACKGROUND and with more particularity the excerpt from the MPEP, above), the guidance in the Commentary at MPEP §711.03(c)(I)) sets forth a particular set of statements (e.g., docketing system sufficiently reliable) and documents (e.g., due-date calendar/due-date docket for the firm) that must be provided by Petitioner to satisfy the mandated showings pursuant to 37 C.F.R. §1.181. This Petitioner has failed to do.

Out of an abundance of caution, Petitioners always are reminded that the filing of a petition under 37 C.F.R. §1.181 does not toll any periods that may be running any action by the Office and a petition seeking relief under the regulation must be filed within two (2) months of the act complained of (*see*: 37 C.F.R. §1.181(f)), and those registered to practice and all others who make representations before the Office **must** inquire into the underlying facts of representations made to the Office and support averments with the appropriate documentation–since all owe to the Office the continuing duty to disclose.[4]

---

[3] *See*: MPEP §711.03(c) (I)(A).

[4] See supplement of 17 June, 1999. The Patent and Trademark Office is relying on Petitioner's duty of candor and good faith and accepting a statement made by Petitioner. See Changes to Patent Practice and Procedure, 62 Fed. Reg. at 53160 and 53178, 1203 Off. Gaz. Pat. Office at 88

The availability of applications and application papers online to applicants/practitioners who diligently associate their Customer Number with the respective application(s) now provides an applicant/practitioner on-demand information as to events/transactions in an application.

STATUTES, REGULATIONS

Congress has authorized the Commissioner to "revive an application if the delay is shown to the satisfaction of the Commissioner to have been "unavoidable." 35 U.S.C. §133 (1994).

Decisions on reviving abandoned applications on the basis of "unavoidable" delay have adopted the reasonably prudent person standard in determining if the delay was unavoidable:

> The word 'unavoidable' . . . is applicable to ordinary human affairs, and requires no more or greater care or diligence than is generally used and observed by prudent and careful men in relation to their most important business. It permits them in the exercise of this care to rely upon the ordinary and trustworthy agencies of mail and telegraph, worthy and reliable employees, and such other means and instrumentalities as are usually employed in such important business. If unexpectedly, or through the unforeseen fault or imperfection of these agencies and instrumentalities, there occurs a failure, it may properly be said to be unavoidable, all other conditions of promptness in its rectification being present.[5]

As to Allegations of Unavoidable Delay

The requirements under 37 C.F.R. §1.137(a) have not been satisfied as of this writing in that Petitioner failed to make the showing of unavoidable delay and provide a reply to the Office action as required.

As of this writing Petitioner has failed to support the allegation of unavoidable delay.

---

and 103 (responses to comments 64 and 109)(applicant obligated under 37 C.F.R. §10.18 to inquire into the underlying facts and circumstances when providing statements to the Patent and Trademark Office).

[5] In re Mattullath, 38 App. D.C. 497, 514-15 (1912)(quoting Ex parte Pratt, 1887 Dec. Comm'r Pat. 31, 32-33 (1887)); see also Winkler v. Ladd, 221 F. Supp. 550, 552, 138 USPQ 666, 167-68 (D.D.C. 1963), aff'd, 143 USPQ 172 (D.C. Cir. 1963); Ex parte Henrich, 1913 Dec. Comm'r Pat. 139, 141 (1913). In addition, decisions on revival are made on a "case-by-case basis, taking all the facts and circumstances into account." Smith v. Mossinghoff, 671 F.2d 533, 538, 213 USPQ 977, 982 (D.C. Cir. 1982). Finally, a petition cannot be granted where a petitioner has failed to meet his or her burden of establishing that the delay was "unavoidable." Haines v. Quigg, 673 F. Supp. 314, 316-17, 5 USPQ2d 1130, 1131-32 (N.D. Ind. 1987).

Allegations as to the Request to
Withdraw the Holding of Abandonment

The guidance in the Commentary at MPEP §711.03(c)(I) specifies the showing required and how it is to be made and supported.

Petitioner appears not to have made the showing required.

CONCLUSION

Accordingly, the petition under 37 C.F.R. §1.137(a) is **dismissed**; and the petition under 37 C.F.R. §1.181 is **dismissed**.

ALTERNATIVE VENUE

Should Petitioner wish to revive the application, Petitioner may wish to properly file a petition to the Commissioner requesting revival of an application abandoned due to unintentional delay under 37 C.F.R. §1.137(b). (See: http://www.uspto.gov/web/offices/pac/mpep/documents/0700_711_03_c.htm#sect711.03c)

A petition to revive on the grounds of unintentional delay must be filed promptly and such petition must be accompanied by the reply, the petition fee, a statement that "the entire delay in filing the required reply from the due date for the reply until the filing of a grantable petition was unintentional," and a terminal disclaimer and fee where appropriate. (The statement is in the form available online.)

Further correspondence with respect to this matter should be addressed as follows:

By Mail: Mail Stop PETITION
Commissioner for Patents
P. O. Box 1450
Alexandria, VA 22313-1450

By hand: U. S. Patent and Trademark Office
Customer Service Window, Mail Stop Petitions
Randolph Building
401 Dulany Street
Alexandria, VA 22314

By facsimile: **(571) 273-8300**
Attn: Office of Petitions

Telephone inquiries regarding this decision may be directed to the undersigned at (571) 272-3214—it is noted, however, that all practice before the Office is in writing (see: 37 C.F.R. §1.2[6]) and the proper authority for action on any matter in this regard are the statutes (35 U.S.C.), regulations (37 C.F.R.) and the commentary on policy (MPEP). Therefore, no telephone discussion may be controlling or considered authority for Petitioner's action(s).

/John J. Gillon, Jr./
John J. Gillon, Jr.
Senior Attorney
Office of Petitions

[6] The regulations at 37 C.F.R. §1.2 provide:
§1.2 Business to be transacted in writing.
All business with the Patent and Trademark Office should be transacted in writing. The personal attendance of applicants or their attorneys or agents at the Patent and Trademark Office is unnecessary. The action of the Patent and Trademark Office will be based exclusively on the written record in the Office. No attention will be paid to any alleged oral promise, stipulation, or understanding in relation to which there is disagreement or doubt.

UNITED STATES PATENT AND TRADEMARK OFFICE

Commissioner for Patents
United States Patent and Trademark Office
P.O. Box 1450
Alexandria, VA 22313-1450
www.uspto.gov

YOUSEF DANESHVAR, MD. FACC.
3425 LONE PINE RD.
WEST BLOOMFIELD MI 48323

COPY MAILED

SEP 21 2009

OFFICE OF PETITIONS

In re Application of :
Daneshvar :
Application No. 11/581,045 : DECISION
Filed: 13 October, 2006 :
Attorney Docket No. (None) :

This is a decision on the petition, filed on 23 June, 2009, for revival of an application abandoned due to unintentional delay under 37 C.F.R. §1.137(b).

The petition under 37 C.F.R. §1.137(b) is **GRANTED**.

As to the Allegations
of Unintentional Delay

The requirements of a grantable petition pursuant to 37 C.F.R. §1.137(b) are the petition and fee therefor, a reply, a proper statement of unintentional delay under the regulation, and, where applicable, a terminal disclaimer and fee. (However, it does not appear that a terminal disclaimer and fee are due here.)

Petitioners' attentions always are directed to the guidance in the Commentary at MPEP §711.03(c)(II).

BACKGROUND

The record reflects as follows:

Petitioner failed to reply timely and properly to the 2 November, 2006, Notice to File Corrected Application Papers, with reply due absent extension of time on or before 2 January, 2007.

The application went abandoned after midnight 2 January, 2007.

The Office mailed the Notice of Abandonment on 6 July, 2007.

On 30 March, 2009, Petitioner (*pro se*) filed a petition (with fee) pursuant to 37 C.F.R. §1.137(a), averring unavoidable delay, with a reply in the form of corrected application papers. Further, Petitioner argued that:

- Petitioner's delay was unavoidable because he received neither the 2 November, 2006 Notice to File Corrected Application Papers nor the 6 July, 2007, Notice of Abandonment; and

- "it is not unusual for us to receive mail that belongs to other people—we consider it as a human or machine error,"[1]

Petitioner submitted the statement of practitioner George L. Boller (Reg. No. 26,258) and it was not clear as to the element(s) of the statement(s) for which the signature was supplied—as one registered to practice before the Office, Mr. Boller was aware that unsigned papers are not acceptable. (*See*: 37 C.F.R. §1.4) The petitions were dismissed on 26 May, 2009, for failure to satisfy the requirements pursuant to the regulations at 37 C.F.R. §1.818, and 37 C.F.R. §1.137(a). (*See*: MPEP §711.03(c).)

On 23 June, 2009, Petitioner filed, *inter alia*, a petition (with fee) pursuant to 37 C.F.R. §1.137(b), with a reply in the form of substitute specification (and statement as to no new matter contained therein) and made the statement of unintentional delay.

The record (including the petitions filed on 30 March, 2009, and 23 June, 2009) does not necessitate a finding that the delay between midnight 2 January, 2007(date of abandonment), and 23 June, 2009 (date of filing of grantable petition), was not unintentional.

Rather, the Patent and Trademark Office is relying in this matter on the duty of candor and good faith of Petitioner Yousef Daneshvar and (former) Counsel George Boller (Reg. No. 26,258) when accepting Petitioner's representation that the delay in filing the response was unintentional.[2]

Again, Petitioners' attentions always are directed to the guidance in the Commentary at MPEP §711.03(c)(II).

The availability of applications and application papers online to applicants/practitioners who diligently associate their Customer Number with the respective application(s) now provides an applicant/practitioner on-demand information as to events/transactions in an application.

---

[1] While the Office did not doubt the veracity of Petitioner, the requirements of the Rules of Practice apply to all who practice before the Office—whether registered practitioner or *pro se* applicant. If Petitioner has experienced a history of erroneous delivery and/or non-delivery of mail, the statutory (and therefore non-waivable) requirement for Petitioner to be timely in response to Office actions may compel Petitioner to consider other alternatives for receipt of mail.

[2] See Changes to Patent Practice and Procedure, 62 Fed. Reg. at 53160 and 53178, 1203 Off. Gaz. Pat. Office at 88 and 103 (responses to comments 64 and 109)(applicant obligated under 37 C.F.R. §10.18 to inquire into the underlying facts and circumstances when providing the statement required by 37 C.F.R. §1.137(b) to the Patent and Trademark Office).

Out of an abundance of caution, Petitioners always are reminded that those registered to practice and all others who make representations before the Office **must** inquire into the underlying facts of representations made to the Office and support averments with the appropriate documentation–since all owe to the Office the continuing duty to disclose.[3]

STATUTES, REGULATIONS AND ANALYSIS

Congress has authorized the Commissioner to "revive an application if the delay is shown to the satisfaction of the Commissioner to have been "unavoidable." 35 U.S.C. §133 (1994).[4]
The regulations at 37 C.F.R. §1.137(a) and (b) set forth the requirements for a Petitioner to revive a previously unavoidably or unintentionally, respectively, abandoned application under this congressional grant of authority.

Unintentional delays are those that do not satisfy the very strict statutory and regulatory requirements of unavoidable delay, and also, by definition, are not intentional.[5]))

As to Allegations of Unintentional Delay

The requirements of a grantable petition pursuant to 37 C.F.R. §1.137(b) are the petition and fee therefor, a reply, a proper statement of unintentional delay under the regulation, and, where applicable, a terminal disclaimer and fee.

It appears that the requirements under 37 C.F.R. §1.137(b) have been satisfied.

CONCLUSION

Accordingly, the petition under 37 C.F.R. §1.137(b) is **granted**.

---

[3] See supplement of 17 June, 1999. The Patent and Trademark Office is relying on petitioner's duty of candor and good faith and accepting a statement made by Petitioner. See Changes to Patent Practice and Procedure, 62 Fed. Reg. at 53160 and 53178, 1203 Off. Gaz. Pat. Office at 88 and 103 (responses to comments 64 and 109)(applicant obligated under 37 C.F.R. §10.18 to inquire into the underlying facts and circumstances when providing statements to the Patent and Trademark Office).

[4] 35 U.S.C. §133 provides:

35 U.S.C. §133 Time for prosecuting application.
Upon failure of the applicant to prosecute the application within six months after any action therein, of which notice has been given or mailed to the applicant, or within such shorter time, not less than thirty days, as fixed by the Commissioner in such action, the application shall be regarded as abandoned by the parties thereto, unless it be shown to the satisfaction of the Commissioner that such delay was unavoidable.

[5] Therefore, by example, an unintentional delay in the reply might occur if the reply and transmittal form are to be prepared for shipment by the US Postal Service, but other pressing matters distract one's attention and the mail is not timely deposited for shipment.

The instant application is released to the Office of Patent Application Processing (OPAP) for further processing in due course.

Petitioner may find it beneficial to view Private PAIR within a fortnight of the instant decision to ensure that the revival has been acknowledged by the OPAP in response to this decision. It is noted that all inquiries with regard to that change in status need be directed to the OPAP where that change of status must be effected—that does not occur in the Office of Petitions.

Telephone inquiries regarding this decision may be directed to the undersigned at (571) 272-3214—it is noted, however, that all practice before the Office is in writing (see: 37 C.F.R. §1.2[6]) and the proper authority for action on any matter in this regard are the statutes (35 U.S.C.), regulations (37 C.F.R.) and the commentary on policy (MPEP). Therefore, no telephone discussion may be controlling or considered authority for Petitioner's action(s).

/John J. Gillon, Jr./
John J. Gillon, Jr.
Senior Attorney
Office of Petitions

---

[6] The regulations at 37 C.F.R. §1.2 provide:
§1.2 Business to be transacted in writing.
All business with the Patent and Trademark Office should be transacted in writing. The personal attendance of applicants or their attorneys or agents at the Patent and Trademark Office is unnecessary. The action of the Patent and Trademark Office will be based exclusively on the written record in the Office. No attention will be paid to any alleged oral promise, stipulation, or understanding in relation to which there is disagreement or doubt.

UNITED STATES PATENT AND TRADEMARK OFFICE

UNDER SECRETARY OF COMMERCE FOR INTELLECTUAL PROPERTY AND
DIRECTOR OF THE UNITED STATES PATENT AND TRADEMARK OFFICE
WASHINGTON, DC 20231
www.uspto.gov

JUL 2 3 2007

In re Application of
George Gruner
Serial Number: 11/581,074
Filed: October 16, 2006
For: MULTILAYERED DEVICE HAVING NANOSTRUCTURED NETWORKS

DECISION ON PETITION UNDER M.P.E.P. 708.02(IV)

This is in response to the petition filed July 5, 2007, requesting that the above-identified application be granted Special Status under Section 708.02 (IV) of the MPEP and 37 CFR 1.102(c)

The petition has been considered and found to comply with the requirements set forth under the above-noted section. Accordingly, the petition is granted.

The petition is GRANTED.

William Krynski, Quality Assurance Specialist
Technology Center 1700
Chemical and Materials Engineering

UNITED STATES PATENT AND TRADEMARK OFFICE

Commissioner for Patents
United States Patent and Trademark Office
P.O. Box 1450
Alexandria, VA 22313-1450
www.uspto.gov

TOWNSEND AND TOWNSEND
AND CREW, LLP
TWO EMBARCADERO CENTER
EIGHTH FLOOR
SAN FRANCISCO CA 94111-3834

MAILED
JUL 14 2010
OFFICE OF PETITIONS

In re Application of Miller, et al. Application No. 11/581,095 Filed: 16 October, 2006 Attorney Docket No.: 019959-006211US	: : : : :	DECISION ON PETITION

This is a decision on the petition under 37 C.F.R. §1.78(a)(3), filed 16 November, 2009, to accept an unintentionally delayed claim under 35 U.S.C. §120 for the benefit of priority to a prior-filed application.

The petition is **DISMISSED**.

A petition for acceptance of a claim for late priority under 37 C.F.R. §1.78(a)(3) is only applicable to those applications filed on or after November 29, 2000. Further, the petition is appropriate only after the expiration of the period specified in 37 C.F.R. §1.78(a)(2)(ii) and 1.78(a)(5)(ii). In addition, the petition under 37 C.F.R. §1.78(a)(3) and §1.78(a)(6) must be accompanied by:

(1) the reference required by 35 U.S.C. §120 and 37 C.F.R.§1.78(a)(2)(i) of the prior-filed application, unless previously submitted;
(2) the surcharge set forth in 37 C.F.R. §1.17(t); and
(3) a statement that the entire delay between the date the claim was due under 37 C.F.R. §1.78(a)(2)(ii) and the date the claim was filed was unintentional. The Director may require additional information where there is a question whether the delay was unintentional.

The petition fails to comply with item (1) above.

It appears that Petitioner has failed to file an amendment to provide the reference required.

Application No. 11/581,095

The amendment as drafted (incorporated into a petition) is unacceptable and, therefore, is not considered a proper reference under 37 C.F.R. §1.78(a)(3).

Accordingly, the petition under 37 CFR 1.78(a)(3) is **dismissed**.

This matter is being referred to Technology Center AU 2467 for further processing in due course.

Any inquiries concerning this decision may be directed to John Gillon at (571) 272-3214. All other inquiries concerning either the examination procedures or status of the application should be directed to the Technology Center.

Chris Bottorff
Supervisory Petitions Examiner
Office of Petitions

UNITED STATES PATENT AND TRADEMARK OFFICE

Commissioner for Patents
United States Patent and Trademark Office
P.O. Box 1450
Alexandria, VA 22313-1450
www.uspto.gov

GENENCOR INTERNATIONAL, INC.
925 PAGE MILL ROAD
PALO ALTO, CA 94304-1013

COPY MAILED
JUN 17 2008

In re Application of Shaw et al. :
Application No. 11/581,102 : Decision on Petition
Filing Date: October 12, 2006 :
Attorney Docket No. GC889-2 :

This is a decision on the petition filed June 10, 2008, under 37 CFR 1.182, which is being treated as a petition under 37 CFR 1.10 to accord the application a filing date of October 12, 2006. This is also a decision on the petition filed June 10, 2008, requesting expedited consideration of the petition requesting a filing date of October 12, 2006.

The petition under 37 CFR 1.10 is **granted**.

The petition under 37 CFR 1.182 for expedited consideration of the petition requesting a filing date of October 12, 2006, is **granted**.

Upon receipt of the application papers, the Office accorded the application a filing date of October 13, 2006.

Petitioner asserts the "date-in" on the "Express Mail" mailing label indicates the application was mailed by Express Mail on October 12, 2006. Petitioner asserts the date-stamp on the label also indicates the application was mailed October 12, 2006.

The handwritten date-in on the Express Mail label filed by petitioner, as scanned into Office records, is illegible. Therefore, petitioner has not shown the filing date granted by the Office is different than the date-in on the label. However, the date-stamp on the label is clearly legible. The date-stamp indicates the application was mailed October 12, 2006. The date-stamp is sufficient to prove the application was mailed October 12, 2006.

Petitioner has satisfied the requirements of 37 CFR 1.10 and the application will be accorded a filing date of October 12, 2006.

Petitioner submitted $400 for the petition under 37 CFR 1.10. However, a fee is not necessary for petitions under 37 CFR 1.10. Therefore, the $400 has been credited back to petitioner's deposit account.

The Office of Patent Application Processing will be informed of the instant decision and will,

(1) Accord the application a filing date of October 12, 2006, and

(2) Consider the request for corrected filing receipt filed June 9, 2008.

Telephone inquiries regarding this communication should be directed to Petitions Attorney Steven Brantley at (571) 272-3203.

Charles Steven Brantley
Senior Petitions Attorney
Office of Petitions

UNITED STATES PATENT AND TRADEMARK OFFICE

Commissioner for Patents
United States Patent and Trademark Office
P.O. Box 1450
Alexandria, VA 22313-1450
www.uspto.gov

LEYDIG VOIT & MAYER, LTD
TWO PRUDENTIAL PLAZA, SUITE 4900
180 NORTH STETSON AVENUE
CHICAGO, IL 60601-6731

COPY MAILED

SEP 14 2007

OFFICE OF PETITIONS

In re Application of	:	
PELUSO, Francesco	:	
Application No. 11/581,119	:	DECISION ON PETITION
Filed: October 13, 2006	:	TO WITHDRAW
Attorney Docket No. **254840**	:	FROM RECORD

This is a decision on the Request to Withdraw as attorney or agent of record under 37 C.F.R. § 1.36(b), filed August 01, 2007.

The request is **APPROVED**.

A grantable request to withdraw as attorney/agent of record must be signed by every attorney/agent seeking to withdraw or contain a clear indication that one attorney is signing on behalf of another/others. A request to withdraw will not be approved unless at least 30 (thirty) days would remain between the date of approval and the later of the expiration date of a time to file a response or the expiration date of the maximum time period which can be extended under 37 C.F.R. § 1.136(a).

The request was signed by Steven H. Sklar on behalf of all attorneys of record who are associated with customer No. 23460. All attorneys/agents associated have been withdrawn. Applicant is reminded that there is no attorney of record at this time.

All future correspondence will be directed to the first named inventor Francesco Peluso at the address indicated below.

There are no outstanding office actions at this time.

Telephone inquiries concerning this decision should be directed to Michelle R. Eason at 571-272-4231.

T. Williams

Terri Williams
Petitions Examiner
Office of Petitions

cc: **FRANCESCO PELUSO**
VIA CASE ROSSE, 21
SALERNO, ITALY 84131

UNITED STATES PATENT AND TRADEMARK OFFICE

UNITED STATES DEPARTMENT OF COMMERCE
United States Patent and Trademark Office
Address: COMMISSIONER FOR PATENTS
P.O. Box 1450
Alexandria, Virginia 22313-1450
www.uspto.gov

APPLICATION NUMBER	FILING OR 371 (c) DATE	FIRST NAMED APPLICANT	ATTY. DOCKET NO./TITLE
11/581,119	10/13/2006	Francesco Peluso	254840

CONFIRMATION NO. 7037

OC000000025756030

23460
LEYDIG VOIT & MAYER, LTD
TWO PRUDENTIAL PLAZA, SUITE 4900
180 NORTH STETSON AVENUE
CHICAGO, IL 60601-6731

Date Mailed: 09/11/2007

NOTICE REGARDING CHANGE OF POWER OF ATTORNEY

This is in response to the Power of Attorney filed 08/01/2007.

- The withdrawal as attorney in this application has been accepted. Future correspondence will be mailed to the new address of record. 37 CFR 1.33.

Michelle R. Eden

Office of Initial Patent Examination (571) 272-4000, or 1-800-PTO-9199
FORMER ATTORNEY/AGENT COPY

UNITED STATES PATENT AND TRADEMARK OFFICE

Commissioner for Patents
United States Patent and Trademark Office
P.O. Box 1450
Alexandria, VA 22313-1450
www.uspto.gov

JAMES RUSSELL CLAYBROOK
P. O. BOX 843
NEW HAMPTON, NY 10958

COPY MAILED

NOV 1 8 2008

OFFICE OF PETITIONS

In re Application of	:	
Noel P. Horkan	:	
Application No. 11/581,135	:	DECISION ON PETITION
Filed: October 14, 2006	:	
Attorney Docket No. HOR 103	:	

This is a decision on the petition under the unintentional provisions of 37 CFR 1.137(b), filed October 8, 2008, to revive the above-identified application.

The petition is **GRANTED**.

The application became abandoned for failure to reply in a timely manner to the non-final Office action mailed, November 14, 2007, which set a shortened statutory period for reply of three (3) months. No extensions of time under the provisions of 37 CFR 1.136(a) were obtained. Accordingly, the application became abandoned on February 15, 2008.

The petition satisfies the requirements of 37 CFR 1.137(b) in that petitioner has supplied (1) the reply in the form of a amendment, (2) the petition fee of $810, and (3) a proper statement of unintentional delay.

There is no indication that the person signing the petition was ever given a power of attorney to prosecute the application. If the person signing the petition desires to be acknowledged as the attorney or record in this application, the appropriate power of attorney document must be submitted.

Telephone inquiries concerning this decision should be directed to JoAnne Burke at (571) 272-4584.

This application is being referred to Technology Center AU 3711 for appropriate action by the Examiner in the normal course of business on the reply received.

Ramesh Krishnamurthy
Petitions Examiner
Office of Petitions

OIPE IAP63
OCT 08 2008
PATENT & TRADEMARK OFFICE

The DAC

PTO/SB/64 (09-08)
Approved for use through 10/31/2008. OMB 0651-0031
U.S. Patent and Trademark Office; U.S. DEPARTMENT OF COMMERCE
Under the Paperwork Reduction Act of 1995, no persons are required to respond to a collection of information unless it displays a valid OMB control number.

PETITION FOR REVIVAL OF AN APPLICATION FOR PATENT ABANDONED UNINTENTIONALLY UNDER 37 CFR 1.137(b)

Docket Number (Optional)

First named inventor: Noel P. Horton

Application No.: 11/581,135 Art Unit: 3711

Filed: 10/14/2006 Examiner: Mitra Aryanpour

Title: Football Center Training Aid

Attention: Office of Petitions
Mail Stop Petition
Commissioner for Patents
P.O. Box 1450
Alexandria, VA 22313-1450
FAX (571) 273-8300

NOTE: If information or assistance is needed in completing this form, please contact Petitions Information at (571) 272-3282.

The above-identified application became abandoned for failure to file a timely and proper reply to a notice or action by the United States Patent and Trademark Office. The date of abandonment is the day after the expiration date of the period set for reply in the office notice or action plus an extensions of time actually obtained.

APPLICANT HEREBY PETITIONS FOR REVIVAL OF THIS APPLICATION

NOTE: A grantable petition requires the following items:
(1) Petition fee;
(2) Reply and/or issue fee;
(3) Terminal disclaimer with disclaimer fee - required for all utility and plant applications filed before June 8, 1995; and for all design applications; and
(4) Statement that the entire delay was unintentional.

1. Petition fee

[X] Small entity-fee $ 810.00 (37 CFR 1.17(m)). Applicant claims small entity status. See 37 CFR 1.27.

[ ] Other than small entity – fee $ _____ (37 CFR 1.17(m))

2. Reply and/or fee

A. The reply and/or fee to the above-noted Office action in the form of Reply to Office Action (identify type of reply):

[ ] has been filed previously on _____.
[X] is enclosed herewith.

B. The issue fee and publication fee (if applicable) of $ _____
[ ] has been paid previously on _____.
[ ] is enclosed herewith.

10/08/2008 EFLORES 00000003 11581135
01 FC:2453 810.00 OP

This collection of information is required by 37 CFR 1.137(b). The information is required to obtain or retain a benefit by the public which is to file (and by the USPTO to process) an application. Confidentiality is governed by 35 U.S.C. 122 and 37 CFR 1.11 and 1.14. This collection is estimated to take 1.0 hour to complete, including gathering, preparing, and submitting the completed application form to the USPTO. Time will vary depending upon the individual case. Any comments on the amount of time you require to complete this form and/or suggestions for reducing this burden, should be sent to the Chief Information Officer, U.S. Patent and Trademark Office, U.S. Department of Commerce, P.O. Box 1450, Alexandria, VA 22313-1450. DO NOT SEND FEES OR COMPLETED FORMS TO THIS ADDRESS. **SEND TO: Mail Stop Petition, Commissioner for Patents, P.O. Box 1450, Alexandria, VA 22313-1450.**

If you need assistance in completing the form, call 1-800-PTO-9199 and select option 2.

Under the Paperwork Reduction Act of 1995, no persons are required to respond to a collection of information unless it displays a valid OMB control number.

3. Terminal disclaimer with disclaimer fee

☐ Since this utility/plant application was filed on or after June 8, 1995, no terminal disclaimer is required.

☐ A terminal disclaimer (and disclaimer fee (37 CFR 1.20(d)) of $ _____ for a small entity or $ _____ for other than a small entity) disclaiming the required period of time is enclosed herewith (see PTO/SB/63).

4. STATEMENT: The entire delay in filing the required reply from the due date for the required reply until the filing of a grantable petition under 37 CFR 1.137(b) was unintentional. [NOTE: The United States Patent and Trademark Office may require additional information if there is a question as to whether either the abandonment or the delay in filing a petition under 37 CFR 1.137(b) was unintentional (MPEP 711.03(c), subsections (III)(C) and (D)).]

WARNING:

Petitioner/applicant is cautioned to avoid submitting personal information in documents filed in a patent application that may contribute to identity theft. Personal information such as social security numbers, bank account numbers, or credit card numbers (other than a check or credit card authorization form PTO-2038 submitted for payment purposes) is never required by the USPTO to support a petition or an application. If this type of personal information is included in documents submitted to the USPTO, petitioners/applicants should consider redacting such personal information from the documents before submitting them to the USPTO. Petitioner/applicant is advised that the record of a patent application is available to the public after publication of the application (unless a non-publication request in compliance with 37 CFR 1.213(a) is made in the application) or issuance of a patent. Furthermore, the record from an abandoned application may also be available to the public if the application is referenced in a published application or an issued patent (see 37 CFR 1.14). Checks and credit card authorization forms PTO-2038 submitted for payment purposes are not retained in the application file and therefore are not publicly available.

James Russell Claybrook — Signature
Oct. 5, 2008 — Date
James Russell Claybrook — Typed or printed name
46628 — Registration Number, if applicable
PO Box 843 — Address
845-551-9266 — Telephone Number
New Hampton, NY 10958 — Address

Enclosures:
- ☒ Fee Payment
- ☒ Reply
- ☐ Terminal Disclaimer Form
- ☒ Additional sheets containing statements establishing unintentional delay
- ☐ Other: _____

CERTIFICATE OF MAILING OR TRANSMISSION [37 CFR 1.8(a)]

I hereby certify that this correspondence is being:

☒ Deposited with the United States Postal Service on the date shown below with sufficient postage as first class mail in an envelope addressed to: Mail Stop Petition, Commissioner for Patents, P. O. Box 1450, Alexandria, VA 22313-1450.

☐ Transmitted by facsimile on the date shown below to the United States Patent and Trademark Office at (571) 273-8300.

Oct. 5, 2008 — Date
James Russell Claybrook — Signature
James Russell Claybrook — Typed or printed name of person signing certificate

OIPE IAP63
OCT 0 8 2008
PATENT & TRADEMARK OFFICE

J. Russell Claybrook
P. O. Box 843
New Hampton, New York 10958
October 5, 2008

(845) 551-9266
JClaybrook@hvc.rr.com

Commissioner for Patents
P. O. Box 1450
Alexandria, VA 22313-1450

Re: Petition Re U. S. Application 11.581,135

Dear Commissioner:

The entire delay in filing the required reply from the due date for the required reply until the filing of a grantable petition under 37 CFR 1.137(b) was unintentional.

Sincerely,

James Russell Claybrook

James Russell Claybrook, Ph.D.
Registered Patent Agent
Registration No. 46628

Enclosures

UNITED STATES PATENT AND TRADEMARK OFFICE

Commissioner for Patents
United States Patent and Trademark Office
P.O. Box 1450
Alexandria, VA 22313-1450
www.uspto.gov

MAILED

MAY 25 2010

OFFICE OF PETITIONS

YAHOO C/O MOFO PALO ALTO
755 PAGE MILL ROAD
PALO ALTO, CA 94304

In re Application of	:	
Thomas Wailes, et al.	:	
Application No. 11/581,145	:	DECISION ON PETITION
Filed: October 13, 2006	:	TO WITHDRAW
Attorney Docket No. 324212011100	:	FROM RECORD
	:	

This is a decision on the Request to Withdraw as attorney or agent of record under 37 C.F.R. § 1.36(b), filed March 23, 2010.

The request is **DISMISSED** as moot.

A review of the file record indicates that the power of attorney to Yahoo C/O MOFO Palo Alto has been revoked by the assignee of the patent application on April 16, 2010. Accordingly, the request to withdraw under 37 C.F.R. § 1.36(b) is moot.

All future communications from the Office will continue to be directed to the below-listed address until otherwise notified by applicant.

Telephone inquires concerning this decision should be directed to undersigned at 571-272-1642. All other inquiries concerning the examination or status of this application should be directed to the Technology Center.

/AMW/
April M. Wise
Petitions Examiner
Office of Petitions

cc: YAHOO! INC
701 FIRST AVENUE
SUNNYVALE, CA 94089

UNITED STATES PATENT AND TRADEMARK OFFICE

UNITED STATES DEPARTMENT OF COMMERCE
United States Patent and Trademark Office
Address: COMMISSIONER FOR PATENTS
P.O. Box 1450
Alexandria, Virginia 22313-1450
www.uspto.gov

APPLICATION NO.	FILING DATE	FIRST NAMED INVENTOR	ATTORNEY DOCKET NO.	CONFIRMATION NO.
11/581,158	10/12/2006	Kyong-Tae Park	ABS-3020 US	7741

7590 04/10/2009

Haynes and Boone, LLP
IP Section
2323 Victory Avenue
SUITE 700
Dallas, TX 75219

EXAMINER
SHALWALA, BIPIN H

ART UNIT	PAPER NUMBER
2629	

MAIL DATE	DELIVERY MODE
04/10/2009	PAPER

DECISION GRANTING PETITION UNDER 37 CFR 1.138(d)

The declaration of express abandonment is recognized

This is in response to the petition under 37 CFR 1.138(d), requesting for a refund of any previously paid search fee and excess claims fee in the above-identified application.

The petition is granted.

The express abandonment is recognized. Any previously paid search fee and excess claims fee are hereby refunded.

Telephone inquiries should be directed to the Office of Data Management at (571) 272-4200.

Nioni Farmer

Patent Publication Branch
Office of Data Management

Adjustment date: 04/10/2009 NFARMER
10/18/2006 YPOLITE1 00000032 502257 11581158
02 FC:1111 500.00 CR

FORM PET651G (Rev. 08/07)

UNITED STATES PATENT AND TRADEMARK OFFICE

Commissioner for Patents
United States Patent and Trademark Office
P.O. Box 1450
Alexandria, VA 22313-1450
www.uspto.gov

RUTAN & TUCKER, LLP.
611 ANTON BLVD
SUITE 1400
COSTA MESA CA 92626

COPY MAILED

OCT 27 2008

OFFICE OF PETITIONS

In re Application of	:	
THRUSH, Bruce A. et al.	:	
Application No. 11/581,204	:	DECISION ON PETITION
Filed: October 13, 2006	:	TO WITHDRAW
Attorney Docket No. **101342.0011US1**	:	FROM RECORD
	:	

This is a decision on the Request to Withdraw as attorney or agent of record under 37 C.F.R. § 1.36(b), filed October 03, 2008.

The request is **APPROVED**.

A grantable request to withdraw as attorney/agent of record must be signed by every attorney/agent seeking to withdraw or contain a clear indication that one attorney is signing on behalf of another/others. The Office requires the practitioner(s) requesting withdrawal to certify that he, she, or they have: (1) given reasonable notice to the client, prior to the expiration of the response period, that the practitioner(s) intends to withdraw from employment; (2) delivered to the client or a duly authorized representative of the client all papers and property (including funds) to which the client is entitled; and (3) notified the client of any responses that may be due and the time frame within which the client must respond, pursuant 37 CFR 10.40(c).

The request was signed by Todd Wight on behalf of all attorneys of record who are associated with customer No. 34284. All attorneys/agents associated with the Customer Number 34284 have been withdrawn. Applicant is reminded that there is no attorney of record at this time.

The request to change the correspondence address of record is not acceptable as the requested correspondence address is not that of: (1) the first named signing inventor; or (2) an intervening assignee of the entire interest under 37 C.F.R 3.71. All future communications from the Office will be directed to the first named signing inventor at the first copied address below until otherwise properly notified by the applicant.

Telephone inquiries concerning this decision should be directed to Tredelle Jackson at 571-272-2783.

Tredelle D. Jackson
Paralegal Specialist
Office of Petitions

cc: **BRUCE A. THRUSH**
39 OAKCLIFF DRIVE
LAGUNA NIGUEL CA 92677

cc: **ROBERT FISH**
FISH & ASSOCIATES, PC
2603 MAIN STREET
SUITE 1050
IRVINE CA 92614

UNITED STATES PATENT AND TRADEMARK OFFICE

UNITED STATES DEPARTMENT OF COMMERCE
United States Patent and Trademark Office
Address: COMMISSIONER FOR PATENTS
P.O. Box 1450
Alexandria, Virginia 22313-1450
www.uspto.gov

GRAYBEAL JACKSON LLP
400 - 108TH AVENUE NE
SUITE 700
BELLEVUE, WA 98004

Mail Date: 04/21/2010

Applicant	: Federico Ziglioli	: DECISION ON REQUEST FOR
Patent Number	: 7616451	: RECALCULATION of PATENT
Issue Date	: 11/10/2009	: TERM ADJUSTMENT IN VIEW
Appliction No	: 11/581,216	: OF WYETH AND NOTICE OF INTENT TO
Filed	: 10/13/2006	: ISSUE CERTIFICATE OF CORRECTION
		:

The Request for Recalculation is **GRANTED** to the extent indicated.

The patent term adjustment has been determined to be **527** days. The USPTO will *sua sponte* issue a certificate of correction reflecting the amount of PTA days determined by the recalculation.

Prior to the issuance of the certificate of correction, the USPTO will afford patentee an opportunity to be heard and request reconsideration. Accordingly, patentee has **one month or thirty (30) days**, whichever is longer, to file a request for reconsideration of this patent term adjustment calculation. See 35 U.S.C. 154(b)(3)(B)(ii) and 37 CFR 1.322(a)(4). No extensions of time will be granted under 37 CFR 1.136.

Patentee should use document code PET.OP if electronically filing a request for reconsideration of this patent term adjustment calculation. The patentee must also include the information required by 37 CFR 1.705(b)(2) and the fee required by 37 CFR 1.18(e). If patentee does not file a timely request for reconsideration of this patent term adjustment calculation including the information required by 37 CFR 1.705(b)(2) and the fee required by 37 CFR 1.18(e), the USPTO will issue a certificate of correction reflecting the PTA determination noted above.

Patentee should be aware that in order to preserve the right to review in the United States District Court for the District of Columbia of the USPTO patent term adjustment determination, patentee must ensure that he or she also take the steps required under 35 U.S.C. 154(b)(4)(A) in a timely manner. Nothing in the request for recalculation should be construed as providing an alternative time frame for commencing a civil action under 35 U.S.C. 154(b)(4)(A).

Any questions concerning this decision should be directed to the Office of Patent Legal Administration at 571-272-7702.

UNITED STATES PATENT AND TRADEMARK OFFICE

UNITED STATES DEPARTMENT OF COMMERCE
United States Patent and Trademark Office
Address: COMMISSIONER FOR PATENTS
P.O. Box 1450
Alexandria, Virginia 22313-1450
www.uspto.gov

GRAYBEAL JACKSON LLP
400 - 108TH AVENUE NE
SUITE 700
BELLEVUE, WA 98004

Mail Date: 05/18/2010

Applicant : Federico Ziglioli
Patent Number : 7616451
Issue Date : 11/10/2009
Application No : 11/581,216
Filed : 10/13/2006

: NOTICE CONCERNING IMPROPER
: CALCULATION OF PATENT TERM
: ADJUSTMENT BASED UPON USPTO
: IMPROPERLY MEASURING REDUCTION
: PERIOD UNDER 37 CFR 1.704(c)(10).

The United States Patent and Trademark Office (USPTO) discovered that in processing the recent recalculation decisions mailed in response to patentee's filed Request for Recalculation of Patent Term Adjustment in view of Wyeth, the USPTO improperly measured the reduction period for reductions under 37 CFR 1.704(c)(10). Pursuant to 37 CFR 1.704(c)(10), patentee's reduction begins on the date of filing the amendment under 37 CFR 1.312 ("1.312 amendment") or other related paper and ends on the date that the Office mails a response to the filing of the 1.312 amendment or other paper. It has been discovered that during the recalculation, the calculation failed to the limit the reduction to the mail date of the response to the 1.312 amendment or other paper. Accordingly, patentee's reductions were greater than warranted.

This notice **VACATES** the previous GRANTED request for recalculation and provides patentee with a revised GRANTED recalculation.

The patent term adjustment has been determined to be **561** days. The USPTO will *sua sponte* issue a certificate of correction reflecting the amount of patent term adjustment (PTA) days determined by the recalculation.

Prior to the issuance of the certificate of correction, the USPTO will afford patentee an opportunity to be heard and request reconsideration. Accordingly, patentee has **one month or thirty (30) days** from the mail date of this notice, whichever is longer, to file a request for reconsideration of this PTA calculation. See 35 U.S.C. § 154(b)(3)(B)(ii) and 37 CFR 1.322(a)(4).

Patentee should use document code PET.OP if electronically filing a request for reconsideration of this PTA calculation. The patentee must also include the information required by 37 CFR 1.705(b)(2), and the fee required by 37 CFR 1.18(e). If patentee does not file a timely request for reconsideration of this PTA calculation, including the information required by 37 CFR 1.705(b)(2) and the fee required by 37 CFR 1.18(e), the USPTO will issue a certificate of correction reflecting the PTA determination noted above.

Patentee should be aware that in order to preserve the right of review of the USPTO's PTA determination in the United States District Court for the District of Columbia, patentee must ensure that the steps required under 35 U.S.C. § 154 (b)(4) are taken in a timely manner. Nothing in the request for recalculation should be construed as providing an alternative time frame for commencing a civil action under 35 U.S.C. § 154(b)(4).

UNITED STATES PATENT AND TRADEMARK OFFICE

Commissioner for Patents
United States Patent and Trademark Office
P.O. Box 1450
Alexandria, VA 22313-1450
www.uspto.gov

WILLIAM M. SELENKE
5 DRUMMOND STREET
CINCINNATI, OH 45218

COPY MAILED

JAN 3 1 2007

OFFICE OF PETITIONS

In re Application of	:	
SELENKE, Albert A.	:	
Application No. 11/581,237	:	DECISION ON PETITION
Filed: October 16, 2006	:	TO MAKE SPECIAL UNDER
Attorney Docket No.	:	37 CFR 1.102(c)(1)
	:	

This is a decision on the petition under 37 CFR 1.102(c)(1), filed December 18, 2006, to make the above-identified application special based on applicant's age as set forth in M.P.E.P. § 708.02, Section IV.

The petition is **GRANTED**.

A grantable petition to make an application special under 37 CFR 1.102(c)(1) and MPEP § 708.02, Section IV: Applicant's Age, must be accompanied by evidence showing that at least one of the applicants is 65 years of age, or more, such as a birth certificate or a statement by applicant. No fee is required.

The instant petition includes the birth certificates and driver's licenses of inventors Albert A. Selenke and William M. Selenke, attesting to their age. Accordingly, the above-identified application has been accorded "special" status.

Telephone inquiries concerning this decision should be directed to the undersigned at 571-272-7253.

All other inquiries concerning either the examination or status of the application should be directed to the Technology Center.

The application is being forwarded to the Technology Center Art Unit 3652 for action on the merits commensurate with this decision.

Monica A. Graves
Petitions Examiner
Office of Petitions

UNITED STATES PATENT AND TRADEMARK OFFICE

Commissioner for Patents
United States Patent and Trademark Office
P.O. Box 1450
Alexandria, VA 22313-1450
www.uspto.gov

RUSSO & DUCKWORTH, LLP
9090 IRVINE CENTER DRIVE
SECOND FLOOR
IRVINE CA 92618

COPY MAILED

SEP 21 2009

OFFICE OF PETITIONS

In re Application of	:	DECISION
Green	:	
Application No. 11/581,242	:	
Filed: 16 October, 2005	:	
Attorney Docket No. 832-P-5-USA	:	

This is a decision on the petition filed on 15 June, 2009, for revival of an application abandoned due to unintentional delay under 37 C.F.R. §1.137(b).

The petition under 37 C.F.R. §1.137(b) is **GRANTED**.

As to the Allegations
of Unintentional Delay

The requirements of a grantable petition pursuant to 37 C.F.R. §1.137(b) are the petition and fee therefor, a reply, a proper statement of unintentional delay under the regulation, and, where applicable, a terminal disclaimer and fee. (However, it does not appear that a terminal disclaimer and fee are due here.)

Petitioners' attentions always are directed to the guidance in the Commentary at MPEP §711.03(c)(II).

BACKGROUND

The record reflects as follows:

Petitioner failed to reply timely and properly to the Notice of Allowance/Allowability and Fees Due mailed on 6 February, 2009, with reply due under a non-extendable deadline on or before 6 May, 2009.

The application went abandoned by operation of law after midnight 6 May, 2009.

The Office mailed the Notice of Abandonment on 2 June, 2009.

On 15 June, 2009, Petitioner filed, *inter alia*, a petition (with fee) pursuant to 37 C.F.R. §1.137(b), with a reply in the form of fees due and made the statement of unintentional delay. (On 24 August, 2009, Petitioner appears to have remedied a previously insufficient payment.)

Again, Petitioners' attentions always are directed to the guidance in the Commentary at MPEP §711.03(c)(II).

The availability of applications and application papers online to applicants/practitioners who diligently associate their Customer Number with the respective application(s) now provides an applicant/practitioner on-demand information as to events/transactions in an application.

Out of an abundance of caution, Petitioners always are reminded that those registered to practice and all others who make representations before the Office **must** inquire into the underlying facts of representations made to the Office and support averments with the appropriate documentation–since all owe to the Office the continuing duty to disclose.[1]

STATUTES, REGULATIONS AND ANALYSIS

Congress has authorized the Commissioner to "revive an application if the delay is shown to the satisfaction of the Commissioner to have been "unavoidable." 35 U.S.C. §133 (1994).[2]
The regulations at 37 C.F.R. §1.137(a) and (b) set forth the requirements for a Petitioner to revive a previously unavoidably or unintentionally, respectively, abandoned application under this congressional grant of authority.

Unintentional delays are those that do not satisfy the very strict statutory and regulatory requirements of unavoidable delay, and also, by definition, are not intentional.[3]))

As to Allegations of Unintentional Delay

The requirements of a grantable petition pursuant to 37 C.F.R. §1.137(b) are the petition and fee therefor, a reply, a proper statement of unintentional delay under the regulation, and, where applicable, a terminal disclaimer and fee.

---

[1] See supplement of 17 June, 1999. The Patent and Trademark Office is relying on petitioner's duty of candor and good faith and accepting a statement made by Petitioner. See Changes to Patent Practice and Procedure, 62 Fed. Reg. at 53160 and 53178, 1203 Off. Gaz. Pat. Office at 88 and 103 (responses to comments 64 and 109)(applicant obligated under 37 C.F.R. §10.18 to inquire into the underlying facts and circumstances when providing statements to the Patent and Trademark Office).

[2] 35 U.S.C. §133 provides:

35 U.S.C. §133 Time for prosecuting application.
Upon failure of the applicant to prosecute the application within six months after any action therein, of which notice has been given or mailed to the applicant, or within such shorter time, not less than thirty days, as fixed by the Commissioner in such action, the application shall be regarded as abandoned by the parties thereto, unless it be shown to the satisfaction of the Commissioner that such delay was unavoidable.

[3] Therefore, by example, an unintentional delay in the reply might occur if the reply and transmittal form are to be prepared for shipment by the US Postal Service, but other pressing matters distract one's attention and the mail is not timely deposited for shipment.

It appears that the requirements under 37 C.F.R. §1.137(b) have been satisfied.

CONCLUSION

Accordingly, the petition under 37 C.F.R. §1.137(b) is **granted**.

The instant application is released to the Publications Branch to be processed into a patent in due course.

Petitioner may find it beneficial to view Private PAIR within a fortnight of the instant decision to ensure that the revival has been acknowledged by the Publications Branch in response to this decision. It is noted that all inquiries with regard to that change in status need be directed to the Publications Branch where that change of status must be effected—that does not occur in the Office of Petitions.

Telephone inquiries regarding this decision may be directed to the undersigned at (571) 272-3214—it is noted, however, that all practice before the Office is in writing (see: 37 C.F.R. §1.2[4]) and the proper authority for action on any matter in this regard are the statutes (35 U.S.C.), regulations (37 C.F.R.) and the commentary on policy (MPEP). Therefore, no telephone discussion may be controlling or considered authority for Petitioner's action(s).

/John J. Gillon, Jr./
John J. Gillon, Jr.
Senior Attorney
Office of Petitions

[4] The regulations at 37 C.F.R. §1.2 provide:
§1.2 Business to be transacted in writing.
All business with the Patent and Trademark Office should be transacted in writing. The personal attendance of applicants or their attorneys or agents at the Patent and Trademark Office is unnecessary. The action of the Patent and Trademark Office will be based exclusively on the written record in the Office. No attention will be paid to any alleged oral promise, stipulation, or understanding in relation to which there is disagreement or doubt.

UNITED STATES PATENT AND TRADEMARK OFFICE

UNITED STATES DEPARTMENT OF COMMERCE
United States Patent and Trademark Office
Address: COMMISSIONER FOR PATENTS
P.O. Box 1450
Alexandria, Virginia 22313-1450
www.uspto.gov

CANTOR COLBURN, LLP
20 Church Street
22nd Floor
Hartford, CT 06103

Mail Date: 04/20/2010

Applicant	: Sung Dug Kim	: DECISION ON REQUEST FOR
Patent Number	: 7612130	: RECALCULATION of PATENT
Issue Date	: 11/03/2009	: TERM ADJUSTMENT IN VIEW
Appliction No	: 11/581,247	: OF WYETH AND NOTICE OF INTENT TO
Filed	: 10/16/2006	: ISSUE CERTIFICATE OF CORRECTION
		:

The Request for Recalculation is **GRANTED** to the extent indicated.

The patent term adjustment has been determined to be **377** days. The USPTO will *sua sponte* issue a certificate of correction reflecting the amount of PTA days determined by the recalculation.

Prior to the issuance of the certificate of correction, the USPTO will afford patentee an opportunity to be heard and request reconsideration. Accordingly, patentee has **one month or thirty (30) days**, whichever is longer, to file a request for reconsideration of this patent term adjustment calculation. See 35 U.S.C. 154(b)(3)(B)(ii) and 37 CFR 1.322(a)(4). No extensions of time will be granted under 37 CFR 1.136.

Patentee should use document code PET.OP if electronically filing a request for reconsideration of this patent term adjustment calculation. The patentee must also include the information required by 37 CFR 1.705(b)(2) and the fee required by 37 CFR 1.18(e). If patentee does not file a timely request for reconsideration of this patent term adjustment calculation including the information required by 37 CFR 1.705(b)(2) and the fee required by 37 CFR 1.18(e), the USPTO will issue a certificate of correction reflecting the PTA determination noted above.

Patentee should be aware that in order to preserve the right to review in the United States District Court for the District of Columbia of the USPTO patent term adjustment determination, patentee must ensure that he or she also take the steps required under 35 U.S.C. 154(b)(4)(A) in a timely manner. Nothing in the request for recalculation should be construed as providing an alternative time frame for commencing a civil action under 35 U.S.C. 154(b)(4)(A).

Any questions concerning this decision should be directed to the Office of Patent Legal Administration at 571-272-7702.

UNITED STATES PATENT AND TRADEMARK OFFICE

Commissioner for Patents
United States Patent and Trademark Office
P.O. Box 1450
Alexandria, VA 22313-1450
www.uspto.gov
DIW Dec-08

LAWRENCE C. EDELMAN, ESQ
IP COUNSEL, AUTOMATIC IMPULSE MACHINE DESIGN
3 BUFFALO RUN
EAST BRUNSWICK NJ 08816

RECEIVED
JAN 05 2009
OFFICE OF PETITIONS

In re Application of :
Munroe Chirnomas :
Application Number: 11/581262 :
Filing Date: 10/10/2006 : ON PETITION
Attorney Docket Number: :
03PA11US01 :

This is a decision on the petition under 37 CFR 1.137(b)[1] filed on November 24, 2008, to revive the above-identified application.

The petition is **GRANTED**.

This application became abandoned on November 2, 2008, for failure to timely submit the issue and publication fees in response to the Notice of Allowance and Fee(s) Due mailed on August 1, 2008, which set a three (3) month statutory period for reply. Notice of Abandonment was mailed on November 24, 2008.

Receipt of the fee payment on November 24, 2008, is acknowledged.

The application is referred to the Office of Data Management for processing into a patent.

---

[1] Effective December 1, 1997, the provisions of 37 CFR 1.137(b) now provide that where the delay in reply was unintentional, a petition may be filed to revive an abandoned application or a lapsed patent pursuant to 37 CFR 1.137(b). A grantable petition filed under the provisions of 37 CFR 1.137(b) must be accompanied by:

(1) the required reply, unless previously filed. In a nonprovisional application abandoned for failure to prosecute, the required reply may be met by the filing of a continuing application. In a nonprovisional application filed on or after June 8, 1995, and abandoned for failure to prosecute, the required reply may also be met by the filing of a request for continued examination in compliance with § 1.114. In an application or patent, abandoned or lapsed for failure to pay the issue fee or any portion thereof, the required reply must be the payment of the issue fee or any outstanding balance thereof. In an application abandoned for failure to pay the publication fee, the required reply must include payment of the publication fee.

(2) the petition fee as set forth in 37 CFR 1.17(m);

(3) a statement that the entire delay in filing the required reply from the due date for the reply until the filing of a grantable petition pursuant to 37 CFR 1.137(b) was unintentional. The Director may required additional information where there is a question whether the delay was unintentional; and

(4) any terminal disclaimer (and fee as set forth in 37 CFR 1.20(d)) required pursuant to 37 CFR 1.137(c)).

Telephone inquiries concerning this matter may be directed to the undersigned at (571) 272-3231.

D Wood

Douglas I. Wood
Senior Petitions Attorney
Office of Petitions

UNITED STATES PATENT AND TRADEMARK OFFICE

UNITED STATES DEPARTMENT OF COMMERCE
United States Patent and Trademark Office
Address: COMMISSIONER FOR PATENTS
P.O. Box 1450
Alexandria, Virginia 22313-1450
www.uspto.gov

APPLICATION NO.	FILING DATE	FIRST NAMED INVENTOR	ATTORNEY DOCKET NO.	CONFIRMATION NO.
11/581,278	10/16/2006	Hyun-Chul Kim	678-2704 (P13830)	7486

7590 11/26/2008
THE FARRELL LAW FIRM, P.C.
333 EARLE OVINGTON BOULEVARD
SUITE 701
UNIONDALE, NY 11553

EXAMINER
DUBASKY, GIGI L

ART UNIT	PAPER NUMBER
2421	

MAIL DATE	DELIVERY MODE
11/26/2008	PAPER

DECISION GRANTING PETITION UNDER 37 CFR 1.138(d)

The declaration of express abandonment is recognized

This is in response to the petition under 37 CFR 1.138(d), requesting for a refund of any previously paid search fee and excess claims fee in the above-identified application.

The petition is granted.

The express abandonment is recognized. Any previously paid search fee and excess claims fee are hereby refunded.

Telephone inquiries should be directed to the Office of Data Management at (571) 272-4200.

Tom Farmer

Patent Publication Branch
Office of Data Management

Refund Ref:
11/28/2008 NFARMER 0000165299

CHECK Refund Total: $600.00

Adjustment date: 11/28/2008 NFARMER
10/18/2006 CNGUYEN2 00000042 11581278
02 FC:1111 -500.00 OP
04 FC:1202 -100.00 OP

FORM PET651G (Rev. 08/07)

UNITED STATES PATENT AND TRADEMARK OFFICE

Commissioner for Patents
United States Patent and Trademark Office
P.O. Box 1450
Alexandria, VA 22313-1450
www.uspto.gov

COPY MAILED

DEC 03 2007

OFFICE OF PETITIONS

Faegre & Benson, LLP
Patent Docketing
2200 Wells Fargo Center
90 South Seventh Street
Minneapolis, MN 55402-3901

In re Application of	:	
Alice P. Taylor et al.	:	
Application No. 11/581,287	:	DECISION ON PETITION
Filed: October 16, 2006	:	TO MAKE SPECIAL UNDER
Attorney Docket No. 341787	:	37 CFR 1.102(c)(1)
	:	

This is a decision on the petition under 37 CFR 1.102(c)(1), filed November 9, 2007, to make the above-identified application special based on applicant's age as set forth in M.P.E.P. § 708.02, Section IV.

The petition is **GRANTED**.

A grantable petition to make an application special under 37 CFR 1.102(c)(1) and MPEP § 708.02, Section IV: Applicant's Age must be accompanied by evidence showing that at least one of the applicants is 65 years of age, or more, such as a birth certificate or a statement by applicant. No fee is required

The instant petition includes an affidavit by the applicant David M. Goldenberg. Accordingly, the above-identified application has been accorded "special" status.

Telephone inquiries concerning this decision should be directed to Kimberly Inabinet at 571-272-4618.

All other inquiries concerning either the examination or status of the application should be directed to the Technology Center.

The application is being forwarded to the Technology Center Art Unit 1643 action on the merits commensurate with this decision.

Kimberly Inabinet
Petitions Examiner
Office of Petitions

UNITED STATES PATENT AND TRADEMARK OFFICE

UNITED STATES DEPARTMENT OF COMMERCE
United States Patent and Trademark Office
Address: COMMISSIONER FOR PATENTS
P.O. Box 1450
Alexandria, Virginia 22313-1450
www.uspto.gov

IMMUNOMEDICS, INC.
300 AMERICAN ROAD
MORRIS PLAINS, NJ 07950

Mail Date: 04/21/2010

Applicant	: Alice P. Taylor	: DECISION ON REQUEST FOR
Patent Number	: 7642239	: RECALCULATION of PATENT
Issue Date	: 01/05/2010	: TERM ADJUSTMENT IN VIEW
Appliction No	: 11/581,287	: OF WYETH AND NOTICE OF INTENT TO
Filed	: 10/16/2006	: ISSUE CERTIFICATE OF CORRECTION
		:

The Request for Recalculation is **GRANTED** to the extent indicated.

The patent term adjustment has been determined to be **220** days. The USPTO will *sua sponte* issue a certificate of correction reflecting the amount of PTA days determined by the recalculation.

Prior to the issuance of the certificate of correction, the USPTO will afford patentee an opportunity to be heard and request reconsideration. Accordingly, patentee has **one month or thirty (30) days**, whichever is longer, to file a request for reconsideration of this patent term adjustment calculation. See 35 U.S.C. 154(b)(3)(B)(ii) and 37 CFR 1.322(a)(4). No extensions of time will be granted under 37 CFR 1.136.

Patentee should use document code PET.OP if electronically filing a request for reconsideration of this patent term adjustment calculation. The patentee must also include the information required by 37 CFR 1.705(b)(2) and the fee required by 37 CFR 1.18(e). If patentee does not file a timely request for reconsideration of this patent term adjustment calculation including the information required by 37 CFR 1.705(b)(2) and the fee required by 37 CFR 1.18(e), the USPTO will issue a certificate of correction reflecting the PTA determination noted above.

Patentee should be aware that in order to preserve the right to review in the United States District Court for the District of Columbia of the USPTO patent term adjustment determination, patentee must ensure that he or she also take the steps required under 35 U.S.C. 154(b)(4)(A) in a timely manner. Nothing in the request for recalculation should be construed as providing an alternative time frame for commencing a civil action under 35 U.S.C. 154(b)(4)(A).

Any questions concerning this decision should be directed to the Office of Patent Legal Administration at 571-272-7702.

UNITED STATES PATENT AND TRADEMARK OFFICE

Commissioner for Patents
United States Patent and Trademark Office
P.O. Box 1450
Alexandria, VA 22313-1450
www.uspto.gov

HARNESS, DICKEY & PIERCE, P.L.C.
P.O. BOX 8910
RESTON VA 20195

COPY MAILED
FEB 18 2010

In re Application of	:	
Kyoung-Yun Baek, et al	:	
Application No. 11/581,359	:	ON PETITION
Filed: October 17, 2006	:	
Attorney Docket No. 9862-000196/US	:	
	:	

This is a decision on the petition under 37 CFR 1.313(a), filed February 17, 2010, to withdraw the above-identified application from issue.

The petition is **DISMISSED AS MOOT** since this application is now abandoned for failure to file corrected drawings on or before December 15, 2009 as required by the Notice of Allowance and Fee(s) Due/Notice of Allowability, mailed September 15, 2009.

Petitioner should note that the mere filing of a petition to withdraw from issue does not stay the period for filing the corrected drawings required by the Notice of Allowance and Fee(s) Due/Notice of Allowability. Unless an applicant receives a written communication from the Office that the application has been withdrawn from issue, the issue and publication fees must be timely submitted to avoid abandonment. *Note* MPEP § 1308(I)(A).

Petitioner requests that the present application be withdrawn from issue for consideration of an Amendment filed on February 17, 2010.

The application cannot be withdrawn from issue until the application is properly revived.

Petitioner may wish to consider filing a petition under 37 CFR 1.137 to revive this application and if withdrawal of the application is still requested, another petition to withdraw from issue, RCE and amendment may be filed along with the petition to revive.

The RCE and amendment that was filed herewith petition will not be considered.

Any inquiries regarding this decision should be directed to the undersigned at (571) 272-2991.

Terri Johnson
Petitions Examiner
Office of Petitions

UNITED STATES PATENT AND TRADEMARK OFFICE

UNITED STATES DEPARTMENT OF COMMERCE
United States Patent and Trademark Office
Address: COMMISSIONER FOR PATENTS
P.O. Box 1450
Alexandria, Virginia 22313-1450
www.uspto.gov

APPLICATION NO.	FILING DATE	FIRST NAMED INVENTOR	ATTORNEY DOCKET NO.	CONFIRMATION NO.
11/581,366	10/17/2006	Keun Soo Yim	1911.1063	7864

21171 7590 12/04/2008
STAAS & HALSEY LLP
SUITE 700
1201 NEW YORK AVENUE, N.W.
WASHINGTON, DC 20005

EXAMINER
PETRANEK, JACOB ANDREW

ART UNIT	PAPER NUMBER
2183	

MAIL DATE	DELIVERY MODE
12/04/2008	PAPER

Please find below and/or attached an Office communication concerning this application or proceeding.

The time period for reply, if any, is set in the attached communication.

UNITED STATES PATENT AND TRADEMARK OFFICE

Commissioner for Patents
United States Patent and Trademark Office
P.O. Box 1450
Alexandria, VA 22313-1450
www.uspto.gov

STAAS & HALSEY LLP
SUITE 700
1201 NEW YORK AVENUE, N.W.
WASHINGTON DC 20005

In re Application of: YIM et al.
Application No. 11/581,366
Filed: October 17, 2006
For: METHOD, MEDIUM, AND APPARATUS WITH INTERRUPT HANDLING IN A RECONFIGURABLE ARRAY

DECISION ON REQUEST TO PARTICIPATE IN PATENT PROSECUTION HIGHWAY PILOT PROGRAM AND PETITION TO MAKE SPECIAL UNDER 37 CFR 1.102(d)

This is a decision on the request to participate in the Patent Prosecution Highway (PPH) pilot program and the petition under 37 CFR 1.102(d), filed September 22, 2008 to make the above-identified application special.

The request and petition are **DISMISSED**.

A grantable request to participate in the PPH program and petition to make special require:

(1) The U.S. application must validly claim priority under 35 U.S.C. 119(a) to one or more applications filed in the KIPO;

(2) Applicant must submit a copy of the allowable/patentable claim(s) from the KIPO application(s) along with an English translation thereof and a statement that the English translation is accurate;

(3) All the claims in the U.S. application must sufficiently correspond or be amended to sufficiently correspond to the allowable/patentable claim(s) in the KIPO application(s);

(4) Examination of the U.S. application has not begun;

(5) Applicant must submit a copy of all the office actions from each of the KIPO application(s) containing the allowable/patentable claim(s) along with an English translation thereof and a statement that the English translation is accurate;

(6) Applicant must submit an IDS listing the documents cited by the KIPO examiner in the KIPO office action along with copies of documents except U.S. patents or U.S. patent application publications; and

(7) The required petition fee under 37 CFR 1.17(h).

The request to participate in the PPH pilot program and petition fail to include:

A. Item 3 above. Specifically,

1) Claims of the instant application differ in scope from the corresponding claims of the Korean allowed application, because many of the limitations listed in the instant US application differ from the corresponding limitations of the allowed Japanese claims:

For instance, Claim 14 of the instant application recites an "executing" step in the beginning of the claim, and there is no equivalent recitation in the corresponding Korean claim 14.

2) Further claim 14, and claim 15 that is dependent from claim 14 of the instant application are both mapped to the same claim 14 of the allowed Korean application. Both claims 14 and 15 differ in scope from the corresponding claim 14 of the Korean application.

3) Claims 10-13 in the instant US application have no corresponding claims cited in the claims correspondence table.

B. Item 2 and 5 above. Specifically,

Applicant has failed to submit a statement that the allowed claims translated in the English language, and reasons for refusal in the English language are a true and accurate translation of the corresponding document in the Japanese language, as required by items 2 and 5 above.

Accordingly, the Petition is **DISMISSED**.

Applicant is given a time period of ONE MONTH or THIRTY DAYS, whichever is longer, to correct the deficiencies. NO EXTENSION OF TIME UNDER 37 CFR 1.136 IS PERMITTED.

If the deficiencies are not corrected with the time period given, the application will await action in its regular turn.

Response must submitted by EFS-Web using the document description "Petition to make special under Pat Pros Hwy".

Telephone inquiries concerning this decision should be directed to Mano Padmanabhan at 571-272-4210.

All other inquiries concerning the examination or status of the application should be directed to Patent Application Information Retrieval (PAIR) system.

/Mano Padmanabhan/

Mano Padmanabhan
Quality Assurance Specialist, Technology Center 2100, Workgroup 2180

UNITED STATES PATENT AND TRADEMARK OFFICE

Commissioner for Patents
United States Patent and Trademark Office
P.O. Box 1450
Alexandria, VA 22313-1450
www.uspto.gov

COPY MAILED
NOV 1 6 2006
OFFICE OF PETITIONS

WELSH & FLAXMAN LLC
2000 DUKE STREET, SUITE 100
ALEXANDRIA VA 22314

In re Application of
Stuart H. Miller
Application No. 11/581,402
Filed: October 17, 2006
Attorney Docket No.: MILL-002-CIP

: DECISION GRANTING PETITION

This is a decision on the petition filed November 3, 2006, in response to the "Notice of Omitted Items" mailed November 2, 2006, which is treated under 37 CFR 1.182.

The instant application was filed October 17, 2006 and a filing date was accorded. However, the Notice indicated that Figures 5 and 6 described in the specification appeared to have been omitted.

Petitioner asserts that Figures 5 and 6 were among the papers filed on October 17, 2006, and submits, *inter alia*, a "legible" postcard receipt in evidence thereof. The postcard receipt, identifies the application and acknowledges, inter alia, that the application included 8 sheets of drawings and bears a United States Patent and Trademark Office date-stamp of October 17, 2006. However, only seven (7) sheets of drawing figures is of record and while the postcard did not specifically itemize the number of Figures, it is obvious that Figures 5 and 6 were on sheet 3 of 8. Additionally, the postcard receipt lacks any notation of non-receipt of any item listed. In view thereof, the petition is **GRANTED.**

Given the basis for granting the petition, no petition fee is due. Petitioner's deposit account no. 01-2221 will be credited in the amount of $400.00.

This matter will be forwarded to the Office of Initial Patent Examination (OIPE) for further processing, using the application papers received in the Office on October 17, 2006 and Figures 5 and 6 submitted on petition November 3, 2006.

Telephone inquiries regarding this decision should be directed to the undersigned Petitions Attorney at (571) 272-3212.

Patricia Faison-Ball

Patricia Faison-Ball
Senior Petitions Attorney
Office of Petitions

UNITED STATES PATENT AND TRADEMARK OFFICE

UNITED STATES DEPARTMENT OF COMMERCE
United States Patent and Trademark Office
Address: COMMISSIONER FOR PATENTS
P.O. Box 1450
Alexandria, Virginia 22313-1450
www.uspto.gov

APPLICATION NO.	FILING DATE	FIRST NAMED INVENTOR	ATTORNEY DOCKET NO.	CONFIRMATION NO.
11/581,409	10/17/2006	Osamu Furukawa	Q97651	8714

7590 07/02/2009
SUGHRUE-265550
2100 PENNSYLVANIA AVE. NW
WASHINGTON, DC 20037-3213

EXAMINER
GOYAL, SHIKHA

ART UNIT	PAPER NUMBER
2816	

MAIL DATE	DELIVERY MODE
07/02/2009	PAPER

DECISION GRANTING PETITION UNDER 37 CFR 1.138(d)

The declaration of express abandonment is recognized

This is in response to the petition under 37 CFR 1.138(d), requesting for a refund of any previously paid search fee and excess claims fee in the above-identified application.

The petition is granted.

The express abandonment is recognized. Any previously paid search fee and excess claims fee are hereby refunded.

Telephone inquiries should be directed to the Office of Data Management at (571) 272-4200.

Nioni Farmer

Patent Publication Branch
Office of Data Management

Refund Ref:
07/02/2009 NFARMER 0000167825

CHECK Refund Total: $500.00

Adjustment date: 07/02/2009 NFARMER
10/18/2006 LWONDIM1 00000055 11581409
02 FC:1111 -500.00 OP

FORM PET651G (Rev. 08/07)

UNITED STATES PATENT AND TRADEMARK OFFICE

UNITED STATES DEPARTMENT OF COMMERCE
United States Patent and Trademark Office
Address: COMMISSIONER FOR PATENTS
P.O. Box 1450
Alexandria, Virginia 22313-1450
www.uspto.gov

APPLICATION NO.	FILING DATE	FIRST NAMED INVENTOR	ATTORNEY DOCKET NO.	CONFIRMATION NO.
11/581,414	10/17/2006	Yasuhiko Yamaguchi	SUN-5542	8715

24956 7590 06/25/2009
MATTINGLY & MALUR, P.C.
1800 DIAGONAL ROAD
SUITE 370
ALEXANDRIA, VA 22314

EXAMINER
DEWS, BROOKE J

ART UNIT	PAPER NUMBER
2181	

MAIL DATE	DELIVERY MODE
06/25/2009	PAPER

Please find below and/or attached an Office communication concerning this application or proceeding.

The time period for reply, if any, is set in the attached communication.

UNITED STATES PATENT AND TRADEMARK OFFICE

COMMISSIONER FOR PATENTS
UNITED STATES PATENT AND TRADEMARK OFFICE
P.O. BOX 1450
ALEXANDRIA, VA 22313-1450
www.uspto.gov

MATTINGLY & MALUR, P.C.
1800 DIAGONAL ROAD
SUITE 370
ALEXANDRIA VA 22314

In re Application of: YAMAGUCHI et al.
Application No. 11/581414
Attorney Docket No. SUN-5542
Filed: October 17, 2006
For: STORAGE SYSTEM AND DATA INPUT/OUTPUT CONTROL METHOD

DECISION ON PETITION

This is a decision on the petition filed on April 15, 2009, requesting that the Non-Final action mailed December 30, 2008 be reissued with a reset date, since the office action was not received by applicant. The petition is being treated as a petition under 37 C.F.R. § 1.181.

The petition is hereby **GRANTED**.

Applicable Prosecution History

October 17, 2006	Application filed.
June 13, 2008	Non-Final action mailed.
September 15, 2008	Response with Amendments filed.
December 30, 2008	Restriction Requirement mailed.
March 12, 2009	Instant Petition filed.

RELIEF REQUESTED

The instant petition requests that the Non-Final action mailed December 30, 2008 be reissued with a reset date, since the action was not received by Applicant, and Applicant discovered the Action in PAIR only on March 13, 2009.

REGULATIONS AND PRACTICE

MPEP 710.06 [R-6] Situations When Reply Period Is Reset or Restarted, states in part: The Office will grant a petition to restart the previously set period for reply to an Office action to run from the date of receipt of the Office action at the correspondence address when the following criteria are met:
(A) the petition is filed within 2 weeks of the date of receipt of the Office action at the correspondence address;
(B) a substantial portion of the set reply period had elapsed on the date of receipt (e.g., at least 1 month of a 2- or 3-month reply period had elapsed); and
(C) the petition includes (1) evidence showing the date of receipt of the Office action at the correspondence address (e.g., a copy of the Office action having the date of receipt of the Office action at the correspondence address stamped thereon, a copy of the envelope (which contained the Office action) having the date of receipt of the Office action at the correspondence address stamped thereon, etc.), and (2) a statement setting forth the date of receipt of the Office action at the correspondence address and explaining how the evidence being presented establishes the date of receipt of the Office action at the correspondence address.

MPEP 711.03(c) states in part:
To minimize costs and burdens to practitioners and the Office, the Office has modified the showing required to establish nonreceipt of an Office action. The showing required to establish nonreceipt of an Office communication must include a statement from the practitioner **>describing the system used for recording an Office action received at the correspondence address of record with the USPTO. The statement should establish that the docketing system is sufficiently reliable. It is expected that the record would include, but not be limited to, the application number, attorney docket number, the mail date of the Office action and the due date for the response.

Practitioner must state that the Office action was not received at the correspondence address of record, and that a search of the practitioner's record(s), including any file jacket or the equivalent, and the application contents, indicates that the Office action was not received. A copy of the record(s) used by the practitioner where the non-received Office action would have been entered had it been received is required.

A copy of the practitioner's record(s) required to show non-receipt of the Office action should include the master docket for the firm. That is, if a three month period for reply was set in the nonreceived Office action, a copy of the master docket report showing all replies docketed for a date three months from the mail date of the nonreceived Office action must be submitted as documentary proof of nonreceipt of the Office action. If no such master docket exists, the practitioner should so state and provide other evidence such as, but not limited to, the following: the application file jacket; incoming mail log; calendar; reminder system; or the individual docket record for the application in question.<

DECISION

Petitioner asserts that the Office communication mailed on December 30, 2008 was not received by applicants, and states the following:
1. Applicant's representative discovered on March 13, 2009 that the Action mailed on December 30, 2008 was entered in this application via the PAIR system.
2. Upon discovery of the above office action, Applicant's representative checked their records.
3. Applicant's representative enclose a copy of the individual docket record for the instant application, in support of their position.

The petition filed on April 15, 2009, is in compliance with the above-stated requirements.

Petitioner provided a statement that the Office communication in question was discovered on March 13, 2009, on the PAIR system, and was subsequently downloaded by Petitioner on March 30, 2009. A substantial portion of the set reply period had elapsed on the date of receipt.

For reasons set forth above, the petition is **GRANTED**.

Accordingly, the shortened statutory period that was originally set forth in the Office communication originally mailed on December 30, 2008 is hereby reset to run FROM THE RECEIPT DATE OF March 13, 2009.

Any inquiry concerning this decision should be directed to the undersigned whose telephone number is (571) 272-4210.

/Mano Padmanabhan/

Mano Padmanabhan
Quality Assurance Specialist, WG 2180
Technology Center 2100,
Computer Architecture, Software, and Information Security

UNITED STATES PATENT AND TRADEMARK OFFICE

Commissioner for Patents
United States Patent and Trademark Office
P.O. Box 1450
Alexandria, VA 22313-1450
www.uspto.gov

GARY R. NYE
489 KENNEDY VALLEY RD
LANDISBURG, PA 17040

COPY MAILED

FEB 1 8 2009

OFFICE OF PETITIONS

In re Application of	:	
Gary R. Nye	:	
Application No. 11/581,428	:	ON PETITION
Filed: October 17, 2006	:	
Attorney Docket No. None	:	

This is a decision in response to the petition under 37 CFR 1.137(b), filed November 24, 2008, to revive the above-identified application.

The petition is dismissed because it lacks the required petition fee pursuant to 37 CFR 1.17(m).

Effective October 2, 2008, the small entity fee for a petition to revive an unintentionally abandoned application was increased to $810. Using a Certificate of Mailing dated November 24, 2008, petitioner submitted a partial petition fee payment of 770 using his credit card. There is no authorization found in the papers filed November 24, 2008 to charge any fee deficiency. Since any fee paid on or after October 2, 2008, must be paid at the revised amount, petitioner must submit the petition fee deficiency of $40.

Any request for reconsideration of this decision must be submitted within TWO (2) MONTHS from the mail date of this decision. Extensions of time under 37 CFR 1.136(a) are permitted. The reconsideration request should include the $40 petition fee deficiency and a cover letter entitled "Renewed Petition under 37 CFR 1.137(b)." This is **not** a final agency action within the meaning of 5 U.S.C. § 704.

Further correspondence with respect to this matter should be delivered through one of the following mediums:

By mail: Mail Stop PETITIONS
Commissioner for Patents
Post Office Box 1450
Alexandria, VA 22313-1450

By hand: Customer Service Window
Mail Stop Petitions
Randolph Building
401 Dulany Street
Alexandria, VA 22314

By fax: (571) 273-8300
ATTN: Office of Petitions

By Internet: EFS-Web[1]

Any questions concerning this matter may be directed to the undersigned at (571) 272-3204.

Sherry D. Brinkley
Petitions Examiner
Office of Petitions

[1] www.uspto.gov/ebc/efs_help.html (for help using EFS-Web call the Patent Electronic Business Center at (866) 217-9197)

UNITED STATES PATENT AND TRADEMARK OFFICE

Commissioner for Patents
United States Patent and Trademark Office
P.O. Box 1450
Alexandria, VA 22313-1450
www.uspto.gov

MAILED

MAY 13 2009

OFFICE OF PETITIONS

GARY R. NYE
489 KENNEDY VALLEY RD
LANDISBURG, PA 17040

In re Application of Gary R. Nye Application No. 11/581,428 Filed: October 17, 2006 Attorney Docket No. None	: : : : :	ON PETITION

This is a decision on the renewed petition under 37 CFR 1.137(b) to revive the above-identified application, filed March 12, 2009.

The petition is **GRANTED**.

The application became abandoned for failure to timely pay the issue and publication fees on or before October 14, 2008, as required by the Notice of Allowance and Fee(s) Due, mailed July 11, 2008, which set a statutory period for reply of three (3) months. Accordingly, the application became abandoned on October 12, 2008. A Notice of Abandonment was subsequently mailed on November 19, 2008. A petition under the provisions of 37 CFR 1.137(b) was filed on November 24, 2008; however, the petition was dismissed in a decision mailed February 18, 2009. On March 12, 2009, the present petitions were filed.

The petitions satisfy the requirements of 37 CFR 1.137(b) in that petitioners have supplied (1) the reply in the form of the $720 issue fee and $300 publication fee; (2) the petition fee of $810; and (3) an adequate statement of unintentional delay.

The application is being referred to the Office of Data Management to be processed into a patent.

Telephone inquires related to this decision should be directed to the undersigned at (571) 272-3204. Telephone inquiries related to processing as a patent should be directed to (571) 272-4200.

Sherry D. Brinkley
Petitions Examiner
Office of Petitions

UNITED STATES PATENT AND TRADEMARK OFFICE

Commissioner for Patents
United States Patent and Trademark Office
P.O. Box 1450
Alexandria, VA 22313-1450
www.uspto.gov

OBLON, SPIVAK, MCCLELLAND MAIER & NEUSTADT, P.C.
1940 DUKE STREET
ALEXANDRIA VA 22314

COPY MAILED

OCT 15 2007

OFFICE OF PETITIONS

In re Application of	:	
Yasushi Nakazato et al	:	
Application No. 11/581,469	:	DECISION GRANTING PETITION
Filed: October 17, 2006	:	UNDER 37 CFR 1.313(c)(2)
Attorney Docket No. 297485US28DIV	:	

This is a decision on the petition under 37 CFR 1.313(c)(2), filed October 12, 2007, to withdraw the above-identified application from issue after payment of the issue fee.

The petition is **GRANTED**.

The above-identified application is withdrawn from issue for consideration of a submission under 37 CFR 1.114 (request for continued examination). *See* 37 CFR 1.313(c)(2).

Petitioner is advised that the issue fee paid on September 19, 2007 cannot be refunded. If, however, this application is again allowed, petitioner may request that it be applied towards the issue fee required by the new Notice of Allowance.[1]

Telephone inquiries should be directed to the undersigned at (571) 272-3208.

This application is being referred to Technology Center AU 2852 for processing of the request for continued examination under 37 CFR 1.114 and for consideration of the concurrently filed amendment.

Karen Creasy

Karen Creasy
Petitions Examiner
Office of Petitions

---

[1] *The request to apply the issue fee to the new Notice may be satisfied by completing and returning the new Part B – Fee(s) Transmittal Form (along with any balance due at the time of submission). Petitioner is advised that the Issue Fee Transmittal Form* ***must*** *be completed and timely submitted to avoid abandonment of the application.*

UNITED STATES PATENT AND TRADEMARK OFFICE

Commissioner for Patents
United States Patent and Trademark Office
P.O. Box 1450
Alexandria, VA 22313-1450
www.uspto.gov

Cypress Semiconductor
c/o Steven B. Kelber, Jagtiani + Guttag, LLP
10363-A Democracy Lane
Fairfax VA 22030

COPY MAILED

JUN 30 2009

OFFICE OF PETITIONS

In re Application of	:	
James A. Hunter et al.	:	
Application No. 11/581,479	:	DECISION ON PETITION
Filed: November 17, 2006	:	TO WITHDRAW
Attorney Docket No. CYPR-0017-CO1	:	FROM RECORD
	:	

This is a decision on the Request to Withdraw as attorney or agent of record under 37 CFR § 1.36(b), filed November 19, 2008.

The request is **NOT APPROVED** as moot.

A review of the file record indicates that the Steven B. Kelber has been reinstated by a Decision on Petition for Reinstatement from the Office of Enrollment and Discipline dated February 3, 2009. Accordingly, the request to withdraw under 37 C.F.R. § 1.36(b) is moot.

All future communications from the Office will continue to be directed to the above-listed address until otherwise notified by applicant.

Telephone inquires concerning this decision should be directed to JoAnne Burke at 571-272- 4584.

Ramesh Krishnamurthy

Ramesh Krishnamurthy
Petitions Examiner
Office of Petitions

UNITED STATES PATENT AND TRADEMARK OFFICE

UNITED STATES DEPARTMENT OF COMMERCE
United States Patent and Trademark Office
Address: COMMISSIONER FOR PATENTS
P.O. Box 1450
Alexandria, Virginia 22313-1450
www.uspto.gov

CANTOR COLBURN, LLP
20 Church Street
22nd Floor
Hartford, CT 06103

Mail Date: 04/20/2010

Applicant	: Huimin Chen	: DECISION ON REQUEST FOR
Patent Number	: 7655148	: RECALCULATION of PATENT
Issue Date	: 02/02/2010	: TERM ADJUSTMENT IN VIEW
Appliction No	: 11/581,504	: OF WYETH AND NOTICE OF INTENT TO
Filed	: 10/16/2006	: ISSUE CERTIFICATE OF CORRECTION
		:

The Request for Recalculation is **GRANTED** to the extent indicated.

The patent term adjustment has been determined to be **76** days. The USPTO will *sua sponte* issue a certificate of correction reflecting the amount of PTA days determined by the recalculation.

Prior to the issuance of the certificate of correction, the USPTO will afford patentee an opportunity to be heard and request reconsideration. Accordingly, patentee has **one month or thirty (30) days**, whichever is longer, to file a request for reconsideration of this patent term adjustment calculation. See 35 U.S.C. 154(b)(3)(B)(ii) and 37 CFR 1.322(a)(4). No extensions of time will be granted under 37 CFR 1.136.

Patentee should use document code PET.OP if electronically filing a request for reconsideration of this patent term adjustment calculation. The patentee must also include the information required by 37 CFR 1.705(b)(2) and the fee required by 37 CFR 1.18(e). If patentee does not file a timely request for reconsideration of this patent term adjustment calculation including the information required by 37 CFR 1.705(b)(2) and the fee required by 37 CFR 1.18(e), the USPTO will issue a certificate of correction reflecting the PTA determination noted above.

Patentee should be aware that in order to preserve the right to review in the United States District Court for the District of Columbia of the USPTO patent term adjustment determination, patentee must ensure that he or she also take the steps required under 35 U.S.C. 154(b)(4)(A) in a timely manner. Nothing in the request for recalculation should be construed as providing an alternative time frame for commencing a civil action under 35 U.S.C. 154(b)(4)(A).

Any questions concerning this decision should be directed to the Office of Patent Legal Administration at 571-272-7702.

UNITED STATES PATENT AND TRADEMARK OFFICE

UNITED STATES DEPARTMENT OF COMMERCE
United States Patent and Trademark Office
Address: COMMISSIONER FOR PATENTS
P.O. Box 1450
Alexandria, Virginia 22313-1450
www.uspto.gov

APPLICATION NO.	FILING DATE	FIRST NAMED INVENTOR	ATTORNEY DOCKET NO.	CONFIRMATION NO.
11/881,508	07/27/2007	Yong-Seok Yang	AB-2306 US	2299

7590 04/11/2009

Haynes and Boone, LLP
IP Section
2323 Victory Avenue
SUITE 700
Dallas, TX 75219

EXAMINER
PATEL, NIMESHKUMAR D

ART UNIT	PAPER NUMBER
2879	

MAIL DATE	DELIVERY MODE
04/11/2009	PAPER

DECISION GRANTING PETITION UNDER 37 CFR 1.138(d)

The declaration of express abandonment is recognized

This is in response to the petition under 37 CFR 1.138(d), requesting for a refund of any previously paid search fee and excess claims fee in the above-identified application.

The petition is granted.

The express abandonment is recognized. Any previously paid search fee and excess claims fee are hereby refunded.

Telephone inquiries should be directed to the Office of Data Management at (571) 272-4200.

Nimi Farmer

Patent Publication Branch
Office of Data Management

Adjustment date: 04/15/2009 NFARMER
07/30/2007 WABDELR1 00000035 502257 11881508
02 FC:1111 500.00 CR

FORM PET651G (Rev. 08/07)

UNITED STATES PATENT AND TRADEMARK OFFICE

UNITED STATES DEPARTMENT OF COMMERCE
United States Patent and Trademark Office
Address: COMMISSIONER FOR PATENTS
P.O. Box 1450
Alexandria, Virginia 22313-1450
www.uspto.gov

APPLICATION NO.	FILING DATE	FIRST NAMED INVENTOR	ATTORNEY DOCKET NO.	CONFIRMATION NO.
11/581,522	10/16/2006	Michael E. Evans	25772A	7994

22889 7590 03/13/2009
OWENS CORNING
2790 COLUMBUS ROAD
GRANVILLE, OH 43023

EXAMINER
ACKUN, JACOB K

ART UNIT	PAPER NUMBER
3728	

MAIL DATE	DELIVERY MODE
03/13/2009	PAPER

Please find below and/or attached an Office communication concerning this application or proceeding.

The time period for reply, if any, is set in the attached communication.

UNITED STATES PATENT AND TRADEMARK OFFICE

Commissioner for Patents
United States Patent and Trademark Office
P.O. Box 1450
Alexandria, VA 22313-1450
www.uspto.gov

OWENS CORNING
2790 COLUMBUS ROAD
GRANVILLE OH 43023

Applicant: Evans et al.
Appl. No.: 11/581,522
Filing Date: October 16, 2006
Title: PARTIALLY CUT LOOSEFILL PACKAGE
Attorney Docket No.: 25772A
Pub. No.: US 2008/0087557 A1
Pub. Date: April 17, 2008

This is a decision on the request for republication of patent application publication under 37 CFR 1.221(a), filed on March 10, 2009, for the above-identified application.

The request under 37 CFR 1.221(a) is DISMISSED.

37 CFR 1.221(a) requires "a copy of the application in compliance with the Office electronic filing system requirements and be accompanied by the publication fee set forth in § 1.18(d) and the processing fee set forth in § 1.17(i)". If the request for republication does not comply with the electronic filing system requirements, the republication will not take place and the publication fee set forth in § 1.18(d) will be refunded. The processing fee will be retained.

The applicant did not supply a copy of the application in compliance with the Office electronic filing system, as required by 37 CFR 1.221(a) because **the Applicant submitted the papers as a "Document for an existing application", which are entered into the application file, and not as a "Pre-Grant Publication" submission**. The request for republication does not comply with the electronic filing system requirements, thus republication will not take place.

Any request for republication under 37 CFR 1.221(a), must be submitted via the EFS system, **as a Pre-Grant publication submission.** The applicant is directed to the following website for additional instructions on how to submit a Pre-Grant Publication submission via the electronic filing system:

http://www.uspto.gov/ebc/portal/efs/pgpub_quickstart.pdf

Any questions or requests for reconsideration of the decision should be addressed as follows:

By mail to: Mail Stop PGPUB
Commissioner for Patents
P.O. Box 1450
Alexandria, Va. 22313-1450

By facsimile: 571-273-8300

Telephone inquiries regarding this correspondence should be directed to The Office of Data Management at 571-272-4200.

Tammy J. Koontz
Program & Management Analyst
Office of Data Management

Adjustment date: 03/13/2009 KKING1
03711/2009 INTEFSW 00000227 500568 11581522
01 FC:1504 300.00 CR

UNITED STATES PATENT AND TRADEMARK OFFICE

UNITED STATES DEPARTMENT OF COMMERCE
United States Patent and Trademark Office
Address: COMMISSIONER FOR PATENTS
P.O. Box 1450
Alexandria, Virginia 22313-1450
www.uspto.gov

APPLICATION NO.	FILING DATE	FIRST NAMED INVENTOR	ATTORNEY DOCKET NO.	CONFIRMATION NO.
11/581,528	10/16/2006	Scott Donald Whalen	9710C	7975

27752 7590 05/30/2008
THE PROCTER & GAMBLE COMPANY
INTELLECTUAL PROPERTY DIVISION - WEST BLDG.
WINTON HILL BUSINESS CENTER - BOX 412
6250 CENTER HILL AVENUE
CINCINNATI, OH 45224

EXAMINER
SRIVASTAVA, TARUN K

ART UNIT	PAPER NUMBER
3732	

MAIL DATE	DELIVERY MODE
05/30/2008	PAPER

Please find below and/or attached an Office communication concerning this application or proceeding.

The time period for reply, if any, is set in the attached communication.

Inventorship

1. In view of the papers filed 12/14/2007, it has been found that this nonprovisional application, as filed, through error and without deceptive intent, improperly set forth the inventorship, and accordingly, this application has been corrected in compliance with 37 CFR 1.48(a). The inventorship of this application has been changed by adding the following inventors: Ke - Ming Quan, Chanchal Kumar Ghosh, and Satyanarayana Majeti.

The application will be forwarded to the Office of Initial Patent Examination (OIPE) for issuance of a corrected filing receipt, and correction of Office records to reflect the inventorship as corrected.

/T. K. S./

Examiner, Art Unit 3732

Cris L Rodriguez

CRIS RODRIGUEZ
SUPERVISORY PATENT EXAMINER
TECHNOLOGY CENTER 3700

UNITED STATES PATENT AND TRADEMARK OFFICE

UNITED STATES DEPARTMENT OF COMMERCE
United States Patent and Trademark Office
Address: COMMISSIONER FOR PATENTS
P.O. Box 1450
Alexandria, Virginia 22313-1450
www.uspto.gov

APPLICATION NO.	FILING DATE	FIRST NAMED INVENTOR	ATTORNEY DOCKET NO.	CONFIRMATION NO.
11/581,561	10/16/2006	Wesley H. Morris	122-0002	8445

87419 7590 06/15/2010
ZAGORIN O"BRIEN GRAHAM LLP (122)
7600B N. CAPITAL OF TX HWY
SUITE 350
AUSTIN, TX 78731

EXAMINER
WARREN, MATTHEW E

ART UNIT	PAPER NUMBER
2815	

MAIL DATE	DELIVERY MODE
06/15/2010	PAPER

Please find below and/or attached an Office communication concerning this application or proceeding.

The time period for reply, if any, is set in the attached communication.

UNITED STATES PATENT AND TRADEMARK OFFICE

Commissioner for Patents
United States Patent and Trademark Office
P.O. Box 1450
Alexandria, VA 22313-1450
www.uspto.gov

ZAGORIN O"BRIEN GRAHAM LLP (122)
7600B N. CAPITAL OF TX HWY
SUITE 350
AUSTIN, TX 78731

In re Application of:	:	
MORRIS, WESLEY H	:	DECISION *SUA SPONTE*
Serial No.: 11/581,561	:	WITHDRAWING HOLDING
Filed: October 16, 2006	:	OF ABANDONMENT
Attorney Docket No.: 122-0002	:	

This is a decision, *sua sponte*, withdrawing the holding of abandonment of the above-identified application.

A final rejection was mailed on May 29, 2009, setting a three month shortened statutory period for response thereto. A notice of appeal along with a three month extension of time was filed Monday, November 30, 2009. A request for continued examination was filed June 1, 2010, along with a four month extension of time. As May 30, 2010 was a Sunday, and May 31, 2010 was a Federal Holiday, the RCE was timely filed.

Although no petition or request to withdraw the holding of abandonment in this application has been filed, the Notice of Abandonment is hereby vacated and the holding of abandonment is withdrawn in view of the fact that a Response was timely filed on June 1, 2010.

The RCE filed June 1, 2010 will be processed and the examiner will prepare an Office action in due course. Inconvenience to the applicant is regretted.

Any inquiry regarding this decision should be directed to Ken Parker, Supervisory Patent Examiner, at (571) 272-2298.

Edward Lefkowitz, *Acting* TC Director
Technology Center 2800
Semiconductors, Electrical and Optical
Systems and Components

UNITED STATES PATENT AND TRADEMARK OFFICE

Commissioner for Patents
United States Patent and Trademark Office
P.O. Box 1450
Alexandria, VA 22313-1450
www.uspto.gov

COPY MAILED

SEP 04 2009

OFFICE OF PETITIONS

BIRCH STEWART KOLASCH & BIRCH
PO BOX 747
FALLS CHURCH, VA 22040-0747

In re Application of	:	
Shuichi KAGAWA, et al.	:	
Application No. 11/581,576	:	DECISION GRANTING PETITION
Filed: October 17, 2006	:	UNDER 37 CFR 1.313(c)(2)
Attorney Docket No. **1190-0638PUS1**	:	

This is a decision on the petition under 37 CFR 1.313(c)(2), filed September 4, 2009, to withdraw the above-identified application from issue after payment of the issue fee.

The petition is **GRANTED**.

The above-identified application is withdrawn from issue for consideration of a submission under 37 CFR 1.114 (request for continued examination). *See* 37 CFR 1.313(c)(2).

Petitioner is advised that the issue fee paid on August 3, 2009 cannot be refunded. If, however, this application is again allowed, petitioner may request that it be applied towards the issue fee required by the new Notice of Allowance.[1]

Telephone inquiries should be directed to the undersigned at (571) 272-7253.

This application is being referred to Technology Center AU 2625 for processing of the request for continued examination under 37 CFR 1.114 and for consideration of the concurrently filed information disclosure statement.

/Monica A. Graves/
Petitions Examiner, Office of Petitions

---

[1] *The request to apply the issue fee to the new Notice may be satisfied by completing and returning the new Part B – Fee(s) Transmittal Form (along with any balance due at the time of submission). Petitioner is advised that the Issue Fee Transmittal Form* ***must*** *be completed and timely submitted to avoid abandonment of the application.*

UNITED STATES PATENT AND TRADEMARK OFFICE

Commissioner for Patents
United States Patent and Trademark Office
P.O. Box 1450
Alexandria, VA 22313-1450
www.uspto.gov

MAILED

SEP 22 2009

OFFICE OF PETITIONS

BIRCH STEWART KOLASCH & BIRCH
PO BOX 747
FALLS CHURCH, VA 22040-0747

In re Application of	:	
Satoshi Okamoto	:	
Application No. 11/581,584	:	DECISION ON PETITION
Filed: October 17, 2006	:	UNDER 37 CFR 1.313(c)(1)
Attorney Docket No. 4243-0131PUS1	:	

This is a decision on the petition filed September 18, 2009, which is being treated as a petition under 37 CFR 1.313(c)(1), to withdraw the above-identified application from issue after payment of the issue fee.

The petition is **DISMISSED.**

A review of the record reveals that the request for continued examination (RCE) filed with the petition on September 18, 2009, did not include a submission as required by 37 CFR 1.114. Therefore, the RCE was not in compliance with 37 CFR 1.114 and is improper. An offer to submit an information disclosure statement (IDS) is not a submission under 37 CFR 1.114.

37 CFR 1.313(c) provides that:

Once the issue fee has been paid, the application will not be withdrawn from issue upon petition by the applicant for any reason except:

(1) Unpatentability of one of more claims, which petition must be accompanied by an unequivocal statement that one or more claims are unpatentable, an amendment to such claim or claims, and an explanation as to how the amendment causes such claim or claims to be patentable;

(2) Consideration of a request for continued examination in compliance with 37 CFR 1.114; or

(3) Express abandonment of the application. Such express abandonment may be in favor of a continuing application.

Upon payment of the issue fee, an application will not be withdrawn from issue upon petition except for the reasons enumerated in 37 CFR 1.313(c). The circumstances of the above-identified application do not fall within any of those exceptions.

Since the petition does not comply with the requirements of 37 CFR 1.313(c), the petition cannot be granted.

Any questions concerning this matter may be directed to Irvin Dingle at (571) 272-3210.

This matter is being referred to the Office of Data Management.

/Irvin Dingle/
Irvin Dingle
Petitions Examiner
Office of Petitions

UNITED STATES PATENT AND TRADEMARK OFFICE

Commissioner for Patents
United States Patent and Trademark Office
P.O. Box 1450
Alexandria, VA 22313-1450
www.uspto.gov

HODGSON RUSS LLP
THE GUARANTY BUILDING
140 PEARL STREET
SUITE 100
BUFFALO, NY 14202-4040

COPY MAILED
APR 16 2009
OFFICE OF PETITIONS

In re Application of Claude et al. :
Application No. 11/581,602 : Decision on Petition
Filing Date: October 16, 2006 :
Attorney Docket No. 004631.00248 :

This is a decision on the petition under 37 CFR 1.137(b), filed January 16, 2009, to revive the above-identified application.

The petition is **granted**.

The above-identified application became abandoned for failure to reply in a timely manner to the final Office action mailed May 8, 2008, which set a shortened statutory period for reply of three (3) months. An extension of time under the provisions of 37 CFR 1.136(a) was not obtained. Accordingly, the above-identified application became abandoned on August 9, 2008. A Notice of Abandonment was mailed on December 22, 2008.

The instant petition requests revival of the application.

A grantable petition under 37 CFR 1.137(b) must be accompanied by:

(1) the reply required to the outstanding Office action or notice, unless previously filed,
(2) the petition fee,
(3) a statement that the entire delay in filing the required reply from the due date for the reply until the filing of a grantable petition pursuant to 37 CFR 1.137(b) was unintentional, and
(4) a terminal disclaimer and fee if the application was filed on or before June 8, 1995 or if the application is a design application.

Petitioner has submitted a reply to the final Office action in the form of a Notice of Appeal. Petitioner has submitted the required petition fee of $1.620. Petitioner has stated the entire delay in filing the required reply from the due date for the reply until the filing of a grantable petition pursuant to 37 CFR 1.137(b) was unintentional.

Petitioner has met the requirements to revive the above-identified application pursuant to 37 CFR 1.137(b). Therefore, the petition is granted and the application is revived.

The Notice of Appeal filed January 16, 2009, has been entered and made of record. Pursuant to MPEP 1205, the two-month time period for filing the appeal brief runs for the mailing date of this decision.

Technology Center Art Unit 3746 will be informed of the instant decision and the application will be further examined in due course.

Telephone inquiries regarding this communication should be directed to Petitions Attorney Steven Brantley at (571) 272-3203.

Charles Steven Brantley
Senior Petitions Attorney
Office of Petitions

UNITED STATES PATENT AND TRADEMARK OFFICE

Commissioner for Patents
United States Patent and Trademark Office
P.O. Box 1450
Alexandria, VA 22313-1450
www.uspto.gov

HODGSON RUSS LLP
THE GUARANTY BUILDING
140 PEARL STREET
SUITE 100
BUFFALO NY 14202-4040

COPY MAILED
MAR 08 2010

In re Application of	:	
Claude, et al.	:	
Application No. 11/581,602	:	DECISION
Filed/Deposited: 16 October, 2006	:	
Attorney Docket No. 004631.00248	:	

This is a decision on the petition filed on 16 November, 2009, considered as a petition under 37 C.F.R. §1.181 (no fee) requesting withdrawal of the holding of abandonment in the above-identified application.

The petition pursuant to 37 C.F.R. §1.181 is **DISMISSED**.

Any request for reconsideration of this decision must be submitted within TWO (2) MONTHS from the mail date of this decision. Extensions of time under 37 CFR §1.136(a) are permitted. The reconsideration request should include a cover letter entitled "Renewed Petition under 37 CFR §1.181.")."

This is **not** a final agency action within the meaning of 5 U.S.C. §704.

As to the Request to Withdraw
the Holding of Abandonment

Petitioner is directed to the Commentary at MPEP §711.03(c)(I) for guidance as to the proper showing and timeliness requirements for relief under 37 C.F.R. §1.181.

Petitioner appears not to comply with the guidance in the Commentary at MPEP §711.03(c)(I)—as discussed below, Petitioner has failed to satisfy the showing requirements set forth there. Petitioner may find it beneficial to review that material and move step-wise through that

guidance in the effort to satisfy the showing requirements (statements and supporting documentation).

BACKGROUND

The record reflects as follows:

Applicant failed to reply timely and properly following his filing on 16 January, 2009, of a Notice of Appeal as the required to accompany a petition to revive pursuant to 37 CFR §1.137(b), which petition was granted on 16 April, 2009, with required reply (*inter alia*, in the form of an Appeal Brief) due absent extension of time on or before 16 June, 2009. (Thus, in the absence of the extension of time, the application went abandoned by operation of law after midnight 16 June, 2009.)

The Office mailed the Notice of Abandonment on 4 September, 2009.

On 16 November, 2009, Petitioner filed, *inter alia*, a petition pursuant to 37 C.F.R. §1.181 and averred, *inter alia*, that the period of reply was extendable until that date, and therewith Petitioner filed a request and fee for extension of time—thus, Petitioner averred the abandonment previously entered was entered in error. It is notable, however, Petitioner failed to file timely and properly therewith a reply. Therefore, thereafter and as of this writing, the record reflects no reply filed on 16 November, 2009, and while the mailing of the Notice of Abandonment may have been premature, the application nonetheless stands abandoned.

Thus, Petitioner has failed to comply with the guidance as set forth below in the citation from the Manual of Patent Examining Procedure (MPEP).

Petitioner is directed to the appropriate guidance (MPEP §711.03(c), and requested to comply with it.

With regard to Petitioner's request to withdraw the holding of abandonment pursuant to 37 C.F.R. §1.181, the guidance in the Commentary at MPEP §711.03(c)(I) provides in pertinent part:

***

> 37 C.F.R. §1.10(c) through §1.10(e) and §1.10(g) set forth procedures for petitioning the Director of the USPTO to accord a filing date to correspondence as of the date of deposit of the correspondence as "Express Mail." A petition to withdraw the holding of abandonment relying upon a timely reply placed in "Express Mail" must include an appropriate petition under 37 C.F.R. §1.10(c), (d), (e), or (g) (see MPEP §513). When a paper is shown to have been mailed to the Office using the "Express Mail" procedures, the paper must be entered in PALM with the "Express Mail" date.

Similarly, applicants may establish that a reply was filed with a postcard receipt that properly identifies the reply and provides *prima facie* evidence that the reply was timely filed. See MPEP §503. For example, if the application has been held abandoned for failure to file a reply to a first Office action, and applicant has a postcard receipt showing that an amendment was timely filed in response to the Office action, then the holding of abandonment should be withdrawn upon the filing of a petition to withdraw the holding of abandonment. When the reply is shown to have been timely filed based on a postcard receipt, the reply must be entered into PALM using the date of receipt of the reply as shown on the post card receipt.

Where a certificate of mailing under 37 C.F.R. §1.8, but not a postcard receipt, is relied upon in a petition to withdraw the holding of abandonment, see 37 C.F.R. 1.8(b) and MPEP §512. As stated in 37 C.F.R. §1.8(b)(3) the statement that attests to the previous timely mailing or transmission of the correspondence must be on a personal knowledge basis, or to the satisfaction of the Director of the USPTO. If the statement attesting to the previous timely mailing is not made by the person who signed the Certificate of Mailing (i.e., there is no personal knowledge basis), then the statement attesting to the previous timely mailing should include evidence that supports the conclusion that the correspondence was actually mailed (e.g., copies of a mailing log establishing that correspondence was mailed for that application). When the correspondence is shown to have been timely filed based on a certificate of mailing, the correspondence is entered into PALM with the actual date of receipt (i.e., the date that the duplicate copy of the papers was filed with the statement under 37 C.F.R. §1.8).

37 C.F.R. §1.8(b) also permits applicant to notify the Office of a previous mailing or transmission of correspondence and submit a statement under 37 C.F.R. §1.8(b)(3) accompanied by a duplicate copy of the correspondence when a reasonable amount of time (e.g., more than one month) has elapsed from the time of mailing or transmitting of the correspondence. Applicant does not have to wait until the application becomes abandoned before notifying the Office of the previous mailing or transmission of the correspondence. Applicant should check the private Patent Application Information Retrieval (PAIR) system for the status of the correspondence before notifying the Office. See MPEP §512. [1]

***

Moreover, Petitioner's reply to the Notice of Abandonment is late under the rule (37 C.F.R. §1.181), and Petitioner is reminded of the guidance set forth in the Commentary at MPEP §711.03(c) (in pertinent part):

[1] *See*: MPEP §711.03(c) (I)(B).

***

C. Treatment of Untimely Petition To Withdraw Holding of Abandonment

37 C.F.R. 1.181(f) provides that, *inter alia*, except as otherwise provided, any petition not filed within 2 months from the action complained of may be dismissed as untimely. Therefore, any petition (under 37 C.F.R. §1.181) to withdraw the holding of abandonment not filed within 2 months of the mail date of a notice of abandonment (the action complained of) may be dismissed as untimely. 37 C.F.R. §1.181(f).

Rather than dismiss an untimely petition to withdraw the holding of abandonment under 37 C.F.R. §1.181(f), the Office may require a terminal disclaimer as a condition of granting an untimely petition to withdraw the holding of abandonment.

***

3. Utility and Plant Applications Filed on or After May 29, 2000

In utility and plant applications filed on or after May 29, 2000, a terminal disclaimer should **not** be required as a condition of granting an untimely petition to withdraw the holding of abandonment. This is because any patent term adjustment is automatically reduced under the provisions of 37 C.F.R. §1.704(c)(4) in applications subject to the patent term adjustment provisions of the American Inventors Protection Act of 1999 (AIPA) if a petition to withdraw a holding of abandonment is not filed within two months from the mailing date of the notice of abandonment, and if applicant does not receive the notice of abandonment, any patent term adjustment is reduced under the provisions of 37 C.F.R. §1.704(a) by a period equal to the period of time during which the applicant "failed to engage in reasonable efforts to conclude prosecution" (processing or examination) of the application.

Where the record indicates that the applicant intentionally delayed the filing of a petition to withdraw the holding of abandonment, the Office may simply dismiss the petition as untimely (37 C.F.R. §1.181(f)) solely on the basis of such intentional delay in taking action in the application without further addressing the merits of the petition. Obviously, intentional delay in seeking the revival of an abandoned application precludes relief under 37 C.F.R. §1.137(a) or (b) (***).

***

If Petitioner is unable to comply with and/or otherwise satisfy these requirements, he may wish to revive the application: Petitioner may wish to properly file a petition to the Commissioner requesting revival of an application abandoned due to unintentional delay under 37 C.F.R. §1.137(b). (See: http://www.uspto.gov/web/offices/pac/mpep/documents/0700_711_03_c.htm#sect711.03c)

Out of an abundance of caution, Petitioners always are reminded that the filing of a petition under 37 C.F.R. §1.181 does not toll any periods that may be running any action by the Office and a petition seeking relief under the regulation must be filed within two (2) months of the act complained of (*see*: 37 C.F.R. §1.181(f)), and those registered to practice and all others who make representations before the Office are reminded to inquire into the underlying facts of

representations made to the Office and support averments with the appropriate documentation–since all owe to the Office the continuing duty to disclose.[2]

The availability of applications and application papers online to applicants/practitioners who diligently associate their Customer Number with the respective application(s) now provides an applicant/practitioner on-demand information as to events/transactions in an application.

STATUTES, REGULATIONS

Congress has authorized the Commissioner to "revive an application if the delay is shown to the satisfaction of the Commissioner to have been "unavoidable." 35 U.S.C. §133 (1994).

Allegations as to the Request to Withdraw the Holding of Abandonment

The guidance in the Commentary at MPEP §711.03(c)(I) specifies the showing required and how it is to be made and supported.

Petitioner appears not to have made the showing required.

CONCLUSION

Accordingly, the petition pursuant to 37 C.F.R. §1.181 is **dismissed**.

ALTERNATIVE VENUE

Should Petitioner wish to revive the application, Petitioner may wish to properly file a petition to the Commissioner requesting revival of an application abandoned due to unintentional delay under 37 C.F.R. §1.137(b). (See: http://www.uspto.gov/web/offices/pac/mpep/documents/0700_711_03_c.htm#sect711.03c)

A petition to revive on the grounds of unintentional delay must be filed promptly and such petition must be accompanied by the reply, the petition fee, a terminal disclaimer and fee where appropriate and a statement that "the entire delay in filing the required reply from the due date for the reply until the filing of a grantable petition was unintentional." (The statement is in the form available online.)

---

[2] See supplement of 17 June, 1999. The Patent and Trademark Office is relying on Petitioner's duty of candor and good faith and accepting a statement made by Petitioner. See Changes to Patent Practice and Procedure, 62 Fed. Reg. at 53160 and 53178, 1203 Off. Gaz. Pat. Office at 88 and 103 (responses to comments 64 and 109)(applicant obligated under 37 C.F.R. §10.18 to inquire into the underlying facts and circumstances when providing statements to the Patent and Trademark Office).

Further correspondence with respect to this matter should be addressed as follows:

By Mail: Mail Stop PETITION
Commissioner for Patents
P. O. Box 1450
Alexandria, VA 22313-1450

By hand: U. S. Patent and Trademark Office
Customer Service Window, Mail Stop Petitions
Randolph Building
401 Dulany Street
Alexandria, VA 22314

By facsimile: **(571) 273-8300**
Attn: Office of Petitions

Telephone inquiries regarding this decision may be directed to the undersigned at (571) 272-3214—it is noted, however, that all practice before the Office is in writing (see: 37 C.F.R. §1.2[3]) and the proper authority for action on any matter in this regard are the statutes (35 U.S.C.), regulations (37 C.F.R.) and the commentary on policy (MPEP). Therefore, no telephone discussion may be controlling or considered authority for Petitioner's action(s).

/John J. Gillon, Jr./
John J. Gillon, Jr.
Senior Attorney
Office of Petitions

[3] The regulations at 37 C.F.R. §1.2 provide:
§1.2 Business to be transacted in writing.
All business with the Patent and Trademark Office should be transacted in writing. The personal attendance of applicants or their attorneys or agents at the Patent and Trademark Office is unnecessary. The action of the Patent and Trademark Office will be based exclusively on the written record in the Office. No attention will be paid to any alleged oral promise, stipulation, or understanding in relation to which there is disagreement or doubt.

UNITED STATES PATENT AND TRADEMARK OFFICE

Commissioner for Patents
United States Patent and Trademark Office
P.O. Box 1450
Alexandria, VA 22313-1450
www.uspto.gov

HODGSON RUSS LLP
THE GUARANTY BUILDING
140 PEARL STREET
SUITE 100
BUFFALO NY 14202-4040

MAILED

JUL 08 2010

OFFICE OF PETITIONS

In re Application of	:	
Claude, et al.	:	
Application No. 11/581,602	:	DECISION
Filed/Deposited: 16 October, 2006	:	
Attorney Docket No. 004631.00248	:	

This is a decision on the petition filed on 7 May, 2010, to revive an application under 37 C.F.R. §1.137(b) as having been abandoned due to unintentional delay.

The petition under 37 C.F.R. §1.137(b) is **DISMISSED**.

Any request for reconsideration of this decision must be submitted within TWO (2) MONTHS from the mail date of this decision. Extensions of time under 37 CFR §1.136(a) are permitted. The reconsideration request should include a cover letter entitled "Renewed Petition under 37 CFR §1.137(b)."

This is **not** a final agency action within the meaning of 5 U.S.C. §704.

As to the Allegations
of Unintentional Delay

The requirements of a grantable petition pursuant to 37 C.F.R. §1.137(b) are the petition and fee therefor, a reply, a proper statement and/or showing of unintentional delay under the regulation, and, where applicable, a terminal disclaimer and fee.

It appears that Petitioner has not satisfied the reply requirements under the Rule.

BACKGROUND

The record reflects as follows:

Applicant failed to reply timely and properly following his filing on 16 January, 2009, of a Notice of Appeal as the required to accompany a petition to revive pursuant to 37 CFR §1.137(b), which petition was granted on 16 April, 2009, with required reply (*inter alia*, in the form of an Appeal Brief) due absent extension of time on or before 16 June, 2009. (Thus, in the absence of the extension of time, the application went abandoned by operation of law after midnight 16 June, 2009.)

The Office mailed the Notice of Abandonment on 4 September, 2009.

On 16 November, 2009, Petitioner filed, *inter alia*, a petition pursuant to 37 C.F.R. §1.181 and averred, *inter alia*, that the period of reply was extendable until that date, and therewith Petitioner filed a request and fee for extension of time—thus, Petitioner averred the abandonment previously entered was entered in error. Notably, however, Petitioner failed to file timely and properly therewith a reply.

Therefore, thereafter the record reflected no reply filed on or before16 November, 2009.

The application went abandoned by operation of law after midnight 16 November, 2009.

The mailing of the Notice of Abandonment may have been premature, however, the application nonetheless stood abandoned.

The 16 November, 2009, petition was dismissed on 8 March, 2010.

On 7 May, 2010, Petitioner filed, *inter alia*, a petition (with fee) pursuant to 37 C.F.R. §1.137(b) and averred, *inter alia*, unintentional delay, but again Petitioner failed to file a reply and so failed to satisfy the reply requirement under the Rule.

*The deficiencies **must** be addressed and satisfied on any renewed petition.*

Petitioner's continued failure to satisfy the requirements under the Rule may be considered indicia of delay that is other than unintentional.

Petitioners attentions always are directed to the guidance in the Commentary at MPEP §711.03(c) in these matters.

The availability of applications and application papers online to applicants/practitioners who diligently associate their Customer Number with the respective application(s) now provides an applicant/practitioner on-demand information as to events/transactions in an application. Thus,

now if one wishes to know the progress in and/or status of an application or the accuracy of the data therein, one need only look at the file online.

Out of an abundance of caution, Petitioners always are reminded that those registered to practice *and* all others who make representations before the Office must inquire into the underlying facts of representations made to the Office and support averments with the appropriate documentation–since all owe to the Office the continuing duty to disclose.[1]

STATUTES, REGULATIONS

Congress has authorized the Commissioner to "revive an application if the delay is shown to the satisfaction of the Commissioner to have been "unavoidable." 35 U.S.C. §133 (1994).

The regulations at 37 C.F.R. §1.137(a) and (b) set forth the requirements for a Petitioner to revive a previously unavoidably or unintentionally, respectively, abandoned application.[2],[3]

As to the Allegations of Unintentional Delay

The requirements of a grantable petition pursuant Application No. 11/454,261 the petition and fee therefor, a reply, a proper statement and/or showing of unintentional delay under the regulation, and, where applicable, a terminal disclaimer and fee.

It appears that Petitioner has not satisfied the requirements under the rule.

CONCLUSION

The instant petition under 37 C.F.R. §1.137(b) is **dismissed**.

---

[1] See supplement of 17 June, 1999. The Patent and Trademark Office is relying on petitioner's duty of candor and good faith and accepting a statement made by Petitioner. See Changes to Patent Practice and Procedure, 62 Fed. Reg. at 53160 and 53178, 1203 Off. Gaz. Pat. Office at 88 and 103 (responses to comments 64 and 109)(applicant obligated under 37 C.F.R. §10.18 to inquire into the underlying facts and circumstances when providing statements to the Patent and Trademark Office). See specifically, the regulations at 37 C.F.R. §10.18.

[2] See: Changes to Patent Practice and Procedure; Final Rule Notice, 62 Fed. Reg. at 53158-59 (October 10, 1997), 1203 Off. Gaz. Pat. Office at 86-87 (October 21, 1997).

[3] The language of 35 U.S.C. §133 and 37 C.F.R. §1.137(a) is clear, unambiguous, and without qualification: the delay in tendering the reply to the outstanding Office action, as well as filing the first petition seeking revival, must have been unavoidable for the reply now to be accepted on petition. (Therefore, by example, an unavoidable delay in the payment of the Filing Fee might occur if a reply is shipped by the US Postal Service, but due to catastrophic accident, the delivery is not made.) Delays in responding properly raise the question whether delays are unavoidable. Where there is a question whether the delay was unavoidable, Petitioners must meet the burden of establishing that the delay was unavoidable within the meaning of 35 U.S.C. §133 and 37 C.F.R. §1.137(a) And the Petitioner must be diligent in attending to the matter. Failure to do so does not constitute the care required under Pratt, and so cannot satisfy the test for diligence and due care. (By contrast, unintentional delays are those that do not satisfy the very strict statutory and regulatory requirements of unavoidable delay, and also, by definition, are not intentional.))

Further correspondence with respect to this matter should be addressed as follows:

By Mail: Mail Stop PETITION
Commissioner for Patents
P. O. Box 1450
Alexandria, VA 22313-1450

By hand: U. S. Patent and Trademark Office
Customer Service Window, Mail Stop Petitions
Randolph Building
401 Dulany Street
Alexandria, VA 22314

The centralized facsimile number is **(571) 273-8300.**

Telephone inquiries regarding this decision may be directed to the undersigned at (571) 272-3214—it is noted, however, that all practice before the Office is in writing (see: 37 C.F.R. §1.2[4]) and the proper authority for action on any matter in this regard are the statutes (35 U.S.C.), regulations (37 C.F.R.) and the commentary on policy (MPEP). Therefore, no telephone discussion may be controlling or considered authority for Petitioner's action(s).

/John J. Gillon, Jr./
John J. Gillon, Jr.
Senior Attorney
Office of Petitions

[4] The regulations at 37 C.F.R. §1.2 provide:
§1.2 Business to be transacted in writing.
All business with the Patent and Trademark Office should be transacted in writing. The personal attendance of applicants or their attorneys or agents at the Patent and Trademark Office is unnecessary. The action of the Patent and Trademark Office will be based exclusively on the written record in the Office. No attention will be paid to any alleged oral promise, stipulation, or understanding in relation to which there is disagreement or doubt.

PATENT

IN THE UNITED STATES PATENT AND TRADEMARK OFFICE

Applicant:	William J. Dougherty		
Serial No.:	Unassigned 11/581624		
Filed:	October 18, 2006	Docket No.:	60282.0001US01
Title:	FILTERING MASK	A.U.	1723

CERTIFICATE UNDER 37 CFR 1.10:
"Express Mail" mailing label number: EV 737622838 US
Date of Deposit: ~~October 18, 2006~~ October 16, 2006

I hereby certify that this paper or fee is being deposited with the U.S. Postal Service "Express Mail Post Office to Addressee" service under 37 CFR 1.10 on the date indicated above and is addressed to Commissioner for Patents, P.O. Box 1450, Alexandria, Virginia 22313-1450.

By: Merri D. Cruz
Name: Merri D. Cruz

PETITION TO MAKE SPECIAL UNDER 37 C.F.R. 1.102(c)(1)

Commissioner for Patents
P.O. Box 1450
Alexandria, VA 22313-1450

Dear Sir:

In accordance with the provisions of 37 C.F.R. §1.102(c)(1), Applicant respectfully submits this petition to make the above identified application special due to Applicant's age being greater than 65. Pursuant to MPEP § 708.02(IV) a statement by applicant declaring his age is contained within this petition. In addition, pursuant to 37 C.F.R. §1.102(c)(1) no fee is believed due. However, the Commissioner is authorized to charge any additional required fees to Deposit Account 13-2725

Applicant's Statement Regarding Age

Consistent with the duty of disclose under 37 C.F.R. § 1.56; I, William J. Dougherty, declare that I was born the 28th Day of February in the Year of our Lord One Thousand Nine Hundred and Thirty-Three and am therefore greater than 65 years of age.

William J. Dougherty — Oct. 13, 2006
William J. Dougherty — Date

23552
PATENT TRADEMARK OFFICE

Respectfully submitted,

Allen R. Lang
Reg. No. 58,829

MERCHANT & GOULD
P.O. Box 2903
Minneapolis, MN 55402-0903
Telephone: 404.954.5100

JAN 16 2007
PETITION GRANTED

William Krynski
Special Program Examiner
Technology Center 1700

UNITED STATES PATENT AND TRADEMARK OFFICE

Commissioner for Patents
United States Patent and Trademark Office
P.O. Box 1450
Alexandria, VA 22313-1450
www.uspto.gov

CHOATE, HALL & STEWART LLP/WYETH LLC
PATENT GROUP
TWO INTERNATIONAL PLACE
BOSTON MA 02110

MAILED

JAN 20 2010

OFFICE OF PETITIONS

In re Application of Gregg B. Feiglson Application No. 11/581,638 Filed: October 16, 2006 Attorney Docket No. 2004658-0492 (AM102167)	: : : : :	DECISION ON PETITION TO WITHDRAW FROM RECORD

This is a decision on the Request to Withdraw as attorney or agent of record under 37 C.F.R. § 1.36(b), filed November 20, 2009.

The request is **NOT APPROVED**.

A grantable request to withdraw as attorney/agent of record must be signed by every attorney/agent seeking to withdraw or contain a clear indication that one attorney is signing on behalf of another/others.

The request was signed by Andrea L. Robidoux on behalf of all attorneys of record, but reflects an incorrect Customer Number. Accordingly, since the practitioners were appointed by a Customer Number upon filing of the instant application, the Request must reflect withdrawal of practitioners associated with the same Customer Number.

Further, a review of USPTO records reveals that the Request For Withdrawal As Attorney Or Agent And Change of Correspondence Address filed November 20, 2009 was improperly recorded as a Power of Attorney by the USPTO on January 15, 2010. In view of these facts the Power of Attorney must be corrected by reverting to the original Power of Attorney filed by Applicant December 15, 2006.

All future communications from the Office will be directed solely to the current address of record until proper instructions have been received.

Currently, there is no outstanding Office action that requires a reply.

Telephone inquires concerning this decision should be directed to the undersigned at (571) 272-7751. All other inquires concerning either the examination or status of the application should be directed to the Technology Center.

Joan Olszewski

Joan Olszewski
Petitions Examiner
Office of Petitions

UNITED STATES PATENT AND TRADEMARK OFFICE

Commissioner for Patents
United States Patent and Trademark Office
P.O. Box 1450
Alexandria, VA 22313-1450
www.uspto.gov

CHOATE, HALL & STEWART LLP/WYETH LLC
PATENT GROUP
TWO INTERNATIONAL PLACE
BOSTON MA 02110

MAILED

MAY 24 2010

OFFICE OF PETITIONS

In re Application of	:	
Gregg B. Feigelson	:	DECISION ON PETITION
Application No. 11/581,638	:	TO WITHDRAW
Filed: October 16, 2006	:	FROM RECORD
Attorney Docket No. 2004658-0492	:	
(AM102167)		

This is a decision on the renewed request to withdraw as attorney of record under 37 C.F.R. § 1.36, filed May 12, 2010.

The request is **NOT APPROVED**.

The Office will only accept correspondence address changes to the most current address information provided for the assignee of the entire interest *who properly became of record under 37 CFR 3.71,* or, if no assignee of the entire interest has properly been made of record, the most current address information provided for the first named inventor. 37 CFR 3.71(c) states:

> *An assignee becomes of record either in a national patent application or a reexamination proceeding by filing a statement in compliance with § 3.73(b) that is signed by a party who is authorized to act on behalf of the assignee.*

Therefore, as there is currently no Statement under 37 CFR 3.73(b) of record in the instant application, the Office cannot change the correspondence address to the address on the Request to Withdraw.

All future communications from the Office will continue to be directed to the above-listed address until otherwise notified by applicant.

Currently, a Notice of Allowance and Fee(s) Due (Notice) was mailed February 24, 2010 that requires a response.

Telephone inquires concerning this decision should be directed to the undersigned at (571) 272-7751. All other inquires concerning either the examination or status of the application should be directed to the Technology Center.

Joan Olszewski

Joan Olszewski
Petitions Examiner
Office of Petitions

UNITED STATES PATENT AND TRADEMARK OFFICE

Commissioner for Patents
United States Patent and Trademark Office
P.O. Box 1450
Alexandria, VA 22313-1450
www.uspto.gov

MORRISON & FOERSTER, LLP
555 WEST FIFTH STREET, SUITE 3500
LOS ANGELES, CA 90013-1024

COPY MAILED

AUG 0 1 2008

OFFICE OF PETITIONS

In re Application of	:	
BROOKS, et al.	:	
Application No. 11/581,645	:	DECISION ON PETITION
Filed: October 16, 2006	:	TO WITHDRAW
Attorney Docket No. **1016750022P3**	:	FROM RECORD
	:	

This is a decision on the Request to Withdraw as attorney or agent of record under 37 C.F.R. § 1.36(b), filed April 22, 2008.

The request is **DISMISSED** as moot.

A review of the file record indicates that the power of attorney to **MORRISON & FOERSTER, LLP** has been revoked by the assignee of the patent application on July 10, 2008. Accordingly, the request to withdraw under 37 C.F.R. § 1.36(b) is moot.

All future communications from the Office will continue to be directed to the below-listed address until otherwise notified by applicant.

Telephone inquires concerning this decision should be directed to the undersigned at 571-272-7253.

Monica A. Graves
Petitions Examiner
Office of Petitions

cc: **C.R. BARD, INC.**
BARD PERIPHERAL VASCULAR
1625 W. 3RD STREET - P.O. BOX 1740
TEMPE, AZ 85280-1740

UNITED STATES PATENT AND TRADEMARK OFFICE

Commissioner for Patents
United States Patent and Trademark Office
P.O. Box 1450
Alexandria, VA 22313-1450
www.uspto.gov

MAILED

JUN 02 2010

OFFICE OF PETITIONS

FLASTER/GREENBERG P.C.
Four Penn Center
1600 John F. Kennedy Boulevard
2nd Floor
PHILADELPHIA PA 19103

In re Application of	:
Meisner et al.	:
Application No. 11/581,666	: DECISION ON PETITION
Filed: October 16, 2006	: UNDER 37 CFR 1.78(a)(6)
Attorney Docket No. A0831-6U1 (PH2826NP)	:

This is a decision on the petition under 37 CFR 1.78(a)(6), filed January 25, 2010, to accept an unintentionally delayed claim under 35 U.S.C. § 119(e) for the benefit of priority to a prior-filed provisional application set forth in the concurrently filed amendment.

The petition is **DISMISSED.**

A petition under 37 CFR 1.78(a)(6) is only applicable to those applications filed on or after November 29, 2000. Further, the petition is appropriate only after expiration of the period specified in 37 CFR 1.78(a)(5)(ii) and must be filed during the pendency of the nonprovisional application. In addition, the petition must be accompanied by:

(1) the reference required by 35 U.S.C. § 119(e) and 37 CFR 1.78(a)(5)(i) to the prior-filed application, unless previously submitted;
(2) the surcharge set forth in § 1.17(t); and
(3) a statement that the entire delay between the date the claim was due under 37 CFR 1.78(a)(5)(ii) and the date the claim was filed was unintentional. The Director may require additional information where there is a question whether the delay was unintentional.

The petition does not comply with item (1) and (3).

As to item (1), this pending nonprovisional application was filed on October 16, 2006, within twelve months of the filing date of the prior-filed provisional application, Application No. 60/791,747 which was filed on April 13, 2006, and for which priority is claimed. A reference to the prior-filed provisional application has been included in an amendment to the first sentence of the specification following the title.

However, the amendment is not acceptable as drafted since it improperly incorporates by reference the prior-filed application. An incorporation by reference statement added after an application's filing date is not effective because no new matter can be added to an application after its filing date (*see* 35 U.S.C. § 132(a)). If an incorporation by reference statement is included in an amendment to the specification to add a benefit claim under 35 U.S.C. § 119(e) after the filing date of the application, the amendment would not be proper. When a benefit claim under 35 U.S.C. § 119(e) is submitted after the filing of an application, the reference to the prior application cannot include an incorporation by reference statement of the prior application. *See* Dart Industries v. Banner, 636 F.2d 684, 207 USPQ 273 (C.A.D.C. 1980). *Note* MPEP §§ 201.06(c) and 608.04(b).

As to item (3), 37 CFR § 1.78(a)(6) requires a statement that the entire delay between the date the claim was due under 37 CFR § 1.78(a)(5)(ii) and the date the claim was filed was unintentional. Since the statement appearing in the petition varies from the required language, the statement is being construed as the statement required by 37 CFR §1.78(a)(6). If this is not a correct reading of the statement appearing in the petition, petitioner should promptly notify the Office.

Accordingly, before the petition under 37 CFR 1.78(a)(6) can be granted, a renewed petition under 37 CFR 1.78(a)(6) and either an Application Data Sheet or a substitute amendment (complying with 37 CFR 1.121 and 37 CFR 1.76(b)(5)) deleting the incorporation by reference statement, are required.

Further correspondence with respect to this matter should be addressed as follows:

By mail: Mail Stop PETITIONS
Commissioner for Patents
Post Office Box 1450
Alexandria, VA 22313-1450

By hand: Customer Service Window
Mail Stop Petitions
Randolph Building
401 Dulany Street
Alexandria, VA 22314

By fax: (571) 273-8300
ATTN: Office of Petitions

Any questions concerning this matter may be directed to Charlema Grant at (571) 272-3215.

Anthony Knight
Director
Office of Petitions

UNITED STATES PATENT AND TRADEMARK OFFICE

Commissioner for Patents
United States Patent and Trademark Office
P.O. Box 1450
Alexandria, VA 22313-1450
www.uspto.gov

FLASTER/GREENBERG P.C.
Four Penn Center
1600 John F. Kennedy Boulevard
2nd Floor
PHILADELPHIA PA 19103

MAILED

JUL 12 2010

OFFICE OF PETITIONS

In re Application of :
Meisner et al. :
Application No. 11/581,666 : DECISION ON PETITION
Filed: October 16, 2006 : UNDER 37 CFR 1.78(a)(6)
Attorney Docket No. A0831-6U1 (PH2826NP) :

This is a decision on the renewed petition under 37 CFR 1.78(a)(6), filed June 7, 2010, to accept an unintentionally delayed claim under 35 U.S.C. §119(e) for the benefit of the prior-filed provisional application set forth in the concurrently filed amendment.

The petition is **GRANTED.**

A petition under 37 CFR 1.78(a)(6) is only applicable to those applications filed on or after November 29, 2000. Further, the petition is appropriate only after expiration of the period specified in 37 CFR 1.78(a)(5)(ii) and must be filed during the pendency of the nonprovisional application. In addition, the petition must be accompanied by:

(1) the reference required by 35 U.S.C. § 119(e) and 37 CFR 1.78(a)(5)(i) to the prior-filed application, unless previously submitted;
(2) the surcharge set forth in § 1.17(t); and
(3) a statement that the entire delay between the date the claim was due under 37 CFR 1.78(a)(5)(ii) and the date the claim was filed was unintentional. The Director may require additional information where there is a question whether the delay was unintentional.

Additionally, the instant nonprovisional application must be pending at the time of filing of the reference to the prior-filed provisional application as required by 37 CFR 1.78(a)(5)(ii). Further, the nonprovisional application claiming the benefit of the prior-filed provisional application must have been filed within twelve months of the filing date of the prior-filed provisional application.

All of the above requirements having been satisfied, the late claim for priority under 35 U.S.C. § 119(e) is accepted as being unintentionally delayed.

The granting of the petition to accept the delayed benefit claim to the prior-filed application under 37 CFR 1.78(a)(6) should not be construed as meaning that this application is entitled

to the benefit of the filing date of the prior-filed application. In order for this application to be entitled to the benefit of the prior-filed application, all other requirements under 35 U.S.C. §119(e) and 37 CFR 1.78(a)(4) and (a)(5) must be met. Similarly, the fact that the corrected Filing Receipt accompanying this decision on petition includes the prior-filed application should not be construed as meaning that applicant is entitled to the claim for benefit of priority to the prior-filed application noted thereon. Accordingly, the examiner will, in due course, consider this benefit claim and determine whether the application is entitled to the benefit of the earlier filing date.

A corrected Filing Receipt, which includes the priority claim to the prior-filed provisional application, accompanies this decision on petition.

Any inquiries concerning this decision may be directed to Charlema Grant at (571) 272-3215. All other inquiries concerning either the examination procedures or status of the application should be directed to the Technology Center.

The application is being forwarded to Technology Center AU 3752 for consideration by the examiner of the claim under 35 U.S.C. §119(e) for the benefit of priority to the prior-filed provisional application.

Christopher Bottorff
Supervisor
Office of Petitions

ATTACHMENT: Corrected Filing Receipt

UNITED STATES PATENT AND TRADEMARK OFFICE

UNITED STATES DEPARTMENT OF COMMERCE
United States Patent and Trademark Office
Address: COMMISSIONER FOR PATENTS
P.O. Box 1450
Alexandria, Virginia 22313-1450
www.uspto.gov

APPLICATION NUMBER	FILING or 371(c) DATE	GRP ART UNIT	FIL FEE REC'D	ATTY.DOCKET.NO	TOT CLAIMS	IND CLAIMS
11/581,666	10/16/2006	3752	1780	A0831-6U1 (PH2826NP)	33	2

CONFIRMATION NO. 8674

CORRECTED FILING RECEIPT

OC000000042504399

54380
FLASTER/GREENBERG P.C.
Four Penn Center
1600 John F. Kennedy Boulevard
2nd Floor
PHILADELPHIA, PA 19103

Date Mailed: 07/12/2010

Receipt is acknowledged of this non-provisional patent application. The application will be taken up for examination in due course. Applicant will be notified as to the results of the examination. Any correspondence concerning the application must include the following identification information: the U.S. APPLICATION NUMBER, FILING DATE, NAME OF APPLICANT, and TITLE OF INVENTION. Fees transmitted by check or draft are subject to collection. Please verify the accuracy of the data presented on this receipt. **If an error is noted on this Filing Receipt, please submit a written request for a Filing Receipt Correction. Please provide a copy of this Filing Receipt with the changes noted thereon. If you received a "Notice to File Missing Parts" for this application, please submit any corrections to this Filing Receipt with your reply to the Notice. When the USPTO processes the reply to the Notice, the USPTO will generate another Filing Receipt incorporating the requested corrections**

Applicant(s)

David Meisner, Monmouth Beach, NJ;
Walter Pitsch, Washington, NJ;
Tung H. Lu, Taiping City, TAIWAN;

Power of Attorney: The patent practitioners associated with Customer Number 000054380

Domestic Priority data as claimed by applicant

This appln claims benefit of 60/791,747 04/13/2006

Foreign Applications

If Required, Foreign Filing License Granted: 11/02/2006

The country code and number of your priority application, to be used for filing abroad under the Paris Convention, is **US 11/581,666**

Projected Publication Date: Not Applicable

Non-Publication Request: No

Early Publication Request: No

Title

Multifunction showerhead with automatic return function for enhanced water conservation

Preliminary Class

239

PROTECTING YOUR INVENTION OUTSIDE THE UNITED STATES

Since the rights granted by a U.S. patent extend only throughout the territory of the United States and have no effect in a foreign country, an inventor who wishes patent protection in another country must apply for a patent in a specific country or in regional patent offices. Applicants may wish to consider the filing of an international application under the Patent Cooperation Treaty (PCT). An international (PCT) application generally has the same effect as a regular national patent application in each PCT-member country. The PCT process **simplifies** the filing of patent applications on the same invention in member countries, but **does not result** in a grant of "an international patent" and does not eliminate the need of applicants to file additional documents and fees in countries where patent protection is desired.

Almost every country has its own patent law, and a person desiring a patent in a particular country must make an application for patent in that country in accordance with its particular laws. Since the laws of many countries differ in various respects from the patent law of the United States, applicants are advised to seek guidance from specific foreign countries to ensure that patent rights are not lost prematurely.

Applicants also are advised that in the case of inventions made in the United States, the Director of the USPTO must issue a license before applicants can apply for a patent in a foreign country. The filing of a U.S. patent application serves as a request for a foreign filing license. The application's filing receipt contains further information and guidance as to the status of applicant's license for foreign filing.

Applicants may wish to consult the USPTO booklet, "General Information Concerning Patents" (specifically, the section entitled "Treaties and Foreign Patents") for more information on timeframes and deadlines for filing foreign patent applications. The guide is available either by contacting the USPTO Contact Center at 800-786-9199, or it can be viewed on the USPTO website at http://www.uspto.gov/web/offices/pac/doc/general/index.html.

For information on preventing theft of your intellectual property (patents, trademarks and copyrights), you may wish to consult the U.S. Government website, http://www.stopfakes.gov. Part of a Department of Commerce initiative, this website includes self-help "toolkits" giving innovators guidance on how to protect intellectual property in specific countries such as China, Korea and Mexico. For questions regarding patent enforcement issues, applicants may call the U.S. Government hotline at 1-866-999-HALT (1-866-999-4158).

LICENSE FOR FOREIGN FILING UNDER

Title 35, United States Code, Section 184

Title 37, Code of Federal Regulations, 5.11 & 5.15

GRANTED

The applicant has been granted a license under 35 U.S.C. 184, if the phrase "IF REQUIRED, FOREIGN FILING LICENSE GRANTED" followed by a date appears on this form. Such licenses are issued in all applications where the conditions for issuance of a license have been met, regardless of whether or not a license may be required as

set forth in 37 CFR 5.15. The scope and limitations of this license are set forth in 37 CFR 5.15(a) unless an earlier license has been issued under 37 CFR 5.15(b). The license is subject to revocation upon written notification. The date indicated is the effective date of the license, unless an earlier license of similar scope has been granted under 37 CFR 5.13 or 5.14.

This license is to be retained by the licensee and may be used at any time on or after the effective date thereof unless it is revoked. This license is automatically transferred to any related applications(s) filed under 37 CFR 1.53(d). This license is not retroactive.

The grant of a license does not in any way lessen the responsibility of a licensee for the security of the subject matter as imposed by any Government contract or the provisions of existing laws relating to espionage and the national security or the export of technical data. Licensees should apprise themselves of current regulations especially with respect to certain countries, of other agencies, particularly the Office of Defense Trade Controls, Department of State (with respect to Arms, Munitions and Implements of War (22 CFR 121-128)); the Bureau of Industry and Security, Department of Commerce (15 CFR parts 730-774); the Office of Foreign AssetsControl, Department of Treasury (31 CFR Parts 500+) and the Department of Energy.

NOT GRANTED

No license under 35 U.S.C. 184 has been granted at this time, if the phrase "IF REQUIRED, FOREIGN FILING LICENSE GRANTED" DOES NOT appear on this form. Applicant may still petition for a license under 37 CFR 5.12, if a license is desired before the expiration of 6 months from the filing date of the application. If 6 months has lapsed from the filing date of this application and the licensee has not received any indication of a secrecy order under 35 U.S.C. 181, the licensee may foreign file the application pursuant to 37 CFR 5.15(b).

UNITED STATES PATENT AND TRADEMARK OFFICE

COMMISSIONER FOR PATENTS
UNITED STATES PATENT AND TRADEMARK OFFICE
P.O. BOX 1450
ALEXANDRIA, VA 22313-1450
www.uspto.gov

STORM LLP
BANK OF AMERICA PLAZA
901 MAIN STREET, SUITE 7100
DALLAS TX 75202

COPY MAILED
AUG 0 4 2008

Applicant: Emanuel
Appl. No.: 11/581,696
Filing Date: October 16, 2006
Title: LASER WITH BRAYTON CYCLE OUTLET PUMP
Attorney Docket: KSY 02841 C1US
Pub. No.: US 2007/0036193 A1
Pub. Date: February 15, 2007

This is a decision on the requests for a corrected patent application publication under 37 CFR 1.221(b), received on May 17, 2007 and October 17, 2007, for the above-identified application.

The request is DISMISSED.

Applicant requests that the application be republished because the patent application publication contains a material on the front page of the publication as the correspondence address is incorrect.

37 CFR 1.221(b) is applicable "only when the Office makes a material mistake which is apparent from Office records.... Any request for a corrected publication or revised patent application publication other than provided as provided in paragraph (a) of this section must be filed within **two months** from the date of the patent application publication. This period is not extendable." A material mistake must affect the public's ability to appreciate the technical disclosure of the patent application publication, to determine the scope of the patent application publication, or to determine the scope of the provisional rights that an applicant may seek to enforce upon issuance of a patent. [1]

The requests for corrected publication received on May 17, 2007 and October 17, 2007, were not timely filed under 37 CFR 1.221(b).

The instant request does not identify a mistake in the publication made by the Office under 37 CFR 1.221(b) with respect to the correcpondence address. The application was correctly printed

[1] Changes to Implement Eighteen-Month Publication of Patent Applications, 65 FR 57023, 57038 (Sept. 20, 2000), 1239, Off. Gaz. Pat. Office Notices 63, 75 (Oct. 10, 2000) (final rule).

with the correspondence address provided on the transmittal letter via customer number 32223, which was received on October 16, 2006.

Even if the Office had misprinted the correspondence address, an error in the correspondence address would not be a material Office error under 37 CFR 1.221(b), as an error in the correspondence address would not affect the understanding of the application. The mistake would not affect the public's ability to appreciate the technical disclosure of the patent application publication, or determine the scope of the patent application publication or determine the scope of the provisional rights that an applicant may seek to enforce upon issuance of a patent.

Applicant is reminded of his duty to conduct a reasonable inquiry before filing a paper before the Office. See MPEP 410.

Applicants' request for a corrected patent application publication on May 17, 2007 and October 17, 2007, may constitute a "failure to engage in reasonable efforts to conclude processing or examination of the application." See 1.704(c). This determination will be made on or after a mailing of a Notice of Allowance.

The applicant is advised that a "request for republication of an application previously published" may be filed under 37 CFR 1.221(a). Such a request for republication "must include a copy of the application compliance with the Office's electronic filing system requirements and be accompanied by the publication fee set forth in § 1.18(d) and the processing fee set forth in § 1.17(i)." If the request for republication does not comply with the electronic filing system requirements, the republication will not take place and the publication fee set forth in § 1.18(d) will be refunded. The processing fee will be retained.

Any request for republication under 37 CFR 1.221(a), must be submitted via the EFS system, as a "Pre-Grant Publication" and questions or request for reconsideration of the decision, should be addressed as follows:

By mail to: Mail Stop PGPUB
Commissioner for Patents
P.O. Box 1450
Alexandria, Va. 22313-1450

By facsimile: 571-273-8300

Inquiries relating to this matter may be directed to Mark Polutta at (571) 272-7709.

Mark Polutta
Senior Legal Advisor
Office of Patent Legal Administration
Office of the Deputy Commissioner
for Patent Examination Policy

UNITED STATES PATENT AND TRADEMARK OFFICE

Commissioner for Patents
United States Patent and Trademark Office
P.O. Box 1450
Alexandria, VA 22313-1450
www.uspto.gov

JJGJR.: 09-07

Paper No: __

COPY MAILED

OCT 01 2007

OFFICE OF PETITIONS

NATH & ASSOCIATES, PLLC
112 SOUTH WEST STREET
ALEXANDRIA VA 22314

In re Application of	:	
Kushnir, et al.	:	
Application No. 11/581,745	:	ON PETITION
Filed: 17 October, 2006	:	
Attorney Docket No. 277470	:	

This is a decision on the petition filed on 1 May, 2007, under 37 C.F.R. §1.47(a).

The Office regrets the delay in addressing this matter, however, the petition was provided to the attorneys in the Office of Petitions only at this writing.

For the reasons set forth below, the petition under 37 C.F.R. §1.47(a) is **GRANTED**.

BACKGROUND

The record indicates:

- the instant application was filed on 17 October, 2006, without, *inter alia*, a fully executed oath/declaration;
- on 8 November, 2006, the Office mailed a Notice of Missing Parts indicating, *inter alia*, that a fully executed oath/declaration (signed and dated) was required;
- on 1 May, 2007, Petitioner Gary M. Nath (Reg. No. 41,194) filed, *inter alia*, the original

petition, an oath/declaration signed by Messrs. I. Kushnir and A. Kushnir for themselves and on behalf of non-signing co-inventor Meir Botbol (Mr. Botbol), and Petitioner stated and evidenced (with a copy of the second transmittal letter) that the entire application (description, claims, abstract and drawings) was sent to and received by non-signing co-inventor Mr. Botbol–but that he has not signed the oath/declaraion.

Out of an abundance of caution, Petitioners always are reminded that those registered to practice *and* all others who make representations before the Office are reminded to inquire into the underlying facts of representations made to the Office and support averments with the appropriate documentation–since all owe to the Office the continuing duty to disclose.[1]

---

[1] See supplement of 17 June, 1999. The Patent and Trademark Office is relying on petitioner's duty of candor and good faith and accepting a statement made by Petitioner. See Changes to Patent Practice and Procedure, 62 Fed. Reg. at 53160 and 53178, 1203 Off. Gaz. Pat. Office at 88 and 103 (responses to comments 64 and 109)(applicant obligated under 37 C.F.R. §10.18 to inquire into the underlying facts and circumstances when providing statements to the Patent and Trademark Office).

Specifically, the regulations at 37 C.F.R. §10.18 provide:

§ 10.18 Signature and certificate for correspondence filed in the Patent and Trademark Office.
(a) For all documents filed in the Office in patent, trademark, and other non-patent matters, except for correspondence that is required to be signed by the applicant or party, each piece of correspondence filed by a practitioner in the Patent and Trademark Office must bear a signature by such practitioner complying with the provisions of §1.4(d), §1.4(e), or § 2.193(c)(1) of this chapter.
(b) By presenting to the Office (whether by signing, filing, submitting, or later advocating) any paper, the party presenting such paper, whether a practitioner or non-practitioner, is certifying that—

(1) All statements made therein of the party's own knowledge are true, all statements made therein on information and belief are believed to be true, and all statements made therein are made with the knowledge that whoever, in any matter within the jurisdiction of the Patent and Trademark Office, knowingly and willfully falsifies, conceals, or covers up by any trick, scheme, or device a material fact, or makes any false, fictitious or fraudulent statements or representations, or makes or uses any false writing or document knowing the same to contain any false, fictitious or fraudulent statement or entry, shall be subject to the penalties set forth under 18 U.S.C. 1001, and that violations of this paragraph may jeopardize the validity of the application or document, or the validity or enforceability of any patent, trademark registration, or certificate resulting therefrom; and

(2) To the best of the party's knowledge, information and belief, formed after an inquiry reasonable under the circumstances, that —

(i) The paper is not being presented for any improper purpose, such as to harass someone or to cause unnecessary delay or needless increase in the cost of prosecution before the Office;

(ii) The claims and other legal contentions therein are warranted by existing law or by a nonfrivolous argument for the extension, modification, or reversal of existing law or the establishment of new law;

(iii) The allegations and other factual contentions have evidentiary support or, if specifically so identified, are likely to have evidentiary support after a reasonable opportunity for further investigation or discovery; and

(iv) The denials of factual contentions are warranted on the evidence, or if specifically so identified, are reasonably based on a lack of information or belief.

(c) Violations of paragraph (b)(1) of this section by a practitioner or non-practitioner may jeopardize the validity of the application or document, or the validity or enforceability of any patent, trademark registration, or certificate resulting therefrom. Violations of any of paragraphs (b)(2)(i) through (iv) of this section are, after notice and reasonable opportunity to respond, subject to such sanctions as deemed appropriate by the Commissioner, or the Commissioner's designee, which may include, but are not limited to, any combination of —

(1) Holding certain facts to have been established;
(2) Returning papers;
(3) Precluding a party from filing a paper, or presenting or contesting an issue;
(4) Imposing a monetary sanction;
(5) Requiring a terminal disclaimer for the period of the delay; or
(6) Terminating the proceedings in the Patent and Trademark Office.

(d) Any practitioner violating the provisions of this section may also be subject to disciplinary action. See § 10.23(c)(15).
[Added 50 FR 5175, Feb. 6, 1985, effective Mar. 8, 1985; para. (a) revised, 58 FR 54494, Oct. 22, 1993, effective Nov. 22, 1993; paras. (a) & (b) revised, paras. (c) & (d) added, 62 FR 53131, Oct. 10, 1997, effective Dec. 1, 1997; para. (a) revised, 69 FR 56481; Sept. 21, 2004, effective Oct. 21, 2004]

This application and its papers have been reviewed and found in compliance with 37 C.F.R. §1.47(a).

This application hereby is **ACCORDED status under 37 C.F.R. §1.47(a)**.

As provided under 37 C.F.R. §1.47(a), the Office will forward notice of this application's filing to the non-signing inventor at the address given in the petition.

Notice of the filing of this application also will be published in the Official Gazette.

This file is being released to OIPE for processing as necessary to reflect the instant decision before being released for further processing in due course.

While telephone inquiries regarding this decision may be directed to the undersigned at (571) 272-3214, it is noted that all practice before the Office is in writing (see: 37 C.F.R. §1.2[2]) and the proper authority for action on any matter in this regard are the statutes (35 U.S.C.), regulations (37 C.F.R.) and the commentary on policy (MPEP). Therefore, no telephone discussion may be controlling or considered authority for Petitioner's/Caller's action(s).

John J. Gillon, Jr.
Senior Attorney
Office of Petitions

[2] The regulations at 37 C.F.R. §1.2 provide:
§1.2 Business to be transacted in writing.
All business with the Patent and Trademark Office should be transacted in writing.The personal attendance of applicants or their attorneys or agents at the Patent and Trademark Office is unnecessary. The action of the Patent and Trademark Office will be based exclusively on the written record in the Office. No attention will be paid to any alleged oral promise, stipulation,or understanding in relation to which there is disagreement or doubt.

UNITED STATES PATENT AND TRADEMARK OFFICE

Commissioner for Patents
United States Patent and Trademark Office
P.O. Box 1450
Alexandria, VA 22313-1450
www.uspto.gov

JJGJR.: 09-07

Paper No: __

COPY MAILED

OCT 01 2007

OFFICE OF PETITIONS

MEIR BOTOL
27 NEVE HADARIM STREET
PARDES HANA 37017
ISRAEL

In re Application of	:	
Kushnir, et al.	:	
Application No. 11/581,745	:	COMMUNICATION
Filed: 17 October, 2006	:	
Attorney Docket No. 277470	:	

Dear Meir Botol:

You are named as inventor in the above identified United States patent application, filed under the provisions of 35 U.S.C. §116 (United States Code), and 37 C.F.R. §1.47,[1] ¶a, Rules of

---

[1] The regulations at 37 C.F.R. §1.47 provide:

§ 1.47 Filing when an inventor refuses to sign or cannot be reached.

(a) If a joint inventor refuses to join in an application for patent or cannot be found or reached after diligent effort, the application may be made by the other inventor on behalf of himself or herself and the nonsigning inventor. The oath or declaration in such an application must be accompanied by a petition including proof of the pertinent facts, the fee set forth in §1.17(h), and the last known address of the nonsigning inventor. The nonsigning inventor may subsequently join in the application by filing an oath or declaration complying with §1.63.

(b) Whenever all of the inventors refuse to execute an application for patent, or cannot be found or reached after diligent effort, a person to whom an inventor has assigned or agreed in writing to assign the invention, or who otherwise shows sufficient proprietary interest in the matter justifying such action, may make application for patent on behalf of and as agent for all the inventors. The oath or declaration in such an application must be accompanied by a petition including proof of the pertinent facts, a showing that such action is necessary to preserve the rights of the parties or to prevent irreparable damage, the fee set forth in §1.17(h), and the last known address of all of the inventors. An inventor may subsequently join in the application by filing an oath or declaration complying with §1.63.

© The Office will send notice of the filing of the application to all inventors who have not joined in the application at the address(es) provided in the petition under this section, and publish notice of the filing of the application in the *Official Gazette*. The Office may dispense with this notice provision in a continuation or divisional application, if notice regarding the filing of the prior application was given to the nonsigning inventor(s).

[47 Fed. Reg. 41275, Sept. 17, 1982, effective Oct. 1, 1982; 48 Fed. Reg. 2709, Jan. 20, 1983, effective Feb. 27, 1983; revised, 62 Fed. Reg. 53131, Oct. 10, 1997, effective Dec. 1, 1997; revised, 65 Fed. Reg. 54604, Sept. 8, 2000, effective Nov. 7, 2000]

Practice in Patent Cases. Should a patent be granted on the application you will be designated therein as inventor.

As a named inventor you are entitled to inspect any paper in the file wrapper of the application, order copies of all or any part thereof (at a prepaid cost per 37 C.F.R. §1.19) or make your position of record in the application. Alternatively, you may arrange to do any of the preceding through a registered patent attorney or agent presenting written authorization from you. If you care to join the application, counsel of record (see below) would presumably assist you. Joining in the application would entail the filing of an appropriate oath or declaration by you pursuant to 37 C.F.R. §1.63.

Requests for information regarding your application should be directed to the File Information Unit at (703) 308-2733.

Information regarding how to pay for and order a copy of the application, or a specific paper in the application, should be directed to Certification Division at (703) 308-9726 or toll-free: (800) 972-6382 (outside the Washington D.C. area).

While telephone inquiries regarding this decision may be directed to the undersigned at (571) 272-3214, it is noted that all practice before the Office is in writing (see: 37 C.F.R. §1.2[2]) and the proper authority for action on any matter in this regard are the statutes (35 U.S.C.), regulations (37 C.F.R.) and the commentary on policy (MPEP). Therefore, no telephone discussion may be controlling or considered authority for Petitioner's/Caller's action(s).

John J. Gillon, Jr.
Senior Attorney
Office of Petitions

Counsel of Record:
NATH & ASSOCIATES, PLLC
112 SOUTH WEST STREET
ALEXANDRIA VA 22314

---

[2] The regulations at 37 C.F.R. §1.2 provide:
§1.2 Business to be transacted in writing.
All business with the Patent and Trademark Office should be transacted in writing.The personal attendance of applicants or their attorneys or agents at the Patent and Trademark Office is unnecessary. The action of the Patent and Trademark Office will be based exclusively on the written record in the Office. No attention will be paid to any alleged oral promise, stipulation,or understanding in relation to which there is disagreement or doubt.

SPE RESPONSE FOR CERTIFICATE OF CORRECTION

Paper No.: 080508

DATE : 7-21-08

TO SPE OF : ART UNIT 2824

SUBJECT : Request for Certificate of Correction for Appl. No.: 11/581748 Patent No.: 7382646

Please respond to this request for a certificate of correction within 7 days.

Please review the requested changes/corrections as shown in the **COCIN** document(s) in the IFW application image. No new matter should be introduced, nor should the scope or meaning of the claims be changed.

Please check claims

Please complete the response (see below) and forward the completed response to scanning using document code **COCX**.

Carrie Young

Certificates of Correction Branch

703-308-9390 ext. 117

Thank You For Your Assistance

The request for issuing the above-identified correction(s) is hereby:

Note your decision on the appropriate box.

- ☑ **Approved** — All changes apply.
- ☐ **Approved in Part** — Specify below which changes **do not** apply.
- ☐ **Denied** — State the reasons for denial below.

Comments: Claim 55 (now claim 14) was orginally filed (See supplemental Office Action on 2/29/08)

— Tuan Nguyen 8/4/08

RICHARD T. ELMS
SUPERVISORY PATENT EXAMINER
TECHNOLOGY CENTER 2800

SPE 8/5/08 2824 Art Unit

OK To Enter.
Dw (8/4/08) 11/581748

CGJC

OIPE IAP22 JUN 23 2008 PATENT & TRADEMARK OFFICE

IN THE UNITED STATES PATENT AND TRADEMARK OFFICE

Applicant: John T. Moore et al.
Patent No.: 7,382,646
Issue Date: June 3, 2008

Examiner: Tuan T Nguyen
Group Art Unit: 2824
Docket No: 2001-1099.03/US

Title: MEMORY ARCHITECTURE CONTAINING A HIGH DENSITY MEMORY ARRAY OF SEMI-VOLATILE OR NON-VOLATILE MEMORY ELEMENTS

Commissioner for Patents
Office of Patent Publication
ATTN: Certificate of Correction Branch

We are transmitting herewith the attached:

X Request for Certificate of Correction.
X Certificate of Correction Form - PTO-1050 (in duplicate)
X A return postcard.

Please charge any additional fees or credit overpayment to Deposit Account No. 13-3092.

Customer Number: 26809

Certificate
JUN 25 2008
of Correction

Respectfully submitted,

Date: June 19, 2008

By: [signature]
Russ Slifer
Reg. No. 39,838

CERTIFICATE UNDER 37 CFR 1.8: The undersigned hereby certifies that this correspondence is being deposited with the United States Postal Service with sufficient postage as first class mail, in an envelope addressed to: Commissioner of Patents and Trademarks, P.O. Box 1450, Alexandria VA 22313-1450, on this 19th day of June 2008.

Christine Hartness
Name

Christine Hartness
Signature

RECEIVED-UNITED
Patent Publication
JUN 25 2008

UNITED STATES PATENT AND TRADEMARK OFFICE

Commissioner for Patents
United States Patent and Trademark Office
P.O. Box 1450
Alexandria, VA 22313-1450
www.uspto.gov

Kevin J. Forrestal
ADVANCED APPLIED ADHESIVES
10080 Willow Creek Road
San Diego CA 92131

COPY MAILED

DEC 27 2007

OFFICE OF PETITIONS

In re Application of :
Deborah Forray :
Application No. 11/581,759 :
Filed: October 16, 2006 :
Attorney Docket No. AAA1230-1 :

DECISION ON PETITION

This is a decision on the petition under 37 CFR 1.137(b), filed June 26, 2007, to revive the above-identified application.

The petition is **GRANTED.**

The application became abandoned for failure to reply in a timely manner to the Notice to File Missing Parts of Nonprovisional Application (Notice), mailed November 2, 2006, which required the submission of: an executed oath or declaration; $150 statutory basic filing fee; $65 surcharge fee; $250 search fee; $100 examination fee; and a $300 fee for three independent claims over three. The Notice set a period for reply of two (2) months from the mail date of the Notice. No extensions of time were obtained under the provisions of 37 CFR 1.136(a). Accordingly, the application became abandoned on January 3, 2007.

The petition satisfies the requirements of 37 CFR 1.137(b) in that petitioner has supplied (1) the items required by the Notice of November 2, 2006, (2) the petition fee of $750, and (3) a proper statement of unintentional delay. Accordingly, the failure to timely reply to the Notice of November 2, 2006 is accepted as being unintentionally delayed.

An extension of time under 37 CFR 1.136 must be filed prior to the expiration of the maximum extendable period for reply. *See* In re Application of S, 8 USPQ2d 1630, 1631 (Comm'r Pats. 1988). Since the $1,080 extension of time fee submitted with the petition on June 26, 2007 was subsequent to the maximum extendable period for reply, this fee is unnecessary. Petitioner may request a refund of the $1,080 extension of time fee submitted by writing to the following address: Mail Stop 16, Director of the

U.S. Patent and Trademark Office, P. O. Box 1450, Alexandria, VA 22313-1450.

This application is being referred to the Office of Initial Patent Examination for further processing in accordance with this decision.

Telephone inquiries concerning this decision should be directed to the undersigned at (571) 272-3218 or to the Office of Petitions Help Desk at (571) 272-3282 after January 3, 2008.

Frances Hicks
Petitions Examiner
Office of Petitions

UNITED STATES PATENT AND TRADEMARK OFFICE

Commissioner for Patents
United States Patent and Trademark Office
P.O. Box 1450
Alexandria, VA 22313-1450
www.uspto.gov

DONALD N. HALGREN
35 CENTRAL STREET
MANCHESTER, MA 01944

COPY MAILED

SEP 25 2009

OFFICE OF PETITIONS

In re Application of	:	
Desider SCHOBERT-CSONGOR, et *al.*	:	
Application No. 11/581,761	:	DECISION ON PETITION
Filed: October 16, 2006	:	TO MAKE SPECIAL UNDER
Attorney Docket No. **DMX-10**	:	37 CFR 1.102(c)(1)
	:	

This is a decision on the petition under 37 CFR 1.102(c)(1), filed August 31, 2009 to make the above-identified application special based on applicant's age as set forth in M.P.E.P. § 708.02, Section IV.

The petition is **GRANTED**.

A grantable petition to make an application special under 37 CFR 1.102(c)(1) and MPEP § 708.02, Section IV: Applicant's Age must be accompanied by evidence showing that at least one of the applicants is 65 years of age, or more, such as a birth certificate or a statement by applicant. No fee is required

The instant petition includes the certification by registered attorney Donald N. Halgren, registration number 27056, attesting to the age of inventor Desider Schobert-Csongor. Accordingly, the above-identified application has been accorded "special" status.

Inquiries concerning either the examination or status of the application should be directed to the Technology Center at 571-272-1700.

Telephone inquiries concerning this decision should be directed to the undersigned at 571-272-7253.

The application is being forwarded to the Technology Center Art Unit 1797 for action on the merits commensurate with this decision.

Monica A. Graves
Petitions Examiner, Office of Petitions

UNITED STATES PATENT AND TRADEMARK OFFICE

COMMISSIONER FOR PATENTS
UNITED STATES PATENT AND TRADEMARK OFFICE
P.O. BOX 1450
ALEXANDRIA, VA 22313-1450
www.uspto.gov

KNOBBE MARTENS OLSON & BEAR LLP
2040 MAIN STREET
FOURTEENTH FLOOR
IRVINE CA 92614

COPY MAILED

MAY 18 2009

OFFICE OF PETITIONS

Applicant: Rubin, Leonid
Appl. No.: 11/581,769
Filing Date: October 16, 2006
Title: SEMICONDUCTOR STRUCTURE AND PROCESS FOR FORMING OHMIC CONNECTIONS TO A SEMICONDUCTOR STRUCTURE
Attorney Docket No.: FETHE27.005AUS
Pub. No.: 2008/0092944 A1
Pub. Date: April 24, 2008

This is a decision on the request for a corrected patent application publication under 37 CFR 1.221(b), received on June 24, 2008, for the above-identified application.

The request is DISMISSED.

Applicant requests that the application be republished because the patent application publication contains a material error on the front page of the publication, as the assignee data is incorrect.

37 CFR 1.221 (b) is applicable "only when the Office makes a material mistake which is apparent from Office records.... Any request for a corrected publication or revised patent application publication other than provided as provided in paragraph (a) of this section must be filed within two months from the date of the patent application publication." A material mistake must affect the public's ability to appreciate the technical disclosure of the patent application publication, to determine the scope of the patent application publication, or to determine the scope of the provisional rights that an applicant may seek to enforce upon issuance of a patent. [1]

The instant request does not identify a mistake in the publication made by the Office under 37 CFR 1.221(b) with respect to the assignment information. The application was published with the without assignment information, as none was provided on the transmittal letter or an application data sheet.[2]

---

[1] Changes to Implement Eighteen-Month Publication of Patent Applications, 65 FR 57023, 57038 (Sept. 20, 2000), 1239, Off. Gaz. Pat. Office Notices 63, 75 (Oct. 10, 2000) (final rule).

[2] See 37 CFR 1.215, MPEP 1122 and Comment 59, Changes to Implement Eighteen-Month Publication of Patent Applications, 65 FR 57023, 57047 (Sept. 20, 2000), 1239 Off. Gaz. Pat. Office Notices 63, 84 (Oct. 10, 2000) (final rule).

Applicants should not file requests for corrected publication when a publication includes errors in assignment information or missing assignment information. See MPEP 1130. An error in assignment information does not affect the public's ability to appreciate the technical disclosure of the patent application publication, to determine the scope of the patent application publication, or to determine the scope of the provisional rights that an applicant may seek to enforce upon issuance of a patent.

Applicant is reminded of his duty to conduct a reasonable inquiry before filing a paper before the Office. See MPEP 410.

Applicants' request for a corrected patent application publication on June 24, 2008, may constitute a "failure to engage in reasonable efforts to conclude processing or examination of the application." See 1.704(c). This determination will be made on or after a mailing of a Notice of Allowance.

Applicants are advised that a "request for republication of an application previously published" may be filed under 37 CFR 1.221(a). Such a request for republication "must include a copy of the application in compliance with the Office electronic filing system requirements and be accompanied by the publication fee set forth in § 1.18(d) and the processing fee set forth in § 1.17(i)." If the request for republication does not comply with the electronic filing system requirements, the republication will not take place and the publication fee set forth in § 1.18(d) will be refunded. The processing fee will be retained.

A guide for filing a request for a Pre-Grant Publication, such as a request for republication, may be found on the link below:

http://www.uspto.gov/ebc/portal/tutorials.htm

Any request for republication under 37 CFR 1.221(a) must be submitted via the EFS system as a "Pre-Grant Publication".

Inquiries relating to this matter may be directed to Michael Cygan at (571) 272-7700, or to the undersigned at (571) 272-7709.

Mark O. Polutta
Senior Legal Advisor
Office of Patent Legal Administration
Office of the Deputy Commissioner
for Patent Examination Policy

UNITED STATES PATENT AND TRADEMARK OFFICE

UNITED STATES DEPARTMENT OF COMMERCE
United States Patent and Trademark Office
Address: COMMISSIONER FOR PATENTS
P.O. Box 1450
Alexandria, Virginia 22313-1450
www.uspto.gov

WOLF GREENFIELD & SACKS, P.C.
600 ATLANTIC AVENUE
BOSTON, MA 02210-2206

Mail Date: 05/21/2010

Applicant	: Timothy M. Swager	: DECISION ON REQUEST FOR
Patent Number	: 7666684	: RECALCULATION of PATENT
Issue Date	: 02/23/2010	: TERM ADJUSTMENT IN VIEW
Application No	: 11/581,777	: OF WYETH AND NOTICE OF INTENT TO
Filed	: 10/16/2006	: ISSUE CERTIFICATE OF CORRECTION
		:

The Request for Recalculation is **GRANTED** to the extent indicated.

The patent term adjustment has been determined to be **511** days. The USPTO will *sua sponte* issue a certificate of correction reflecting the amount of PTA days determined by the recalculation.

Prior to the issuance of the certificate of correction, the USPTO will afford patentee an opportunity to be heard and request reconsideration. Accordingly, patentee has **one month or thirty (30) days**, whichever is longer, to file a request for reconsideration of this patent term adjustment calculation. See 35 U.S.C. 154(b)(3)(B)(ii) and 37 CFR 1.322(a)(4). No extensions of time will be granted under 37 CFR 1.136.

Patentee should use document code PET.OP if electronically filing a request for reconsideration of this patent term adjustment calculation. The patentee must also include the information required by 37 CFR 1.705(b)(2) and the fee required by 37 CFR 1.18(e). If patentee does not file a timely request for reconsideration of this patent term adjustment calculation including the information required by 37 CFR 1.705(b)(2) and the fee required by 37 CFR 1.18(e), the USPTO will issue a certificate of correction reflecting the PTA determination noted above.

Patentee should be aware that in order to preserve the right to review in the United States District Court for the District of Columbia of the USPTO patent term adjustment determination, patentee must ensure that he or she also take the steps required under 35 U.S.C. 154(b)(4)(A) in a timely manner. Nothing in the request for recalculation should be construed as providing an alternative time frame for commencing a civil action under 35 U.S.C. 154(b)(4)(A).

Any questions concerning this decision should be directed to the Office of Patent Legal Administration at 571-272-7702.

UNITED STATES PATENT AND TRADEMARK OFFICE

UNITED STATES DEPARTMENT OF COMMERCE
United States Patent and Trademark Office
Address: COMMISSIONER FOR PATENTS
P.O. Box 1450
Alexandria, Virginia 22313-1450
www.uspto.gov

NIXON & VANDERHYE, PC
901 NORTH GLEBE ROAD, 11TH FLOOR
ARLINGTON, VA 22203

Mail Date: 04/21/2010

Applicant	: Geoffrey George Campbell	: DECISION ON REQUEST FOR
Patent Number	: 7614459	: RECALCULATION of PATENT
Issue Date	: 11/10/2009	: TERM ADJUSTMENT IN VIEW
Appliction No	: 11/581,782	: OF WYETH AND NOTICE OF INTENT TO
Filed	: 10/17/2006	: ISSUE CERTIFICATE OF CORRECTION
		:

The Request for Recalculation is **GRANTED** to the extent indicated.

The patent term adjustment has been determined to be **0** days. The USPTO will *sua sponte* issue a certificate of correction reflecting the amount of PTA days determined by the recalculation.

Prior to the issuance of the certificate of correction, the USPTO will afford patentee an opportunity to be heard and request reconsideration. Accordingly, patentee has **one month or thirty (30) days**, whichever is longer, to file a request for reconsideration of this patent term adjustment calculation. See 35 U.S.C. 154(b)(3)(B)(ii) and 37 CFR 1.322(a)(4). No extensions of time will be granted under 37 CFR 1.136.

Patentee should use document code PET.OP if electronically filing a request for reconsideration of this patent term adjustment calculation. The patentee must also include the information required by 37 CFR 1.705(b)(2) and the fee required by 37 CFR 1.18(e). If patentee does not file a timely request for reconsideration of this patent term adjustment calculation including the information required by 37 CFR 1.705(b)(2) and the fee required by 37 CFR 1.18(e), the USPTO will issue a certificate of correction reflecting the PTA determination noted above.

Patentee should be aware that in order to preserve the right to review in the United States District Court for the District of Columbia of the USPTO patent term adjustment determination, patentee must ensure that he or she also take the steps required under 35 U.S.C. 154(b)(4)(A) in a timely manner. Nothing in the request for recalculation should be construed as providing an alternative time frame for commencing a civil action under 35 U.S.C. 154(b)(4)(A).

Any questions concerning this decision should be directed to the Office of Patent Legal Administration at 571-272-7702.

UNITED STATES PATENT AND TRADEMARK OFFICE

Commissioner for Patents
United States Patent and Trademark Office
P.O. Box 1450
Alexandria, VA 22313-1450
www.uspto.gov

DONALD E. SCRUGGS
4464 WALNUT AVENUE
CHINO, CA 91710

COPY MAILED

OCT 15 2007

OFFICE OF PETITIONS

In re Application of	:	
Donald E. Scruggs	:	
Application No. 11/581,816	:	DECISION ON PETITION
Filed: October 17, 2006	:	TO MAKE SPECIAL UNDER
Attorney Docket No.	:	37 CFR 1.102(c)(1)
	:	

This is a decision on the petition under 37 CFR 1.102(c)(1), filed October 17, 2006, to make the above-identified application special based on applicant's age as set forth in M.P.E.P. § 708.02, Section IV.

The petition is **GRANTED**.

A grantable petition to make an application special under 37 CFR 1.102(c)(1) and MPEP § 708.02, Section IV: Applicant's Age must be accompanied by evidence showing that at least one of the applicants is 65 years of age, or more, such as a birth certificate or a statement by applicant. No fee is required

The instant petition includes a photocopy of applicant's birth certificate. Accordingly, the above-identified application has been accorded "special" status.

Telephone inquiries concerning this decision should be directed to Kimberly Inabinet at 571-272-4618.

All other inquiries concerning either the examination or status of the application should be directed to the Technology Center.

The application is being forwarded to the Technology Center Art Unit 3616 for action on the merits commensurate with this decision.

Kimberly Inabinet

Kimberly Inabinet
Petitions Examiner
Office of Petitions

UNITED STATES PATENT AND TRADEMARK OFFICE

UNITED STATES DEPARTMENT OF COMMERCE
United States Patent and Trademark Office
Address: COMMISSIONER FOR PATENTS
P.O. Box 1450
Alexandria, Virginia 22313-1450
www.uspto.gov

APPLICATION NO.	FILING DATE	FIRST NAMED INVENTOR	ATTORNEY DOCKET NO.	CONFIRMATION NO.
11/581,838	10/17/2006	Kyung-Joo Suh	1235-243	9076

7590 11/26/2008
THE FARRELL LAW FIRM, P.C.
333 EARLE OVINGTON BOULEVARD
SUITE 701
UNIONDALE, NY 11553

EXAMINER
FAHNERT, MARISOL

ART UNIT	PAPER NUMBER
4172	

MAIL DATE	DELIVERY MODE
11/26/2008	PAPER

DECISION GRANTING PETITION UNDER 37 CFR 1.138(d)

The declaration of express abandonment is recognized

This is in response to the petition under 37 CFR 1.138(d), requesting for a refund of any previously paid search fee and excess claims fee in the above-identified application.

The petition is granted.

The express abandonment is recognized. Any previously paid search fee and excess claims fee are hereby refunded.

Telephone inquiries should be directed to the Office of Data Management at (571) 272-4200.

Tom Farmer

Patent Publication Branch
Office of Data Management

Refund Ref:
11/28/2008 NFARMER 0000165294

CHECK Refund Total: $1500.00

Adjustment date: 11/28/2008 NFARMER
10/18/2006 YPOLITE1 00000082 11581838
02 FC:1111 -500.00 OP
04 FC:1201 -1000.00 OP

FORM PET651G (Rev. 08/07)

UNITED STATES PATENT AND TRADEMARK OFFICE

Commissioner for Patents
United States Patent and Trademark Office
P.O. Box 1450
Alexandria, VA 22313-1450
www.uspto.gov

HEWLETT PACKARD COMPANY
P O BOX 272400, 3404 E. HARMONY
ROAD
INTELLECTUAL PROPERTY
ADMINISTRATION
FORT COLLINS CO 80527-2400

COPY MAILED

JUN 23 2009

OFFICE OF PETITIONS

In re Application of :
Raphael Gay :
Application No. 11/581, 854 : DECISION GRANTING PETITION
Filed: October 17, 2006 :
Attorney Docket No. 200602591-1 :
For: Circuit Board Assembly :

This is a decision on the "PETITION TO THE DIRECTOR UNDER 37 CFR 1.181(3)" filed February 18, 2009, requesting to correct a mailroom scanning error.

Application papers in the above-identified application were filed on October 17, 2006. In response to the December 18, 2008 Office action, petitioner filed and amendment and the instant petition.

Petitioner contends that the incorrect application papers have been used to accord the filing date. Petitioner states upon filing petitioner filed the following items: Patent Application Transmittal & Copy (2 pages), New Patent Application (title page, pages 1-17 including claims 1-15 abstract, Five (5) sheets of formal drawings (figs. 1-5), executed declaration (1 page), Executed assignment(1 page) and Recordation (1 page), and 2 return postcard receipts.

On petition, petitioner has provided a copy of a stamped postcard receipt and a copy of the application papers petitioner contends were originally submitted.

A review of the record shows that the incorrect specification, claims, abstract and drawings are contained in application file

no. 11/581,854. It appears that the specification, claims abstract and drawings, which contained attorney docket no. 200600451-1(now application no. 11/581,942), were used to grant a filing date in application no. 11/581,854.

Further a review of the postcard receipt establishes that the Office was in receipt of *inter alia* specification, claims, abstract containing attorney docket number 200602591-1 and formal drawings (Figs 1-4) 5 sheets on October 17, 2006.

Based on the totality of evidence, the petition is **GRANTED TO THE EXTENT INDICATED**.

The documents containing attorney docket number 200600451-1 and title Hybrid Database Query Caching (17 pages of specification, 4 pages of drawings, 4 pages of claims and 1 page of abstract) will be closed and thus not viewable in the above-identified application.

The Office will use a copy of the 17 pages of specification (including 15 claims, 1 page of abstract) and 5 sheets of drawings (figures 1-4) submitted on February 18, 2009 for processing purposes.

Pursuant to this decision, the application will be referred to Office of Patent Application Processing for:

- **Maintenance of the filing date of October 17, 2006;**
- **for indication in Office records as appropriate , that 17 pages of specification (including 15 claims, and 1 sheet of abstract were present on filing;**
- **for indication in Office records, as appropriate, that "5" sheets of drawings (including figures 1-4 were present on filing ;**
- **correction of the title and attorney docket no.** and
- **for issuance of a corrected filing receipt.**

Telephone inquiries specific to this matter should be directed to the undersigned at (571) 272 -3215.

Charlema R. Grant

Charlema R. Grant
Petitions Attorney
Office of Petitions

UNITED STATES PATENT AND TRADEMARK OFFICE

Commissioner for Patents
United States Patent and Trademark Office
P.O. Box 1450
Alexandria, VA 22313-1450
www.uspto.gov

ARMSTRONG WORLD INDUSTRIES, INC.
LEGAL DEPARTMENT
P. O. BOX 3001
LANCASTER PA 17604-3001

MAILED

JUN 23 2010

OFFICE OF PETITIONS

In re Application of	:	
Brian T. Patterson, et al.	:	
Application No. 11/581,855	:	DECISION ON PETITION
Filed: October 17, 2006	:	
Attorney Docket No. 0615	:	

This is a decision on the petition under the unintentional provisions of 37 CFR 1.137(b), filed May 14, 2010, to revive the above-identified application.

The petition is **GRANTED**.

This application became abandoned for failure to timely pay the issue and publication fees on or before May 5, 2010, as required by the Notice of Allowance and Fee(s) Due, mailed February 5, 2010. Accordingly, the date of abandonment of this application is May 6, 2010.

The petition satisfies the requirements of 37 CFR 1.137(b) in that petitioner has supplied (1) the reply in the form of payment of the issue fee of $1,510 and the publication fee of $300, (2) the petition fee of $1,620; and (3) a proper statement of unintentional delay.

Telephone inquiries concerning this decision should be directed to Terri Johnson at (571) 272-2991.

This application is being referred to the Office of Data Management for processing into a patent.

Terri Johnson

Terri Johnson
Petitions Examiner
Office of Petitions

UNITED STATES PATENT AND TRADEMARK OFFICE

Commissioner for Patents
United States Patent and Trademark Office
P.O. Box 1450
Alexandria, VA 22313-1450
www.uspto.gov

Heller Ehrman LLP
4350 La Jolla Village Drive, 7th Floor
San Diego, CA 92122

COPY MAILED

OCT 23 2008

OFFICE OF PETITIONS

In re Application of	:	
Brigitte Devaux, et al.	:	
Application No. 11/581,865	:	DECISION ON PETITION
Filed: October 16, 2006	:	TO WITHDRAW
Attorney Docket No. 39766-0040 C1	:	FROM RECORD
	:	

This is a decision on the Request to Withdraw as attorney or agent of record under 37 C.F.R. § 1.36(b), filed September 23, 2008.

The request is **NOT APPROVED** because it is moot.

A review of the file record indicates that the power of attorney to Heller Ehrman LLP has been revoked by the assignee of the patent application October 20, 2008. Accordingly, the request to withdraw under 37 C.F.R. § 1.36(b) is moot.

All future communications from the Office will continue to be directed to the below-listed address until otherwise notified by applicant.

Telephone inquires concerning this decision should be directed to Terri Williams at 571-272-2991.

Terri Williams
Petitions Examiner
Office of Petitions

cc: **Goodwin Procter LLP**
Attn: Patent Administrator
135 Commonwealth Drive
Menlo Park, CA 94025-1105

UNITED STATES PATENT AND TRADEMARK OFFICE

Commissioner for Patents
United States Patent and Trademark Office
P.O. Box 1450
Alexandria, VA 22313-1450
www.uspto.gov

GOODWIN PROCTER LLP
ATTN: PATENT ADMINISTRATOR
135 COMMONWEALTH DRIVE
MENLO PARK CA 94025-1105

COPY MAILED

OCT 0 7 2009

OFFICE OF PETITIONS

In re Application of	:	
Devaux et al.	:	
Application No. 11/581,865	:	ON PETITION
Filed: October 16, 2006	:	
Attorney Docket No. 39766-0040 C1	:	

This is a notice regarding your request for acceptance of a fee deficiency submission under 37 CFR 1.28. On September 1, 1998, the Court of Appeals for the Federal Circuit held that 37 CFR 1.28(c) is the sole provision governing the time for correction of the erroneous payment of the issue fee as a small entity. **See DH Technology v. Synergystex International, Inc. 154 F.3d 1333, 47 USPQ2d 1865 (Fed. Cir. Sept. 1, 1998).**

The Office no longer investigates or rejects original or reissue applications under 37 CFR 1.56. **1098 Off. Gaz. Pat. Office 502 (January 3, 1989).** Therefore, nothing in this Notice is intended to imply that an investigation was done.

Your fee deficiency submission under 37 CFR 1.28 is hereby **ACCEPTED**.

However, an itemization of the total deficiency payment is required by 37 CFR 1.28(c)(2)(ii). The itemization must include the following information:

(A) Each particular type of fee that was erroneously paid as a small entity, (*e.g.*, basic statutory filing fee, two-month extension of time fee) along with the current fee amount for a non-small entity;

(B) The small entity fee actually paid, and when. This will permit the Office to differentiate, for example, between two one-month extension of time fees erroneously paid as a small entity but on different dates;

(C) The deficiency owed amount (for each fee erroneously paid); and

(D) The total deficiency payment owed, which is the sum or total of the individual deficiency owed amounts set forth in paragraph (c)(2)(ii)(C) of this section.

If the requirements of 37 CFR 1.28(c)(2) are not complied with (i.e. not itemizing the total deficiency ,etc.), such failure will either: be treated as an authorization for the Office to process the deficiency payment and charge the processing fee set forth in § 1.17(i), or result in a requirement for compliance within a one-month non-extendable time period under § 1.136(a) to avoid the return of the fee deficiency paper, at the option of the Office.

Petitioner has not provided an itemization of the total deficiency payment of $3,455.00 and therefore petitioner's deposit account has been charged the $130.00 processing fee as set forth in 37 CFR 1.17(i).

Additionally, it is not apparent whether the person signing the instant petition was ever given a power of attorney or authorization of agent to prosecute this patent. In accordance with 37 CFR 1.34(a), the signature appearing on the petition shall constitute a representation to the United States Patent and Trademark Office that he/she is authorized to represent the particular party in whose behalf he/she acts.

Telephone inquiries concerning this decision should be directed to Joan Olszewski at (571) 272-7751.

/Liana Walsh/
Liana Walsh
Petitions Examiner
Office of Petitions

UNITED STATES PATENT AND TRADEMARK OFFICE

MAY 30 2008

Commissioner for Patents
United States Patent and Trademark Office
P.O. Box 1450
Alexandria, VA 22313-1450
www.uspto.gov

JONDLE & ASSOCIATES P.C.
858 HAPPY CANYON ROAD SUITE 230
CASTLE ROCK CO 80108

In re Application of:	:
James Dolphin Thomas	:
Serial No.: 11/581,868	: PETITION DECISION
Filed: October 17, 2006	:
Attorney Docket No.: 1494-002	

This is in response to the petition under 37 CFR § 1.59(b), filed May 20, 2008, to expunge information from the above identified application. This application has not been allowed.

Petitioner requests that the Reply to Request for Information Under 37 CFR 1.105, and attachment thereto, submitted to the Patent Office on May 20, 2008, be expunged from the record. Petitioner states either: (A) that the information contains trade secret material, proprietary material and/or material that is subject to a protective order which has not been made public; or (B) that the information submitted was unintentionally submitted and the failure to obtain its return would cause irreparable harm to the party who submitted the information or to the party in interest on whose behalf the information was submitted, and the information has not otherwise been made public. The petition fee set forth in 37 CFR § 1.17(g) has been paid.

This is an examined application which is currently under non-final rejection. As such the information provided has been reviewed, in part, but proceedings in the application have not been terminated. As stated in M.P.E.P. 724, upon allowance or other action closing prosecution in an application, petition may be made for return of Proprietary information. The information cannot be expunged at this time.

The petition is **DISMISSED**. Petitioner may resubmit the petition subsequent to a Notice of Allowability or *ex parte Quayle* action being mailed in the application. No additional petition fee will be required at that time.

Should there be any questions about this decision please contact Marianne C. Seidel by letter addressed to Director, TC 1600, at the address listed above, or by telephone at 571-272-0584 or by facsimile sent to the general Office facsimile number, 703-872-9306.

Marianne C. Seidel
Quality Assurance Specialist/Program Manager
Technology Center 1600

UNITED STATES PATENT AND TRADEMARK OFFICE

SEP 23 2008

Commissioner for Patents
United States Patent and Trademark Office
P.O. Box 1450
Alexandria, VA 22313-1450
www.uspto.gov

SEP 2 2 2008

JONDLE & ASSOCIATES P.C.
858 HAPPY CANYON ROAD SUITE 230
CASTLE ROCK CO 80108

In re Application of :	:
James D. Thomas	: PETITION DECISION
Serial No.: 11/581,868	:
Filed: October 17, 2006	:
Attorney Docket No.: **1494-002**	

This is in response to the renewed petition under 37 CFR § 1.59(b), filed September 19, 2008, to expunge information from the above identified application. This application has been allowed.

Petitioner requests that the Reply to Request for Information Under 37 CFR 1.105, and all attachments thereto, submitted to the Patent Office on May 20, 2008 be expunged from the record. Petitioner states either: (A) that the information contains trade secret material, proprietary material and/or material that is subject to a protective order which has not been made public; or (B) that the information submitted was unintentionally submitted and the failure to obtain its return would cause irreparable harm to the party who submitted the information or to the party in interest on whose behalf the information was submitted, and the information has not otherwise been made public. The petition fee set forth in 37 CFR § 1.17(g) has been paid.

The reasons set forth in this petition establishes to the satisfaction of the Director that expungement of the information is appropriate. The file entries for those documents have been closed and as such the documents are no longer publicly available, which is the IFW equivalent to removal of a paper document from a paper file wrapper. Also, as stated in M.P.E.P. 724, upon allowance or other action closing prosecution in an application, petition may be made for return of Proprietary information. As this application has been allowed, the information is being returned to applicant.

Therefore, petitioner's petition is GRANTED.

Should there be any questions about this decision please contact Marianne C. Seidel by letter addressed to Director, TC 1600, at the address listed above, or by telephone at 571-272-0584 or by facsimile sent to the general Office facsimile number, 703-872-9306.

Marianne C. Seidel
Quality Assurance Specialist/Program Manager
Technology Center 1600

UNITED STATES PATENT AND TRADEMARK OFFICE

UNITED STATES DEPARTMENT OF COMMERCE
United States Patent and Trademark Office
Address: COMMISSIONER FOR PATENTS
P.O. Box 1450
Alexandria, Virginia 22313-1450
www.uspto.gov

THE WEBB LAW FIRM, P.C.
700 KOPPERS BUILDING
436 SEVENTH AVENUE
PITTSBURGH, PA 15219

Mail Date: 04/28/2010

Applicant	: Dan Winter	: DECISION ON REQUEST FOR
Patent Number	: 7663503	: RECALCULATION of PATENT
Issue Date	: 02/16/2010	: TERM ADJUSTMENT IN VIEW
Application No	: 11/581,877	: OF WYETH AND NOTICE OF INTENT TO
Filed	: 10/17/2006	: ISSUE CERTIFICATE OF CORRECTION
		:

The Request for Recalculation is **GRANTED** to the extent indicated.

The patent term adjustment has been determined to be **549** days. The USPTO will *sua sponte* issue a certificate of correction reflecting the amount of PTA days determined by the recalculation.

Prior to the issuance of the certificate of correction, the USPTO will afford patentee an opportunity to be heard and request reconsideration. Accordingly, patentee has **one month or thirty (30) days**, whichever is longer, to file a request for reconsideration of this patent term adjustment calculation. See 35 U.S.C. 154(b)(3)(B)(ii) and 37 CFR 1.322(a)(4). No extensions of time will be granted under 37 CFR 1.136.

Patentee should use document code PET.OP if electronically filing a request for reconsideration of this patent term adjustment calculation. The patentee must also include the information required by 37 CFR 1.705(b)(2) and the fee required by 37 CFR 1.18(e). If patentee does not file a timely request for reconsideration of this patent term adjustment calculation including the information required by 37 CFR 1.705(b)(2) and the fee required by 37 CFR 1.18(e), the USPTO will issue a certificate of correction reflecting the PTA determination noted above.

Patentee should be aware that in order to preserve the right to review in the United States District Court for the District of Columbia of the USPTO patent term adjustment determination, patentee must ensure that he or she also take the steps required under 35 U.S.C. 154(b)(4)(A) in a timely manner. Nothing in the request for recalculation should be construed as providing an alternative time frame for commencing a civil action under 35 U.S.C. 154(b)(4)(A).

Any questions concerning this decision should be directed to the Office of Patent Legal Administration at 571-272-7702.

UNITED STATES PATENT AND TRADEMARK OFFICE

Commissioner for Patents
United States Patent and Trademark Office
P.O. Box 1450
Alexandria, VA 22313-1450
www.uspto.gov

JJGJR.:12-07

Paper No: __

COPY MAILED

JAN 04 2008

OFFICE OF PETITIONS

COOPER & DUNHAM, LLP
1185 AVENUE OF THE AMERICAS
NEW YORK NY 10036

In re Application of
Olson, et al. :
Application No. 11/581,944 : DECISION ON PETITION
Filed: 16 October, 2006 :
Attorney Docket No. 57906-DA/ JPW/ AG :

This is a decision on the petition filed on 12 January, 2007, and considered under 37 C.F.R. §1.53.

The Office regrets the delay in addressing the matter—the petition was presented to the attorneys in the Office of Petitions only at this writing.

For the reasons set forth below, the petition under 37 C.F.R. §1.53 is **DISMISSED**.

BACKGROUND

The instant application was deposited on 16 October, 2006

On 7 November, 2006, the Office of Initial Patent Examination (OIPE) mailed a Notice of Omitted Items—to wit: "page 15" of the specification (description)—thus, the application had been accorded a filing date without that page.

OIPE indicated that Petitioner might:

- contend via petition that page 15 of the specification (description) had been submitted on deposit and so evidence that condition with the proper supporting documentation (i.e., a date stamped receipt card (see: MPEP §503)) along with a copy of the specification; or

- submit page 15 of the specification (description) and accept the date of submission as the filing date.

OIPE set a two- (2-) month period for reply.

On 12 January, 2007, Petitioner submitted the instant petition, including therewith, *inter alia*, what is averred to be a true copy of page 15 of the specification (description) and an averment of deposit of that application with the page in question, however, while Petitioner has submitted a date-stamped receipt card (see: MPEP §503) indicating that 77 pages of specification (description) were submitted, there also is an indication in the record that one of the pages submitted may have been blank. The Office has acknowledged receipt of 77 pages of specification, but the receipt card does not state that the pages are pages numbered, successively, pages 1 – 77. Thus, at this writing page the record lacks clarity as to the papers averred to have been submitted and the papers received by the Office.

ANALYSIS

A search of the official file reveals that:

- on 16 October, 2006, Petitioner deposited the instant application;

- the Office record reflects that page 15 of the specification was missing upon deposit.

Because Petitioner provides no receipt card adequately reflecting the contents of the application, **it is concluded as of this writing that page 15 of the specification, was not received by the Office on deposit of the application and thus is not due a 16 October 2006, filing date**. Petitioner may accept the application as deposited or request a the later filing date (that of the submission of the pages in question).

Accordingly, page 15 of the specification is not entitled to a filing date of 16 October, 2006.

The Notice mailed on 7 November, 2006, was properly sent and will not be disturbed.

CONCLUSION

The petition is **dismissed**; the petition fee will not be refunded because there is no indication as

of this writing of error on the part of the Office.

This application is released to OIPE for further processing with a filing date of 16 October, 2006, without page 15 of the specification; and further with direction to OIPE to ensure that Office records are consistent with this decision and provide to Petitioner, if necessary, an updated filing receipt also consistent with this decision.

While telephone inquiries regarding this decision may be directed to the undersigned at (571) 272-3214, it is noted that all practice before the Office is in writing (see: 37 C.F.R. §1.2[1]) and the proper authority for action on any matter in this regard are the statutes (35 U.S.C.), regulations (37 C.F.R.) and the commentary on policy (MPEP). Therefore, no telephone discussion may be controlling or considered authority for Petitioner's/Caller's action(s).

John J. Gillon, Jr.
Senior Attorney
Office of Petitions

[1] The regulations at 37 C.F.R. §1.2 provide:

§1.2 Business to be transacted in writing.

All business with the Patent and Trademark Office should be transacted in writing.The personal attendance of applicants or their attorneys or agents at the Patent and Trademark Office is unnecessary. The action of the Patent and Trademark Office will be based exclusively on the written record in the Office. No attention will be paid to any alleged oral promise, stipulation,or understanding in relation to which there is disagreement or doubt.

UNITED STATES PATENT AND TRADEMARK OFFICE

Commissioner for Patents
United States Patent and Trademark Office
P.O. Box 1450
Alexandria, VA 22313-1450
www.uspto.gov

COPY MAILED
NOV 0 9 2006
OFFICE OF PETITIONS

BANNER DEVELOPMENT, INC.
19 CHENANGO STREET, SUITE 904
BINGHAMTON NY 13901

In re Application of	:	
Bill Gallentine	:	
Application No. 11/581,982	:	DECISION ON PETITION
Filed: October 17, 2006	:	TO MAKE SPECIAL UNDER
Attorney Docket No. GAL-102	:	37 CFR 1.102(c)(1)
	:	

This is a decision on the petition under 37 CFR 1.102(c)(1), filed October 17, 2006, to make the above-identified application special based on applicant's age as set forth in M.P.E.P. § 708.02, Section IV.

The petition is **GRANTED**.

A grantable petition to make an application special under 37 CFR 1.102(c)(1) and MPEP § 708.02, Section IV: Applicant's Age, must be accompanied by evidence showing that at least one of the applicants is 65 years of age, or more, such as a birth certificate or a statement by applicant. No fee is required.

The instant petition includes a copy of the applicant's drivers license proving that he is at least 65 years of age or older. Accordingly, the above-identified application has been accorded "special" status.

Telephone inquiries concerning this decision should be directed to Terri Williams at 571-272-2991.

All other inquiries concerning either the examination or status of the application should be directed to the Technology Center.

The application is being forwarded to the Technology Center Art Unit 2829 for action on the merits commensurate with this decision.

Terri Williams

Terri Williams
Petitions Examiner
Office of Petitions

UNITED STATES PATENT AND TRADEMARK OFFICE

Commissioner for Patents
United States Patent and Trademark Office
P.O. Box 1450
Alexandria, VA 22313-1450
www.uspto.gov

Barnes & Thornburg, LLP
600 One Summit Square
Fort Wayne, IN 46802

MAILED

AUG 12 2009

OFFICE OF PETITIONS

In re Application of :
Garry E. Balthes :
Application No. 11/581,984 : ON PETITION
Filed: October 17, 2006 :
Attorney Docket No. 29595/83033 :

This is a decision on the petition under the unintentional provisions of 37 CFR 1.137(b), filed June 15, 2009, to revive the above-identified application.

The petition is **GRANTED**.

The application became abandoned for failure to timely file a proper reply within the meaning of 37 CFR 1.113 to the final Office action of November 28, 2008. The proposed reply required for consideration of a petition to revive must be a Notice of Appeal (and appeal fee required by 37 CFR 41.20(b)(2), an amendment that *prima facie* places the application in condition for allowance, a Request for Continued Examination and submission (37 CFR 1.114), or the filing of a continuing application under 37 CFR 1.53(b). See MPEP 711.03(c)(II)(A)(2). A three month extension of time was obtained. Accordingly, the date of abandonment of this application is May 29, 2009. A reply was received on May 28, 2009, but was not proper since the reply did put the application in condition for allowance.

The petition satisfies the requirements of 37 CFR 1.137(b) in that petitioner has supplied (1) the reply in the form of a RCE (Request for Continued Examination), with the required fee of $405, (2) the petition fee of $810, and (3) a proper statement of unintentional delay. Accordingly, the RCE is accepted as being unintentionally delayed.

Telephone inquiries concerning this decision should be directed to Kimberly Inabinet at (571) 272-4618.

This application is being referred to Technology Center AU 1794 for processing of the RCE and any action that is required by the Examiner in the normal course of business.

Carl Friedman
Petitions Examiner
Office of Petitions

UNITED STATES PATENT AND TRADEMARK OFFICE

UNITED STATES DEPARTMENT OF COMMERCE
United States Patent and Trademark Office
Address: COMMISSIONER FOR PATENTS
P.O. Box 1450
Alexandria, Virginia 22313-1450
www.uspto.gov

WILMERHALE/BOSTON
60 STATE STREET
BOSTON, MA 02109

Mail Date: 06/08/2010

Applicant	: Roy G. Gordon	: DECISION ON REQUEST FOR
Patent Number	: 7638645	: RECALCULATION of PATENT
Issue Date	: 12/29/2009	: TERM ADJUSTMENT IN VIEW
Application No	: 11/581,987	: OF WYETH AND NOTICE OF INTENT TO
Filed	: 10/17/2006	: ISSUE CERTIFICATE OF CORRECTION
		:

The Request for Recalculation is **GRANTED** to the extent indicated.

The patent term adjustment has been determined to be **629** days. The USPTO will *sua sponte* issue a certificate of correction reflecting the amount of PTA days determined by the recalculation.

Prior to the issuance of the certificate of correction, the USPTO will afford patentee an opportunity to be heard and request reconsideration. Accordingly, patentee has **one month or thirty (30) days**, whichever is longer, to file a request for reconsideration of this patent term adjustment calculation. See 35 U.S.C. 154(b)(3)(B)(ii) and 37 CFR 1.322(a)(4). No extensions of time will be granted under 37 CFR 1.136.

Patentee should use document code PET.OP if electronically filing a request for reconsideration of this patent term adjustment calculation. The patentee must also include the information required by 37 CFR 1.705(b)(2) and the fee required by 37 CFR 1.18(e). If patentee does not file a timely request for reconsideration of this patent term adjustment calculation including the information required by 37 CFR 1.705(b)(2) and the fee required by 37 CFR 1.18(e), the USPTO will issue a certificate of correction reflecting the PTA determination noted above.

Patentee should be aware that in order to preserve the right to review in the United States District Court for the District of Columbia of the USPTO patent term adjustment determination, patentee must ensure that he or she also take the steps required under 35 U.S.C. 154(b)(4)(A) in a timely manner. Nothing in the request for recalculation should be construed as providing an alternative time frame for commencing a civil action under 35 U.S.C. 154(b)(4)(A).

Any questions concerning this decision should be directed to the Office of Patent Legal Administration at 571-272-7702.

UNITED STATES PATENT AND TRADEMARK OFFICE

Commissioner for Patents
United States Patent and Trademark Office
P.O. Box 1450
Alexandria, VA 22313-1450
www.uspto.gov

TROUTMAN SANDERS LLP
THE CHRYSLER BUILDING
405 LEXINGTON AVENUE
NEW YORK, NY 10174

COPY MAILED

DEC 14 2009

OFFICE OF PETITIONS

In re Application of	:	
Nezih Cereb et al	:	
Application No. 11/582,008	:	DECISION ON PETITION
Filed: October 16, 2006	:	TO WITHDRAW
Attorney Docket No. 602302-003	:	FROM RECORD
	:	

This is a decision on the Request to Withdraw as attorney or agent under 37 C.F.R. § 1.36(b) or 37 C.F.R. § 10.40 filed October 9, 2009.

The request is **APPROVED**.

A review of the file record indicates that Barry J. Schindler: (1) does not have power of attorney in this patent application; and (2) has been employed or otherwise engaged in the proceedings in this patent application. In view of the present decision, Barry J. Schindler has been withdrawn from the present application and may not prepare or submit papers under 37 C.F.R. § 1.34, or correspond in any manner in this application unless appointed in an acceptable power of attorney under 37 C.F.R. § 1.32(b).

Telephone inquires concerning this decision should be directed to Irvin Dingle at 571-272-3210.

Irvin Dingle
Petitions Examiner
Office of Petitions

cc: Barry J. Schindler
Greenberg Traurig, LLP
200 Park Avenue, 34th Floor
New York, NY 10166

UNITED STATES PATENT AND TRADEMARK OFFICE

Commissioner for Patents
United States Patent and Trademark Office
P.O. Box 1450
Alexandria, VA 22313-1450
www.uspto.gov

PAUL V. KELLER, LLC
4585 LIBERTY RD.
SOUTH EUCLID OH 44121

JAN 03 2007

In re Application of: McCarthy, Jr. Serial No.: 11/582,039 Filed: October 17, 2006 Title: LNT_SCR Packaging	:	DECISION ON PETITION TO MAKE SPECIAL FOR NEW APPLICATION UNDER 37 C.F.R. § 1.102 & M.P.E.P. § 708.02

This is a decision on the petition filed on October 17, 2006 to make the above-identified application special for accelerated examination procedure under 37 C.F.R. § 1.102(d).

The petition to make the application special is **DENIED**.

REGULATION AND PRACTICE

To be eligible for accelerated examination under 37 C.F.R. § 1.102(d) and pursuant to the "Change to Practice for Petitions in Patent Applications to Make Special and for Accelerated Examination" published in the Federal Register on June 26, 2006 (71 Fed. Reg. 36323), the following conditions must be satisfied:

1. The application must be a non-reissue utility or design application filed under 37 CFR 1.111(a);
2. The application, the petition and the required fees must be filed electronically using the USPTO's electronic filing system (EFS), or EFS-web; if not filed electronically, a statement asserting that EFS and EFS-web were not available during the normal business hours;
3. The application, at the time of filing, must be complete under 37 CFR 1.51 and in condition for examination;
4. The application must contain three or fewer independent claims and twenty or fewer total claims and the claims must be directed to a single invention.
5. The petition must be filed with the application.

The application as filed is not eligible for the accelerated examination under 37 C.F.R. § 1.102(d) because the application was not filed electronically using the USPTO's electronic filing system (EFS), or EFS-web; nor does the application, if not filed electronically, contain a statement asserting that EFS and EFS-web were not available during the normal business hours. As noted in the policy statement referenced above, any petition to make special filed on or after the effective date must meet the new requirements set forth in the 71 Fed. Reg. 36323 notice.

The effective date of the change in practice was August 25, 2006. Thus the instant petition must be reviewed under the revised practice and the instant application is ineligible.

The petition appears on its face to have been filed without recognition of the August 25, 2006 policy change to the petition to make special program. The changes to the program are substantial. A copy of Federal Register on June 26, 2006 (71 Fed. Reg. 36323) is being attached to the mailed decision for petitioner's review. Further guidance may be found at www.USPTO.gov under the accelerated examination link.

For the above-stated reasons, the petition is **DENIED**. The application will therefore be taken up by the examiner for action in its regular turn.

Any inquiry regarding this decision should be directed to J. Harrison, TC 3700 Special Program Examiner, at (571) 272-4449.

J. Harrison
Special Program Examiner
Technology Center 3700

UNITED STATES PATENT AND TRADEMARK OFFICE

Commissioner for Patents
United States Patent and Trademark Office
P.O. Box 1450
Alexandria, VA 22313-1450
www.uspto.gov
DIW Apr-08

YIGAL ADIR
10584 SANTA MONICA BLVD. #102
LOS ANGELES CA 90025

COPY MAILED

APR 17 2008

OFFICE OF PETITIONS

In re Application of	:	
Yigal Adir	:	
Application Number: 11/582046	:	ON PETITION
Filing Date: 05/08/2007	:	
For: "THE POWER JET CONTROLLER"	:	
BALL TAYPE	:	

This is a decision in reference to the petition filed on August 14, 2007, which is treated as a petition filed under 37 CFR 1.53, requesting that the above-identified application be accorded a filing date of October 16, 2006.[1]

The petition is **DISMISSED**.

On October 16, 2006, the application papers were deposited. The papers included, *inter alia*, a Fee Transmittal form, one (1) page of specification, six (6) pages of drawings, also containing text, and an executed declaration.

On November 21, 2006, the Office of Patent Application Processing mailed a Notice of Incomplete Nonprovisional Application, stating the application had not been accorded a filing date because the specification does not include at least one claim. The Notice stated that the filing date would be the date of receipt of a claim in compliance with 35 U.S.C. § 112. On March 1, 2007, a Change of Correspondence Address was received. On March 8, 2007, the Notice of Incomplete Nonprovisinal Application was remailed.

In response, on May 8, 2007, *inter alia*, four (4) pages containing 13 claims were filed. On May 11, 2007, *inter alia*, a petition fee of $400.00 was filed received.

[1] See MPEP 506.

Copied from 29236395 on 04/24/2008

Accordingly, on June 20, 2007, the Office of Patent Application Processing mailed a Notice to File Corrected Application Papers, stating that the application had been accorded a filing date of May 8, 2007, but that replacement drawings in compliance with 37 CFR 1.84 and 1.121(d), a replacement abstract in compliance with 37 CFR 1.72(b) and 37 CFR 1.121, and additional claim fees were required. A two (2) month period for reply was set.

On August 14, 2007, the present petition was filed, accompanied by the replacement drawings and abstract.

Petitioner asserts that the application should be accorded a filing date of October 16, 2006.

Petitioner avers, in pertinent part:

> For example I wrote a [claim] in page 1 of my original application but I did not [write] I claim, because I did not know know at that time that that [was] the way you like it.

The Office notes:

> 35 U.S.C. 111(a)(2) requires that an application for patent include, *inter alia,* "a specification as prescribed by section 112 of this title," and 35 U.S.C. 11 1(a)(4) provides that the "filing date of an application shall be the date on which the specification and any required drawing are received in the Patent and Trademark Office." 35 U.S.C. 112, first paragraph, provides, in part, that "[t]he specification shall contain a written description of the invention," and 35 U.S.C. 112, second paragraph, provides that "[t]he specification shall conclude with one or more claims particularly pointing out and distinctly claiming the subject matter which the applicant regards as his invention." Also, the Court of Appeals for the Federal Circuit stated in *Litton Systems, Inc. v. Whirlpool Corp.:*
>
>> Both statute, 35 U.S.C. 111 [(a)], and federal regulations, 37 CFR 1.51 [(b)], make clear the requirement that an application for a patent must include.., a specification and claims .... The omission of any one of these component parts makes a patent application incomplete and thus not entitled to a filing date. *728 F.2d 1423, 1437, 221*

Copied from 29236395 on 04/24/2008

> *USPQ 97, 105 (Fed. Cir. 1984) (citing Gearon v. United States, 121 F. Supp 652, 654, 101 USPQ 460, 461 (Ct. Cl. 1954), cert. denied, 348 U.S. 942, 104 USPQ 409 (1955))(emphasis in the original).*

> Therefore, in an application filed under 35 U.S.C. 111(a), a claim is a statutory requirement for according a filing date to the application. 35 U.S.C. 162 and 35 U.S.C. 171 make 35 U.S.C. 112 applicable to plant and design applications, and 35 U.S.C. 162 specifically requires the specification in a plant patent application to contain a claim. 35 U.S.C. 111(b)(2), however, provides that "[a] claim, as required by the second through fifth paragraphs of section 112, shall not be required in a provisional application." Thus, with the exception of provisional applications filed under 35 U.S.C. 111(b), any application filed without at least one claim is incomplete and not entitled to a filing date.
>
> If a nonprovisional application does not contain at least one claim, a "Notice of Incomplete Application" will be mailed to the applicant(s) indicating that no filing date has been granted and setting a period for submitting a claim. The filing date will be the date of receipt of at least one claim. *See In re Mattson, 208 USPQ 168 (Comm'r Pat. 1980). An* oath or declaration in compliance with 37 CFR 1.63 and 37 CFR 1.64 referring to the claim being submitted is also required.

MPEP 601.01(e).

As a review of the papers deposited on October 16, 2006, reveals that no claim in accordance with 35 U.S.C. 112, is included, the application is, by statute, not entitled to a filing date of October 16, 2006.

A review of the record further reveals that the first papers containing a claim were filed on May 8, 2007. As such, the application was complete for filing date purposes on May 8, 2007, and was properly accorded a filing date of May 8, 2007.

Accordingly, the petition is **dismissed**. As the petition was not necessitated by an error on the part of the Office, the petition fee will not be refunded.

Copied from 29236395 on 04/24/2008

The application is referred to the Office of Patent Application Processing (OPAP) for further processing with a filing date of May 8, 2007. OPAP is further directed to mail a Notice to File Missing Parts in a Nonprovisional Application, requiring petitioner to submit an oath or declaration covering the application papers filed on May 8, 2007, as well as the surcharge for its late filing.

Telephone inquiries concerning this matter may be directed to the undersigned at (571) 272-3231.

D Wood

Douglas I. Wood
Senior Petitions Attorney
Office of Petitions

Copied from 29236395 on 04/24/2008

UNITED STATES PATENT AND TRADEMARK OFFICE

Commissioner for Patents
United States Patent and Trademark Office
P.O. Box 1450
Alexandria, VA 22313-1450
www.uspto.gov

COPY MAILED

JAN 07 2008

OFFICE OF PETITIONS

COOPER & DUNHAM, LLP
1185 AVENUE OF THE AMERICAS
NEW YORK NY 10036

In re Application of :
Che et al. :
Application No. 11/582,062 : DECISION ON PETITION
Filed: October 16, 2006 :
Attorney Docket No. 2587/76952/RDK :

This is a decision on the petition under the unintentional provisions of 37 CFR 1.137(b), filed July 18, 2007, to revive the above-identified application.

The petition is **DISMISSED**.

Any request for reconsideration of this decision must be submitted within TWO (2) MONTHS from the mail date of this decision. Extensions of time under 37 CFR 1.136(a) are permitted. The reconsideration request should include a cover letter entitled "Renewed Petition under 37 CFR 1.137(b)." This is **not** a final agency action within the meaning of 5 U.S.C. § 704.

This above-identified application became abandoned for failure to file a response to a Notice to File Missing Parts of Nonprovisional Application, which was mailed on November 6, 2006. The Notice to File Missing Parts set an extendable two (2) month period for reply. No timely request for extension of time was obtained under the provisions of 37 CFR §1.136(a). Accordingly, this application became abandoned on January 7, 2007. A Notice of Abandonment was mailed on July 11, 2007.

A grantable petition under 37 CFR 1.137(b) must be accompanied by: (1) the required reply, unless previously filed; (2) the petition fee as set forth in 37 CFR 1.17(m); (3) a statement that the entire delay in filing the required reply from the due date for the reply until the filing of a grantable petition pursuant to 37 CFR 1.137(b) was unintentional; and (4) any terminal disclaimer (and fee as set forth in 37 CFR 1.20(d)) required by 37 CFR 1.137(c). Where there is a question as to whether either the abandonment or the delay in filing a petition under 37 CFR 1.137 was unintentional, the Director may require additional information. See MPEP 711.03 (c)(III)(c) and (D).

The instant petition lacks item(s) (1) and (3).

As to item (1), although a declaration was submitted on petition, petitioner has failed to submit the replacement drawings as required by the Notice to File Missing Parts.

As to item (3), 37 CFR 1.137(b)(3) requires a statement that "the entire delay in filing the required reply from the due date for the reply until the filing of a grantable petition pursuant to 37 CFR 1.137(b) was unintentional."

An extension of time under 37 CFR 1.136 must be filed prior to the expiration of the maximum extendable period for reply. *See* In re Application of S., 8 USPQ2d 1630, 1631 (Comm'r Pats. 1988). Since the $225.00 extension of time fee submitted with the petition on July 18, 2007 was subsequent to the maximum extendable period for reply, this fee is unnecessary and will be credited to petitioner's deposit account.

Further correspondence with respect to this matter should be addressed as follows:

By Mail: Mail Stop PETITION
Commissioner for Patents
P. O. Box 1450
Alexandria, VA 22313-1450

By hand: U. S. Patent and Trademark Office
Customer Service Window, Mail Stop Petitions
Randolph Building
401 Dulany Street
Alexandria, VA 22314

The centralized facsimile number is **(571) 273-8300.**

Telephone inquiries concerning this decision should be directed to the undersigned at (571) 272-3215.

Charlema Grant

Charlema Grant
Petitions Attorney
Office of Petitions

UNITED STATES PATENT AND TRADEMARK OFFICE

Commissioner for Patents
United States Patent and Trademark Office
P.O. Box 1450
Alexandria, VA 22313-1450
www.uspto.gov

COOPER & DUNHAM, LLP
1185 AVENUE OF THE AMERICAS
NEW YORK NY 10036

COPY MAILED

MAR 1 7 2008

OFFICE OF PETITIONS

In re Application of :
Che et al. :
Application No. 11/582,062 : DECISION ON PETITION
Filed: October 16, 2006 :
Attorney Docket No. 2587/76952/RDK :

This is a decision on the renewed petition under the unintentional provisions of 37 CFR 1.137(b), filed January 23, 2008, to revive the above-identified application.

The petition is **DISMISSED**.

Any request for reconsideration of this decision must be submitted within TWO (2) MONTHS from the mail date of this decision. Extensions of time under 37 CFR 1.136(a) are permitted. The reconsideration request should include a cover letter entitled "Renewed Petition under 37 CFR 1.137(b)." This is **not** a final agency action within the meaning of 5 U.S.C. § 704.

This above-identified application became abandoned for failure to file a response to a Notice to File Missing Parts of Nonprovisional Application, which was mailed on November 6, 2006. The Notice to File Missing Parts set an extendable two (2) month period for reply. No timely request for extension of time was obtained under the provisions of 37 CFR §1.136(a). Accordingly, this application became abandoned on January 7, 2007. A Notice of Abandonment was mailed on July 11, 2007. A petition filed under 37 CFR 1.137(b) was dismissed on January 23, 2008.

A grantable petition under 37 CFR 1.137(b) must be accompanied by: (1) the required reply, unless previously filed; (2) the petition fee as set forth in 37 CFR 1.17(m); (3) a statement that the entire delay in filing the required reply from the due date for the reply until the filing of a grantable petition pursuant to 37 CFR 1.137(b) was unintentional; and (4) any terminal disclaimer (and fee as set forth in 37 CFR 1.20(d)) required by 37 CFR 1.137(c). Where there is a question as to whether either the abandonment or the delay in filing a petition under 37 CFR 1.137 was unintentional, the Director may require additional information. See MPEP 711.03 (c)(III)(c) and (D).

The instant petition lacks item(s) (1) and (3).

As to item (1), drawings submitted on petition do not meet the requirements of 37 CFR 1.121(d). Any changes to an application drawing must be in compliance with § 1.84 and must be submitted on a replacement sheet of drawings, which shall be an attachment to the amendment document

and, in the top margin, labeled "Replacement Sheet". Any replacement sheet of drawings shall include all of the figures appearing on the immediate prior version of the sheet, even if only one figure is amended. Any new sheet of drawings containing an additional figure must be labeled in the top margin as "New Sheet". All changes to the drawings shall be explained, in detail, in either the drawing amendment or remarks section of the amendment paper.

As to item (3), an unintentional statement, which varies from 37 CFR 1.137(b) has been provided in the petition. However, 37 CFR 1.137(b)(3) requires a statement that "**the entire delay in filing the required reply from the due date for the reply until the filing of a grantable petition pursuant to 37 CFR 1.137(b) was unintentional**."

Further correspondence with respect to this matter should be addressed as follows:

By Mail: Mail Stop PETITION
Commissioner for Patents
P. O. Box 1450
Alexandria, VA 22313-1450

By hand: U. S. Patent and Trademark Office
Customer Service Window, Mail Stop Petitions
Randolph Building
401 Dulany Street
Alexandria, VA 22314

The centralized facsimile number is **(571) 273-8300.**

Telephone inquiries concerning this decision should be directed to the undersigned at (571) 272-3215.

Charlema Grant

Charlema Grant
Petitions Attorney
Office of Petitions

UNITED STATES PATENT AND TRADEMARK OFFICE

Commissioner for Patents
United States Patent and Trademark Office
P.O. Box 1450
Alexandria, VA 22313-1450
www.uspto.gov

COOPER & DUNHAM, LLP
30 Rockefeller Plaza
20th Floor
NEW YORK NY 10112

COPY MAILED

NOV 2 4 2009

OFFICE OF PETITIONS

In re Application of :
Che et al. :
Application No. 11/582,062 :
Filed: October 16, 2006 :
Attorney Docket No. 2587/76952/RDK :

ON PETITION

This is a decision on the renewed petition under the unintentional provisions of 37 CFR 1.137(b), filed April 11, 2008, to revive the above-identified application.

The petition is **GRANTED.**

This above-identified application became abandoned for failure to file a response to a Notice to File Missing Parts of Nonprovisional Application, which was mailed on November 6, 2006. The Notice to File Missing Parts set an extendable two (2) month period for reply. No timely request for extension of time was obtained under the provisions of 37 CFR §1.136(a). Accordingly, this application became abandoned on January 7, 2007. A Notice of Abandonment was mailed on July 11, 2007. Petitions filed under 37 CFR 1.137(b) were dismissed on January 23, 2008 and March 17, 2008.

The petition satisfies the requirements of 37 CFR 1.137(b) in that petitioner has supplied (1) the reply in the form of a declaration and replacement drawings, (2) the petition fee of $750, and (3) a proper statement of unintentional delay.

This application is being referred to the Office of Patent Application Processing for pre-examination processing including review of the drawings.

Telephone inquiries concerning this decision should be directed to the undersigned at (571) 272-3215.

Charlema Grant
Petitions Attorney
Office of Petitions

UNITED STATES PATENT AND TRADEMARK OFFICE

UNITED STATES DEPARTMENT OF COMMERCE
United States Patent and Trademark Office
Address: COMMISSIONER FOR PATENTS
P.O. Box 1450
Alexandria, Virginia 22313-1450
www.uspto.gov

APPLICATION NO.	FILING DATE	FIRST NAMED INVENTOR	ATTORNEY DOCKET NO.	CONFIRMATION NO.
11/582,074	10/16/2006	William Brothers	200602568-1	8833

7590 04/22/2008
HEWLETT PACKARD COMPANY
P O BOX 272400, 3404 E. HARMONY ROAD
INTELLECTUAL PROPERTY ADMINISTRATION
FORT COLLINS, CO 80527-2400

EXAMINER
LEE, THOMAS C

ART UNIT	PAPER NUMBER
2115	

NOTIFICATION DATE	DELIVERY MODE
04/22/2008	ELECTRONIC

DECISION GRANTING PETITION UNDER 37 CFR 1.138(d)

The declaration of express abandonment is recognized

This is in response to the petition under 37 CFR 1.138(d), requesting for a refund of any previously paid search fee and excess claims fee in the above-identified application.

The petition is granted.

The express abandonment is recognized. Any previously paid search fee and excess claims fee are hereby refunded.

Telephone inquiries should be directed to the Office of Data Management at (571) 272-4200.

Patent Publication Branch
Office of Data Management

Adjustment date: 04/21/2008 DTERRY 11582074
10/19/2006 MBIZUNES 00000019 082025
02 FC:1111 500.00 CR

FORM PET651G (Rev. 08/07)

UNITED STATES PATENT AND TRADEMARK OFFICE

UNITED STATES DEPARTMENT OF COMMERCE
United States Patent and Trademark Office
Address: COMMISSIONER FOR PATENTS
P.O. Box 1450
Alexandria, Virginia 22313-1450
www.uspto.gov

APPLICATION NO.	FILING DATE	FIRST NAMED INVENTOR	ATTORNEY DOCKET NO.	CONFIRMATION NO.
11/582,074	10/16/2006	William Brothers	200602568-1	8833

22879 7590 04/22/2008
HEWLETT PACKARD COMPANY
P O BOX 272400, 3404 E. HARMONY ROAD
INTELLECTUAL PROPERTY ADMINISTRATION
FORT COLLINS, CO 80527-2400

EXAMINER
LEE, THOMAS C

ART UNIT	PAPER NUMBER
2115	

NOTIFICATION DATE	DELIVERY MODE
04/22/2008	ELECTRONIC

Please find below and/or attached an Office communication concerning this application or proceeding.

The time period for reply, if any, is set in the attached communication.

Notice of the Office communication was sent electronically on above-indicated "Notification Date" to the following e-mail address(es):

JERRY.SHORMA@HP.COM
mkraft@hp.com
ipa.mail@hp.com

UNITED STATES PATENT AND TRADEMARK OFFICE

Commissioner for Patents
United States Patent and Trademark Office
P.O. Box 1450
Alexandria, VA 22313-1450
www.uspto.gov

DOUGLAS D. DE MASI SR.
1214 BEEKMAN ROAD
HOPEWELL JUNCTION NY 12533

COPY MAILED

DEC 07 2009

OFFICE OF PETITIONS

In re Application of :
De Masi, Douglas D. Sr. :
Application No. 11/582,083 : ON PETITION
Filed: October 18, 2006 :
Title: Stern Drive Motor or Out Board Motor That Can Rotate 360 Degrees and Still Go Vertical Or Horizontal or Both at the Same Time at Any Given Time :

This is a decision on the petition under 37 C.F.R. § 1.137(b), filed May 4, 2009, to revive the above-identified application.

The petition is **DISMISSED**.

A grantable petition under 37 CFR 1.137(b) must be accompanied by:
(1) the required reply,[1]
(2) the petition fee,
(3) a statement that the entire delay in filing the required reply from the due date for the reply until the filing of a grantable petition pursuant to 37 CFR 1.137(b) was unintentional, and
(4) a terminal disclaimer and fee if the application was filed on or before June 8, 1995 or if the application is a design application.

The rules and statutory provisions governing the operations of the U.S. Patent and Trademark Office require payment of a fee on filing each petition to revive an abandoned application for patent based on unintentional delay or to accept an unintentionally delayed payment of a fee for issuing a patent. In this instance, the fee required by law is $1620.00. If applicant can qualify as a "small entity" and does so prior to or together with the payment of the fee, the fee will be one-half of the amount indicated. See 37 CFR 1.27.

The petition in the above-identified application was not accompanied by payment of the required fee. No consideration on the merits can be given to the petition until the required fee is received.

Further correspondence with respect to this matter should be addressed as follows:

By mail: Mail Stop PETITIONS
Commissioner for Patents
Post Office Box 1450
Alexandria, VA 22313-1450

[1] In a nonprovisional application abandoned for failure to prosecute, the required reply may be met by the filing of a continuing application. In an application or patent, abandoned or lapsed for failure to pay the issue fee or any portion thereof, the required reply must be the payment of the issue fee or any outstanding balance thereof.

By hand: Customer Window located at:

U.S. Patent and Trademark Office
Customer Service Window Randolph Building
401 Dulany Street
Alexandria, VA 22314

By fax: (571) 273-8300
ATTN: Office of Petitions

Any questions concerning this matter may be directed to the undersigned at (571) 272-3206.

Liana Walsh
Petitions Examiner
Office of Petitions

UNITED STATES PATENT AND TRADEMARK OFFICE

Commissioner for Patents
United States Patent and Trademark Office
P.O. Box 1450
Alexandria, VA 22313-1450
www.uspto.gov

STIPKALA, LLC
5401 NETHERBY LANE
SUITE 102-A
NORTH CHARLESTON SC 29420

COPY MAILED
DEC 19 2006
OFFICE OF PETITIONS

In re Application of	:	
Lyle J. Stuby	:	
Application No. 11/582,090	:	DECISION ON PETITION
Filed: October 17, 2006	:	TO MAKE SPECIAL UNDER
Attorney Docket No. 1003.0001	:	37 CFR 1.102(c)(1)
	:	

This is a decision on the petition under 37 CFR 1.102(c)(1), filed November 20, 2006, to make the above-identified application special based on applicant's age as set forth in M.P.E.P. § 708.02, Section IV.

The petition is **GRANTED**.

A grantable petition to make an application special under 37 CFR 1.102(c)(1) and MPEP § 708.02, Section IV: Applicant's Age must be accompanied by evidence showing that at least one of the applicants is 65 years of age, or more, such as a birth certificate or a statement by applicant. No fee is required

The instant petition includes a copy of applicants drivers license. Accordingly, the above-identified application has been accorded "special" status.

Telephone inquiries concerning this decision should be directed to April Wise at 571-272-1642.

All other inquiries concerning either the examination or status of the application should be directed to the Technology Center.

The application is being forwarded to the Technology Center Art Unit 3636 for action on the merits commensurate with this decision.

April M. Wise
Petitions Examiner
Office of Petitions

UNITED STATES PATENT AND TRADEMARK OFFICE

Commissioner for Patents
United States Patent and Trademark Office
P.O. Box 1450
Alexandria, VA 22313-1450
www.uspto.gov

Kenyon & Kenyon
One Broadway
New York, NY 10004

MAILED

MAY 0 8 2009

OFFICE OF PETITIONS

In re Application of	:	
Ashley Heather	:	
Application No. 11/582,095	:	DECISION ON PETITION
Filed: October 16, 2006	:	TO WITHDRAW
Attorney Docket No. 13725/4	:	FROM RECORD
	:	

This is a decision on the Request to Withdraw as attorney or agent of record under 37 C.F.R. § 1.36(b), filed March 5, 2009.

The request is **APPROVED**.

A grantable request to withdraw as attorney/agent of record must be signed by every attorney/agent seeking to withdraw or contain a clear indication that one attorney is signing on behalf of another/others. A request to withdraw will not be approved unless at least 30 (thirty) days would remain between the date of approval and the later of the expiration date of a time to file a response or the expiration date of the maximum time period which can be extended under 37 C.F.R. § 1.136(a).

The request was signed by Linda Lecomte on behalf of all attorneys of record. All attorneys/agents have been withdrawn. Applicant is reminded that there is no attorney of record at this time.

The request to change the correspondence of record is not acceptable as the requested correspondence address is not that of: (1) the first named signing inventor; or (2) an intervening assignee of the entire interest under 37 C.F.R 3.71. All future communications from the Office will be directed to the first named signing inventor at the first copied address below until otherwise properly notified by the applicant.

Telephone inquiries concerning this decision should be directed to Terri Williams at 571-272-2991.

Terri Williams

Terri Williams
Petitions Examiner
Office of Petitions

cc: **Ashley Heather**
158 West 75th Street
Apt. A
New York, NY 10023

cc: **Mr. Charles Darling**
250 East 77th Street, Apt. 3A
New York, NY 10075-2131

UNITED STATES PATENT AND TRADEMARK OFFICE

UNITED STATES DEPARTMENT OF COMMERCE
United States Patent and Trademark Office
Address: COMMISSIONER FOR PATENTS
P.O. Box 1450
Alexandria, Virginia 22313-1450
www.uspto.gov

APPLICATION NUMBER	FILING OR 371(C) DATE	FIRST NAMED APPLICANT	ATTY. DOCKET NO./TITLE
11/582,095	10/16/2006	Ashley Heather	13725/4

CONFIRMATION NO. 1543

POWER OF ATTORNEY NOTICE

26646
KENYON & KENYON LLP
ONE BROADWAY
NEW YORK, NY 10004

OC000000035878864

Date Mailed: 05/07/2009

NOTICE REGARDING CHANGE OF POWER OF ATTORNEY

This is in response to the Power of Attorney filed 03/05/2009.

- The withdrawal as attorney in this application has been accepted. Future correspondence will be mailed to the new address of record. 37 CFR 1.33.

/tswilliams/

Office of Data Management, Application Assistance Unit (571) 272-4000, or (571) 272-4200, or 1-888-786-0101

UNITED STATES PATENT AND TRADEMARK OFFICE

Commissioner for Patents
United States Patent and Trademark Office
P.O. Box 1450
Alexandria, VA 22313-1450
www.uspto.gov

John M. Olivo
Armstrong World Industries, inc.
2500 Columbia Avenue
P.O. Box 3001
Lancaster PA 17604-3001

COPY MAILED
JAN 14 2010

In re Application of	:	DECISION ON
Patterson et al.	:	PETITION
Application No.: 11/582100	:	
Filing or 371(c) Date: 10/17/2006	:	
Attorney Docket Number: 0617	:	

This is a decision in response to the Renewed Petition Under 37 CFR 1.181 to Withdraw Holding of Abandonment, filed March 16, 2009.

This Petition is hereby **granted**.

Background

The above-identified application became abandoned for failure to timely and properly reply to the final Office action mailed November 30, 2007. The final office action indicated that no claims were allowed. Extensions of time under 37 CFR 1.136(a) were available. No complete and proper reply having been received, the application became abandoned on March 1, 2008. A Notice of Abandonment was mailed June 5, 2008.

Applicant files the present petition and asserts that a timely response to the Office action, to wit, a Notice of Appeal and fee, and a three (3) month extension of time request and fee, were timely filed in accordance with 37 CFR 1.8. In support of this assertion, petitioner files a copy of the reply, which includes a Certificate of Mailing, a copy of a return-receipt postcard acknowledging receipt by this Office of a Notice of Appeal and a check in the amount of $1050.00, and an Extension of Time on June 2, 2008, and a statement from Linda A. Harnish attesting that on May 30, 2008, she signed the Certificate of Mailing and deposited Notice of Appeal and Petition for Extension of Time with the United States Post Office.

The file record does not include the originally submitted papers. Failure to receive correspondence which includes a certificate of mailing or certificate of facsimile transmission is addressed in 37 CFR 1.8(b), reproduced below:

> In the event that correspondence is considered timely filed by being mailed or transmitted in accordance with paragraph (a) of this section, but not received in the U.S. Patent and Trademark Office after a

reasonable amount of time has elapsed from the time of mailing or transmitting of the correspondence, or after the application is held to be abandoned, or

after the proceeding is dismissed or decided with prejudice, or the prosecution of a reexamination proceeding is terminated pursuant to § 1.550(d) or § 1.957(b) or limited pursuant to § 1.957(c), or a requester paper is refused consideration pursuant to §a), the correspondence will be considered timely if the party who forwarded such correspondence:

(1)Informs the Office of the previous mailing or transmission of the correspondence promptly after becoming aware that the Office has no evidence of receipt of the correspondence;

(2)Supplies an additional copy of the previously mailed or transmitted correspondence and certificate; and

(3)Includes a statement that attests on a personal knowledge basis or to the satisfaction of the Director to the previous timely mailing, transmission or submission. If the correspondence was sent by facsimile transmission, a copy of the sending unit's report confirming transmission may be used to support this statement. If the correspondence was transmitted via the Office electronic filing system, a copy of an acknowledgment receipt generated by the Office electronic filing system confirming submission may be used to support this statement.

(c) The Office may require additional evidence to determine if the correspondence was timely filed.

Applicant has complied with the requirements of 37 CFR 1.8(b).

In view of the foregoing, the petition is granted. The holding of abandonment is hereby withdrawn.

The application will be referred to Technology Center Art Unit 2839 for processing of the Notice of Appeal, filed June 3, 2008 (Certificate of Mailing dated May 30, 2008), and Appeal Brief filed August 6, 2008 (Certificate of Mailing dated August 4, 2008), in the normal course of business.

Telephone inquiries concerning this matter should be directed to the undersigned at (571) 272-3232.

/Derek L. Woods/
Derek L. Woods
Attorney
Office of Petitions

UNITED STATES PATENT AND TRADEMARK OFFICE

UNITED STATES DEPARTMENT OF COMMERCE
United States Patent and Trademark Office
Address: COMMISSIONER FOR PATENTS
P.O. Box 1450
Alexandria, Virginia 22313-1450
www.uspto.gov

KINNEY & LANGE, P.A.
THE KINNEY & LANGE BUILDING
312 SOUTH THIRD STREET
MINNEAPOLIS, MN 55415-1002

Mail Date: 04/21/2010

Applicant	: Marcos A.V. Peluso	: DECISION ON REQUEST FOR
Patent Number	: 7579947	: RECALCULATION of PATENT
Issue Date	: 08/25/2009	: TERM ADJUSTMENT IN VIEW
Appliction No	: 11/582,121	: OF WYETH AND NOTICE OF INTENT TO
Filed	: 10/17/2006	: ISSUE CERTIFICATE OF CORRECTION
		:

The Request for Recalculation is **GRANTED** to the extent indicated.

The patent term adjustment has been determined to be **276** days. The USPTO will *sua sponte* issue a certificate of correction reflecting the amount of PTA days determined by the recalculation.

Prior to the issuance of the certificate of correction, the USPTO will afford patentee an opportunity to be heard and request reconsideration. Accordingly, patentee has **one month or thirty (30) days**, whichever is longer, to file a request for reconsideration of this patent term adjustment calculation. See 35 U.S.C. 154(b)(3)(B)(ii) and 37 CFR 1.322(a)(4). No extensions of time will be granted under 37 CFR 1.136.

Patentee should use document code PET.OP if electronically filing a request for reconsideration of this patent term adjustment calculation. The patentee must also include the information required by 37 CFR 1.705(b)(2) and the fee required by 37 CFR 1.18(e). If patentee does not file a timely request for reconsideration of this patent term adjustment calculation including the information required by 37 CFR 1.705(b)(2) and the fee required by 37 CFR 1.18(e), the USPTO will issue a certificate of correction reflecting the PTA determination noted above.

Patentee should be aware that in order to preserve the right to review in the United States District Court for the District of Columbia of the USPTO patent term adjustment determination, patentee must ensure that he or she also take the steps required under 35 U.S.C. 154(b)(4)(A) in a timely manner. Nothing in the request for recalculation should be construed as providing an alternative time frame for commencing a civil action under 35 U.S.C. 154(b)(4)(A).

Any questions concerning this decision should be directed to the Office of Patent Legal Administration at 571-272-7702.

UNITED STATES PATENT AND TRADEMARK OFFICE

Commissioner for Patents
United States Patent and Trademark Office
P.O. Box 1450
Alexandria, VA 22313-1450
www.uspto.gov

TRASK BRITT, P.C./MICRON TECHNOLOGY
P.O. BOX 2550
SALT LAKE CITY UT 84110

MAILED

NOV 16 2009

OFFICE OF PETITIONS

In re Application of
Raymond J. Beffa
Application No. 11/582,141
Filed: October 17, 2006
Attorney Docket No. 2269-3040.7US (96-0970.07

DECISION GRANTING PETITION UNDER 37 CFR 1.313(c)(2)

This is a decision on the petition under 37 CFR 1.313(c)(2), filed November 13, 2009, to withdraw the above-identified application from issue after payment of the issue fee.

The petition is **GRANTED**.

The above-identified application is withdrawn from issue for consideration of a submission under 37 CFR 1.114 (request for continued examination). *See* 37 CFR 1.313(c)(2).

Petitioner is advised that the issue fee paid on October 13, 2009 cannot be refunded. If, however, this application is again allowed, petitioner may request that it be applied towards the issue fee required by the new Notice of Allowance.[1]

Telephone inquiries should be directed to the undersigned at (571) 272-3208.

This application is being referred to Technology Center AU 2863 for processing of the request for continued examination under 37 CFR 1.114 and for consideration of the concurrently filed IDS.

/Karen Creasy/
Karen Creasy
Petitions Examiner
Office of Petitions

---

[1] *The request to apply the issue fee to the new Notice may be satisfied by completing and returning the new Part B – Fee(s) Transmittal Form (along with any balance due at the time of submission). Petitioner is advised that the Issue Fee Transmittal Form* ***must*** *be completed and timely submitted to avoid abandonment of the application.*

UNITED STATES PATENT AND TRADEMARK OFFICE

Commissioner for Patents
United States Patent and Trademark Office
P.O. Box 1450
Alexandria, VA 22313-1450
www.uspto.gov

OCCHIUTI ROHLICEK & TSAO, LLP
10 FAWCETT STREET
CAMBRIDGE MA 02138

COPY MAILED
MAR 15 2010

In re Patent No. 7,656,864	:	
Issue Date: February 2, 2010	:	
Application No. 11/582,145	:	NOTICE
Filed: October 17, 2006	:	
Attorney Docket No. 30006-004003	:	

This is a notice regarding your request for acceptance of a fee deficiency submission under 37 CFR 1.28. On September 1, 1998, the Court of Appeals for the Federal Circuit held that 37 CFR 1.28(c) is the sole provision governing the time for correction of the erroneous payment of the issue fee as a small entity. **See DH Technology v. Synergystex International, Inc. 154 F.3d 1333, 47 USPQ2d 1865 (Fed. Cir. Sept. 1, 1998).**

The Office no longer investigates or rejects original or reissue applications under 37 CFR 1.56. **1098 Off. Gaz. Pat. Office 502 (January 3, 1989)**. Therefore, nothing in this Notice is intended to imply that an investigation was done.

Your fee deficiency submission under 37 CFR 1.28 is hereby **ACCEPTED**.

This application is no longer entitled to small entity status. Accordingly, all future fees paid in this application must be paid at the large entity rate.

Inquiries related to this communication should be directed to Diane Goodwyn at (571) 272-6735.

Thurman K. Page
Petitions Examiner
Office of Petitions

UNITED STATES PATENT AND TRADEMARK OFFICE

UNITED STATES DEPARTMENT OF COMMERCE
United States Patent and Trademark Office
Address: COMMISSIONER FOR PATENTS
P.O. Box 1450
Alexandria, Virginia 22313-1450
www.uspto.gov

DORITY & MANNING, P.A.
POST OFFICE BOX 1449
GREENVILLE, SC 29602-1449

Mail Date: 04/21/2010

Applicant	: Lee Shinaberger	: DECISION ON REQUEST FOR
Patent Number	: 7599191	: RECALCULATION of PATENT
Issue Date	: 10/06/2009	: TERM ADJUSTMENT IN VIEW
Appliction No	: 11/582,148	: OF WYETH AND NOTICE OF INTENT TO
Filed	: 10/17/2006	: ISSUE CERTIFICATE OF CORRECTION
		:

The Request for Recalculation is **GRANTED** to the extent indicated.

The patent term adjustment has been determined to be **359** days. The USPTO will *sua sponte* issue a certificate of correction reflecting the amount of PTA days determined by the recalculation.

Prior to the issuance of the certificate of correction, the USPTO will afford patentee an opportunity to be heard and request reconsideration. Accordingly, patentee has **one month or thirty (30) days**, whichever is longer, to file a request for reconsideration of this patent term adjustment calculation. See 35 U.S.C. 154(b)(3)(B)(ii) and 37 CFR 1.322(a)(4). No extensions of time will be granted under 37 CFR 1.136.

Patentee should use document code PET.OP if electronically filing a request for reconsideration of this patent term adjustment calculation. The patentee must also include the information required by 37 CFR 1.705(b)(2) and the fee required by 37 CFR 1.18(e). If patentee does not file a timely request for reconsideration of this patent term adjustment calculation including the information required by 37 CFR 1.705(b)(2) and the fee required by 37 CFR 1.18(e), the USPTO will issue a certificate of correction reflecting the PTA determination noted above.

Patentee should be aware that in order to preserve the right to review in the United States District Court for the District of Columbia of the USPTO patent term adjustment determination, patentee must ensure that he or she also take the steps required under 35 U.S.C. 154(b)(4)(A) in a timely manner. Nothing in the request for recalculation should be construed as providing an alternative time frame for commencing a civil action under 35 U.S.C. 154(b)(4)(A).

Any questions concerning this decision should be directed to the Office of Patent Legal Administration at 571-272-7702.

UNITED STATES PATENT AND TRADEMARK OFFICE

Commissioner for Patents
United States Patent and Trademark Office
P.O. Box 1450
Alexandria, VA 22313-1450
www.uspto.gov

TIMOTHY J. MARTIN, P.C.
9250 WEST 5TH AVE.
LAKEWOOD CO 80226

MAILED

FEB 0 2 2009

OFFICE OF PETITIONS

In re Application of	:	
Philip W. WYERS	:	
Application No. 11/582,158	:	DECISION ON PETITION
Filed: October 17, 2006	:	
Attorney Docket No. 2238	:	

This is a decision on the petition under the unintentional provisions of 37 CFR 1.137(b), filed January 3, 2009, to revive the above-identified application.

The petition is **GRANTED**.

The application became abandoned for failure to reply in a timely manner to the Restriction Requirement, mailed July 12, 2007, which set a shortened statutory period for reply of one (1) month or thirty (30) days (whichever is later). No extensions of time under the provisions of 37 CFR 1.136(a) were obtained. Accordingly, the application became abandoned on August 13, 2007.

The petition satisfies the requirements of 37 CFR 1.137(b) in that petitioner has supplied (1) the reply in the form of an election, (2) the petition fee of $810; and (3) the required statement of unintentional delay.

It is not apparent whether the person signing the statement of unintentional delay was in a position to have firsthand or direct knowledge of the facts and circumstances of the delay at issue. Nevertheless, such statement is being treated as having been made as the result of a reasonable inquiry into the facts and circumstances of such delay. See 37 CFR 10.18(b) and Changes to Patent Practice and Procedure; Final Rule Notice, 62 Fed. Reg. 53131, 53178 (October 10, 1997), 1203 Off. Gaz. Pat. Office 63, 103 (October 21, 1997). In the event that such an inquiry has not been made, petitioner must make such an inquiry. If such inquiry results in the discovery that it is not correct that the entire delay in filing the required reply from the due date for the reply until the filing of a grantable petition pursuant to 37 CFR 1.137(b) was unintentional, petitioner must notify the Office.

There is no indication that the person signing the petition was ever given a power of attorney to prosecute the application. If the person signing the petition desires to receive future correspondence regarding this application, the appropriate power of attorney document must be submitted. While a courtesy copy of this decision is being mailed to the person signing the petition, all future correspondence will be directed to the address currently of record until appropriate instructions are received.

Telephone inquiries concerning this decision should be directed to Diane Goodwyn at (571) 272-6735.

This application is being referred to Technology Center AU 3673 for appropriate action by the Examiner in the normal course of business on the reply received January 3, 2009.

Thurman Page
Petitions Examiner
Office of Petitions

cc: JOHN WRAY CARPENTER
555 17TH STREET, SUITE 3200
DENVER, CO 80202

UNITED STATES PATENT AND TRADEMARK OFFICE

COMMISSIONER FOR PATENTS
UNITED STATES PATENT AND TRADEMARK OFFICE
P.O. BOX 1450
ALEXANDRIA, VA 22313-1450
www.uspto.gov

13 JAN 2010

HOLLAND & HART, LLP
P.O BOX 8749
DENVER, CO 80201

In re Application of	:	
WYERS	:	
Application No.: 11/582,158	:	DECISION ON PETITION
Filing Date: October 17, 2006	:	UNDER 37 CFR 1.78
Attorney Docket No.: 59904.830007.US2	:	

This is a decision on the petition under 37 CFR 1.78(a)(6), filed October 1, 2009, to accept an unintentionally delayed claim under 35 U.S.C. 119(e) for the benefit of the prior-filed application set forth in the amendment filed September 29, 2009.

The petition is **GRANTED**.

The present nonprovisional application was filed after November 29, 2000, and the claim herein for the benefit of priority to the prior-filed provisional application is submitted after expiration of the period specified in 1.78(a)(5)(ii). Therefore, this is a proper petition under 37 CFR 1.78(a)(6).

A petition for acceptance of a late claim for priority under 1.78(a)(6) is only applicable to those applications filed on or after November 29, 2000. Further, the petition is appropriate only after the expiration of the period specified in 37 CFR 1.78(a)(5)(ii). In addition, the petition under 37 CFR 1.78(a)(6) must be accompanied by:

(1) the reference required by 35 U.S.C. 119(e) and 37 CFR 1.78(a)(5)(i) of the prior-filed application, unless previously submitted;
(2) the surcharge set forth in 37 CFR 1.17(t); and
(3) a statement that the entire delay between the date the claim was due under 37 CFR 1.78(a)(5)(ii) and the date the claim was filed was unintentional. The Director may require additional where there is a question whether the delay was unintentional.

The petition complies with the requirements for a grantable petition under 37 CFR 1.78(a)(6) in that (1) a reference to the prior-filed application has been included in an amendment to the first sentence of the specification following the title as provided by 37 CFR 1.78(a)(5)(iii); (2) the surcharge fee required by 37 CFR 1.17(t) has been submitted; and (3) the petition contains a proper statement of unintentional delay. Accordingly, having found that the petition for

acceptance of an unintentionally delayed claim for the benefit of priority under 35 U.S.C. 119(e) to the prior-filed application satisfies the conditions of 37 CFR 1.78(a)(6), the petition is granted.

The granting of the petition to accept the delayed benefit claim to the prior-filed application under 37 CFR 1.78(a)(6) should not be construed as meaning that this application is entitled to the benefit of the filing date of the prior-filed application. In order for this application to be entitled to the benefit of the prior-filed application, all other requirements under 35 U.S.C. 119(e) and 37 CFR 1.78(a)(4) and (a)(5) must be met. Similarly, the fact that the corrected Filing Receipt accompanying this decision on petition includes the prior-filed application should not be construed as meaning that applicant is entitled to the claim for benefit of priority to the prior-filed application noted thereon. Accordingly, the examiner will, in due course, consider this benefit claim and determine whether this application is entitled to the benefit of the earlier filing date.

A corrected Filing Receipt, which includes the priority claim to the prior-filed application, accompanies this decision on petition.

Any questions concerning this matter may be directed to Bryan Lin at (571) 272-3303. All other inquiries concerning either the examination procedures or status of the application should be directed to the Technology Center.

This matter is being referred to Technology Center Art Unit 3673 for appropriate action on the amendment submitted September 29, 2009, including consideration by the examiner of the claim for benefit of the prior-filed applications.

BryanLin

Bryan Lin
Legal Examiner
Office of PCT Legal Administration

ATTACHMENT: Corrected Filing Receipt

UNITED STATES PATENT AND TRADEMARK OFFICE

Commissioner for Patents
United States Patent and Trademark Office
P.O. Box 1450
Alexandria, VA 22313-1450
www.uspto.gov

MAYER & WILLIAMS PC
251 NORTH AVENUE WEST
2ND FLOOR
WESTFIELD NJ 07090

COPY MAILED
SEP 24 2008

In re Application of	:	
Reinhard BREDEHORST et al.	:	
Application No. 11/582,165	:	DECISION ON PETITION
Filed: October 17, 2006	:	
Attorney Docket No. **7003/58**	:	

This is a decision on the petition under the unintentional provisions of 37 CFR 1.137(b), filed July 21, 2008, to revive the above-identified application.

The petition is **GRANTED**.

The application became abandoned for failure to reply in a timely manner to the Notice to File Missing Parts of Nonprovisional Application (Notice), mailed November 15, 2006. The Notice set a period for reply of two (2) months from the mail date of the Notice. No extensions of time under the provisions of 37 CFR 1.136(a) were obtained. Accordingly, the application became abandoned on January 16, 2007.

The petition satisfies the requirements of 37 CFR 1.137(b) in that petitioner has supplied (1) the reply in the form of the required fees, substitute specification and oath or declaration, (2) the petition fee of $770, and (3) a proper statement of unintentional delay.

Telephone inquiries concerning this decision should be directed to Tredelle Jackson at (571) 272-2783.

This application is being referred to the Office of Patent Application Processing.

Ramesh Krishnamurthy

Ramesh Krishnamurthy
Petitions Examiner
Office of Petitions

OIPE
JUL 2 1 2008
PATENT & TRADEMARK OFFICE

IFW/DAC

Serial No.: 11/582,165

I hereby certify that this correspondence is being deposited with the United States Postal Service as First Class Mail on 7/17/08 in an envelope addressed to: Mail Stop Petition, Commissioner for Patents, P.O. Box 1450, Alexandria, VA 22313-1450.

Date 7/17/08 Sig: Marjorie Scariati

Marjorie Scariati

IN THE UNITED STATES PATENT AND TRADEMARK OFFICE

Applicant:	Reinhard Bredehorst
Serial No.:	11/582,165
Filed:	10/17/2006
Title:	METHOD FOR DETERMINING AN UNKNOWN PNA SEQUENCE AND USES THEREOF
Art Unit:	Unassigned
Examiner:	Unassigned
Confirm No.:	7757
Docket No.:	7003/58

Mail Stop Petition
Commissioner for Patents
PO Box 1450
Alexandria, VA 22313-1450

PETITION TO REVIVE UNINTENTIONALLY ABANDONED APPLICATION UNDER 37 CFR 1.137(b) AND RESPONSE TO NOTICE TO FILE MISSING PARTS

Sir:

This Petition to Revive Unintentionally Abandoned U.S. Patent Application 11/582,165 is filed in response to the Notice of Abandonment mailed July 17, 2007, copy enclosed.

As per the Notice of Abandonment, the applicant failed to file a response to the Notice to File Missing Parts mailed on November 15, 2006, copy enclosed. The entire delay in filing the required reply from the due date for the reply until the filing of this petition was unintentional.

Per the requirements of the Notice to File Missing Parts mailed November 15, 2006, Applicant submits herewith the Response to Notice to File Missing Parts, including the statutory

07/22/2008 SSANDARA 00000003 11582165
05 FC:2453 770.00 DA

filing, search and examination fees, the properly signed Declaration, the executed Power of Attorney, the executed Statement Under 37 CFR 3.73(b) with a copy of the executed Assignment document, Substitute Specification, Letter Regarding Submission of Certified Priority Document and certified copy of EP 05090287.3, Amendment Directing Entry of the Sequence Listing, including CRF of the sequence listing (3.5" diskette) and initial paper copy of same.

As applicant believes it has now met the requirements of the Notice to File Missing Parts mailed November 15, 2006. Applicant hereby petitions the Commissioner to grant this Petition to Revive. It is respectfully requested that the Notice of Abandonment be withdrawn, and that the application proceed to examination accordingly.

The PTO is hereby authorized to charge the filing, search and examination fees that are due in this matter ($515 total), as well as the $65 surcharge for late filing of the Declaration, and $770 petition fee and any deficiencies, including any extension fees that may be due in this matter, to the undersigned attorney's Deposit Account 50-1047.

Respectfully submitted,

/Stuart H. Mayer/

Stuart H. Mayer Reg. No. 35,277
Mayer & Williams, PC
251 North Avenue West, 2nd Floor
Westfield, NJ 07090

Tel.: 908-518-7700
Fax: 908-518-7795

RAM Fee History Query

Revenue Accounting and Management

Name/Number: 11582165 Total Records Found: 5

Start Date: Any Date End Date: Any Date

Accounting Date	Sequence Num.	Fee Type	Fee Code	Fee Amount	Mailroom Date	Payment Method
07/22/2008	00000003	1	2011	$155.00	07/21/2008	DA 501047
07/22/2008	00000004	1	2111	$255.00	07/21/2008	DA 501047
07/22/2008	00000005	1	2311	$105.00	07/21/2008	DA 501047
07/22/2008	00000006	1	2051	$65.00	07/21/2008	DA 501047
07/22/2008	00000007	1	2453	$770.00	07/21/2008	DA 501047

UNITED STATES PATENT AND TRADEMARK OFFICE

Commissioner for Patents
United States Patent and Trademark Office
P.O. Box 1450
Alexandria, VA 22313-1450
www.uspto.gov

GLENN C. BROWN, PC
777 NW WALL STREET, SUITE 308
BEND OR 97701

COPY MAILED
MAR 20 2007
OFFICE OF PETITIONS

In re Application of
Cooper
Application No. 11/582,166
Filed: October 16, 2006
Attorney Docket No. 3060-7

DECISION ON PETITION
TO MAKE SPECIAL UNDER
37 CFR 1.102(c)(1)

This is a decision on petition under 37 CFR 1.102(c)(1) & (c)(2)(ii), filed December 12, 2006, to make the above-identified application special based on (a) applicant's age as set forth in M.P.E.P. § 708.02, Section IV and (b) materially contributing to certain categories related to energy resource as set forth in M.P.E.P. § 708.02, Section VI.

The age petition is **DISMISSED**.

A grantable petition to make an application special under 37 CFR 1.102(c)(1) and MPEP § 708.02, Section IV: Applicant's Age must be accompanied by evidence showing that at least one of the applicants is 65 years of age, or more, such as a birth certificate or a statement by applicant. No fee is required

The instant petition does not include acceptable evidence showing that the applicant is 65 years of age, or more. To perfect the request a renewed petition may be filed providing acceptable evidence. The evidence to support the renewed petition will be available to the public.

Effective August 25, 2006, changes were implemented in the practice for petitions to make special. MPEP § 708.02(a) sets forth the requirements to meet the new standard. The new requirements were also detailed in the Official Gazette (1308 OG 106) July 16, 2006. According the petition to make special under 37 CFR 1.102 (c)(2)(ii) based on the conservation of energy resources is not being treated. If applicant want to pursue the petition under MPEP§ 708.02(a), a separate filing should be submitted according to 37 CFR 1.4(b).

This lack of meeting the evidence standards of 37 CFR 102(c)(1) does not permit the applicant to enjoy the benefit of advanced examination.

Further correspondence with respect to this matter should be addressed as follows:

By Mail: Mail Stop PETITION
Commissioner for Patents
P. O. Box 1450
Alexandria, VA 22313-1450

By hand: U. S. Patent and Trademark Office
Customer Service Window, Mail Stop Petitions
Randolph Building
401 Dulany Street
Alexandria, VA 22314

By FAX: (571) 273-8300

Telephone inquiries concerning this decision should be directed to Jefferey Harold at 571-272-7519, or to the undersigned at 571-272-7099.

All other inquiries concerning either the examination or status of the application should be directed to the Technology Center.

The application is being forwarded to the Technology Center Art Unit 2827 for action in its regular turn.

David Bucci
Petitions Examiner
Office of Petitions

UNITED STATES PATENT AND TRADEMARK OFFICE

Commissioner for Patents
United States Patent and Trademark Office
P.O. Box 1450
Alexandria, VA 22313-1450
www.uspto.gov

COPY MAILED

JUL 03 2007

OFFICE OF PETITIONS

GLENN C. BROWN, PC
777 NW WALL STREET, SUITE 308
BEND OR 97701

In re Application of	:	
Richard Cooper	:	
Application No. 11/582,166	:	DECISION ON PETITION
Filed: October 16, 2006	:	TO MAKE SPECIAL UNDER
Attorney Docket No. 3060-7	:	37 CFR 1.102(c)(1)
	:	

This is a decision on the renewed petition under 37 CFR 1.102(c)(1), filed April 16, 2007, to make the above-identified application special based on applicant's age as set forth in M.P.E.P. § 708.02, Section IV.

The age petition is **GRANTED**.

A grantable petition to make an application special under 37 CFR 1.102(c)(1) and MPEP § 708.02, Section IV: Applicant's Age must be accompanied by evidence showing that at least one of the applicants is 65 years of age, or more, such as a birth certificate or a statement by applicant. No fee is required

The instant petition includes a statement by applicant, a birth certificate and U.S. passport that show he is over 65 years of age. Accordingly, the above-identified application has been accorded "special" status.

Telephone inquiries concerning this decision should be directed to Christopher Bottorff at (571) 272-6052 or in his absence, the undersigned at 571-272-7099.

All other inquiries concerning either the examination or status of the application should be directed to the Technology Center.

The application is being forwarded to the Technology Center Art Unit 3635 for action on the merits commensurate with this decision.

David Buccei
Petitions Examiner
Office of Petitions

UNITED STATES PATENT AND TRADEMARK OFFICE

UNITED STATES DEPARTMENT OF COMMERCE
United States Patent and Trademark Office
Address: COMMISSIONER FOR PATENTS
P.O. Box 1450
Alexandria, Virginia 22313-1450
www.uspto.gov

THE PROCTER & GAMBLE COMPANY
Global Legal Department - IP
Sycamore Building - 4th Floor
299 East Sixth Street
CINCINNATI, OH 45202

Mail Date: 04/21/2010

Applicant	: Blanca Arizti	: DECISION ON REQUEST FOR
Patent Number	: 7654993	: RECALCULATION of PATENT
Issue Date	: 02/02/2010	: TERM ADJUSTMENT IN VIEW
Appliction No	: 11/582,189	: OF WYETH AND NOTICE OF INTENT TO
Filed	: 10/17/2006	: ISSUE CERTIFICATE OF CORRECTION
		:

The Request for Recalculation is **GRANTED** to the extent indicated.

The patent term adjustment has been determined to be **103** days. The USPTO will *sua sponte* issue a certificate of correction reflecting the amount of PTA days determined by the recalculation.

Prior to the issuance of the certificate of correction, the USPTO will afford patentee an opportunity to be heard and request reconsideration. Accordingly, patentee has **one month or thirty (30) days**, whichever is longer, to file a request for reconsideration of this patent term adjustment calculation. See 35 U.S.C. 154(b)(3)(B)(ii) and 37 CFR 1.322(a)(4). No extensions of time will be granted under 37 CFR 1.136.

Patentee should use document code PET.OP if electronically filing a request for reconsideration of this patent term adjustment calculation. The patentee must also include the information required by 37 CFR 1.705(b)(2) and the fee required by 37 CFR 1.18(e). If patentee does not file a timely request for reconsideration of this patent term adjustment calculation including the information required by 37 CFR 1.705(b)(2) and the fee required by 37 CFR 1.18(e), the USPTO will issue a certificate of correction reflecting the PTA determination noted above.

Patentee should be aware that in order to preserve the right to review in the United States District Court for the District of Columbia of the USPTO patent term adjustment determination, patentee must ensure that he or she also take the steps required under 35 U.S.C. 154(b)(4)(A) in a timely manner. Nothing in the request for recalculation should be construed as providing an alternative time frame for commencing a civil action under 35 U.S.C. 154(b)(4)(A).

Any questions concerning this decision should be directed to the Office of Patent Legal Administration at 571-272-7702.

UNITED STATES PATENT AND TRADEMARK OFFICE

Commissioner for Patents
United States Patent and Trademark Office
P.O. Box 1450
Alexandria, VA 22313-1450
www.uspto.gov

SEED INTELLECTUAL PROPERTY
LAW GROUP PLLC
701 FIFTH AVE
SUITE 5400
SEATTLE, WA 98104

COPY MAILED

DEC 1 0 2007

OFFICE OF PETITIONS

In re Application of

Jih Sheng Lai

Application No. 11/582,209

Filed: October 16, 2006

Attorney Docket No. 130209.494D1

DECISION ON PETITION

This is a decision on the petition under 37 CFR §1.137(b), November 21, 2007, to revive the above-identified application.

The petition is **granted**.

This application became abandoned for failure to timely remit the issue fee of $1440.00 and publication fee of $300.00 as required by the Notice of Allowance and Issue Fee Due (the "Notice") mailed June 21, 2007. The Notice set forth a three (3) month statutory period for reply. No response was received within the allowable period. Accordingly, this application became abandoned on September 22, 2006.

The issue fee and publication fee will be charged to deposit account 50-1482.

Form PTOL-85B, filed November 21, 2007, is noted.

It is not apparent whether the person signing the statement of unintentional delay was in a position to have firsthand or direct knowledge of the facts and circumstances of the delay at issue. Nevertheless, such statement is being treated as having been made as the result of a reasonable inquiry into the facts and circumstances of such delay. See 37 CFR 10.18(b) and Changes to Patent Practice and Procedure; Final Rule Notice, 62 Fed. Reg. 53131, 53178 (October 10, 1997), 1203 Off. Gaz. Pat. Office 63, 103 (October 21, 1997). In the event that such an inquiry has not been made, petitioner must make such an inquiry. If such inquiry results in the discovery that it is not correct that the entire delay in filing the required reply from the due date for the reply until the filing of a grantable petition pursuant to 37 CFR 1.137(b) was unintentional, petitioner must notify the Office.

There is no indication that the person signing the instant petition was ever given a power of attorney or authorization of agent to prosecute the above-identified application. If the person signing the instant petition desires to receive future correspondence regarding this application, the appropriate power of attorney or authorization of agent must be submitted. While a courtesy copy of this decision is being

mailed to the person signing the instant petition, all future correspondence will be directed to the address of currently of record until such time as appropriate instructions are received to the contrary.

The application is being directed to the Office of Patent Publications for further processing.

Telephone inquiries concerning this decision may be directed to the undersigned at (571) 272-3222.

Kenya A. McLaughlin
Petitions Attorney
Office of Petitions

cc:
John Siragusa
Carlson Gaskey & Olds, PC
400 West Maple Road
Suite 350
Birmingham, MI 48009

PART B - FEE(S) TRANSMITTAL

Complete and send this form, together with applicable fee(s), to: Mail Mail Stop ISSUE FEE
Commissioner for Patents
P.O. Box 1450
Alexandria, Virginia 22313-1450
or Fax (571)-273-2885

INSTRUCTIONS: This form should be used for transmitting the ISSUE FEE and PUBLICATION FEE (if required). Blocks 1 through 5 should be completed where appropriate. All further correspondence including the Patent, advance orders and notification of maintenance fees will be mailed to the current correspondence address as indicated unless corrected below or directed otherwise in Block 1, by (a) specifying a new correspondence address; and/or (b) indicating a separate "FEE ADDRESS" for maintenance fee notifications.

CURRENT CORRESPONDENCE ADDRESS (Note: Use Block 1 for any change of address)

500 7590 06/21/2007

SEED INTELLECTUAL PROPERTY LAW GROUP PLLC
701 FIFTH AVE
SUITE 5400
SEATTLE, WA 98104

12/10/2007 CKHLOK 00000018 501482 11582209

01 FC:1501 1440.00 DA
02 FC:1504 300.00 DA

Note: A certificate of mailing can only be used for domestic mailings of the Fee(s) Transmittal. This certificate cannot be used for any other accompanying papers. Each additional paper, such as an assignment or formal drawing, must have its own certificate of mailing or transmission.

Certificate of Mailing or Transmission
I hereby certify that this Fee(s) Transmittal is being deposited with the United States Postal Service with sufficient postage for first class mail in an envelope addressed to the Mail Stop ISSUE FEE address above, or being facsimile transmitted to the USPTO (571) 273-2885, on the date indicated below.

Amy M. Spaulding (Depositor's name)
(Signature)
November 21, 2007 (Date)

APPLICATION NO.	FILING DATE	FIRST NAMED INVENTOR	ATTORNEY DOCKET NO.	CONFIRMATION NO.
11/582,209	10/16/2006	Jih-Sheng Lai	130209.494D1	1079

TITLE OF INVENTION: TOPOLOGIES FOR USING MULTIPLE ENERGY SOURCES FOR POWER CONVERSIONS

APPLN. TYPE	SMALL ENTITY	ISSUE FEE DUE	PUBLICATION FEE DUE	PREV. PAID ISSUE FEE	TOTAL FEE(S) DUE	DATE DUE
nonprovisional	NO	$1400	$300	$0	$1700	09/21/2007

EXAMINER	ART UNIT	CLASS-SUBCLASS
DEBERADINIS, ROBERT L	2836	307-066000

1. Change of correspondence address or indication of "Fee Address" (37 CFR 1.363).
☐ Change of correspondence address (or Change of Correspondence Address form PTO/SB/122) attached.
☐ "Fee Address" indication (or "Fee Address" Indication form PTO/SB/47; Rev 03-02 or more recent) attached. Use of a Customer Number is required.

2. For printing on the patent front page, list
(1) the names of up to 3 registered patent attorneys or agents OR, alternatively,
(2) the name of a single firm (having as a member a registered attorney or agent) and the names of up to 2 registered patent attorneys or agents. If no name is listed, no name will be printed.

1 Carlson, Gaskey & Olds
2
3

3. ASSIGNEE NAME AND RESIDENCE DATA TO BE PRINTED ON THE PATENT (print or type)

PLEASE NOTE: Unless an assignee is identified below, no assignee data will appear on the patent. If an assignee is identified below, the document has been filed for recordation as set forth in 37 CFR 3.11. Completion of this form is NOT a substitute for filing an assignment.

(A) NAME OF ASSIGNEE: Siemens VDO Automotive Corporation

(B) RESIDENCE: (CITY and STATE OR COUNTRY): Auburn Hills, MI

Please check the appropriate assignee category or categories (will not be printed on the patent): ☐ Individual ☒ Corporation or other private group entity ☐ Government

4a. The following fee(s) are submitted:
☒ Issue Fee
☒ Publication Fee (No small entity discount permitted)
☐ Advance Order - # of Copies _____

4b. Payment of Fee(s): (Please first reapply any previously paid issue fee shown above)
☐ A check is enclosed.
☐ Payment by credit card. Form PTO-2038 is attached.
☒ The Director is hereby authorized to charge the required fee(s), any deficiency, or credit any overpayment, to Deposit Account Number 50-1482 (enclose an extra copy of this form).

5. Change in Entity Status (from status indicated above)
☐ a. Applicant claims SMALL ENTITY status. See 37 CFR 1.27.
☐ b. Applicant is no longer claiming SMALL ENTITY status. See 37 CFR 1.27(g)(2).

NOTE: The Issue Fee and Publication Fee (if required) will not be accepted from anyone other than the applicant; a registered attorney or agent; or the assignee or other party in interest as shown by the records of the United States Patent and Trademark Office.

Authorized Signature _____ Date November 21, 2007

Typed or printed name John M. Siragusa Registration No. 46,174

This collection of information is required by 37 CFR 1.311. The information is required to obtain or retain a benefit by the public which is to file (and by the USPTO to process) an application. Confidentiality is governed by 35 U.S.C. 122 and 37 CFR 1.14. This collection is estimated to take 12 minutes to complete, including gathering, preparing, and submitting the completed application form to the USPTO. Time will vary depending upon the individual case. Any comments on the amount of time you require to complete this form and/or suggestions for reducing this burden, should be sent to the Chief Information Officer, U.S. Patent and Trademark Office, U.S. Department of Commerce, P.O. Box 1450, Alexandria, Virginia 22313-1450. DO NOT SEND FEES OR COMPLETED FORMS TO THIS ADDRESS. SEND TO: Commissioner for Patents, P.O. Box 1450, Alexandria, Virginia 22313-1450.

Under the Paperwork Reduction Act of 1995, no persons are required to respond to a collection of information unless it displays a valid OMB control number.

UNITED STATES PATENT AND TRADEMARK OFFICE

4-30-08

Commissioner for Patents
United States Patent and Trademark Office
P.O. Box 1450
Alexandria, VA 22313-1450
www.uspto.gov

Patent No. : 7,336,004
Ser. No. : 11/582,209
Inventor(s) : Jih-Sheng Lai
Issued : February 26, 2008
Title : TOPOLOGIES FOR USING MULTIPE ENERGY SOURCES FRO POWER CONVERSIONS

Re: Request for Certificate of Correction

Consideration has been given your request for the issuance of a certificate of correction for the above-identified patent under the provisions of Rule(s) 1.322 or 1.323.

Assignees' names and addresses (assignment data) printed in a patent, are based *solely* on information supplied in the appropriate space for identifying the assignment data, i.e., item 3 of the Issue Fee Transmittal Form PTOL-85B. Granting of a request under 37 CFR 3.81(b) is required to correct applicant's error providing ***incorrect or erroneous*** assignment data, *before* issuance of a Certificate of Correction, under 37 CFR 1.323 *(see Manual of Patent Examining Procedures (M.P.E.P) Chp.1400, sect. 1481).* This procedure is required *at any time after the issue fee is paid*, including after issuance of the patent.

In view of the foregoing, your request is hereby denied.

A request to correct the Assignee under 37 CFR 3.81(b) should include:

A. **the processing fee set forth in 37 CFR 1.117(h) (currently $130);**
B. a statement that the failure to include the correct assignee name on the PTOL-85B was inadvertent; and
C. a copy of the Notice of Recordation of Assignment Document, reflecting the reel and frame number where the assignment(s) is recorded and/or reflecting proof of *the date* the assignment was submitted for recordation.

In the Request, Applicant(s) may request that the file be forwarded to Certificates of Correction Branch, for issuance of a Certificate of Correction, if the Request is granted.

Any request under 37 CFR 3.81(b) should be directed to the following address or facsimile number:

By mail: Mail Stop PETITIONS
Commissioner for Patents
Post Office Box 1450
Alexandria, VA 22313-1450

By hand: Customer Service Window
Mail Stop Petitions
Randolph Building
401 Dulany Street
Alexandria, VA 22314

By fax: (703) 872-9306
ATTN: Office of Petitions

If a fee (currently $100) was previously submitted for consideration of a Request for Certificate of Correction, under CFR 1.323, to correct assignment data, , no additional fee is required.

Eva James
For Cecelia Newman
Decisions & Certificates
of Correction Branch
(703) **308-9390 ext. 124** or 105

Michael C. Greenbaum
Blank Rome LLP
Watergate, 600 New Hampshire Ave., N.W.
Washington, DC 20037

ej

UNITED STATES PATENT AND TRADEMARK OFFICE

Commissioner for Patents
United States Patent and Trademark Office
P.O. Box 1450
Alexandria, VA 22313-1450
www.uspto.gov

BLANK ROME LLP
WATERGATE
600 NEW HAMPSHIRE AVENUE, N.W.
WASHINGTON DC 20037

MAILED

JUL 24 2009

OFFICE OF PETITIONS

In re Patent of Lai	:	
Patent No. 7,336,004	:	
Issue Date: February 26, 2008	:	Letter
Application No. 11/582,209	:	
Filing Date: October 16, 2006	:	
Attorney Docket No. 124617-00227	:	

This is a letter in response to request under 37 CFR 3.81 filed July 1, 2008, to accept the correction of the assignee data on the front page of the above-identified patent.

The request under 37 CFR 3.81 is **GRANTED**.

A request under 37 CFR 3.81(b) will be granted when:

(1) A request under 37 CFR 3.81 and the fee set forth in 37 CFR 1.17(i) are filed,
(2) The assignment was submitted for recordation prior to issuance of the patent, and
(3) A request for a certificate of correction and the fee set forth in 37 CFR 1.20(a) are submitted.

Patentee has met the requirements set forth above. Therefore, the request is granted.

Although the fee for the instant request was charged to petitioner's deposit account on July 1, 2008, the fee for the certificate of correction was not charged to the deposit account at that time or when the first request for the certificate of correction was made on March 5, 2008. Therefore, the Office has charged the $100 fee to petitioner's deposit account.

The Office notes Certificates of Correction Branch previously issued the requested certificate of correction on March 24, 2009.

Telephone inquiries regarding this communication should be directed to Petitions Attorney Steven Brantley at (571) 272-3203.

Charles Steven Brantley
Senior Petitions Attorney
Office of Petitions

UNITED STATES PATENT AND TRADEMARK OFFICE

UNITED STATES DEPARTMENT OF COMMERCE
United States Patent and Trademark Office
Address: COMMISSIONER FOR PATENTS
P.O. Box 1450
Alexandria, Virginia 22313-1450
www.uspto.gov

INTELLECTUAL PROPERTY MANAGEMENT
BOEING MANAGEMENT COMPANY
P.O. BOX 2515
MAIL CODE 110-SD54
SEAL BEACH, CA 90740-1515

Mail Date: 04/20/2010

Applicant	: Joseph E. Absalonson	: DECISION ON REQUEST FOR
Patent Number	: 7644491	: RECALCULATION of PATENT
Issue Date	: 01/12/2010	: TERM ADJUSTMENT IN VIEW
Appliction No	: 11/582,217	: OF WYETH AND NOTICE OF INTENT TO
Filed	: 10/17/2006	: ISSUE CERTIFICATE OF CORRECTION
		:

The Request for Recalculation is **GRANTED** to the extent indicated.

The patent term adjustment has been determined to be **757** days. The USPTO will *sua sponte* issue a certificate of correction reflecting the amount of PTA days determined by the recalculation.

Prior to the issuance of the certificate of correction, the USPTO will afford patentee an opportunity to be heard and request reconsideration. Accordingly, patentee has **one month or thirty (30) days**, whichever is longer, to file a request for reconsideration of this patent term adjustment calculation. See 35 U.S.C. 154(b)(3)(B)(ii) and 37 CFR 1.322(a)(4). No extensions of time will be granted under 37 CFR 1.136.

Patentee should use document code PET.OP if electronically filing a request for reconsideration of this patent term adjustment calculation. The patentee must also include the information required by 37 CFR 1.705(b)(2) and the fee required by 37 CFR 1.18(e). If patentee does not file a timely request for reconsideration of this patent term adjustment calculation including the information required by 37 CFR 1.705(b)(2) and the fee required by 37 CFR 1.18(e), the USPTO will issue a certificate of correction reflecting the PTA determination noted above.

Patentee should be aware that in order to preserve the right to review in the United States District Court for the District of Columbia of the USPTO patent term adjustment determination, patentee must ensure that he or she also take the steps required under 35 U.S.C. 154(b)(4)(A) in a timely manner. Nothing in the request for recalculation should be construed as providing an alternative time frame for commencing a civil action under 35 U.S.C. 154(b)(4)(A).

Any questions concerning this decision should be directed to the Office of Patent Legal Administration at 571-272-7702.

UNITED STATES PATENT AND TRADEMARK OFFICE

UNITED STATES DEPARTMENT OF COMMERCE
United States Patent and Trademark Office
Address: COMMISSIONER FOR PATENTS
P.O. Box 1450
Alexandria, Virginia 22313-1450
www.uspto.gov

CARLSON, GASKEY & OLDS/PRATT & WHITNEY
400 WEST MAPLE ROAD
SUITE 350
BIRMINGHAM, MI 48009

Mail Date: 07/07/2010

Applicant	: Michael Winter	: DECISION ON REQUEST FOR
Patent Number	: 7637095	: RECALCULATION of PATENT
Issue Date	: 12/29/2009	: TERM ADJUSTMENT IN VIEW
Application No	: 11/582,219	: OF WYETH AND NOTICE OF INTENT TO
Filed	: 10/17/2006	: ISSUE CERTIFICATE OF CORRECTION
		:

The Request for Recalculation is **GRANTED** to the extent indicated.

The patent term adjustment has been determined to be **592** days. The USPTO will *sua sponte* issue a certificate of correction reflecting the amount of PTA days determined by the recalculation.

Prior to the issuance of the certificate of correction, the USPTO will afford patentee an opportunity to be heard and request reconsideration. Accordingly, patentee has **one month or thirty (30) days**, whichever is longer, to file a request for reconsideration of this patent term adjustment calculation. See 35 U.S.C. 154(b)(3)(B)(ii) and 37 CFR 1.322(a)(4). No extensions of time will be granted under 37 CFR 1.136.

Patentee should use document code PET.OP if electronically filing a request for reconsideration of this patent term adjustment calculation. The patentee must also include the information required by 37 CFR 1.705(b)(2) and the fee required by 37 CFR 1.18(e). If patentee does not file a timely request for reconsideration of this patent term adjustment calculation including the information required by 37 CFR 1.705(b)(2) and the fee required by 37 CFR 1.18(e), the USPTO will issue a certificate of correction reflecting the PTA determination noted above.

Patentee should be aware that in order to preserve the right to review in the United States District Court for the District of Columbia of the USPTO patent term adjustment determination, patentee must ensure that he or she also take the steps required under 35 U.S.C. 154(b)(4)(A) in a timely manner. Nothing in the request for recalculation should be construed as providing an alternative time frame for commencing a civil action under 35 U.S.C. 154(b)(4)(A).

Any questions concerning this decision should be directed to the Office of Patent Legal Administration at 571-272-7702.

UNITED STATES PATENT AND TRADEMARK OFFICE

Commissioner for Patents
United States Patent and Trademark Office
P.O. Box 1450
Alexandria, VA 22313-1450
www.uspto.gov

Date: 12/09/08

Patent No. : 7440853 B2
Ser. No. : 11/582,222
Inventor(s) : KRUMHANSL, PETER A.
Issued : 10/21/08
Title : **SYSTEMS AND METHODS FOR DETECTING SHALLOW BURIED OBJECTS**
Docket No. : **BBNT-390-101**

Re: Request for Certificate of Correction

Consideration has been given your request for the issuance of a certificate of correction for the above-identified patent under the provisions of Rule(s) 1.322 and/or 1.323.

Assignees' names and addresses (assignment data) printed in a patent, are based *solely* on information supplied in the appropriate space for identifying the assignment data, i.e., item 3 of the Issue Fee Transmittal Form PTOL-85B. Granting of a request under 37 CFR 3.81(b) is required to correct applicant's error providing ***incorrect or erroneous*** assignment data, *before* issuance of a Certificate of Correction, under 37 CFR 1.323 *(see Manual of Patent Examining Procedures (M.P.E.P) Chp.1400, sect. 1481).* This procedure is required *at any time after the issue fee is paid*, including after issuance of the patent.

In view of the foregoing, your request, in this mater, is hereby denied.

A request to correct the Assignee under 37 CFR 3.81(b) should include:

A. **the processing fee set forth in 37 CFR 1.117(h) (currently $130);**
B. a statement that the failure to include the correct assignee name on the PTOL-85B was inadvertent; and
C. a copy of the Notice of Recordation of Assignment Document, reflecting the reel and frame number where the assignment(s) is recorded and/or reflecting proof of *the date* the assignment was submitted for recordation.

In the Request, Applicant(s) may request that the file be forwarded to Certificates of Correction Branch, for issuance of a Certificate of Correction, if the Request is granted.

Any request under 37 CFR 3.81(b) should be directed to the following address or facsimile number:

By mail: Mail Stop PETITIONS

Commissioner for Patents
Post Office Box 1450
Alexandria, VA 22313-1450

By hand: Customer Service Window
Mail Stop Petitions
Randolph Building
401 Dulany Street
Alexandria, VA 22314

By fax: (571) 273-0025
ATTN: Office of Petitions

If a fee (currently $100) was previously submitted for consideration of a Request for Certificate of Correction, under CFR 1.323, to correct assignment data, no additional fee is required.

Lamonte M. Newsome

Lamonte M. Newsome
For Mary Diggs, Supervisor
Decisions & Certificates
Of Correction Branch
(703) 305-8309 or (703) 308-9390 #112

ROPES & GRAY LLP
PATENT DOCKETING 39/41
ONE INTERNATIONAL PLACE
BOSTON MA 02110-2624

LMN

UNITED STATES PATENT AND TRADEMARK OFFICE

Commissioner for Patents
United States Patent and Trademark Office
P.O. Box 1450
Alexandria, VA 22313-1450
www.uspto.gov

ROPES & GRAY LLP
PATENT DOCKETING 39/41
ONE INTERNATIONAL PLACE
BOSTON MA 02110-2624

MAILED

JUL 0 2 2009

OFFICE OF PETITIONS

In re Patent No. 7,440,853	:	
Application No. 11/582,222	:	
Filed: October 16, 2006	:	ON PETITION
Issued: October 21, 2008	:	
Attorney Docket No. BBNT-390-101	:	

This is a decision on the petition filed April 29, 2009, which is being treated as a request under 37 CFR 3.81(b)[1] to add the name of the second assignee on the front page of the above-identified patent by way of a Certificate of Correction.

The request is **GRANTED**.

Petitioner states that only an additional $30.00 is required for the processing fee required by 37 CFR 3.81(b). However, the $100.00 previously submitted on November 19, 2008 was for the Certificate of Correction fee, which is also required. Accordingly, the full $130.00 processing fee will be charged to petitioner's deposit account as authorized.

This matter is being referred to the Certificates of Correction Branch for issuance of the requested Certificate of Correction.

Telephone inquiries concerning this decision may be directed to the undersigned at (571) 272-3206. Inquiries regarding the issuance of a certificate of correction should be directed to the Certificate of Correction Branch at (571) 272-4200.

Liana Walsh
Petitions Examiner
Office of Petitions

[1] *See* MPEP 1309, subsection II; and Official Gazette of June 22, 2004.

UNITED STATES PATENT AND TRADEMARK OFFICE

Commissioner for Patents
United States Patent and Trademark Office
P.O. Box 1450
Alexandria, VA 22313-1450
www.uspto.gov

WOODCOCK WASHBURN LLP
ONE LIBERTY PLACE, 46TH FLOOR
1650 MARKET STREET
PHILADELPHIA PA 19103

COPY MAILED
NOV 09 2006
OFFICE OF PETITIONS

In re Application of	:	
Benjamin M. Galkin	:	
Application No. 11/582,243	:	DECISION ON PETITION
Filed: October 17, 2006	:	TO MAKE SPECIAL UNDER
Attorney Docket No. GALK-0011	:	37 CFR 1.102(c)(1)
	:	

This is a decision on the petition under 37 CFR 1.102(c)(1), filed October 17, 2006, to make the above-identified application special based on applicant's age as set forth in M.P.E.P. § 708.02, Section IV.

The petition is **GRANTED**.

A grantable petition to make an application special under 37 CFR 1.102(c)(1) and MPEP § 708.02, Section IV: Applicant's Age, must be accompanied by evidence showing that at least one of the applicants is 65 years of age, or more, such as a birth certificate or a statement by applicant. No fee is required.

The instant petition includes a statement from the applicant declaring that he is 65 years of age or older. Accordingly, the above-identified application has been accorded "special" status.

Telephone inquiries concerning this decision should be directed to Terri Williams at 571-272-2991.

All other inquiries concerning either the examination or status of the application should be directed to the Technology Center.

The application is being forwarded to the Technology Center Art Unit 2882 for action on the merits commensurate with this decision.

Terri Williams

Terri Williams
Petitions Examiner
Office of Petitions

UNITED STATES PATENT AND TRADEMARK OFFICE

UNITED STATES DEPARTMENT OF COMMERCE
United States Patent and Trademark Office
Address: COMMISSIONER FOR PATENTS
P.O. Box 1450
Alexandria, Virginia 22313-1450
www.uspto.gov

LAW OFFICES OF EUGENE M. CUMMINGS, P.C.
ONE NORTH WACKER DRIVE
SUITE 4130
CHICAGO, IL 60606

Mail Date: 04/21/2010

Applicant	: Ryan W. Swartzendruber	: DECISION ON REQUEST FOR
Patent Number	: 7626794	: RECALCULATION of PATENT
Issue Date	: 12/01/2009	: TERM ADJUSTMENT IN VIEW
Appliction No	: 11/582,256	: OF WYETH AND NOTICE OF INTENT TO
Filed	: 10/16/2006	: ISSUE CERTIFICATE OF CORRECTION
		:

The Request for Recalculation is **GRANTED** to the extent indicated.

The patent term adjustment has been determined to be **505** days. The USPTO will *sua sponte* issue a certificate of correction reflecting the amount of PTA days determined by the recalculation.

Prior to the issuance of the certificate of correction, the USPTO will afford patentee an opportunity to be heard and request reconsideration. Accordingly, patentee has **one month or thirty (30) days**, whichever is longer, to file a request for reconsideration of this patent term adjustment calculation. See 35 U.S.C. 154(b)(3)(B)(ii) and 37 CFR 1.322(a)(4). No extensions of time will be granted under 37 CFR 1.136.

Patentee should use document code PET.OP if electronically filing a request for reconsideration of this patent term adjustment calculation. The patentee must also include the information required by 37 CFR 1.705(b)(2) and the fee required by 37 CFR 1.18(e). If patentee does not file a timely request for reconsideration of this patent term adjustment calculation including the information required by 37 CFR 1.705(b)(2) and the fee required by 37 CFR 1.18(e), the USPTO will issue a certificate of correction reflecting the PTA determination noted above.

Patentee should be aware that in order to preserve the right to review in the United States District Court for the District of Columbia of the USPTO patent term adjustment determination, patentee must ensure that he or she also take the steps required under 35 U.S.C. 154(b)(4)(A) in a timely manner. Nothing in the request for recalculation should be construed as providing an alternative time frame for commencing a civil action under 35 U.S.C. 154(b)(4)(A).

Any questions concerning this decision should be directed to the Office of Patent Legal Administration at 571-272-7702.

UNITED STATES PATENT AND TRADEMARK OFFICE

Commissioner for Patents
United States Patent and Trademark Office
P.O. Box 1450
Alexandria, VA 22313-1450
www.uspto.gov

RAY K. SHAHANI, ESQ., ATTORNEY AT LAW
TWIN OAKS OFFICE PLAZA
477 NORTH NINTH AVENUE, SUITE 112
SAN MATEO CA 94402-1858

COPY MAILED

NOV 14 2006

OFFICE OF PETITIONS

In re Application of	:	
SIMPSON	:	
Application No. 11/582,276	:	DECISION ON PETITION
Filed: October 16, 2006	:	TO MAKE SPECIAL UNDER
Attorney Docket No. HGS-101	:	37 CFR 1.102(c)(1)
	:	

This is a decision on the petition under 37 CFR 1.102(c)(1), filed October 16, 2006, to make the above-identified application special based on applicant's age as set forth in M.P.E.P. § 708.02, Section IV.

The petition is **GRANTED**.

A grantable petition to make an application special under 37 CFR 1.102(c)(1) and MPEP § 708.02, Section IV: Applicant's Age, must be accompanied by evidence showing that at least one of the applicants is 65 years of age, or more, such as a birth certificate or a statement by applicant. No fee is required.

The evidence submitted with the instant petition is a copy of Mr. Simpson's California Driver License indicating that he is at least 65 years of age. Accordingly, the above-identified application has been accorded "special" status.

Telephone inquiries concerning this decision should be directed to Patricia Volpe at 571-272-6825.

All other inquiries concerning either the examination or status of the application should be directed to the Technology Center.

The application is being forwarded to the Technology Center Art Unit 3617 for action on the merits commensurate with this decision.

Patricia Volpe
Petitions Examiner
Office of Petitions

UNITED STATES PATENT AND TRADEMARK OFFICE

Commissioner for Patents
United States Patent and Trademark Office
P.O. Box 1450
Alexandria, VA 22313-1450
www.uspto.gov

FOLEY & LARDNER LLP
975 PAGE MILL ROAD
PALO ALTO CA 94304

COPY MAILED

AUG 1 0 2009

OFFICE OF PETITIONS

In re Application of	:	
Andrei W. Konradi et al.	:	
Application No. 11/582,293	:	DECISION ON PETITION
Filed: October 16, 2006	:	TO WITHDRAW
Attorney Docket No. **342837-1584**	:	FROM RECORD
	:	

This is a decision on the Request to Withdraw as attorney or agent of record under 37 CFR § 1.36(b), filed July 14, 2009.

The request is **NOT APPROVED**.

A review of the file record indicates that Antionette F. Konski does not have power of attorney or was ever given power of attorney in this patent application. Accordingly, the request to withdraw under 37 CFR § 1.36(b) is not applicable.

It is also noted that the request does not contain the address for the first named inventor nor the assignee of record was not provided in the request. The Office will only accept changes to the most current address information provided for the assignee of the entire interest that properly became of record under 37 CFR 3.71 or, the most current address of the first named inventor.

All future communications from the Office will continue to be directed to the address of record until otherwise properly notified by the applicant.

Telephone inquires concerning this decision should be directed to JoAnne Burke at 571-272-4584.

JoAnne Burke
Petitions Examiner
Office of Petitions

UNITED STATES PATENT AND TRADEMARK OFFICE

Commissioner for Patents
United States Patent and Trademark Office
P.O. Box 1450
Alexandria, VA 22313-1450
www.uspto.gov

SWISS TANNER, P.C.
P.O. BOX 1749
FOUR MAIN STREET, SUITE 100
LOS ALTOS CA 94022

COPY MAILED
FEB 25 2010

In re Application of	:	
Konradi et al.	:	
Application No. 11/582,293	:	ON PETITION
Filed: October 16, 2006	:	
Attorney Docket No. 342837-1584	:	

This is a decision on the petition under 37 C.F.R. § 1.137(b), filed December 14, 2009, to revive the above-identified application.

The petition is **DISMISSED AS MOOT**.

A final Office action was mailed on March 17, 2009. On July 16, 2009, an Amendment and Reply under 37 CFR 1.116 was submitted, along with a one-month extension of time. As such, the amendment was timely.

On October 19, 2009, a Notice of Allowance was issued, requiring payment of the issue and publication fees by January 19, 2010. The petitioner has submitted by the $1510.00 issue fee and the $300.00 publication fee with the instant petition. Accordingly, the instant application has never been abandoned and the instant petition is hereby dismissed as moot.

In view of the above, the $1620.00 petition fee has not been and will not be charged.

This matter is being referred to the Office of Data Management for processing into a patent.

Any questions concerning this matter may be directed to the undersigned at (571) 272-3206.

Liana Walsh
Petitions Examiner
Office of Petitions

UNITED STATES PATENT AND TRADEMARK OFFICE

Commissioner for Patents
United States Patent and Trademark Office
P.O. Box 1450
Alexandria, VA 22313-1450
www.uspto.gov

Peter G. Carroll
MEDLEN & CARROLL, LLP
Suite 350
101 Howard Street
San Francisco CA 94105

COPY MAILED

MAY 22 2008

OFFICE OF PETITIONS

In re Application of	:	
Jerzy Olejnik et al.	:	DECISION REFUSING STATUS
Application No. 11/582,294	:	UNDER 37 CFR 1.47(a)
Filed: October 17, 2006	:	
Attorney Docket No. AMBER-11089	:	

This is in response to the petition under 37 CFR 1.47(a), filed August 20, 2007.

The petition is **dismissed**.

Rule 47 applicant is given TWO MONTHS from the mailing date of this decision to reply, correcting the below-noted deficiencies. Any reply should be entitled "Request for Reconsideration of Petition Under 37 CFR 1.47(a)," and should only address the deficiencies noted below, except that the reply may include an oath or declaration executed by the non-signing inventor. **FAILURE TO RESPOND WILL RESULT IN ABANDONMENT OF THE APPLICATION.** Any extensions of time will be governed by 37 CFR 1.136(a).

A grantable petition under 37 CFR 1.47(a) requires: (1) proof that the non-signing inventor cannot be reached or refuses to sign the oath or declaration after having been presented with the application papers (specification, claims and drawings); (2) an acceptable oath or declaration in compliance with 35 U.S.C. §§ 115 and 116; (3) the petition fee; and (4) a statement of the last known address of the non-signing inventor. Applicant lacks item (1).

As to item (1), the applicable statute (35 U.S.C.§ 116) requires that a "diligent effort" have been expended in attempting to find or reach the non-signing inventor. *See* MPEP 409.03(a). Petitioner currently fails to demonstrate, with a documented showing, that a diligent effort was made to find or locate non-signing inventor Olejnik, such that the declaration can be accepted under 37 CFR 1.47(a). Where inability to find or locate a named inventor(s) is alleged, a statement of facts should be submitted that fully describes the exact facts which are relied on to establish that a *diligent effort* was made to locate the inventor.

The petition does not clearly indicate if inventor Olejnik cannot be found or if he refuses to sign. Where there is an express or oral refusal, that fact, along with the time and place of the refusal, must be stated in an affidavit or declaration by the party to whom the refusal was made. Where there is a written refusal, a copy of the document(s) evidencing that refusal must be made part of the affidavit or declaration.

Petitioner has not demonstrated that all efforts were expended in trying to locate inventor non-signing Olejnik. In this regard, petitioner should, at the very least, conduct a search of the regional or national registry(s). The results of such search should be made in any future petition for reconsideration. *See* MPEP 409.03(d). Additionally, petitioner should state whether he has access to inventor Olejnik's personnel records and, if so, what does inspection of the records reveal as to a current address, forwarding address, or an address of the nearest living relative? What does inspection of the phone directories for those address locations reveal?

Furthermore, Petitioner indicates that contact with inventor Olejnik was attempted through mail in the U.S. Postal Service, Federal Express and e-mail. The facts of record do not indicate that the previous mailings included a request for a return receipt and/or forwarding address. Although the mailing through Federal Express was tracked, the tracking records provided with the petition indicate that the shipment was merely left at the front door of the designated address. This is not indicative of a diligent effort to locate the inventor.

At the very least, petitioner should mail correspondence to the inventor's last known address, return receipt and/or forwarding address requested. If a forwarding address is provided, petitioner should then mail a complete copy of the application papers (specification, claims, drawings, oath, etc.) to Mr. Olejnik's address, return receipt requested, along with a cover letter of instructions which includes a deadline or a statement that no response will constitute a refusal. This sort of ultimatum lends support to a finding of refusal by conduct. If the papers are returned and all other attempts to locate or reach the inventor, e.g., through personnel records, co-workers, E-mail, the Internet or the telephone, etc., continue to fail, then applicant will have established that the inventor cannot be reached after diligent effort or has refused to join in the application. **The statements of facts must be signed, where at all possible, by a person having firsthand knowledge of the facts recited therein and should be accompanied by documentary evidence in support of the statement of facts.** It is important that the forthcoming communication contain statements of fact as opposed to conclusions.

When it is concluded by the rule 47 applicant that an omitted inventor's conduct constitutes a refusal, all facts upon which that conclusion is based should be stated in an affidavit or declaration. If there is documentary evidence to support facts alleged in the affidavit or declaration, such evidence must be submitted.

Whenever an omitted inventor gives a reason for refusing to sign the application oath or declaration, that reason should be stated in the affidavit or declaration.

Additionally, while the petition indicates that a copy of the application as filed was presented to inventor Olejnik, the evidence of record, *i.e.*, the copies of letters and e-mails to Olejnik, indicate

that only a copy of an assignment and an oath/declaration were forwarded to Olejnik. Petitioner must provide proof that a *bona fide* attempt was made to present a copy of the application papers (specification, claims, drawings, oath, etc.) to the nonsigning inventor for signature.

Also, in regard to the petition fee, a check for $130.00 was received and charged for this petition. However, the correct fee under 37 CFR 1.17(g), as required under 37 CFR 1.47, is $200.00. Accordingly, $70.00 has been charged to Deposit Account No. 08-1290 as authorized by Peter G. Carroll in the petition filed August 20, 2007.

Petitioner should note that the assignment presented with the petition has been recorded by the U.S. Patent and Trademark Office, but that recordation does not definitively establish ownership rights. Even the granting of a petition under 37 CFR 1.47 does not alter the ownership interest or title of the application. *See* MPEP 409.03.

Further correspondence with respect to this matter should be addressed as follows:

By mail: Mail Stop PETITIONS
Commissioner for Patents
Post Office Box 1450
Alexandria, VA 22313-1450

By hand: Customer Service Window
Mail Stop Petitions
Randolph Building
401 Dulany Street
Alexandria, VA 22314

By fax: (571) 273-8300
ATTN: Office of Petitions

Telephone inquiries should be directed to Christopher Bottorff at (571) 272-6692.

David Bucci
Petitions Examiner
Office of Petitions

UNITED STATES PATENT AND TRADEMARK OFFICE

Commissioner for Patents
United States Patent and Trademark Office
P.O. Box 1450
Alexandria, VA 22313-1450
www.uspto.gov

Peter G. Carroll
MEDLEN & CARROLL, LLP
Suite 350
101 Howard Street
San Francisco CA 94105

COPY MAILED

AUG 12 2008

In re Application of	:	
Jerzy Olejnik et al.	:	DECISION GRANTING STATUS
Application No. 11/582,294	:	UNDER 37 CFR 1.47(a)
Filed: December 17, 2006	:	
Attorney Docket No. AMBER-11089	:	

This is in response to the renewed petition under 37 CFR 1.47(a), filed July 18, 2008.

The petition is **GRANTED.**

Petitioner has shown that the non-signing inventor has refused to join in the filing of the above-identified application.

The application and papers have been reviewed and found in compliance with 37 CFR 1.47(a). This application is hereby accorded Rule 1.47(a) status.

As provided in 37 CFR 1.47(c), this Office will forward notice of this application's filing to the non-signing inventor at the address given in the petition. Notice of the filing of this application will also be published in the Official Gazette.

This application is being referred to the Office of Initial Patent Examination for pre-examination processing.

Telephone inquiries regarding this decision should be directed to Christopher Bottorff at (571) 272-6692.

David Bucci
Petitions Examiner
Office of Petitions

UNITED STATES PATENT AND TRADEMARK OFFICE

Commissioner for Patents
United States Patent and Trademark Office
P.O. Box 1450
Alexandria, VA 22313-1450
www.uspto.gov

Dr. Jerzy Olejnik
48 Beaconsfield Road
Brookline, MA 02445

COPY MAILED
AUG 12 2008

In re Application of
Jerzy Olejnik et al.
Application No. 11/582,294
Filed: October 17, 2006
For: Photocleavable Isotope-Coded Affinity Tags

Dear Dr. Olejnik:

You are named as a joint inventor in the above-identified United States patent application, filed under the provisions of 35 U.S.C. 116 (United States Code), and 37 CFR 1.47(a), Rules of Practice in Patent Cases. Should a patent be granted on the application you will be designated therein as a joint inventor.

As a named inventor you are entitled to inspect any paper in the file wrapper of the application, order copies of all or any part thereof (at a prepaid cost per 37 CFR 1.19) or make your position of record in the application. Alternatively, you may arrange to do any of the preceding through a registered patent attorney or agent presenting written authorization from you. If you care to join the application, counsel of record (see below) would presumably assist you. Joining the application would entail the filing of an appropriate oath or declaration by you pursuant to 37 CFR 1.63.

Telephone inquiries regarding this communication should be directed to Christopher Bottorff at (571) 272-6692. Requests for information regarding your application should be directed to the File Information Unit at (703) 308-2733. Information regarding how to pay for and order a copy of the application, or a specific paper in the application, should be directed to the Certification Division at (571) 272-3150 or 1 (800) 972-6382 (outside the Washington, DC area).

David Bucci
Petitions Examiner
Office of Petitions

cc: Peter G. Carroll
MEDLEN & CARROLL, LLP
Suite 350
101 Howard Street
San Francisco CA 94105

UNITED STATES PATENT AND TRADEMARK OFFICE

UNITED STATES DEPARTMENT OF COMMERCE
United States Patent and Trademark Office
Address: COMMISSIONER FOR PATENTS
P.O. Box 1450
Alexandria, Virginia 22313-1450
www.uspto.gov

Peter G. Carroll
MEDLEN & CARROLL, LLP
Suite 350
101 Howard Street
San Francisco, CA 94105

Mail Date: 04/21/2010

Applicant	: Jerzy Olejnik	: DECISION ON REQUEST FOR
Patent Number	: 7595198	: RECALCULATION of PATENT
Issue Date	: 09/29/2009	: TERM ADJUSTMENT IN VIEW
Appliction No	: 11/582,294	: OF WYETH AND NOTICE OF INTENT TO
Filed	: 10/17/2006	: ISSUE CERTIFICATE OF CORRECTION
		:

The Request for Recalculation is **GRANTED** to the extent indicated.

The patent term adjustment has been determined to be **150** days. The USPTO will *sua sponte* issue a certificate of correction reflecting the amount of PTA days determined by the recalculation.

Prior to the issuance of the certificate of correction, the USPTO will afford patentee an opportunity to be heard and request reconsideration. Accordingly, patentee has **one month or thirty (30) days**, whichever is longer, to file a request for reconsideration of this patent term adjustment calculation. See 35 U.S.C. 154(b)(3)(B)(ii) and 37 CFR 1.322(a)(4). No extensions of time will be granted under 37 CFR 1.136.

Patentee should use document code PET.OP if electronically filing a request for reconsideration of this patent term adjustment calculation. The patentee must also include the information required by 37 CFR 1.705(b)(2) and the fee required by 37 CFR 1.18(e). If patentee does not file a timely request for reconsideration of this patent term adjustment calculation including the information required by 37 CFR 1.705(b)(2) and the fee required by 37 CFR 1.18(e), the USPTO will issue a certificate of correction reflecting the PTA determination noted above.

Patentee should be aware that in order to preserve the right to review in the United States District Court for the District of Columbia of the USPTO patent term adjustment determination, patentee must ensure that he or she also take the steps required under 35 U.S.C. 154(b)(4)(A) in a timely manner. Nothing in the request for recalculation should be construed as providing an alternative time frame for commencing a civil action under 35 U.S.C. 154(b)(4)(A).

Any questions concerning this decision should be directed to the Office of Patent Legal Administration at 571-272-7702.

UNITED STATES PATENT AND TRADEMARK OFFICE

Commissioner for Patents
United States Patent and Trademark Office
P.O. Box 1450
Alexandria, VA 22313-1450
www.uspto.gov

COPY MAILED

SEP 20 2007

OFFICE OF PETITIONS

MORRISON & FOERSTER LLP
1650 TYSONS BOULEVARD
SUITE 400
MCLEAN, VA 22102

In re Application of
Thomas ROHR, et al
Application No. 11/582,347
Filed: October 18, 2006
Attorney Docket No. 602422000100

DECISION ON PETITION TO WITHDRAW FROM RECORD

This is a decision on the Request to Withdraw as attorney or agent of record under 37 C.F.R. § 1.36(b), filed May 7, 2007.

The request is **APPROVED**.

A grantable request to withdraw as attorney/agent of record must be signed by every attorney/agent seeking to withdraw or contain a clear indication that one attorney is signing on behalf of another/others. A request to withdraw will not be approved unless at least 30 (thirty) days would remain between the date of approval and the later of the expiration date of a time to file a response or the expiration date of the maximum time period which can be extended under 37 C.F.R. § 1.136(a).

The request was signed by Deborah S. Gladstein on behalf of all attorneys of record who are associated with customer No. 25227.

All attorneys/agents associated with Customer Number 25227 have been withdrawn.

Applicant is reminded that there is no attorney of record at this time.

The request to change the correspondence of record is not acceptable as the requested correspondence address is not that of: (1) the first named signing inventor; or (2) an intervening assignee of the entire interest under 37 C.F.R 3.71. All future communications from the Office will be directed to the first named signing inventor at the first copied address below until otherwise properly notified by the applicant.

In order to request or take action in a patent matter, the assignee must establish its ownership of the patent to the satisfaction of the Director. In this regard, a Statement under 37 CFR 3.73(b) must have either: (i) documentary evidence of a chain of title from the original owner to the assignee (*e.g.*, copy of an executed assignment), and a statement affirming that the documentary evidence of the chain of title from the original owner to the assignee was or concurrently is being submitted for recordation pursuant to § 3.11; or (ii) a statement specifying where documentary evidence of a chain of title from the original owner to the assignee is recorded in the assignment records of the Office (*e.g.*, reel and frame number).

There are no Office actions pending at the present time.

Telephone inquiries concerning this decision should be directed to Diane Goodwyn at 571-272-6735.

April Wise
Petitions Examiner
Office of Petitions

cc: THOMAS ROHR
GAUSSRING 8
85609 ASCHHEIM
GERMANY

cc: SLATER & MATSIL L.L.P.
17950 PRESTON ROAD,
SUITE 1000
DALLAS, TX 75252

UNITED STATES PATENT AND TRADEMARK OFFICE

UNITED STATES DEPARTMENT OF COMMERCE
United States Patent and Trademark Office
Address: COMMISSIONER FOR PATENTS
P.O. Box 1450
Alexandria, Virginia 22313-1450
www.uspto.gov

APPLICATION NO.	FILING DATE	FIRST NAMED INVENTOR	ATTORNEY DOCKET NO.	CONFIRMATION NO.
11/582,359	10/18/2006	Yosi Shani	32557	8992

67801 7590 07/14/2010
MARTIN D. MOYNIHAN d/b/a PRTSI, INC.
P.O. BOX 16446
ARLINGTON, VA 22215

EXAMINER
HEALY, BRIAN

ART UNIT	PAPER NUMBER
2883	

MAIL DATE	DELIVERY MODE
07/14/2010	PAPER

Please find below and/or attached an Office communication concerning this application or proceeding.

The time period for reply, if any, is set in the attached communication.

UNITED STATES PATENT AND TRADEMARK OFFICE

Commissioner for Patents
United States Patent and Trademark Office
P.O. Box 1450
Alexandria, VA 22313-1450
www.uspto.gov

MARTIN D. MOYNIHAN d/b/a PRTSI, INC.
P.O. Box 16446
Arlington, VA 22215

In re Application of: Yosi Shani Serial No.: 11/582,359 Filed: 18 October 2006 Attorney Docket No.: 32557	:::: :	DECISION ON PETITION FOR ACCEPTANCE OF PHOTOGRAPHS UNDER 37 CFR 1.84(b)(1) and (2)

This is a decision on the petition, filed on 18 October, 2006 and supplemented on 20 June 2010, to accept color and/or black and white photographs under 37 CFR 1.84(b)(1) and (2).

The petition is **GRANTED**.

The petition complies with the conditions for a grantable petition under 37 CFR 1.84(b)(1) and (2).

The petition includes an appropriate and acceptable explanation regarding why the color and/or black and white photographs are necessary, the required petition fee, three sets of photographs, and the specification has been amended to include the required paragraph in the brief description of the drawings.

Accordingly, the color and/or black and white photographs are accepted as formal drawings in the above-referenced application.

Any inquiries regarding this decision should be directed to the undersigned at (571) 272-2319.

Mark A. Robinson, Supervisory Patent Examiner
Technology Center 2800
Semiconductors, Electrical and Optical
Systems and Components

UNITED STATES PATENT AND TRADEMARK OFFICE

Commissioner for Patents
United States Patent and Trademark Office
P.O. Box 1450
Alexandria, VA 22313-1450
www.uspto.gov

LAW OFFICE OF DUANE S. KOBAYASHI
P.O. Box 4160
Leesburg VA 20177

MAILED

APR 07 2010

OFFICE OF PETITIONS

In re Application of :
ASIF HUSSAIN et al. :
Application No. 11/582,371 : ON PETITION
Filed: OCTOBER 18, 2006 :
Attorney Docket No. BU5539/BCOM0040000 :

This is a decision on the petition under 37 CFR 1.137(b), filed January 27, 2010, to revive the above-identified application.

The petition is **GRANTED**.

The above-identified application became abandoned for failure to reply in a timely manner to the non-final Office action mailed May 28, 2009, which set a shortened statutory period for reply of three (3) months. No extension of time under the provisions of 37 CFR 1.136(a) was obtained. Accordingly, the above-identified application became abandoned on August 29, 2009.

The petition satisfies the conditions for revival pursuant to the provisions of 37 CFR 1.137(b) in that (1) the reply in the form of an amendment; (2) the petition fee of $1,620; and (3) the required statement of unintentional delay have been received. Accordingly, the reply to the non-final Office Action of May 28, 2009 is accepted as having been unintentionally delayed.

The file does not indicate a change of address has been submitted, although the address given on the petition differs from the address of record. If appropriate, a change of address should be filed in accordance with MPEP 601.03. A courtesy copy of this decision is being mailed to the address given on the petition; however, the Office will mail all future correspondence solely to the address of record.

Telephone inquiries concerning this decision should be directed to Miranda Le at (571) 272-4112 or in her absence, the undersigned at (571) 272-7099.

The application file is being referred to Technology Center AU 2115 for appropriate action on the concurrently filed amendment.

David Bucci
Petitions Examiner
Office of Petitions

CC: DUANE S. KOBAYASHI
1325 MURRAY DOWNS WAY
RESTON, VA 20194

UNITED STATES PATENT AND TRADEMARK OFFICE

COMMISSIONER FOR PATENTS
UNITED STATES PATENT AND TRADEMARK OFFICE
P.O. BOX 1450
ALEXANDRIA, VA 22313-1450
www.uspto.gov
DIW Sep-08

STAAS & HALSEY LLP
SUITE 700
1201 NEW YORK AVENUE, N.W.
WASHINGTON DC 20005

COPY MAILED

SEP 30 2008

OFFICE OF PETITIONS

In re Application of	:	
Ninomiya et al.	:	DECISION ON PETITION
Application No. 11/582377	:	
Filing Date: 10/18/2006	:	
Attorney Docket Number:	:	
1573.1018D	:	

This is a decision on the petition under 37 CFR 1.59(b), filed on July 25, 2008, requesting that a paper filed on November 16, 2007, be expunged.

The petition is **GRANTED-IN-PART**.

Petitioners' counsel requests that the Response to Restriction Requirement filed on November 16, 2007 be expunged because it was submitted in an incorrect application. Petitioners state that the paper was intended to be filed in Application No. 11/582,388, but that the subject application number was incorrectly listed on the first page of the Response filed on November 16, 2007.

Petitioner therefore seeks to have this document expunged from the file.

37 C.F.R. §1.59 sets forth:

§ 1.59 Expungement of information or copy of papers in application file.
(a)
(1) Information in an application will not be expunged, except as provided in paragraph (b) of this section.
(2) Information forming part of the original disclosure (i.e., written specification including the claims, drawings, and any preliminary amendment specifically incorporated into an executed oath or declaration under §§ 1.63 and 1.175) will not be expunged from the application file.
(b) An applicant may request that the Office expunge information, other than what is excluded by paragraph (a)(2) of this section, by filing a petition under this paragraph. Any petition to expunge information from an application must include the fee set forth in § 1.17(h) and establish to the satisfaction of the Director that the expungement of the information is appropriate in which case a notice granting the petition for expungement will be provided.

(c) Upon request by an applicant and payment of the fee specified in § 1.19(b), the Office will furnish copies of an application, unless the application has been disposed of (see §§ 1.53(e), (f) and (g)). The Office cannot provide or certify copies of an application that has been disposed of.

[48 FR 2710, Jan. 20, 1983, effective Feb. 27, 1983; 49 FR 554, Jan. 4, 1984, effective Apr. 1, 1984; 49 FR 48416, Dec. 12, 1984, effective Feb. 11, 1985; 50 FR 23123, May 31, 1985, effective Feb. 11, 1985; revised, 60 FR 20195, Apr. 25, 1995, effective June 8, 1995; revised, 62 FR 53131, Oct. 10, 1997, effective Dec. 1, 1997; para. (b) revised, 65 FR 54604, Sept. 8, 2000, effective Nov. 7, 2000; para. (b) revised, 68 FR 14332, Mar. 25, 2003, effective May 1, 2003; revised, 68 FR 38611, June 30, 2003, effective July 30, 2003]

The matter petitioners wish to have expunged does not form part of the original disclosure. Petitioners have included the fee associated with the filing of petition under 37 C.F.R. §1.59 and has established to the satisfaction of the Director that the expungement of this information is appropriate.

As such, the electronic documents which contain these pages have been closed in the Office's Image File Wrapper software viewing program. The paper documents will not be removed from the physical file however, as the Office does not remove papers from paper files which have been scanned.

The general phone number for the Office of Petitions, which should be used for status requests, is (571) 272-3282. Telephone inquiries regarding *this decision* should be directed to Senior Petitions Attorney Douglas I. Wood at (571) 272-3231.

Anthony Knight
Supervisor
Office of Petitions

Cc:

HARNESS, DICKEY & PIERCE, P.L.C.
P.O. BOX 8910
RESTON VA 20195

UNITED STATES PATENT AND TRADEMARK OFFICE

UNITED STATES DEPARTMENT OF COMMERCE
United States Patent and Trademark Office
Address: COMMISSIONER FOR PATENTS
P.O. Box 1450
Alexandria, Virginia 22313-1450
www.uspto.gov

VENABLE LLP
P.O. BOX 34385
WASHINGTON, DC 20043-9998

Mail Date: 04/21/2010

Applicant	: Heinz-Friedrich Wattenberg	: DECISION ON REQUEST FOR
Patent Number	: 7611555	: RECALCULATION of PATENT
Issue Date	: 11/03/2009	: TERM ADJUSTMENT IN VIEW
Appliction No	: 11/582,384	: OF WYETH AND NOTICE OF INTENT TO
Filed	: 10/18/2006	: ISSUE CERTIFICATE OF CORRECTION
		:

The Request for Recalculation is **GRANTED** to the extent indicated.

The patent term adjustment has been determined to be **439** days. The USPTO will *sua sponte* issue a certificate of correction reflecting the amount of PTA days determined by the recalculation.

Prior to the issuance of the certificate of correction, the USPTO will afford patentee an opportunity to be heard and request reconsideration. Accordingly, patentee has **one month or thirty (30) days**, whichever is longer, to file a request for reconsideration of this patent term adjustment calculation. See 35 U.S.C. 154(b)(3)(B)(ii) and 37 CFR 1.322(a)(4). No extensions of time will be granted under 37 CFR 1.136.

Patentee should use document code PET.OP if electronically filing a request for reconsideration of this patent term adjustment calculation. The patentee must also include the information required by 37 CFR 1.705(b)(2) and the fee required by 37 CFR 1.18(e). If patentee does not file a timely request for reconsideration of this patent term adjustment calculation including the information required by 37 CFR 1.705(b)(2) and the fee required by 37 CFR 1.18(e), the USPTO will issue a certificate of correction reflecting the PTA determination noted above.

Patentee should be aware that in order to preserve the right to review in the United States District Court for the District of Columbia of the USPTO patent term adjustment determination, patentee must ensure that he or she also take the steps required under 35 U.S.C. 154(b)(4)(A) in a timely manner. Nothing in the request for recalculation should be construed as providing an alternative time frame for commencing a civil action under 35 U.S.C. 154(b)(4)(A).

Any questions concerning this decision should be directed to the Office of Patent Legal Administration at 571-272-7702.

UNITED STATES PATENT AND TRADEMARK OFFICE

Commissioner for Patents
United States Patent and Trademark Office
P.O. Box 1450
Alexandria, VA 22313-1450
www.uspto.gov

OLIFF & BERRIDGE PLC
PO BOX 320850
ALEXANDRIA VA 22320-4850

COPY MAILED

DEC 0 4 2008

OFFICE OF PETITIONS

In re Application of	:	
Maruyama, et al.	:	
Application No. 11/582,430	:	ON PETITION
Filed: October 18, 2006	:	
Attorney Docket No. 129790	:	

This is a decision on the petition to withdraw the holding of abandonment under 37 CFR 1.181, filed November 7, 2008.

The petition is **GRANTED**.

This application was held abandoned for failure to timely file a response to the non-final Office action mailed February 13, 2008. This Office set a shortened statutory period for reply of three (3) months. No issue fee having been received, the application became abandoned on May 14, 2008. The Office mailed a Notice of Abandonment on November 3, 2008.

It is obvious from reviewing the file that the February 13, 2008 Office action was not received, as it was returned to the Office as undeliverable on February 14, 2008.

In view thereof, **THE HOLDING OF ABANDONMENT IS WITHDRAWN.**

The application is being forwarded to Group Art Unit 2834 for re-mailing of the February 13, 2008 Office action, setting a new period for reply.

Telephone inquiries regarding this decision should be directed to the undersigned at (571)272-3207.

Cliff Congo
Petitions Attorney
Office of Petitions

UNITED STATES PATENT AND TRADEMARK OFFICE

UNITED STATES DEPARTMENT OF COMMERCE
United States Patent and Trademark Office
Address: COMMISSIONER FOR PATENTS
P.O. Box 1450
Alexandria, Virginia 22313-1450
www.uspto.gov

ROYLANCE, ABRAMS, BERDO & GOODMAN, L.L.P.
1300 19TH STREET, N.W.
SUITE 600
WASHINGTON,, DC 20036

Mail Date: 04/21/2010

Applicant	: Vladislav Terekhov	: DECISION ON REQUEST FOR
Patent Number	: 7604316	: RECALCULATION of PATENT
Issue Date	: 10/20/2009	: TERM ADJUSTMENT IN VIEW
Appliction No	: 11/582,435	: OF WYETH AND NOTICE OF INTENT TO
Filed	: 10/18/2006	: ISSUE CERTIFICATE OF CORRECTION
		:

The Request for Recalculation is **GRANTED** to the extent indicated.

The patent term adjustment has been determined to be **249** days. The USPTO will *sua sponte* issue a certificate of correction reflecting the amount of PTA days determined by the recalculation.

Prior to the issuance of the certificate of correction, the USPTO will afford patentee an opportunity to be heard and request reconsideration. Accordingly, patentee has **one month or thirty (30) days**, whichever is longer, to file a request for reconsideration of this patent term adjustment calculation. See 35 U.S.C. 154(b)(3)(B)(ii) and 37 CFR 1.322(a)(4). No extensions of time will be granted under 37 CFR 1.136.

Patentee should use document code PET.OP if electronically filing a request for reconsideration of this patent term adjustment calculation. The patentee must also include the information required by 37 CFR 1.705(b)(2) and the fee required by 37 CFR 1.18(e). If patentee does not file a timely request for reconsideration of this patent term adjustment calculation including the information required by 37 CFR 1.705(b)(2) and the fee required by 37 CFR 1.18(e), the USPTO will issue a certificate of correction reflecting the PTA determination noted above.

Patentee should be aware that in order to preserve the right to review in the United States District Court for the District of Columbia of the USPTO patent term adjustment determination, patentee must ensure that he or she also take the steps required under 35 U.S.C. 154(b)(4)(A) in a timely manner. Nothing in the request for recalculation should be construed as providing an alternative time frame for commencing a civil action under 35 U.S.C. 154(b)(4)(A).

Any questions concerning this decision should be directed to the Office of Patent Legal Administration at 571-272-7702.

SPE RESPONSE FOR CERTIFICATE OF CORRECTION

DATE : 8/6/08

Paper No.: —

TO SPE OF : ART UNIT 2852

SUBJECT : Request for Certificate of Correction for Appl. No.: 11/582438 Patent No: 7330683 B2

A response is requested with respect to a request for a certificate of correction.

With respect to the change(s) requested to correct Office and/or Applicant's errors, should the patent read as shown in the certificate of correction attached herewith or the COCIN document(s), in IFW images for the above-identified patented application? No new matter should be introduced, nor should the scope or meaning of the claims be changed.

If the response is for an IFW, within 7 days, please complete and forward the response, to the employee (named below) via scanning into application images, using document code **COCX**.

If the response is for a paper file wrapper, please complete the response and forward the response with the paper file wrapper, to the employee (named below), within 7 days, to:

Certificates of Correction Branch (CofC)
South Tower - 9A22
Palm Location 7580

VIRGINIA TOLBERT
Certificates of Correction Branch
703-308-9390 ext. 113

Thank You For Your Assistance

The request for issuing the above-identified correction(s) is hereby:
Note your decision on the appropriate box.

- ☒ **Approved** — All changes apply.
- ☐ **Approved in Part** — Specify below which changes **do not** apply.
- ☐ **Denied** — State the reasons for denial below.

Comments: Change as requested

SPE

9/16/08
Art Unit

PTOL-306 (REV. 7/03)

U.S. DEPARTMENT OF COMMERCE Patent and Trademark Office

UNITED STATES PATENT AND TRADEMARK OFFICE

Commissioner for Patents
United States Patent and Trademark Office
P.O. Box 1450
Alexandria, VA 22313-1450
www.uspto.gov

MCDERMOTT WILL & EMERY LLP
600 13TH STREET, NW
WASHINGTON DC 20005-3096

COPY MAILED
FEB 18 2010

In re Application of	:	
Saichirou Kaneko, et al.	:	
Application No. 11/582,441	:	DECISION GRANTING PETITION
Filed: October 18, 2008	:	UNDER 37 CFR 1.313(c)(2)
Attorney Docket No. 071971-0804	:	

This is a decision on the petition under 37 CFR 1.313(c)(2), filed, February 17, 2010 to withdraw the above-identified application from issue after payment of the issue fee.

The petition is **GRANTED**.

The above-identified application is withdrawn from issue for consideration of a submission under 37 CFR 1.114 (request for continued examination). *See* 37 CFR 1.313(c)(2).

Petitioner is advised that the issue fee paid on January 12, 2010 cannot be refunded. If, however, this application is again allowed, petitioner may request that it be applied towards the issue fee required by the new Notice of Allowance.[1]

Telephone inquiries should be directed to Terri Johnson at (571) 272-2991.

This application is being referred to Technology Center AU 2815 for processing of the request for continued examination under 37 CFR 1.114 and for consideration of the concurrently filed information disclosure statement.

Terri Johnson
Petitions Examiner
Office of Petitions

---

[1] *The request to apply the issue fee to the new Notice may be satisfied by completing and returning the new Part B – Fee(s) Transmittal Form (along with any balance due at the time of submission). Petitioner is advised that the Issue Fee Transmittal Form* ***must*** *be completed and timely submitted to avoid abandonment of the application.*

UNITED STATES PATENT AND TRADEMARK OFFICE

UNITED STATES DEPARTMENT OF COMMERCE
United States Patent and Trademark Office
Address: COMMISSIONER FOR PATENTS
P.O. Box 1450
Alexandria, Virginia 22313-1450
www.uspto.gov

YOUNG & THOMPSON
209 Madison Street
Suite 500
Alexandria, VA 22314

Mail Date: 07/13/2010

Applicant	: Shinya Onda	: DECISION ON REQUEST FOR
Patent Number	: 7646458	: RECALCULATION of PATENT
Issue Date	: 01/12/2010	: TERM ADJUSTMENT IN VIEW
Application No	: 11/582,453	: OF WYETH AND NOTICE OF INTENT TO
Filed	: 10/18/2006	: ISSUE CERTIFICATE OF CORRECTION
		:

The Request for Recalculation is **GRANTED** to the extent indicated.

The patent term adjustment has been determined to be **381** days. The USPTO will *sua sponte* issue a certificate of correction reflecting the amount of PTA days determined by the recalculation.

Prior to the issuance of the certificate of correction, the USPTO will afford patentee an opportunity to be heard and request reconsideration. Accordingly, patentee has **one month or thirty (30) days**, whichever is longer, to file a request for reconsideration of this patent term adjustment calculation. See 35 U.S.C. 154(b)(3)(B)(ii) and 37 CFR 1.322(a)(4). No extensions of time will be granted under 37 CFR 1.136.

Patentee should use document code PET.OP if electronically filing a request for reconsideration of this patent term adjustment calculation. The patentee must also include the information required by 37 CFR 1.705(b)(2) and the fee required by 37 CFR 1.18(e). If patentee does not file a timely request for reconsideration of this patent term adjustment calculation including the information required by 37 CFR 1.705(b)(2) and the fee required by 37 CFR 1.18(e), the USPTO will issue a certificate of correction reflecting the PTA determination noted above.

Patentee should be aware that in order to preserve the right to review in the United States District Court for the District of Columbia of the USPTO patent term adjustment determination, patentee must ensure that he or she also take the steps required under 35 U.S.C. 154(b)(4)(A) in a timely manner. Nothing in the request for recalculation should be construed as providing an alternative time frame for commencing a civil action under 35 U.S.C. 154(b)(4)(A).

Any questions concerning this decision should be directed to the Office of Patent Legal Administration at 571-272-7702.

UNITED STATES PATENT AND TRADEMARK OFFICE

UNITED STATES DEPARTMENT OF COMMERCE
United States Patent and Trademark Office
Address: COMMISSIONER FOR PATENTS
P.O. Box 1450
Alexandria, Virginia 22313-1450
www.uspto.gov

APPLICATION NO.	FILING DATE	FIRST NAMED INVENTOR	ATTORNEY DOCKET NO.	CONFIRMATION NO.
11/582,459	10/18/2006	Toshiyuki Nishihara	SON-3630	9999

23353 7590 12/22/2009
RADER FISHMAN & GRAUER PLLC
LION BUILDING
1233 20TH STREET N.W., SUITE 501
WASHINGTON, DC 20036

EXAMINER
LOONAN, ERIC T

ART UNIT	PAPER NUMBER
2189	

MAIL DATE	DELIVERY MODE
12/22/2009	PAPER

Please find below and/or attached an Office communication concerning this application or proceeding.

The time period for reply, if any, is set in the attached communication.

UNITED STATES PATENT AND TRADEMARK OFFICE

Commissioner for Patents
United States Patent and Trademark Office
P.O. Box 1450
Alexandria, VA 22313-1450
www.uspto.gov

RADER FISHMAN & GRAUER PLLC
LION BUILDING
1233 20TH STREET N.W., SUITE 501
WASHINGTON, DC 20036

In re Application of: Kanagawa Toshiyuki Nishihara, et al.
Application No. 11/582,459
Filed: October 18, 2006
Attorney Docket Number: SON-3630
FOR: STORAGE DEVICE, COMPUTER SYSTEM, AND DATA WRITING METHOD

DECISION ON PETITION TO WITHDRAW THE FINALITY OF AN OFFICE ACTION

This paper provides the decision on the petition filed October 28, 2009 under 37 C.F.R. § 1.181 requesting withdrawal of the finality of the office action dated October 15, 2009.

The Petition is **GRANTED.**

Applicable Prosecution History

October 18, 2006	Original Application filed.
October, 06 2008	Examiner issued a FAOM (non-final Office action), rejecting claims 1 and 13 as being anticipated by Madter (US PGPUB 2004/0268049) and claims 2-6, 8-12, and 14-16 as obvious over Madter in view of Applicant's admitted prior art.
January 06, 2009	Applicant filed a response to the non-final rejection above, including amending claim 1 to incorporate dependent claim 2. The Applicant further canceled claim 13 and fixed the dependency of claims 3, 6, 7, 8, and 9 to depend on claim 1 instead of claim 2.
July 07, 2009	Examiner mailed final action. Claims 1, 3, 5-6, 8-9, 11-12, and 14 were rejected under 35 USC 103(a) as being not patentable over Madter (US PGPUB 2004/0268049) in view applicants admitted prior art. The Examiner

	also indicated that dependent claims 4, 10, 15 and 16 would be allowable if rewritten in independent form.
September 03, 2009	Applicant filed a response to the final rejection mailed July 07, 2009 above, requesting reconsideration of the claims. Applicant did not further amend any of the claims.
October 15, 2009	Examiner withdrew the finality of the office action mailed on July 07, 2009, and mailed a (new) final rejection. This final included rejected claims 1, 3, 5-6, 8-9, 11-12, and 14 under 35 USC 103(a) as being not patentable over Madter (US PGPUB 2004/0268049) in view Radjy (US 5191556). Radjy was a brand new reference and the examiner cited the reference in form PTO-892.
October 28, 2009	Instant petition filed, requesting withdrawal of finality of office action mailed on October 15, 2009.

RELIEF REQUESTED

The Applicant respectfully that the finality of the office action mailed on October 15, 2009 be withdrawn.

RULES AND PROCEDURE

MPEP 706.07 sets forth that the examiner should never lose sight of the fact that in every case the applicant is entitled to a fair and full hearing, and that a clear issue between applicant and examiner should be developed, if possible, before appeal; and that in making the final rejection, they [the grounds of rejection] must be clearly developed to such an extent that applicant may readily judge the advisability of appeal unless a single previous Office action contains a complete statement supporting the rejection.

706.07(a) [R-6] Final Rejection, When Proper on Second Action

.....

Under present practice, second or any subsequent actions on the merits shall be final, except where the examiner introduces a new ground of rejection that is neither necessitated by applicant's amendment of the claims, nor based on information submitted in an information disclosure statement filed during the period set forth in 37 CFR 1.97(c) with the fee set forth in 37 CFR 1.17(p).

MPEP 707.07(f) [R-3] Answer All Material Traversed, states in part:
In order to provide a complete application file history and to enhance the clarity of the prosecution history record, an examiner must provide clear explanations of all actions taken by the examiner during prosecution of an application.....
Where the applicant traverses any rejection, the examiner should, if he or she repeats the rejection, take note of the applicant's argument and answer the substance of it.

DECISION

Petitioner contends that the new grounds of rejection of claims 1, 3, 5-6, 8-9, 11-12, and 14 under 35 USC 103(a) as being not patentable over Madter (US PGPUB 2004/0268049) in view Radjy (US 5191556), was not necessitated by amendments made by applicants. Petitioner asserts that the grounds of rejection in the Final Office Action dated October 15, 2009 are new grounds of rejection, and they cannot possibly have been necessitated by Applicant's amendment, as no amendment had been made for claims 1, 3, 5-6, 8-9, 11-12 and 14.

A review of the file record indicates that the new grounds of rejection of claims 1, 3, 5-6, 8-9, 11-12, and 14 under 35 USC 103(a) as being not patentable over Madter (US PGPUB 2004/0268049) in view Radjy (US 5191556) was not necessitated by the response filed September 03, 2009. Furthermore, Applicant's response filed January 06, 2009 could not have necessitated a new rejection, because the Applicant incorporated claim 2 into claim 1, but did not change the scope of the claims. Thus, it is improper under current Office practice to make the Office action mailed on October 15, 2009, final as provided for under MPEP ' 706.07(a).

For the above stated reasons, the petition is **GRANTED.** The finality of Office action mailed on October 15, 2009 is hereby withdrawn and the office action is changed to non-final Office action. Any subsequent Applicant's response will be treated as a response to the non-final Office action, and the case forwarded to examiner for further action.

Nestor Ramirez, Director
Technology Center 2100
Computer Architecture, Software, and Information Security

NRR:mp

UNITED STATES PATENT AND TRADEMARK OFFICE

Commissioner for Patents
United States Patent and Trademark Office
P.O. Box 1450
Alexandria, VA 22313-1450
www.uspto.gov

STEIN MCEWEN, LLP
1400 EYE STREET, NW
SUITE 300
WASHINGTON DC 20005

MAILED

JUN 22 2009

OFFICE OF PETITIONS

In re Application of	:	
Jin-Seong Park, et al.	:	
Application No. 11/582,467	:	DECISION GRANTING PETITION
Filed: October 18, 2006	:	UNDER 37 CFR 1.313(c)(2)
Attorney Docket No. 0096.1041	:	

This is a decision on the petition under 37 CFR 1.313(c)(2), filed June 19, 2009, to withdraw the above-identified application from issue after payment of the issue fee.

The petition is **GRANTED**.

The above-identified application is withdrawn from issue for consideration of a submission under 37 CFR 1.114 (request for continued examination). *See* 37 CFR 1.313(c)(2).

Petitioner is advised that the issue fee paid on June 4, 2009 cannot be refunded. If, however, this application is again allowed, petitioner may request that it be applied towards the issue fee required by the new Notice of Allowance.[1]

Telephone inquiries should be directed to Terri Williams at (571) 272-2991.

This application is being referred to Technology Center AU 2822 for processing of the request for continued examination under 37 CFR 1.114 and for consideration of the concurrently filed information disclosure statement.

Terri Williams
Petitions Examiner
Office of Petitions

---

[1] *The request to apply the issue fee to the new Notice may be satisfied by completing and returning the new Part B – Fee(s) Transmittal Form (along with any balance due at the time of submission). Petitioner is advised that the Issue Fee Transmittal Form* ***must*** *be completed and timely submitted to avoid abandonment of the application.*

UNITED STATES PATENT AND TRADEMARK OFFICE

Commissioner for Patents
United States Patent and Trademark Office
P.O. Box 1450
Alexandria, VA 22313-1450
www.uspto.gov

STEIN MCEWEN, LLP
1400 EYE STREET, NW
SUITE 300
WASHINGTON DC 20005

MAILED

APR 28 2010

OFFICE OF PETITIONS

In re Application of	:	
Jin-Seong Park, et al.	:	
Application No. 11/582,467	:	DECISION GRANTING PETITION
Filed: October 18, 2006	:	UNDER 37 CFR 1.313(c)(2)
Attorney Docket No. 0096.1041	:	

This is a decision on the petition under 37 CFR 1.313(c)(2), filed, April 27, 2010 to withdraw the above-identified application from issue after payment of the issue fee.

The petition is **GRANTED**.

The above-identified application is withdrawn from issue for consideration of a submission under 37 CFR 1.114 (request for continued examination). *See* 37 CFR 1.313(c)(2).

Petitioner is advised that the issue fee paid on March 2, 2010 cannot be refunded. If, however, this application is again allowed, petitioner may request that it be applied towards the issue fee required by the new Notice of Allowance.[1]

Telephone inquiries should be directed to Terri Johnson at (571) 272-2991.

This application is being referred to Technology Center AU 2822 for processing of the request for continued examination under 37 CFR 1.114 and for consideration of the concurrently filed information disclosure statement.

Terri Johnson

Terri Johnson
Petitions Examiner
Office of Petitions

---

[1] *The request to apply the issue fee to the new Notice may be satisfied by completing and returning the new Part B – Fee(s) Transmittal Form (along with any balance due at the time of submission). Petitioner is advised that the Issue Fee Transmittal Form must be completed and timely submitted to avoid abandonment of the application.*

UNITED STATES PATENT AND TRADEMARK OFFICE

UNITED STATES DEPARTMENT OF COMMERCE
United States Patent and Trademark Office
Address: COMMISSIONER FOR PATENTS
P.O. Box 1450
Alexandria, Virginia 22313-1450
www.uspto.gov

APPLICATION NO.	FILING DATE	FIRST NAMED INVENTOR	ATTORNEY DOCKET NO.	CONFIRMATION NO.
11/582,481	10/18/2006	Hee-moon Jeong	Q95977	1709

7590 07/17/2009
SUGHRUE MION, PLLC
2100 PENNSYLVANIA AVENUE, N.W.
SUITE 800
WASHINGTON, DC 20037

EXAMINER
DIAZ, JOSE R

ART UNIT	PAPER NUMBER
2815	

MAIL DATE	DELIVERY MODE
07/17/2009	PAPER

DECISION GRANTING PETITION UNDER 37 CFR 1.138(d)

The declaration of express abandonment is recognized

This is in response to the petition under 37 CFR 1.138(d), requesting for a refund of any previously paid search fee and excess claims fee in the above-identified application.

The petition is granted.

The express abandonment is recognized. Any previously paid search fee and excess claims fee are hereby refunded.

Telephone inquiries should be directed to the Office of Data Management at (571) 272-4200.

Nioni Farmer

Patent Publication Branch
Office of Data Management

Refund Ref:
07/17/2009 NFARMER 0000168053

CHECK Refund Total: $1000.00

Adjustment date: 07/17/2009 NFARMER
10/19/2006 SDENBOB1 00000028 11582481
02 FC:1111 -500.00 OP
04 FC:1202 -100.00 OP
05 FC:1201 -400.00 OP

FORM PET651G (Rev. 08/07)

UNITED STATES PATENT AND TRADEMARK OFFICE

UNITED STATES DEPARTMENT OF COMMERCE
United States Patent and Trademark Office
Address: COMMISSIONER FOR PATENTS
P.O. Box 1450
Alexandria, Virginia 22313-1450
www.uspto.gov

APPLICATION NO.	FILING DATE	FIRST NAMED INVENTOR	ATTORNEY DOCKET NO.	CONFIRMATION NO.
11/582,500	10/18/2006	June Moon	52650	9341

7590 12/16/2008

ROYLANCE, ABRAMS, BERDO & GOODMAN, L.L.P.
1300 19TH STREET, N.W.
SUITE 600
WASHINGTON,, DC 20036

EXAMINER
LOUIS JACQUES, JACQUES H

ART UNIT	PAPER NUMBER
2112	

MAIL DATE	DELIVERY MODE
12/16/2008	PAPER

DECISION GRANTING PETITION UNDER 37 CFR 1.138(d)

The declaration of express abandonment is recognized

This is in response to the petition under 37 CFR 1.138(d), requesting for a refund of any previously paid search fee and excess claims fee in the above-identified application.

The petition is granted.

The express abandonment is recognized. Any previously paid search fee and excess claims fee are hereby refunded.

Telephone inquiries should be directed to the Office of Data Management at (571) 272-4200.

Betty Powell

Patent Publication Branch
Office of Data Management

```
Adjustment date: 12/18/2008  BPOWELL
10/19/2006 JBALINAN 00000062 11582500
02 FC:1111                    -500.00 OP
04 FC:1201                   -1200.00 OP
05 FC:1202                    -750.00 OP
```

```
Refund Ref:
12/18/2008          0030064765
-----------------------------------------

Credit Card Refund Total:      $1700.00

Am Exp..: XXXXXXXXXXX1001
```


FORM PET651G (Rev. 08/07)

UNITED STATES PATENT AND TRADEMARK OFFICE

Commissioner for Patents
United States Patent and Trademark Office
P.O. Box 1450
Alexandria, VA 22313-1450
www.uspto.gov

CHOATE, HALL & STEWART/HARVARD UNIVERSITY
Two International Place
Boston, MA 02110

MAILED

JUL 0 8 2009

OFFICE OF PETITIONS

In re Application of	:	
Andrew G. Myers, et al.	:	
Application No. 11/582,526	:	DECISION ON PETITION
Filed: October 17, 2006	:	TO WITHDRAW
Attorney Docket No. 0342941-0174 (HU 1747	:	FROM RECORD
	:	

This is a decision on the Request to Withdraw as attorney or agent of record under 37 C.F.R. § 1.36(b), filed June 9, 2009.

The request is **APPROVED**.

A grantable request to withdraw as attorney/agent of record must be signed by every attorney/agent seeking to withdraw or contain a clear indication that one attorney is signing on behalf of another/others. A request to withdraw will not be approved unless at least 30 (thirty) days would remain between the date of approval and the later of the expiration date of a time to file a response or the expiration date of the maximum time period which can be extended under 37 C.F.R. § 1.136(a).

The request was signed by Brenda Jarell on behalf of all attorneys of record. All attorneys/agents have been withdrawn. Applicant is reminded that there is no attorney of record at this time.

All future correspondence will be directed to the first named inventor Andrew G. Myers at the address indicated below.

The application became abandoned for failure to timely respond to the Office action mailed October 14, 2008.

Telephone inquiries concerning this decision should be directed to Terri Williams at 571-272-2991.

Terri Williams
Petitions Examiner
Office of Petitions

cc: **Andrew G. Myers**
41 Braddock Park, #2
Boston, MA 02116

UNITED STATES PATENT AND TRADEMARK OFFICE

UNITED STATES DEPARTMENT OF COMMERCE
United States Patent and Trademark Office
Address: COMMISSIONER FOR PATENTS
P.O. Box 1450
Alexandria, Virginia 22313-1450
www.uspto.gov

APPLICATION NUMBER	FILING OR 371(C) DATE	FIRST NAMED APPLICANT	ATTY. DOCKET NO./TITLE
11/582,526	10/17/2006	Andrew G. Myers	0342941-0174 (HU 1747

CONFIRMATION NO. 8706

POWER OF ATTORNEY NOTICE

58374
CHOATE, HALL & STEWART/HARVARD UNIVERSITY
TWO INTERNATIONAL PLACE
BOSTON, MA 02110

OC000000036822205

Date Mailed: 07/07/2009

NOTICE REGARDING CHANGE OF POWER OF ATTORNEY

This is in response to the Power of Attorney filed 06/09/2009.

- The withdrawal as attorney in this application has been accepted. Future correspondence will be mailed to the new address of record. 37 CFR 1.33.

/tswilliams/

Office of Data Management, Application Assistance Unit (571) 272-4000, or (571) 272-4200, or 1-888-786-0101

UNITED STATES PATENT AND TRADEMARK OFFICE

COMMISSIONER FOR PATENTS
UNITED STATES PATENT AND TRADEMARK OFFICE
P.O. BOX 1450
ALEXANDRIA, VA 22313-1450
www.uspto.gov

COPY MAILED

JAN 11 2007

OFFICE OF PETITIONS

BAKER & MCKENZIE LLP
1114 AVENUE OF THE AMERICAS
NEW YORK NY 10036

In re Application of :
Diedrich Betterman, et al. :
Application No. 11/582,529 : DECISION GRANTING PETITION
Filed: October 17, 2006 :
Atty Docket No. 56183774-129 :

This is a decision on the petition filed January 8, 2007, requesting that the above-identified application be accorded a filing date of October 17, 2006, instead of the presently accorded date of October 18, 2006.

Petitioner alleges that the application was deposited in "Express Mail" Service with the U. S. Postal Service (USPS) on October 17, 2006. In support, petitioner provides, *inter alia*, a copy of the "Express Mail" mailing label receipt No. ER 322816964 US showing a "date in" of October 17, 2006 . The same Express Mail receipt number was referred to in the original application transmittal letter found in the file.

The Office considers the date the paper or fee is shown to have been deposited as "Express Mail" to be the "Date In" on the Express Mail label, MPEP 513. That is the date that verifies that the package was actually mailed. The evidence is convincing that the application was deposited as "Express Mail" with the USPS on October 17, 2006.

The petition is granted.

The application is being referred to the Office of Initial Patent Examination (OIPE) for correction of the filing date to **October 17, 2006**.

Telephone inquires related to this decision may be directed to the undersigned at (571) 272-3204. Telephone inquiries related to OIPE processing should be directed to their hotline at (571) 272-4000.

Sherry D. Brinkley
Petitions Examiner
Office of Petitions

UNITED STATES PATENT AND TRADEMARK OFFICE

Commissioner for Patents
United States Patent and Trademark Office
P.O. Box 1450
Alexandria, VA 22313-1450
www.uspto.gov

MAILED

MAR 22 2010

OFFICE OF PETITIONS

ARENT FOX LLP
1050 CONNECTICUT AVENUE, N.W.
SUITE 400
WASHINGTON DC 20036

In re Application of	:	
Joaquin A. Lubkowitz, et al	:	
Application No. 11/582,558	:	ON PETITION
Filed: October 18, 2006	:	
Attorney Docket No. 026562-00005	:	

This is to notify petitioner that the petition under 37 CFR 1.313(c)(2), filed by facsimile transmission on March 19, 2010, to withdraw the above-identified application from issue after payment of the issue fee, was **dismissed as moot** as of March 31, 2009, the date upon which the above-identified application issued as U.S. Patent No. 7,509,837.[1]

Petitioner's attention is directed to 37 CFR 1.313(d) which states that "A petition under this section [37 CFR 1.313(c)] will not be effective to withdraw the application from issue **unless it is actually received and granted by the appropriate officials before the date of issue**" (emphasis in bold). In this instance, the March 19, 2010 petition was not received by the appropriate official until after the date of issuance of U.S. Patent No. 7,509,837 on March 31, 2009. See also MPEP 1308, which states, in pertinent part:

> "**The Office cannot ensure that any petition under 37 CFR 1.313(c)** [filed after payment of the issue fee] **will be acted upon prior to the date of patent grant.** See *Filing of Continuing Applications, Amendments, or Petitions after Payment of Issue Fee*, Notice, 1221 Off. Gaz. Pat. Office 14 (April 6, 1999) . . . **applicants are strongly cautioned to file any desired RCE prior to payment of issue fee.** In addition, **applicants considering filing a RCE after payment of the issue fee are strongly cautioned to call the Office of Petitions to determine whether sufficient time remains** before the patent issue date to consider (and grant) a petition under 37 CFR 1.313(c) and what steps are needed to ensure that a grantable petition under 37 CFR 1.313(c) is before an appropriate official in the Office of Petitions in sufficient time to grant the petition before the patent is issued" (emphasis in bold).

[1] The jurisdiction of the Office over an application ends once the application issues as a patent.

While petitions to withdraw from issue may be faxed to the Centralized Facsimile Number, as was done in this case, applicants were cautioned to hand carry petitions to withdraw from issue directly to the Office of Petitions to allow sufficient time to process the petition. (See *Centralized Delivery and Facsimile Transmission Requirements for Patent Application Related Correspondence, 1275 Off. Gaz. Pat. Office 200* (Oct. 28, 2003)).

Because the March 19, 2010 petition under 37 CFR 1.313(c) to withdraw from issue was not granted, the Request for Continued Examination (RCE) filed on March 19, 2010, is considered an improper submission under 37 CFR 1.114. Accordingly, the RCE and accompanying Information Disclosure Statement (IDS) will remain in the file of the above-identified patent without further consideration.

No fees, in regard to papers filed on March 19, 2010, were charged to counsel's credit card, nor are any due.

Telephone inquiries concerning this matter may be directed to the undersigned at (571) 272-3204.

/SDB/

Sherry D. Brinkley
Petitions Examiner
Office of Petitions

UNITED STATES PATENT AND TRADEMARK OFFICE

Commissioner for Patents
United States Patent and Trademark Office
P.O. Box 1450
Alexandria, VA 22313-1450
www.uspto.gov

OFFICE OF THE STAFF JUDGE ADVOCATE
U.S. ARMY MEDICAL RESEARCH AND MATERIEL COMMAND
ATTN: MCMR-JA (MS. ELIZABETH ARWINE
504 SCOTT STREET
FORT DETRICK MD 21702-5012

COPY MAILED
DEC 10 2008

In re Application of	:	
Kai P. Leung	:	
Application No. 11/582,561	:	DECISION ON PETITION
Filed: October 18, 2006	:	
Attorney Docket No. WRAIR 06-02 22	:	

This is a decision on the petition under the unintentional provisions of 37 CFR 1.137(b), filed November 7, 2008, to revive the above-identified application.

The petition is **GRANTED**.

The application became abandoned for failure to reply in a timely manner to the Restriction Requirement mailed February 25, 2008, which set a shortened statutory period for reply of one (1) month or thirty (30) days (whichever is later). No extensions of time under the provisions of 37 CFR 1.136(a) were obtained. Accordingly, the application became abandoned on March 26, 2008. A Notice of Abandonment was mailed October 21, 2008.

The petition satisfies the requirements of 37 CFR 1.137(b) in that petitioner has supplied (1) the reply in the form of a response to the Restriction Requirement, (2) the petition fee of $1,620.00 and (3) a proper statement of unintentional delay.

Additionally, the address given on the petition differs from the address of record. A courtesy copy of this decision is being mailed to the address given on the petition; however, the Office will mail all future correspondence solely to the address of record.

Telephone inquiries concerning this decision should be directed to Joan Olszewski at (571)272-7751.

This application is being referred to Technology Center AU 1654 for appropriate action by the Examiner in the normal course of business on the reply received.

/Liana Walsh/
Liana Walsh
Petitions Examiner
Office of Petitions

cc: William E. Bradley
1100 17th Street N.W., Ste. 401
Washington DC 20036

OIPE IAP40
AUG 3 1 2009
PATENT & TRADEMARK OFFICE

IFW

IN THE UNITED STATES PATENT AND TRADEMARK OFFICE

Applicant(s): Kai P. Leung	Confirmation No.: 8991
Application No.: 11/582,561	
Filed: October 18, 2006	Art Unit: 1654
Title: Antimicrobial Decapeptide Oral Hygiene Treatment	
Attorney Docket No.: WRAIR 06-02 22	

PETITION TO ACCEPT COLOR DRAWINGS PURSUANT TO 37 CFR 1.84

Commissioner for Patents
P.O. Box 1450
Alexandria, VA 22313-1450

Sir:

In response to the objection to Figures 1, 8-11 in the above-identified application, Applicant submits herewith, and petitions for acceptance of, colored drawings. Applicant submits that in view of the Examiner's objection, a color image is the only practical medium by which to disclose the contents of Figures 1 and 8-11.

Pursuant to 37 CFR 1.84(a)(2), three sets of drawings are enclosed herewith, an amendment to the specification to recite the language of 37 CFR 1.84(a)(2)(iii) is being submitted concurrently herewith in an electronically filed response to the outstanding office action, and the fee set forth in § 1.17(h) is authorized to be charged to Applicant's Deposit Account Number 21-0380.

Grant of this Petition is respectfully requested. If any points remain in issue which the Examiner feels may be best resolved through a personal or telephone interview, the Examiner is kindly requested to contact the undersigned at the telephone number listed below.

Approved 12/1/09

08/31/2009 MBELETE1 00000027 210380 11582561
01 FC:1464 130.00 DA

Respectfully submitted,
CAHN & SAMUELS, L.L.P.

UNITED STATES PATENT AND TRADEMARK OFFICE

UNITED STATES DEPARTMENT OF COMMERCE
United States Patent and Trademark Office
Address: COMMISSIONER FOR PATENTS
P.O. Box 1450
Alexandria, Virginia 22313-1450
www.uspto.gov

APPLICATION NO.	FILING DATE	FIRST NAMED INVENTOR	ATTORNEY DOCKET NO.	CONFIRMATION NO.
11/582,561	10/18/2006	Kai P. Leung	WRAIR 06-02 22	8991

27370 7590 12/18/2009
OFFICE OF THE STAFF JUDGE ADVOCATE
U.S. ARMY MEDICAL RESEARCH AND MATERIEL COMMAND
ATTN: MCMR-JA (MS. ELIZABETH ARWINE)
504 SCOTT STREET
FORT DETRICK, MD 21702-5012

EXAMINER
KOSAR, ANDREW D

ART UNIT	PAPER NUMBER
1654	

MAIL DATE	DELIVERY MODE
12/18/2009	PAPER

Please find below and/or attached an Office communication concerning this application or proceeding.

The time period for reply, if any, is set in the attached communication.

UNITED STATES PATENT AND TRADEMARK OFFICE

Commissioner for Patents
United States Patent and Trademark Office
P.O. Box 1450
Alexandria, VA 22313-1450
www.uspto.gov

In re Application of: Leung, Kaip	:	
Serial Number: 11/582,561	:	
Filed: October 18, 2006	:	
Attorney Docket: WRAIR 06-02 22	:	DECISION ON PETITION
For: Antimicrobial Decapeptide Oral	:	
Hygiene Tretament	:	

This is in response to applicant's petition to accept color drawings/photographs filed on August 31, 2009.

All requirements under 37 CFR 1.84(a)(2) are met. Accordingly, petition is Granted.

Petition GRANTED.

/Cecilia J.Tsang/
Supervisory Patent Examiner, Art nit 1654

UNITED STATES PATENT AND TRADEMARK OFFICE

COMMISSIONER FOR PATENTS
UNITED STATES PATENT AND TRADEMARK OFFICE
P.O. BOX 1450
ALEXANDRIA, VA 22313-1450
www.uspto.gov

Paper No.

WRB-IP LLP
1217 KING STREET
ALEXANDRIA VA 22314

COPY MAILED

AUG 29 2007

OFFICE OF PETITIONS

In re Application of	:	
William Northup and James Fusco	:	DECISION REFUSING STATUS
Application No. 11/582,562	:	UNDER 37 CFR 1.47(a)
Filed: October 18, 2006	:	
Attorney Docket No. 000610-001	:	

This is a decision on the "PETITION UNDER 37 C.F.R. 1.47," filed March 7, 2007.

The petition is **DISMISSED**.

Rule 47 applicant is given **TWO MONTHS** from the mailing date of this decision to reply, correcting the below-noted deficiencies. Any reply should be entitled "Request for Reconsideration of Petition Under 37 C.F.R. §1.47(a)," and should only address the deficiencies noted below, except that the reply may include an oath or declaration executed by the non-signing inventor. Failure to respond will result in abandonment of the application. Any extensions of time will be governed by 37 C.F.R. § 1.136(a).

The above-identified application was filed on October 18, 2006, without an oath or declaration. Accordingly, on November 7, 2006, applicants were mailed a "Notice to File Missing Parts of Nonprovisional Application," requiring submission of an executed oath or declaration and payment of the surcharge for late filing under § 1.16(e). This Notice set a two-month period for reply, with extensions of time obtainable under § 1.136(a).

In response, rule 47 applicants timely filed the instant petition, along with payment of the petition fee and of the late surcharge; and a declaration executed by joint inventor James

Fusco on behalf of himself and on behalf of non-signing inventor William Northup. On petition, applicants assert that status under § 1.47(a) is proper because after diligent effort inventor Northup could not be reached for execution of the Declaration.

A grantable petition under 37 C.F.R. § 1.47(a) requires: (1) proof that the non-signing inventor cannot be reached or found, after diligent effort, or refuses to sign the oath or declaration after having been presented with the application papers (specification, claims and drawings); (2) an acceptable oath or declaration in compliance with 35 U.S.C. §§115 and 116; (3) the petition fee; and (4) a statement of the last known address of the non-signing inventor. The instant petition does not satisfy requirement (1).

The petition includes an acceptable declaration, payment of the petition fee and states a last known address for non-signing inventor Northup.

However, rule 47 applicants have not submitted adequate proof that inventor Northup could not be reached or found after diligent effort. The efforts set forth have been considered, but not found to support a conclusion that a diligent effort to reach or find inventor Northup has been undertaken. There is no indication in the evidence presented that reasonable efforts were undertaken to determine an address for the inventor to which mail would be deliverable. Petitioner does not indicate whether they utilized resources such as forwarding services of their postal service or such as the Internet to locate the inventor. If further attempts to obtain a forwarding address or to locate the non-signing inventor by other means such as through a working E-mail address, directory assistance, or the Internet continue to fail, then applicants will have provided the necessary proof required under 37 CFR § 1.47 that the inventor cannot be reached. Details of the efforts to reach or locate the non-signing inventor should be set forth in an affidavit or declaration of facts by a person with first hand knowledge of the details. Applicants should also submit documentary evidence such as the results of any E-mail or Internet searches. The Internet searches must be reasonably calculated to ascertain a current address at which to reach the inventor and attempts must be undertaken to reach the inventor at any reasonable address ascertained.

Further correspondence with respect to this matter should be addressed as follows:

By mail: Mail Stop Petition
Commissioner for Patents
P.O. Box 1450
Alexandria, VA 22313-1450

By FAX: (571) 273-8300
Attn: Office of Petitions
ATTN: NANCY JOHNSON

By hand: Customer Service Window
Randolph Building
401 Dulany Street
Alexandria, VA 22314

Telephone inquiries related to this decision may be directed to the undersigned at (571) 272-3219.

Nancy Johnson
Senior Petitions Attorney
Office of Petitions

UNITED STATES PATENT AND TRADEMARK OFFICE

COMMISSIONER FOR PATENTS
UNITED STATES PATENT AND TRADEMARK OFFICE
P.O. BOX 1450
ALEXANDRIA, VA 22313-1450
www.uspto.gov

Paper No.

WRB-IP LLP
1217 KING STREET
ALEXANDRIA VA 22314

COPY MAILED
NOV 05 2007
OFFICE OF PETITIONS

In re Application of	:	
William Northup and James Fusco	:	DECISION NOTING JOINDER
Application No. 11/582,562	:	OF INVENTOR AND PETITION
Filed: October 18, 2006	:	UNDER 37 CFR 1.47(a) MOOT
Attorney Docket No. 000610-001	:	

This is in response to the RESPONSE to the Decision Refusing Status Under 37 CFR 1.47(a) dated August 29, 2007, filed October 29, 2007.

The petition is **DISMISSED AS MOOT**.

The above-identified application was filed on October 18, 2006, without an oath or declaration. In response to the "Notice to File Missing Parts of Nonprovisional Application" mailed November 7, 2006, on March 7, 2007, applicants filed the initial petition. By decision mailed August 29, 2007, the petition was dismissed for failure to submit adequate proof that the non-signing inventor cannot be reached or found, after diligent effort, or refuses to sign the oath or declaration after having been presented with the application papers (specification, claims and drawings).

On instant renewed petition, applicants have submitted a declaration executed by previously non-signing inventor Northup.

The declaration has been reviewed and found in compliance for purposes of this decision.

In view of the joinder of the inventor, further consideration under 37 CFR 1.47(a) is not necessary and the petition is

considered moot. This application does not have any Rule 1.47(a) status and no such status should appear on the file wrapper. This application need not be returned to this Office for further consideration under 37 CFR 1.47(a).

This application will be examined in due course.

Telephone inquiries related to this decision should be directed to the undersigned at (571) 272-3219.

Nancy Johnson
Senior Petitions Attorney
Office of Petitions

UNITED STATES PATENT AND TRADEMARK OFFICE

Commissioner for Patents
United States Patent and Trademark Office
P.O. Box 1450
Alexandria, VA 22313-1450
www.uspto.gov

CHRISTOPHER & WEISBERG, P.A.
200 EAST LAS OLAS BOULEVARD
SUITE 2040
FORT LAUDERDALE FL 33301

COPY MAILED
NOV 27 2006
OFFICE OF PETITIONS

In re Application of	:	
Bertram V. Burke	:	
Application No. 11/582,603	:	DECISION ON PETITION
Filed: October 18, 2006	:	TO MAKE SPECIAL UNDER
Attorney Docket No. 1357-13CON1	:	37 CFR 1.102(c)(1)
	:	

This is a decision on the petition under 37 CFR 1.102(c)(1), filed October 18, 2006, to make the above-identified application special based on applicant's age as set forth in M.P.E.P. § 708.02, Section IV.

The petition is **GRANTED**.

A grantable petition to make an application special under 37 CFR 1.102(c)(1) and MPEP § 708.02, Section IV: Applicant's Age must be accompanied by evidence showing that at least one of the applicants is 65 years of age, or more, such as a birth certificate or a statement by applicant. No fee is required

The instant petition includes a statement from the applicant declaring that he is 65 years of age or older. Accordingly, the above-identified application has been accorded "special" status.

Telephone inquiries concerning this decision should be directed to Terri Williams at 571-272-2991.

All other inquiries concerning either the examination or status of the application should be directed to the Technology Center.

The application is being forwarded to the Technology Center Art Unit 2876 for action on the merits commensurate with this decision.

Terri Williams

Terri Williams
Petitions Examiner
Office of Petitions

UNITED STATES PATENT AND TRADEMARK OFFICE

Commissioner for Patents
United States Patent and Trademark Office
P.O. Box 1450
Alexandria, VA 22313-1450
www.uspto.gov

FINNEGAN, HENDERSON, FARABOW,
GARRETT & DUNNER LLP
901 NEW YORK AVENUE, NW
WASHINGTON DC 20001-4413

COPY MAILED

AUG 28 2009

OFFICE OF PETITIONS

In re Application of	:	
Scott Edward Barry	:	DECISION ON PETITION
Application No. 11/582,614	:	TO WITHDRAW
Filed: October 17, 2006	:	FROM RECORD
Attorney Docket No. 9314.0052-00	:	

This is a decision on the Request to Withdraw as attorney or agent of record under 37 C.F.R. § 1.36(b), filed on August 11, 2009.

The request is **NOT APPROVED**.

The Request for Withdrawal as Attorney or Agent and Change of Correspondence Address submitted herein cannot be approved at this time since the Office no longer accepts address changes to a new practitioner or law firm filed with requests under 37 C.F.R. § 1.36(b).

The Office will only accept correspondence address changes to the most current address information provided for the assignee of the entire interest *who properly became of record under 37 CFR 3.71,* or, if no assignee of the entire interest has properly been made of record, the most current address information provided for the first named inventor. 37 CFR 3.71(c) states:

> *An assignee becomes of record either in a national patent application or a reexamination proceeding by filing a statement in compliance with § 3.73(b) that is signed by a party who is authorized to act on behalf of the assignee.*

All future communications from the Office will be directed to above-listed address until otherwise properly notified by the applicant or a proper change of correspondence address have been submitted.

There are no outstanding Office actions that require a reply from the applicant.

Telephone inquires concerning this decision should be directed to Alicia Kelley at (571) 272-6059. All other inquires concerning either the examination or status of the application should be directed to the Technology Center.

/Liana Walsh/
Liana Walsh
Petitions Examiner
Office of Petitions

UNITED STATES PATENT AND TRADEMARK OFFICE

Commissioner for Patents
United States Patent and Trademark Office
P.O. Box 1450
Alexandria, VA 22313-1450
www.uspto.gov

FINNEGAN, HENDERSON, FARABOW,
GARRETT & DUNNER LLP
901 NEW YORK AVENUE, NW
WASHINGTON DC 20001-4413

COPY MAILED

OCT 2 7 2009

OFFICE OF PETITIONS

In re Application of	:	
Scott Edward Barry	:	DECISION ON PETITION
Application No. 11/582,614	:	TO WITHDRAW
Filed: October 17, 2006	:	FROM RECORD
Attorney Docket No. 9314.0052-00	:	

This is a decision on the renewed Request to Withdraw as attorney or agent of record under 37 C.F.R. § 1.36(b), filed on September 28, 2009.

The request is **NOT APPROVED**.

The Request for Withdrawal as Attorney or Agent and Change of Correspondence Address submitted herein still cannot be approved since the Office no longer accepts address changes to a new practitioner or law firm filed with requests under 37 C.F.R. § 1.36(b).

Petitioner should note that the Office will only accept correspondence address changes to the most current address information provided the assignee of the entire interest *who properly became of record under 37 CFR 3.71*, **or**, if no assignee of the entire interest has properly been made of record, the most current address information provided for the first named inventor. 37 CFR 3.71(c) states:

> *An assignee becomes of record either in a national patent application or a reexamination proceeding by filing a statement in compliance with § 3.73(b) that is signed by a party who is authorized to act on behalf of the assignee.*

All future communications from the Office will be directed to above-listed address until otherwise properly notified by the applicant or a proper change of correspondence address have been submitted.

There are no outstanding Office actions that require a reply from the applicant.

Telephone inquires concerning this decision should be directed to the undersigned at (571) 272-6059. All other inquires concerning either the examination or status of the application should be directed to the Technology Center.

A. Kelley

Alicia Kelley
Petitions Examiner
Office of Petitions

UNITED STATES PATENT AND TRADEMARK OFFICE

Commissioner for Patents
United States Patent and Trademark Office
P.O. Box 1450
Alexandria, VA 22313-1450
www.uspto.gov

Stephen J. Kirchanski
Venable, LLP
2046 Century Park East
Suite 2100
Los Angeles, CA 90067

COPY MAILED

APR 0 6 2009

OFFICE OF PETITIONS

In re Application of	:	
Leanna Sterios	:	
Application No. 11/582,633	:	DECISION ON PETITION
Filed: October 17, 2006	:	TO WITHDRAW
Attorney Docket No. 81108.243860	:	FROM RECORD
	:	

This is a decision on the Request to Withdraw as attorney or agent of record under 37 C.F.R. § 1.36(b), filed March 17, 2009.

The request is **APPROVED**.

A grantable request to withdraw as attorney/agent of record must be signed by every attorney/agent seeking to withdraw or contain a clear indication that one attorney is signing on behalf of another/others. A request to withdraw will not be approved unless at least 30 (thirty) days would remain between the date of approval and the later of the expiration date of a time to file a response or the expiration date of the maximum time period which can be extended under 37 C.F.R. § 1.136(a).

The request was signed by Stefan J. Kirchanski on behalf of all attorneys/agents of record. All attorneys/agents of record have been withdrawn.

Applicant is reminded that there is no attorney of record at this time.

The correspondence address has been changed. All future correspondence will be mailed to the address of the inventor.

Telephone inquiries concerning this decision should be directed to Kimberly Inabinet at 571-272-4618.

Kimberly Inabinet
Petitions Examiner
Office of Petitions

cc: Leanna Sterios-Primiani
514 Alta Avenue
Santa Monica, CA 90402-2716

UNITED STATES PATENT AND TRADEMARK OFFICE

UNITED STATES DEPARTMENT OF COMMERCE
United States Patent and Trademark Office
Address: COMMISSIONER FOR PATENTS
P.O. Box 1450
Alexandria, Virginia 22313-1450
www.uspto.gov

APPLICATION NUMBER	FILING OR 371(C) DATE	FIRST NAMED APPLICANT	ATTY. DOCKET NO./TITLE
11/582,633	10/17/2006	Leanna Sterios	100850.0001US2

CONFIRMATION NO. 1606

POWER OF ATTORNEY NOTICE

OC000000035341807

Stefan J. Kirchanski
Venable, LLP
2046 Century Park East
Suite 2100
Los Angeles, CA 90067

Date Mailed: 04/06/2009

NOTICE REGARDING CHANGE OF POWER OF ATTORNEY

This is in response to the Power of Attorney filed 03/17/2009.

- The withdrawal as attorney in this application has been accepted. Future correspondence will be mailed to the new address of record. 37 CFR 1.33.

/kainabinet/

Office of Data Management, Application Assistance Unit (571) 272-4000, or (571) 272-4200, or 1-888-786-0101

UNITED STATES PATENT AND TRADEMARK OFFICE

Commissioner for Patents
United States Patent and Trademark Office
P.O. Box 1450
Alexandria, VA 22313-1450
www.uspto.gov

COPY MAILED

OCT 23 2008

OFFICE OF PETITIONS

BUCHANAN, INGERSOLL & ROONEY LLP
P.O. BOX 1404
ALEXANDRIA, VA 22313-1404

In re Application of	:	
Balamuralikrishna Ambati, et al.	:	
Application No. 11/582,662	:	DECISION ON PETITION
Filed: October 17, 2006	:	TO WITHDRAW
Attorney Docket No. 1028750-000280	:	FROM RECORD
	:	

This is a decision on the Request to Withdraw as attorney or agent of record under 37 C.F.R. § 1.36(b), filed March 11, 2008.

The request is **DISMISSED** as moot.

A review of the file record indicates that the power of attorney to Buchanan, Ingersoll & Rooney, LLP has been revoked by the assignee of the patent application on April 23, 2007. Accordingly, the request to withdraw under 37 C.F.R. § 1.36(b) is moot.

All future communications from the Office will continue to be directed to the below-listed address until otherwise notified by applicant.

Telephone inquires concerning this decision should be directed to undersigned at 571-272- 1642.

/April M. Wise/
April M. Wise
Petitions Examiner
Office of Petitions

cc: TERESA STANEK REA
CROWELL & MORING, LLP
1001 PENNSYLVANIA AVENUE, NW
WASHINGTON, DC 20004

UNITED STATES PATENT AND TRADEMARK OFFICE

Commissioner for Patents
United States Patent and Trademark Office
P.O. Box 1450
Alexandria, VA 22313-1450
www.uspto.gov

Law Offices of Kenneth W. Float
2095 Hwy. 211 NW, #2F
Braselton GA 30517

COPY MAILED

MAY 07 2009

OFFICE OF PETITIONS

In re Application of

O'Brien, et al.

Application No. 11/582,669

Filed: October 18, 2006

Attorney Docket No. 026-40

DECISION ON PETITION

This is a decision on the petition to withdraw the holding of abandonment under 37 CFR 1.181(a), filed April 6, 2009.

The petition is **dismissed**.

This application was held abandoned March 4, 2009, after no reply was received to the Notice of Allowance and Issue Fee Due mailed December 3, 2008. The notice set forth a statutory period of reply of three months from its mailing date. No response was received within the allowable period and the application became abandoned on March 4, 2009. A Notice of Abandonment was mailed March 31, 2009. The instant petition was filed on April 6, 2009. Petitioner maintains that the notice of December 3, 2008, was not received.

When, as in this case petitioner is arguing that an Office communication was not received, petitioner must establish non-receipt of the Office communication in accordance with section 711.03(c) of the *Manual of Patent Examining Procedure* that requires the following:

> To minimize costs and burdens to practitioners and the Office, the Office has modified the showing required to establish nonreceipt of an Office action. The showing required to establish nonreceipt of an Office communication must include a statement from the practitioner **>describing the system used for recording an Office action received at the correspondence address of record with the USPTO. The statement should establish that the docketing system is sufficiently reliable. It is expected that the record would include, but not be limited to, the application number, attorney docket number, the mail date of the Office action and the due date for the response.
>
> Practitioner must state that the Office action was not received at the correspondence address of record, and that a search of the practitioner's record(s), including any file jacket or the equivalent, and the application contents, indicates that the Office action was not received. A copy of the record(s) used by the practitioner where the non-received Office action would have been entered had it been received is required.

> A copy of the practitioner's record(s) required to show non-receipt of the Office action should include the master docket for the firm. That is, if a three month period for reply was set in the nonreceived Office action, a copy of the master docket report showing all replies docketed for a date three months from the mail date of the nonreceived Office action must be submitted as documentary proof of nonreceipt of the Office action. If no such master docket exists, the practitioner should so state and provide other evidence such as, but not limited to, the following: the application file jacket; incoming mail log; calendar; reminder system; or the individual docket record for the application in question.<

Petitioner has not made the evidentiary showing specified above. Petitioner has not provided a copy of the master docket for the firm, but has only provided the docket for this specific application. Petitioner has also not indicated that a master docket for the firm does not exist. The petition is dismissed accordingly. The renewed petition must be accompanied by a copy of the firm's master docket record for the relevant period or a statement indicating that no such master docket for the firm exists.

Alternatively, petitioner may revive the application based on unintentional abandonment under 37 CFR 1.137(b). A grantable petition pursuant to 37 CFR 1.137(b) must be accompanied by the required reply, the required petition fee ($1,620.00 for a large entity and $810.00 for a verified small entity), and a statement that the **entire** delay in filing the required reply from the due date for the reply until the filing of a grantable petition pursuant to 37 CFR 1.137(b) was unintentional.

Further correspondence with respect to this matter should be addressed as follows:

By mail: Commissioner for Patents
United States Patent and Trademark Office
Box 1450
Alexandria, VA 22313-1450

By facsimile: (571) 273-8300
Attn: Office of Petitions

Telephone inquiries concerning this decision should be directed to the undersigned (571) 272-3222.

Kenya A. McLaughlin
Petitions Attorney
Office of Petitions

UNITED STATES PATENT AND TRADEMARK OFFICE

Commissioner for Patents
United States Patent and Trademark Office
P.O. Box 1450
Alexandria, VA 22313-1450
www.uspto.gov

Ballard Spahr LLP
SUITE 1000
999 PEACHTREE STREET
ATLANTA GA 30309-3915

COPY MAILED
MAR 01 2010

In re Application of

O'Brien, et al.

Application No. 11/582,669

Filed: October 18, 2006

Attorney Docket No. 026-40

DECISION ON PETITION

This is in response to the petition under 37 CFR 1.137(b) filed February 9, 2010.

The petition is DISMISSED.

Any request for reconsideration of this decision must be submitted within TWO (2) MONTHS from the mail date of this decision. Extensions of time under 37 CFR 1.136(a) are permitted. The reconsideration request should include a cover letter entitled "Renewed Petition" under 37 CFR 1.137(b)."

This application was held abandoned March 4, 2009, after no reply was received to the Notice of Allowance and Issue Fee Due mailed December 3, 2008. The notice set forth a statutory period of reply of three months from its mailing date. No response was received within the allowable period and the application became abandoned on March 4, 2009. A Notice of Abandonment was mailed March 31, 2009.

Effective December 1, 1997, the provisions of 37 CFR 1.137(b) now provide that where the delay in reply was unintentional, a petition may be filed to revive an abandoned application or a lapsed patent pursuant to 37 CFR 1.137(b). A grantable petition pursuant to 37 CFR 1.137(b) must be accompanied by:

(1) the required reply, unless previously filed. In a non-provisional application abandoned for failure to prosecute, the required reply may be met by the filing of a continuing application. In an application or patent, abandoned or lapsed for failure to pay the issue fee, or any portion thereof, the required reply must be the payment of the issue fee or any outstanding balance thereof.

(2) the petition fee as set forth in 37 CFR 1.17(m);

(3) a statement that the entire delay in filing the required reply from the due date for the reply until the filing of a grantable petition pursuant to 37 CFR 1.137(b) was unintentional. The Commissioner may require additional information where there is a question whether the delay was unintentional; and

(4) any terminal disclaimer (and fee set forth in 37 CFR 1.20(d)) required pursuant to 37 CFR 1.137(c).

The instant petition does not satisfy the requirements of item (3) above.

As to Item (1), the *Manual of Paten Examining Procedure*, Section 7711.03(c) provides, in pertinent part, that:

The Notice of Allowance and Issue Fee Due mailed December 3, 2008, required payment of the issue fee and publication fee. Neither fee accompanied the instant petition. A successful petition under 37 CFR 1.137(b) requires that a proper response to the last Office action accompany the petition. Accordingly, the renewed petition must be accompanied by a proper response to the Notice of Allowance and Issue Fee Due. If the response is payment of the issue fee and publication fee and completed Issue Fee Transmittal must also be included.

No additional petition fees are required with the renewed petition.

Further correspondence with respect to this matter should be addressed as follows:

By mail:

Mail Stop Petitions
Commissioner for Patents
United States Patent and Trademark Office
Box 1450
Alexandria, VA 22313-1450

By facsimile: (571) 273-8300
Attn: Office of Petitions

Telephone inquiries concerning this decision may be directed to the undersigned at (571) 272-3222.

Kenya A. McLaughlin
Petitions Attorney
Office of Petitions

UNITED STATES PATENT AND TRADEMARK OFFICE

Commissioner for Patents
United States Patent and Trademark Office
P.O. Box 1450
Alexandria, VA 22313-1450
www.uspto.gov

Ballard Spahr LLP
SUITE 1000
999 PEACHTREE STREET
ATLANTA GA 30309-3915

MAILED

MAY 20 2010

OFFICE OF PETITIONS

In re Application of

O'Brien, et al.

Application No. 11/582,669

Filed: October 18, 2006

Attorney Docket No. 026-40

DECISION ON PETITION

This is a decision on the renewed petition under 37 CFR §1.137(b), April 8, 2010, to revive the above-identified application.

The renewed petition is **granted**.

This application was held abandoned March 4, 2009, after no reply was received to the Notice of Allowance and Issue Fee Due mailed December 3, 2008. The notice set forth a statutory period of reply of three months from its mailing date. No response was received within the allowable period and the application became abandoned on March 4, 2009. A Notice of Abandonment was mailed March 31, 2009.

The fees were received on April 8, 2010

Form PTOL-85B, filed April 8, 2010, is noted and made of record.

The application is being directed to the Office of Data Management for further processing.

Telephone inquiries concerning this decision may be directed to the undersigned at (571) 272-3222.

Kenya A. McLaughlin
Petitions Attorney
Office of Petitions

UNITED STATES PATENT AND TRADEMARK OFFICE

UNITED STATES DEPARTMENT OF COMMERCE
United States Patent and Trademark Office
Address: COMMISSIONER FOR PATENTS
P.O. Box 1450
Alexandria, Virginia 22313-1450
www.uspto.gov

HAMILTON, BROOK, SMITH & REYNOLDS, P.C.
530 VIRGINIA ROAD
P.O. BOX 9133
CONCORD, MA 01742-9133

Mail Date: 04/21/2010

Applicant	: Gregory M. Waters	: DECISION ON REQUEST FOR
Patent Number	: 7668890	: RECALCULATION of PATENT
Issue Date	: 02/23/2010	: TERM ADJUSTMENT IN VIEW
Appliction No	: 11/582,685	: OF WYETH AND NOTICE OF INTENT TO
Filed	: 10/18/2006	: ISSUE CERTIFICATE OF CORRECTION
		:

The Request for Recalculation is **GRANTED** to the extent indicated.

The patent term adjustment has been determined to be **561** days. The USPTO will *sua sponte* issue a certificate of correction reflecting the amount of PTA days determined by the recalculation.

Prior to the issuance of the certificate of correction, the USPTO will afford patentee an opportunity to be heard and request reconsideration. Accordingly, patentee has **one month or thirty (30) days**, whichever is longer, to file a request for reconsideration of this patent term adjustment calculation. See 35 U.S.C. 154(b)(3)(B)(ii) and 37 CFR 1.322(a)(4). No extensions of time will be granted under 37 CFR 1.136.

Patentee should use document code PET.OP if electronically filing a request for reconsideration of this patent term adjustment calculation. The patentee must also include the information required by 37 CFR 1.705(b)(2) and the fee required by 37 CFR 1.18(e). If patentee does not file a timely request for reconsideration of this patent term adjustment calculation including the information required by 37 CFR 1.705(b)(2) and the fee required by 37 CFR 1.18(e), the USPTO will issue a certificate of correction reflecting the PTA determination noted above.

Patentee should be aware that in order to preserve the right to review in the United States District Court for the District of Columbia of the USPTO patent term adjustment determination, patentee must ensure that he or she also take the steps required under 35 U.S.C. 154(b)(4)(A) in a timely manner. Nothing in the request for recalculation should be construed as providing an alternative time frame for commencing a civil action under 35 U.S.C. 154(b)(4)(A).

Any questions concerning this decision should be directed to the Office of Patent Legal Administration at 571-272-7702.

UNITED STATES PATENT AND TRADEMARK OFFICE

Commissioner for Patents
United States Patent and Trademark Office
P.O. Box 1450
Alexandria, VA 22313-1450
www.uspto.gov

DILWORTH & BARRESE, LLP
333 EARLE OVINGTON BLVD.
SUITE 702
UNIONDALE, NY 11553

COPY MAILED

MAY 14 2007

OFFICE OF PETITIONS

In re Application of	:	
Matthew R. Pincus	:	
Application No. 11/582687	:	
Filing or 371(c) Date: 10/17/2006	:	
Attorney Docket Number:	:	DECISION
1181-17 CIP CON	:	ON PETITION

This is a decision on the "Petition Under 37 C.F.R. § 1.57(a)(3)", filed January 8, 2007, requesting the above-identified application be accorded a filing date of October 18, 2006, including the one and only drawing (Figure 1), based upon a priority claim for the benefit of prior-filed applications under 37 CFR 1.78.

The petition is dismissed.

Background

The application was filed on October 17, 2006. On November 2, 2006, the Office of Initial Patent Examination mailed a Notice of Incomplete Provisional Application (hereinafter "Notice"), informing Applicant, *inter alia*, that the application had NOT been accorded a filing date because the application had been deposited without drawings.

Applicant responds with the instant petition and request inclusion of the inadvertently omitted one and only drawing (Figure 1), based upon a priority claim to a prior-filed application in accordance with 37 CFR 1.57(a).

According a Filing date

A review of the file reveals that the specification contains composition claims. As stated in MPEP § 601.01(f), it is the practice of the PTO to treat an application that contains at least one process, method or composition claim as an application for which a drawing is not necessary for an understanding of the invention under 35 U.S.C. 113 (first sentence).

MPEP § 601.01(f) also states that:

> A nonprovisional application having at least one claim, or a provisional application having at least some disclosure, directed to the subject matter discussed above for which a drawing is usually not considered essential for a filing date, describing drawing figure(s) in the specification, but filed without drawings will be treated as an application filed without all of the drawing figures referred to in the specification as discussed in MPEP § 601.01(g), so long as the application contains something that can be construed as a written description.

This application contains composition claims; therefore, the application should have been treated as an application filed without all of the drawing figures referred to in the specification as discussed in MPEP § 601.01(g).

In applications filed without all of the drawing figure(s) referred to in the specification, the MPEP § 601.01(g) states that a "Notice of Omitted Item(s)" is mailed indicating that the application has been accorded a filing date, but is lacking some of the figures of drawings described in the specification.

In view of the above, the Notice mailed November 2, 2006, was mailed in error and is hereby withdrawn.

Petition under 37 CFR 1.57(a)

The MPEP 601.01(f) further provides that

> As an alternative to a petition under 37 CFR 1.53(e), if the drawing(s) was inadvertently omitted from an application filed on or after September 21, 2004, and the application contains a claim under 37 CFR 1.55 for priority of a prior-filed foreign application, or a claim under 37 CFR 1.78 for the benefit of a prior-filed provisional, nonprovisional, or international application, that was present on the filing date of the application, and the inadvertently omitted drawing(s) is completely contained in the prior-filed application, the applicant may submit the omitted drawing(s) by way of an amendment in compliance with 37 CFR 1.57(a). The amendment must be by way of a petition under 37 CFR 1.57(a)(3) accompanied by the petition fee set forth in 37 CFR 1.17(f). See MPEP § 201.17. (Emphasis supplied).

Applicant is advised that a petition is not necessary in this instance to add the omitted figures.

37 CFR 1.57(a), incorporation by reference, provides a method whereby an applicant may amend an application to include an inadvertently omitted portion of the specification or drawing(s). However, where a filing date has been accorded an application, a petition is not necessary to add the omitted portion of the specification or drawing(s). "If an application is not otherwise entitled to a filing date under § 1.53(b), the amendment must be by way of a petition pursuant to this

paragraph accompanied by the fee set forth in § 1.17(f)." 37 CFR 1.57(a)(3). (Emphasis supplied). *See, Also*, MPEP 201.17(F).

The Manual of Patent Examining Procedure ("MPEP") also provides that

> ...37 CFR 1.57(a) was added to provide a safeguard for applicants when a page(s) of the specification, or a portion thereof, or a sheet(s) of the drawing(s), or a portion thereof, is inadvertently omitted from an application, such as through a clerical error. 37 CFR 1.57(a) applies to applications filed on or after September 21, 2004. 37 CFR 1.57(a) permits inadvertently omitted material to be added to the application by way of a later filed amendment if the inadvertently omitted portion of the specification or drawing(s) is completely contained in a prior-filed application (for which priority/benefit is claimed) even though there is no explicit incorporation by reference of the prior-filed application. *See* MPEP § 201.17 for discussion regarding 37 CFR 1.57(a). *See* MPEP § 601.01(p). (Emphasis supplied).

MPEP 201.06(c)(IV)(B).

Applicant may add the omitted figure by way of amendment under 37 CFR 1.57, and without a petition. The issue of new matter is one appropriately addressed by the Examiner.

In view of the fact that the petition was necessitated by an error on the part of this Office, a refund of the petition fee has been scheduled via Treasury Check.

The application will be returned to the Office of Initial Patent Examination for withdrawal of the Notice of Incomplete Provisional Application mailed November 2, 2006; for mailing of a Notice of Omitted Item(s), and for further processing as a nonprovisional application with a filing date of October 17, 2006, using the application papers filed on that date.

Telephone inquiries concerning this matter should be directed Attorney Derek Woods at (571) 272-3232.

Charles Pearson
Director
Office of Petitions

UNITED STATES PATENT AND TRADEMARK OFFICE

Commissioner for Patents
United States Patent and Trademark Office
P.O. Box 1450
Alexandria, VA 22313-1450
www.uspto.gov

MAILED

JUL 02 2010

OFFICE OF PETITIONS

MILLER NASH LLP
601 UNION STREET
SUITE 4400
SEATTLE WA 98101-2352

In re Application of	:	
Steve Goucher et al.	:	
Application No. 11/582,701	:	DECISION ON PETITION
Filed: October 17, 2006	:	
Attorney Docket No. 502670-0058	:	

This is a decision on the petition under the unintentional provisions of 37 CFR 1.137(b), filed April 13, 2010, to revive the above-identified application.

The petition is **GRANTED**.

This application became abandoned for failure to timely pay the issue and publication fees on or before March 23, 2010, as required by the Notice of Allowance and Fee(s) Due, mailed December 23, 2009 and submit corrected drawings as required by the Notice of Allowability mailed December 23, 2009. Accordingly, the date of abandonment of this application is March 24, 2010. A Notice of Abandonment was mailed on April 12, 2010.

The petition satisfies the requirements of 37 CFR 1.137(b) in that petitioner has supplied (1) the reply in the form of payment of the issue fee of $755, publication fee of $300 and corrected drawings, (2) the petition fee of $810, and (3) a proper statement of unintentional delay. Accordingly, the issue and publication fees and corrected drawings are accepted as being unintentionally delayed.

The application file does not indicate a change of address has been filed in this case, although the address given on the petition differs from the address of record. A change of address should be filed in this case in accordance with MPEP 601.03. A courtesy copy of this decision is being mailed to the address noted on the petition. However, until otherwise instructed, all future correspondence regarding this application will be mailed solely to the address of record.

Telephone inquiries concerning this decision should be directed to Kimberly Inabinet at (571) 272-4618.

This application is being referred to the Office of Data Management for further processing into a patent.

/Kimberly Inabinet/

Kimberly Inabinet
Petitions Examiner
Office of Petitions

cc: Samantha C. Pak
Miller Nash LLP
4400 Two Union Square
601 Union Street
Seattle, WA 98101-2352

UNITED STATES PATENT AND TRADEMARK OFFICE

Commissioner for Patents
United States Patent and Trademark Office
P.O. Box 1450
Alexandria, VA 22313-1450
www.uspto.gov

TOWNSEND AND TOWNSEND AND CREW, LLP/PIXAR
TWO EMBARCADERO CENTER, EIGHTH FLOOR
SAN FRANCISCO CA 94111-3834

COPY MAILED

JUN 2 2 2007

OFFICE OF PETITIONS

In re Application of	:	
ANDERSON, et al.	:	
Application No. 11/582,704	:	DECISION ON PETITION
Filed: October 17, 2006	:	TO WITHDRAW
Attorney Docket No. **021751-000210US**	:	FROM RECORD
	:	

This is a decision on the Request to Withdraw as attorney or agent of record under 37 C.F.R. § 1.36(b), filed March 20, 2007.

The request is **APPROVED**.

A grantable request to withdraw as attorney/agent of record must be signed by every attorney/agent seeking to withdraw or contain a clear indication that one attorney is signing on behalf of another/others. A request to withdraw will not be approved unless at least 30 (thirty) days would remain between the date of approval and the later of the expiration date of a time to file a response or the expiration date of the maximum time period which can be extended under 37 C.F.R. § 1.136(a).

The request was signed by Stephen Y. Peng on behalf of all attorneys of record. All attorneys/agents associated have been withdrawn. Applicant is reminded that there is no attorney of record at this time.

The request to change the correspondence of record is not acceptable as the requested correspondence address is not that of: (1) the first named signing inventor; or (2) an intervening assignee of the entire interest under 37 C.F.R 3.71. All future communications from the Office will be directed to the first named signing inventor at the first copied address below until otherwise properly notified by the applicant.

Telephone inquiries concerning this decision should be directed to the undersigned at 571-272-7253.

Monica A. Graves
Petitions Examiner
Office of Petitions

cc: **JOHN ANDERSON**
32 DUTCH VALLEY LANE
SAN ANSELMO, CA 94960

cc: **JONATHAN HOLLANDER**
LAW OFFICE OF JONATHAN HOLLANDER PC
73 SUMNERSTREET, SUITE 301
SAN FRANCISCO, CA 94103-3979

UNITED STATES PATENT AND TRADEMARK OFFICE

UNITED STATES DEPARTMENT OF COMMERCE
United States Patent and Trademark Office
Address: COMMISSIONER FOR PATENTS
P.O. Box 1450
Alexandria, Virginia 22313-1450
www.uspto.gov

VMWARE, INC.
DARRYL SMITH
3401 Hillview Ave.
PALO ALTO, CA 94304

Mail Date: 04/20/2010

Applicant	: Osten Kit Colbert	: DECISION ON REQUEST FOR
Patent Number	: 7624240	: RECALCULATION of PATENT
Issue Date	: 11/24/2009	: TERM ADJUSTMENT IN VIEW
Appliction No	: 11/582,734	: OF WYETH AND NOTICE OF INTENT TO
Filed	: 10/17/2006	: ISSUE CERTIFICATE OF CORRECTION
		:

The Request for Recalculation is **GRANTED** to the extent indicated.

The patent term adjustment has been determined to be **273** days. The USPTO will *sua sponte* issue a certificate of correction reflecting the amount of PTA days determined by the recalculation.

Prior to the issuance of the certificate of correction, the USPTO will afford patentee an opportunity to be heard and request reconsideration. Accordingly, patentee has **one month or thirty (30) days**, whichever is longer, to file a request for reconsideration of this patent term adjustment calculation. See 35 U.S.C. 154(b)(3)(B)(ii) and 37 CFR 1.322(a)(4). No extensions of time will be granted under 37 CFR 1.136.

Patentee should use document code PET.OP if electronically filing a request for reconsideration of this patent term adjustment calculation. The patentee must also include the information required by 37 CFR 1.705(b)(2) and the fee required by 37 CFR 1.18(e). If patentee does not file a timely request for reconsideration of this patent term adjustment calculation including the information required by 37 CFR 1.705(b)(2) and the fee required by 37 CFR 1.18(e), the USPTO will issue a certificate of correction reflecting the PTA determination noted above.

Patentee should be aware that in order to preserve the right to review in the United States District Court for the District of Columbia of the USPTO patent term adjustment determination, patentee must ensure that he or she also take the steps required under 35 U.S.C. 154(b)(4)(A) in a timely manner. Nothing in the request for recalculation should be construed as providing an alternative time frame for commencing a civil action under 35 U.S.C. 154(b)(4)(A).

Any questions concerning this decision should be directed to the Office of Patent Legal Administration at 571-272-7702.

UNITED STATES PATENT AND TRADEMARK OFFICE

Commissioner for Patents
United States Patent and Trademark Office
P.O. Box 1450
Alexandria, VA 22313-1450
www.uspto.gov

GEN PROBE INCORPORATED
10210 GENETIC CENTER DRIVE
Mail Stop #1 / Patent Dept.
SAN DIEGO, CA 92121

COPY MAILED

APR 09 2009

OFFICE OF PETITIONS

In re Application of	:	
Jennifer J. Bungo, et. al.	:	
Application No. 11/582,770	:	ON PETITION
Filed: October 17, 2006	:	
Attorney Docket No. GP190-03.UT	:	

This is a decision on the petition under 37 CFR 1.137(b), filed February 20, 2009, to revive the above-identified application.

The application became abandoned for failure to file a reply to the non-final Office action mailed on July 14, 2008. A Notice of Abandonment was mailed on February 18, 2009.

The petition satisfies the requirements of 37 CFR 1.137(b) in that petitioner has supplied (1) the reply in the form of an amendment; (2) the petition fee of $1,620; and (3) a proper statement of unintentional delay. Therefore, the petition is **GRANTED**.

This application file is being referred to Technology Center Art Unit 1634 for review of the amendment filed with the present petition.

Telephone inquiries concerning this decision should be directed to the undersigned at (571) 272-3226.

Andrea Smith
Petitions Examiner
Office of Petitions

UNITED STATES PATENT AND TRADEMARK OFFICE

UNITED STATES DEPARTMENT OF COMMERCE
United States Patent and Trademark Office
Address: COMMISSIONER FOR PATENTS
P.O. Box 1450
Alexandria, Virginia 22313-1450
www.uspto.gov

MHKKG/Oracle (Sun)
P.O. BOX 398
AUSTIN, TX 78767

Mail Date: 04/20/2010

Applicant	: Ishwardutt Parulkar	: DECISION ON REQUEST FOR
Patent Number	: 7650543	: RECALCULATION of PATENT
Issue Date	: 01/19/2010	: TERM ADJUSTMENT IN VIEW
Appliction No	: 11/582,798	: OF WYETH AND NOTICE OF INTENT TO
Filed	: 10/18/2006	: ISSUE CERTIFICATE OF CORRECTION
		:

The Request for Recalculation is **GRANTED** to the extent indicated.

The patent term adjustment has been determined to be **733** days. The USPTO will *sua sponte* issue a certificate of correction reflecting the amount of PTA days determined by the recalculation.

Prior to the issuance of the certificate of correction, the USPTO will afford patentee an opportunity to be heard and request reconsideration. Accordingly, patentee has **one month or thirty (30) days**, whichever is longer, to file a request for reconsideration of this patent term adjustment calculation. See 35 U.S.C. 154(b)(3)(B)(ii) and 37 CFR 1.322(a)(4). No extensions of time will be granted under 37 CFR 1.136.

Patentee should use document code PET.OP if electronically filing a request for reconsideration of this patent term adjustment calculation. The patentee must also include the information required by 37 CFR 1.705(b)(2) and the fee required by 37 CFR 1.18(e). If patentee does not file a timely request for reconsideration of this patent term adjustment calculation including the information required by 37 CFR 1.705(b)(2) and the fee required by 37 CFR 1.18(e), the USPTO will issue a certificate of correction reflecting the PTA determination noted above.

Patentee should be aware that in order to preserve the right to review in the United States District Court for the District of Columbia of the USPTO patent term adjustment determination, patentee must ensure that he or she also take the steps required under 35 U.S.C. 154(b)(4)(A) in a timely manner. Nothing in the request for recalculation should be construed as providing an alternative time frame for commencing a civil action under 35 U.S.C. 154(b)(4)(A).

Any questions concerning this decision should be directed to the Office of Patent Legal Administration at 571-272-7702.

UNITED STATES PATENT AND TRADEMARK OFFICE

UNITED STATES DEPARTMENT OF COMMERCE
United States Patent and Trademark Office
Address: COMMISSIONER FOR PATENTS
P.O. Box 1450
Alexandria, Virginia 22313-1450
www.uspto.gov

MHKKG/Oracle (Sun)
P.O. BOX 398
AUSTIN, TX 78767

Mail Date: 04/20/2010

Applicant	: Ishwardutt Parulkar	: DECISION ON REQUEST FOR
Patent Number	: 7657804	: RECALCULATION of PATENT
Issue Date	: 02/02/2010	: TERM ADJUSTMENT IN VIEW
Appliction No	: 11/582,803	: OF WYETH AND NOTICE OF INTENT TO
Filed	: 10/18/2006	: ISSUE CERTIFICATE OF CORRECTION
		:

The Request for Recalculation is **GRANTED** to the extent indicated.

The patent term adjustment has been determined to be **751** days. The USPTO will *sua sponte* issue a certificate of correction reflecting the amount of PTA days determined by the recalculation.

Prior to the issuance of the certificate of correction, the USPTO will afford patentee an opportunity to be heard and request reconsideration. Accordingly, patentee has **one month or thirty (30) days**, whichever is longer, to file a request for reconsideration of this patent term adjustment calculation. See 35 U.S.C. 154(b)(3)(B)(ii) and 37 CFR 1.322(a)(4). No extensions of time will be granted under 37 CFR 1.136.

Patentee should use document code PET.OP if electronically filing a request for reconsideration of this patent term adjustment calculation. The patentee must also include the information required by 37 CFR 1.705(b)(2) and the fee required by 37 CFR 1.18(e). If patentee does not file a timely request for reconsideration of this patent term adjustment calculation including the information required by 37 CFR 1.705(b)(2) and the fee required by 37 CFR 1.18(e), the USPTO will issue a certificate of correction reflecting the PTA determination noted above.

Patentee should be aware that in order to preserve the right to review in the United States District Court for the District of Columbia of the USPTO patent term adjustment determination, patentee must ensure that he or she also take the steps required under 35 U.S.C. 154(b)(4)(A) in a timely manner. Nothing in the request for recalculation should be construed as providing an alternative time frame for commencing a civil action under 35 U.S.C. 154(b)(4)(A).

Any questions concerning this decision should be directed to the Office of Patent Legal Administration at 571-272-7702.

UNITED STATES PATENT AND TRADEMARK OFFICE

Commissioner for Patents
United States Patent and Trademark Office
P.O. Box 1450
Alexandria, VA 22313-1450
www.uspto.gov

CHOATE, HALL & STEWART LLP
TWO INTERNATIONAL PLACE
BOSTON, MA 02110

COPY MAILED
DEC 01 2008

In re Application of	:	
MAMER, et al.	:	
Application No. 11/582,817	:	DECISION ON PETITION
Filed: October 18, 2006	:	TO MAKE SPECIAL UNDER
Attorney Docket No. **2007135-0002**	:	37 CFR 1.102(c)(1)
	:	

This is a decision on the petition under 37 CFR 1.102(c)(1), filed October 27, 2008, to make the above-identified application special based on applicant's age as set forth in M.P.E.P. § 708.02, Section IV.

The petition is **GRANTED**.

A grantable petition to make an application special under 37 CFR 1.102(c)(1) and MPEP § 708.02, Section IV: Applicant's Age must be accompanied by evidence showing that at least one of the applicants is 65 years of age, or more, such as a birth certificate or a statement by applicant. No fee is required

The instant petition includes the declaration of inventor Keith H. Johnson, attesting to his age. Accordingly, the above-identified application has been accorded "special" status.

Inquiries concerning either the examination or status of the application should be directed to the Technology Center at 571-272-2800.

Telephone inquiries concerning this decision should be directed to the undersigned at 571-272-7253.

The application is being forwarded to the Technology Center Art Unit 2884 for action on the merits commensurate with this decision.

/Monica A. Graves/
Petitions Examiner
Office of Petitions

UNITED STATES PATENT AND TRADEMARK OFFICE

Commissioner for Patents
United States Patent and Trademark Office
P.O. Box 1450
Alexandria, VA 22313-1450
www.uspto.gov

CHOATE, HALL & STEWART LLP
TWO INTERNATIONAL PLACE
BOSTON, MA 02110

COPY MAILED

DEC 0 5 2008

OFFICE OF PETITIONS

In re Application of
MAMER, et al.
Application No. 11/582,817
Filed: October 18, 2006
Attorney Docket No.
20077.200233(C9671.003)

DECISION ON PETITION
UNDER 37 CFR 1.137(b)

This is a decision on the petition under 37 CFR 1.137(b), filed September 5, 2007, to revive the above-identified application.

The petition is **GRANTED**.

The application became abandoned for failure to reply in a timely manner to the Notice to File Missing Parts of Nonprovisional Application (Notice), mailed November 7, 2006. The Notice set a period for reply of two (2) months from the mail date of the Notice. No extensions of time under the provisions of 37 CFR 1.136(a) were obtained. Accordingly, the application became abandoned on January 8, 2007.

37 CFR 1.137(b)(3) requires a statement that "the entire delay in filing the required reply from the due date for the reply until the filing of a grantable petition pursuant to 37 CFR 1.137(b) was unintentional." Since the statement appearing in the petition varies from the language required by 37 CFR 1.137(b)(3), the statement is being construed as the required statement. Petitioner must notify the Office if this is **not** a correct reading of the statement appearing in the petition.

The petition satisfies the requirements of 37 CFR 1.137(b) in that petitioner has supplied (1) the reply in the form of the declaration and surcharge fee of $65; (2) the petition fee of $750; and (3) an adequate statement of unintentional delay.

The application is being referred to the Office of Patent Application Processing for further processing commensurate with this decision.

Telephone inquiries concerning this decision should be directed to Monica A. Graves at (571) 272-7253.

Brian W. Brown
Petitions Examiner
Office of Petitions

UNITED STATES PATENT AND TRADEMARK OFFICE

Commissioner for Patents
United States Patent and Trademark Office
P.O. Box 1450
Alexandria, VA 22313-1450
www.uspto.gov

Bozicevic, Field & Francis, LLP
1900 University Avenue, Suite 200
East Palo Alto, CA 94303

COPY MAILED

AUG 2 2 2007

OFFICE OF PETITIONS

In re Application of	:	
Michele P. Calos	:	
Application No. 11/582,836	:	DECISION ON PETITION
Filed: October 17, 2006	:	TO WITHDRAW
Attorney Docket No. STAN-300CON2	:	FROM RECORD
	:	

This is a decision on the Request to Withdraw as attorney or agent of record under 37 C.F.R. § 1.36(b), filed April 30, 2007.

The request is **APPROVED**.

A review of the file record indicates that Bret E. Field and the attorneys/agents associated with customer number 24353: (1) does not have power of attorney in this patent application; and (2) has been employed or otherwise engaged in the proceedings in this patent application. In view of the present decision, all the attorneys have been withdrawn from the present application and may not prepare or submit papers under 37 C.F.R. § 1.34, or correspond in any manner in this application unless appointed in an acceptable power of attorney under 37 C.F.R. § 1.32(b).

Applicant is reminded that there is no attorney of record at this time.

The request to change the correspondence of record is not acceptable as the requested correspondence address is not that of (1) the first named signing inventor; or (2) an intervening assignee of the entire interest under 37 C.F.R. 3.71. Accordingly, all correspondence will be mailed to the sole inventor in this application. A courtesy copy of this decision will be mailed to address noted on the request to withdraw. If this firm desires to receive future correspondence regarding this application, the proper power of attorney documents must be submitted.

There are no outstanding Office actions at this time.

Telephone inquiries concerning this decision should be directed to Kimberly Inabinet at 571-272-4618.

Frances Hicks
Petitions Examiner
Office of Petitions

cc: Michele Pamela Calos
1491 Benito Avenue
Burlingame, CA 94010

cc: Edward J. Baba, Esq.
Morgan, Lewis & Bockius, LLP
One Market Street, Spear Street Tower
San Francisco, CA 94105

UNITED STATES PATENT AND TRADEMARK OFFICE

UNITED STATES DEPARTMENT OF COMMERCE
United States Patent and Trademark Office
Address: COMMISSIONER FOR PATENTS
P.O. Box 1450
Alexandria, Virginia 22313-1450
www.uspto.gov

APPLICATION NUMBER	FILING OR 371 (c) DATE	FIRST NAMED APPLICANT	ATTY. DOCKET NO./TITLE
11/582,836	10/17/2006	Michele P. Calos	STAN-300CON2

CONFIRMATION NO. 9417

OC000000025395735

24353
BOZICEVIC, FIELD & FRANCIS LLP
1900 UNIVERSITY AVENUE
SUITE 200
EAST PALO ALTO, CA 94303

Date Mailed: 08/16/2007

NOTICE REGARDING CHANGE OF POWER OF ATTORNEY

This is in response to the Power of Attorney filed 04/30/2007.

- The withdrawal as attorney in this application has been accepted. Future correspondence will be mailed to the new address of record. 37 CFR 1.33.

Kimberly Brabinet

Office of Initial Patent Examination (571) 272-4000, or 1-800-PTO-9199
FORMER ATTORNEY/AGENT COPY

UNITED STATES PATENT AND TRADEMARK OFFICE

Commissioner for Patents
United States Patent and Trademark Office
P.O. Box 1450
Alexandria, VA 22313-1450
www.uspto.gov

MORGAN, LEWIS & BOCKIUS LLP (SF)
ONE MARKET, SPEAR STREET TOWER
SUITE 2800
SAN FRANCISCO, CA 94105

COPY MAILED

JUN 1 8 2008

In re Application of	:	
Michele P. CALOS	:	
Application No. 11/582,836	:	DECISION ON PETITION
Filed: October 17, 2006	:	TO WITHDRAW
Attorney Docket No. 068597-5001US02	:	FROM RECORD
	:	

This is a decision on the Request to Withdraw as attorney or agent of record under 37 C.F.R. § 1.36(b), filed May 20, 2008.

The request is **NOT APPROVED**.

The Office cannot approve the request at this time since the reason provided does not meet any of the conditions under the mandatory or permissive categories enumerated in 37 CFR 10.40. Section 10.40 of Title 37 of the Code of Federal Regulation states, "a practitioner shall not withdraw from employment in a proceeding before the Office without permission from the Office." More specifically, 37 CFR 10.40 states, "if paragraph (b) of this section is not applicable, a practitioner may not request permission to withdraw in matter pending before the Office unless such request or such withdrawal is" for one the permissive reasons listed in 37 CFR 10.40(c). The reason set forth in the request, files being transferred to another law firm, does not meet any of the conditions set forth in 37 CFR 10.40.

All future communications from the Office will continue to be directed to the above-listed address until otherwise notified by applicant.

Telephone inquiries concerning this decision should be directed to the undersigned at 571-272-6735.

Diane Goodwyn
Petitions Examiner
Office of Petitions

cc: EDWARD J. BABA, ESQ.
BOZICEVIC, FIELD & FRANCIS, LLP
1900 UNIVERSITY AVENUE
SUITE 200
EAST PALO ALTO, CA 94303

UNITED STATES PATENT AND TRADEMARK OFFICE

Commissioner for Patents
United States Patent and Trademark Office
P.O. Box 1450
Alexandria, VA 22313-1450
www.uspto.gov

JJGJR.: 08-07

Paper No: __

COPY MAILED

SEP 04 2007

OFFICE OF PETITIONS

HOWREY LLP
C/O IP DOCKETING DEPARTMENT
2941 FAIRVIEW PARK DRIVE, SUITE 200
FALLS CHURCH VA 22042-2924

In re Application of	:	
Zang et al.	:	
Application No. 11/582,844	:	ON PETITION
Filed: 17 October, 2006	:	
Attorney Docket No. 07783.0012.CPUS04	:	

This is a decision on the petition filed on 27 December, 2006, under 37 C.F.R. §1.47(a), to prosecute the application although there is a non-signing inventor.

The Office regrets the delay in addressing this matter, however, the instant petition was presented to the attorneys in the Office of Petitions only at this writing.[1]

The petition under 37 C.F.R. §1.47(a) is **GRANTED**.

BACKGROUND

The record indicates:

- the instant application was filed on 17 October, 2006, without, *inter alia*, a fully executed oath/declaration;

[1] **NOTE: Monitoring of the status of applications on PAIR can inform one's management of application responses and provide an indication when mailings of Office actions should be expected. Status Inquiries filed at three (3) or four (4) month intervals provide a demonstration of diligence and attention in supporting a petition seeking relief under 37 C.F.R. §1.181.**

- on 11 August, 2006, the Office mailed a Notice of Missing Parts indicating, *inter alia*, that a fully executed oath/declaration (signed and dated) was required;

- on 27 December, 2006, Petitioner Viola T. Kung (Reg. No.41,131) filed, *inter alia*, the instant petition, an oath/declaration signed by HongMei Zang and Ziaojia Wang (for themselves and on behalf of) but not the non-signing co-inventor Rong-Chang Liang (Mr. Liang) and the statements of Petitioner evidencing that the entire application (description, claims, abstract and drawings) were sent to Mr, Liang, as required by statute and regulation, with an express statement in the petition the mailing address of Mr Liang and a copy of the transmittal letter evidencing that process, and that he has since not joined in signing the oath/declaration,.

Out of an abundance of caution, Petitioners always are reminded that those registered to practice *and* all others who make representations before the Office are reminded to inquire into the underlying facts of representations made to the Office and support averments with the appropriate documentation–since all owe to the Office the continuing duty to disclose.[2]

---

[2] See supplement of 17 June, 1999. The Patent and Trademark Office is relying on petitioner's duty of candor and good faith and accepting a statement made by Petitioner. See Changes to Patent Practice and Procedure, 62 Fed. Reg. at 53160 and 53178, 1203 Off. Gaz. Pat. Office at 88 and 103 (responses to comments 64 and 109)(applicant obligated under 37 C.F.R. §10.18 to inquire into the underlying facts and circumstances when providing statements to the Patent and Trademark Office).

Specifically, the regulations at 37 C.F.R. §10.18 provide:

§ 10.18 Signature and certificate for correspondence filed in the Patent and Trademark Office.
(a) For all documents filed in the Office in patent, trademark, and other non-patent matters, except for correspondence that is required to be signed by the applicant or party, each piece of correspondence filed by a practitioner in the Patent and Trademark Office must bear a signature by such practitioner complying with the provisions of §1.4(d), §1.4(e), or § 2.193(c)(1) of this chapter.
(b) By presenting to the Office (whether by signing, filing, submitting, or later advocating) any paper, the party presenting such paper, whether a practitioner or non-practitioner, is certifying that—

(1) All statements made therein of the party's own knowledge are true, all statements made therein on information and belief are believed to be true, and all statements made therein are made with the knowledge that whoever, in any matter within the jurisdiction of the Patent and Trademark Office, knowingly and willfully falsifies, conceals, or covers up by any trick, scheme, or device a material fact, or makes any false, fictitious or fraudulent statements or representations, or makes or uses any false writing or document knowing the same to contain any false, fictitious or fraudulent statement or entry, shall be subject to the penalties set forth under 18 U.S.C. 1001, and that violations of this paragraph may jeopardize the validity of the application or document, or the validity or enforceability of any patent, trademark registration, or certificate resulting therefrom; and

(2) To the best of the party's knowledge, information and belief, formed after an inquiry reasonable under the circumstances, that —

(i) The paper is not being presented for any improper purpose, such as to harass someone or to cause unnecessary delay or needless increase in the cost of prosecution before the Office;

(ii) The claims and other legal contentions therein are warranted by existing law or by a nonfrivolous argument for the extension, modification, or reversal of existing law or the establishment of new law;

(iii) The allegations and other factual contentions have evidentiary support or, if specifically so identified, are likely to have evidentiary support after a reasonable opportunity for further investigation or discovery; and

(iv) The denials of factual contentions are warranted on the evidence, or if specifically so identified, are reasonably based on a lack of information or belief.

(c) Violations of paragraph (b)(1) of this section by a practitioner or non-practitioner may jeopardize the validity of the application or document, or the validity or enforceability of any patent, trademark registration, or certificate resulting therefrom. Violations of any of paragraphs (b)(2)(i) through (iv) of this section are, after notice and reasonable opportunity to respond, subject to such sanctions as deemed appropriate by the Commissioner, or the Commissioner's designee, which may include, but are not limited to, any combination of —

(1) Holding certain facts to have been established;

(2) Returning papers;

This application and its papers have been reviewed and found in compliance with 37 C.F.R. §1.47(a).

This application hereby is **ACCORDED status under 37 C.F.R. §1.47(a)**.

As provided under 37 C.F.R. §1.47(a), the Office will forward notice of this application's filing to the non-signing inventor at the address given in the petition.

Notice of the filing of this application also will be published in the Official Gazette.

This file is being released to OIPE for processing as necessary to reflect the instant decision before being released for further processing in due course.

While telephone inquiries regarding this decision may be directed to the undersigned at (571) 272-3214, it is noted that all practice before the Office is in writing (see: 37 C.F.R. §1.2[3]) and the proper authority for action on any matter in this regard are the statutes (35 U.S.C.), regulations (37 C.F.R.) and the commentary on policy (MPEP). Therefore, no telephone discussion may be controlling or considered authority for Petitioner's/Caller's action(s).

John J. Gillon, Jr.
Senior Attorney
Office of Petitions

---

(3) Precluding a party from filing a paper, or presenting or contesting an issue;
(4) Imposing a monetary sanction;
(5) Requiring a terminal disclaimer for the period of the delay; or
(6) Terminating the proceedings in the Patent and Trademark Office.

(d) Any practitioner violating the provisions of this section may also be subject to disciplinary action. See § 10.23(c)(15).
[Added 50 FR 5175, Feb. 6, 1985, effective Mar. 8, 1985; para. (a) revised, 58 FR 54494, Oct. 22, 1993, effective Nov. 22, 1993; paras. (a) & (b) revised, paras. (c) & (d) added, 62 FR 53131, Oct. 10, 1997, effective Dec. 1, 1997; para. (a) revised, 69 FR 56481, Sept. 21, 2004, effective Oct. 21, 2004]

[3] The regulations at 37 C.F.R. §1.2 provide:
§1.2 Business to be transacted in writing.
All business with the Patent and Trademark Office should be transacted in writing.The personal attendance of applicants or their attorneys or agents at the Patent and Trademark Office is unnecessary. The action of the Patent and Trademark Office will be based exclusively on the written record in the Office. No attention will be paid to any alleged oral promise, stipulation,or understanding in relation to which there is disagreement or doubt.

UNITED STATES PATENT AND TRADEMARK OFFICE

Commissioner for Patents
United States Patent and Trademark Office
P.O. Box 1450
Alexandria, VA 22313-1450
www.uspto.gov

JJGJR.: 08-07

Paper No: __

COPY MAILED

SEP 0 4 2007

OFFICE OF PETITIONS

RONG-CHANG LIANG
875 BRENT DRIVE
CUPERTINO, CA 95014

In re Application of :
Zang et al. :
Application No. 11/582,844 : COMMUNICATION
Filed: 17 October, 2006 :
Attorney Docket No. 07783.0012.CPUS04 :

Dear Rong-Chang Liang:

You are named as inventor in the above identified United States patent application, filed under the provisions of 35 U.S.C. §116 (United States Code), and 37 C.F.R. §1.47,[1] ¶a, Rules of Practice in Patent Cases. Should a patent be granted on the application you will be designated therein as inventor.

As a named inventor you are entitled to inspect any paper in the file wrapper of the application,

---

[1] The regulations at 37 C.F.R. §1.47 provide:

§ 1.47 Filing when an inventor refuses to sign or cannot be reached.

(a) If a joint inventor refuses to join in an application for patent or cannot be found or reached after diligent effort, the application may be made by the other inventor on behalf of himself or herself and the nonsigning inventor. The oath or declaration in such an application must be accompanied by a petition including proof of the pertinent facts, the fee set forth in §1.17(h), and the last known address of the nonsigning inventor. The nonsigning inventor may subsequently join in the application by filing an oath or declaration complying with §1.63.

(b) Whenever all of the inventors refuse to execute an application for patent, or cannot be found or reached after diligent effort, a person to whom an inventor has assigned or agreed in writing to assign the invention, or who otherwise shows sufficient proprietary interest in the matter justifying such action, may make application for patent on behalf of and as agent for all the inventors. The oath or declaration in such an application must be accompanied by a petition including proof of the pertinent facts, a showing that such action is necessary to preserve the rights of the parties or to prevent irreparable damage, the fee set forth in §1.17(h), and the last known address of all of the inventors. An inventor may subsequently join in the application by filing an oath or declaration complying with §1.63.

© The Office will send notice of the filing of the application to all inventors who have not joined in the application at the address(es) provided in the petition under this section, and publish notice of the filing of the application in the *Official Gazette*. The Office may dispense with this notice provision in a continuation or divisional application, if notice regarding the filing of the prior application was given to the nonsigning inventor(s).

[47 Fed. Reg. 41275, Sept. 17, 1982, effective Oct. 1, 1982; 48 Fed. Reg. 2709, Jan. 20, 1983, effective Feb. 27, 1983; revised, 62 Fed. Reg. 53131, Oct. 10, 1997, effective Dec. 1, 1997; revised, 65 Fed. Reg. 54604, Sept. 8, 2000, effective Nov. 7, 2000]

order copies of all or any part thereof (at a prepaid cost per 37 C.F.R. §1.19) or make your position of record in the application. Alternatively, you may arrange to do any of the preceding through a registered patent attorney or agent presenting written authorization from you. If you care to join the application, counsel of record (see below) would presumably assist you. Joining in the application would entail the filing of an appropriate oath or declaration by you pursuant to 37 C.F.R. §1.63.

Requests for information regarding your application should be directed to the File Information Unit at (703) 308-2733.

Information regarding how to pay for and order a copy of the application, or a specific paper in the application, should be directed to Certification Division at (703) 308-9726 or toll-free: (800) 972-6382 (outside the Washington D.C. area).

While telephone inquiries regarding this decision may be directed to the undersigned at (571) 272-3214, it is noted that all practice before the Office is in writing (see: 37 C.F.R. §1.2[2]) and the proper authority for action on any matter in this regard are the statutes (35 U.S.C.), regulations (37 C.F.R.) and the commentary on policy (MPEP). Therefore, no telephone discussion may be controlling or considered authority for Petitioner's/Caller's action(s).

John J. Gillon, Jr.
Senior Attorney
Office of Petitions

Counsel of Record:
HOWREY LLP
C/O IP DOCKETING DEPARTMENT
2941 FAIRVIEW PARK DRIVE, SUITE 200
FALLS CHURCH VA 22042-2924

---

[2] The regulations at 37 C.F.R. §1.2 provide:
§1.2 Business to be transacted in writing.
All business with the Patent and Trademark Office should be transacted in writing.The personal attendance of applicants or their attorneys or agents at the Patent and Trademark Office is unnecessary. The action of the Patent and Trademark Office will be based exclusively on the written record in the Office. No attention will be paid to any alleged oral promise, stipulation,or understanding in relation to which there is disagreement or doubt.

UNITED STATES PATENT AND TRADEMARK OFFICE

UNITED STATES DEPARTMENT OF COMMERCE
United States Patent and Trademark Office
Address: COMMISSIONER FOR PATENTS
P.O. Box 1450
Alexandria, Virginia 22313-1450
www.uspto.gov

LADAS & PARRY LLP
26 WEST 61ST STREET
NEW YORK, NY 10023

Mail Date: 04/20/2010

Applicant	: Arnold S. Prywes	: DECISION ON REQUEST FOR
Patent Number	: 7655831	: RECALCULATION of PATENT
Issue Date	: 02/02/2010	: TERM ADJUSTMENT IN VIEW
Appliction No	: 11/582,855	: OF WYETH AND NOTICE OF INTENT TO
Filed	: 10/18/2006	: ISSUE CERTIFICATE OF CORRECTION
		:

The Request for Recalculation is **GRANTED** to the extent indicated.

The patent term adjustment has been determined to be **373** days. The USPTO will *sua sponte* issue a certificate of correction reflecting the amount of PTA days determined by the recalculation.

Prior to the issuance of the certificate of correction, the USPTO will afford patentee an opportunity to be heard and request reconsideration. Accordingly, patentee has **one month or thirty (30) days**, whichever is longer, to file a request for reconsideration of this patent term adjustment calculation. See 35 U.S.C. 154(b)(3)(B)(ii) and 37 CFR 1.322(a)(4). No extensions of time will be granted under 37 CFR 1.136.

Patentee should use document code PET.OP if electronically filing a request for reconsideration of this patent term adjustment calculation. The patentee must also include the information required by 37 CFR 1.705(b)(2) and the fee required by 37 CFR 1.18(e). If patentee does not file a timely request for reconsideration of this patent term adjustment calculation including the information required by 37 CFR 1.705(b)(2) and the fee required by 37 CFR 1.18(e), the USPTO will issue a certificate of correction reflecting the PTA determination noted above.

Patentee should be aware that in order to preserve the right to review in the United States District Court for the District of Columbia of the USPTO patent term adjustment determination, patentee must ensure that he or she also take the steps required under 35 U.S.C. 154(b)(4)(A) in a timely manner. Nothing in the request for recalculation should be construed as providing an alternative time frame for commencing a civil action under 35 U.S.C. 154(b)(4)(A).

Any questions concerning this decision should be directed to the Office of Patent Legal Administration at 571-272-7702.

UNITED STATES PATENT AND TRADEMARK OFFICE

Commissioner for Patents
United States Patent and Trademark Office
P.O. Box 1450
Alexandria, VA 22313-1450
www.uspto.gov

VERTIFLEX, INC.
PERKINS COIE LLP
P.O. BOX 1247
SEATTLE WA 98111-1247

MAILED

APR 20 2010

OFFICE OF PETITIONS

In re Application of	:	
ALTARAC, Moti et al.	:	
Application No. 11/582,874	:	DECISION ON PETITION
Filed: October 18, 2006	:	TO WITHDRAW
Attorney Docket No. **65837-8005US10**	:	FROM RECORD
	:	

This is a decision on the Request to Withdraw as attorney or agent of record under 37 C.F.R. § 1.36(b), filed January 11, 2010.

The request is moot because a revocation of power of attorney has been previously filed.

A review of the file record indicates that the power of attorney to VERTIFLEX, INC. has been revoked by the assignee of the patent application on January 13, 2010. Accordingly, the request to withdraw under 37 C.F.R. § 1.36(b) is moot.

All future communications from the Office will continue to be directed to the below-listed address until otherwise notified by applicant.

Telephone inquires concerning this decision should be directed to Tredelle Jackson at 571-272-2783.

/Tredelle D. Jackson
Paralegal Specialist
Office of Petitions

cc: **PERKINS COIE LLP**
PATENT-SEA
P.O. BOX 1247
SEATTLE, WA 98111-1247

UNITED STATES PATENT AND TRADEMARK OFFICE

UNITED STATES DEPARTMENT OF COMMERCE
United States Patent and Trademark Office
Address: COMMISSIONER FOR PATENTS
P.O. Box 1450
Alexandria, Virginia 22313-1450
www.uspto.gov

APPLICATION NO.	FILING DATE	FIRST NAMED INVENTOR	ATTORNEY DOCKET NO.	CONFIRMATION NO.
11/852,882	09/10/2007	Junji KAZAMA	Q103603	2067

7590 06/22/2009
SUGHRUE MION, PLLC
2100 PENNSYLVANIA AVENUE, N.W.
SUITE 800
WASHINGTON, DC 20037

EXAMINER
VANDERPUYE, KENNETH N

ART UNIT	PAPER NUMBER
2613	

MAIL DATE	DELIVERY MODE
06/22/2009	PAPER

DECISION GRANTING PETITION UNDER 37 CFR 1.138(d)

The declaration of express abandonment is recognized

This is in response to the petition under 37 CFR 1.138(d), requesting for a refund of any previously paid search fee and excess claims fee in the above-identified application.

The petition is granted.

The express abandonment is recognized. Any previously paid search fee and excess claims fee are hereby refunded.

Telephone inquiries should be directed to the Office of Data Management at (571) 272-4200.

Nioni Farmer

Patent Publication Branch
Office of Data Management

Adjustment date: 06/24/2009 NFARMER
09/11/2007 INTEFSW 00003016 194880 11852882
02 FC:1111 500.00 CR

FORM PET651G (Rev. 08/07)

CERTIFICATE OF MAILING BY EXPRESS MAIL

Express Mail No.: EV 728461655 US
I hereby certify that this paper is being deposited with the United States Postal Service "Express Mail Post Office to Addressee" service under 37 CFR 1.10 on the date indicated below and is addressed to Commissioner for Patents, P.O. Box 1450, Alexandria, VA 22313-1450.

By: Lhet Chuakay Date: October 18, 2006
Lhet Chuakay

PATENT
Attorney Docket No. P-157-US6
Customer No. 27038

IN THE UNITED STATES PATENT AND TRADEMARK OFFICE

In re Patent Application of	)	
	)	
MAMMEN et al.	)	Confirmation No.: Not yet assigned
	)	
Application No.: To be assigned (Continuation of U.S. 10/779,157)	)	Group Art Unit: To be assigned
	)	
	)	Examiner: To be assigned
Filed: On Even Date Herewith	)	
	)	
For: BIPHENYL DERIVATIVES	)	

REQUEST TO CORRECT INVENTORSHIP PURSUANT TO 37 C.F.R. §1.48(b)

Commissioner for Patents
P.O. Box 1450
Washington, D.C. 20231

Sir:

Applicant hereby requests that the inventorship of the above-identified patent application be amended to delete the names of those persons who are not inventors of the presently claimed subject matter.

Specifically, Applicant requests that the inventorship be amended to delete Sarah DUNHAM; Tae Weon LEE; Craig HUSFELD; and Eric STANGELAND. These persons were correctly named as inventors in U.S. Serial No. 10/779,157 (executed

10/20/2006 TPOLITE1 00000048 500344 11582885
01 FC:1464 130.00 DA

declaration enclosed), but they are not inventors of the invention now being claimed in the present application.

The remaining inventors for the present application are Mathai MAMMEN; Adam HUGHES; and Yan CHEN.

The enclosed Fee Transmittal Form accompanying this request authorizes the Commissioner to charge the processing fee set forth in §1.17(i) for this amendment to Deposit Account No. 50-0344. Additionally, the Commissioner is hereby authorized to charge any additional fees required by this paper, or to credit any overpayment, to Deposit Account No. 50-0344.

Respectfully submitted,

THERAVANCE, INC.

Date: October 18, 2006

By: _____
Jeffrey A. Hagenah, Ph.D., Esq.
Reg. No. 35,175
Telephone No. (650) 808-6406

THERAVANCE, INC.
901 Gateway Blvd.
South San Francisco, CA 94080
Telephone: (650) 808-6000
Fax: (650) 808-6078

UNITED STATES PATENT AND TRADEMARK OFFICE

COMMISSIONER FOR PATENTS
UNITED STATES PATENT AND TRADEMARK OFFICE
P.O. BOX 1450
ALEXANDRIA, VA 22313-1450
www.uspto.gov

IRELL & MANELLA LLP
840 NEWPORT CENTER DRIVE
SUITE 400
NEWPORT BEACH CA 92660

COPY MAILED

JUN 21 2007

OFFICE OF PETITIONS

In re Application of Gami, et al. Application No. 11/582,924 Filed: October 17, 2006 Atty. Dkt. No.: 155634-0197(P166) For: UTILIZATION OF THE ACCELERATION ZONE IN AMMONITE SERVO WRITING	DECISION REFUSING STATUS UNDER 37 CFR 1.47(a)

This decision is in response to the petition under 37 CFR 1.47(a) filed April 12, 2007.

The petition under 37 CFR 1.47(a) is **DISMISSED**.

Petitioners are given TWO MONTHS from the mailing date of this decision to reply, correcting the below-noted deficiencies. Any reply should be entitled "Request for Reconsideration of Petition Under 37 CFR 1.47(a)," and should only address the deficiencies noted herein. The reply under 37 CFR 1.47(a) may include an oath or declaration executed by the non-signing inventors. Any extensions of time will be governed by 37 CFR 1.136(a).

The above-identified application was filed October 17, 2006 without an executed oath or declaration. Accordingly, a Notice to File Missing Parts of Nonprovisional Application (Notice) was mailed November 8, 2006. The Notice required a surcharge and an executed oath or declaration.

A grantable petition under 37 CFR 1.47(a) requires: (1) proof that the non-signing inventor cannot be reached or refuses to sign the oath or declaration after having been presented with the application papers (specification, claims and drawings); (2) an acceptable oath or declaration in compliance with 35 U.S.C. §§ 115 and 116; (3) the petition fee; and (4) a statement of the last known address of the non-signing inventor.

The instant petition fails to satisfy requirements (1) and (2) set forth above.

As to item (1), petitioners have failed to establish that the non-signing inventor received a complete copy of the application papers (specification, including claims, drawings, and oath or declaration) and thereafter refused to execute an oath or declaration, or, that the non-signing inventor cannot be reached or located for presentation of the application papers.

Petitioners allege that the non-signing was mailed a copy of a declaration and assignment document and that the non-signing inventor has refused to execute the declaration.

Petitioners are reminded that before a refusal to sign an oath or declaration can be alleged, it must be demonstrated that a *bona fide* effort has been made to present a complete copy of the application papers (specification, including claims, drawings, and oath or declaration) to the non-signing inventor at the non-signing inventor's last known address, typically a residential address.

There is no indication that the non-signing inventor received the complete application papers and thereafter refused to sign the declaration.

Any renewed petition should be accompanied by evidence to establish that the non-signing inventor was sent a complete copy of the application papers (specification, claims, drawings, and oath or declaration) and thereafter refused to execute the declaration. Petitioners may wish to provide the Office copies of letters sent to the inventor indicating the enclosure of the application papers (specification, claims, drawings, and oath or declaration). If after the inventor receives the application papers and requests to execute the oath or declaration are refused, these facts should be set forth in a statement of facts signed by the person to whom the refusals were made and detailing with specificity the exact manner of the refusals. If a written refusal has been made, a copy of the written refusal should be included on renewed petition.

As to item (2), an acceptable oath or declaration for the patent application in compliance with 37 CFR 1.63 and 1.64 has not been presented. The declaration presented is unacceptable as it fails to identify the instant application by application number and filing date.

Correction is required upon renewed petition.

Further correspondence with respect to this matter should be addressed as follows:

By mail: Mail Stop Petition
Commissioner for Patents
P.O. Box 1450
Alexandria, VA 22313-1450

By facsimile: (571) 273-8300

By hand: U.S. U.S. Patent and Trademark Office
Customer Service Window
Mail Stop Petition
Randolph Building
401 Dulany Street
Alexandria, VA 22314

Telephone inquiries related to this decision may be directed to the undersigned at (571) 272-3205.

Alesia M. Brown
Petitions Attorney
Office of Petitions

UNITED STATES PATENT AND TRADEMARK OFFICE

COMMISSIONER FOR PATENTS
UNITED STATES PATENT AND TRADEMARK OFFICE
P.O. BOX 1450
ALEXANDRIA, VA 22313-1450
www.uspto.gov

IRELL & MANELLA LLP
840 NEWPORT CENTER DRIVE
SUITE 400
NEWPORT BEACH CA 92660

COPY MAILED

MAR 24 2008

OFFICE OF PETITIONS

In re Application of	:	DECISION ON PETITION UNDER
Gami, et al.	:	37 CFR 1.137(b)
Application No. 11/582,924	:	
Filed: October 17, 2006	:	
Attorney Docket No. 155634-0197(P166)	:	

This is in response to the petition under 37 CFR 1.137(b), filed January 22, 2008.

The petition is DISMISSED AS MOOT.

The petition under 37 CFR 1.137(b) is inappropriately submitted as at the time of submission of the petition, the period of time for reply to the decision mailed June 21, 2007 was extendible under 37 CFR 1.136(a). The decision set a two month period of time for reply, making a request for reconsideration due on or before August 21, 2007. The period of time for reply was extendible up to five months, making a reply due up to January 21, 2007. However, January 21, 2008 was a federal holiday. Accordingly, the maximum period of time for reply extended to include January 22, 2008, the date that the request for reconsideration under 37 CFR 1.47 was received. It is further noted that the request for reconsideration bore a certificate of mailing date of January 18, 2008. Accordingly, the instant application is not in fact abandoned.

This application is being forwarded to the Office of Patent Application Processing.

The required petition for extension of time fee has been charged to petitioners' deposit account as authorized.

Telephone inquiries regarding this decision should be directed to the undersigned at (571) 272-3205.

Alesia M. Brown
Petitions Attorney
Office of Petitions

UNITED STATES PATENT AND TRADEMARK OFFICE

COMMISSIONER FOR PATENTS
UNITED STATES PATENT AND TRADEMARK OFFICE
P.O. BOX 1450
ALEXANDRIA, VA 22313-1450
www.uspto.gov

IRELL & MANELLA LLP
840 NEWPORT CENTER DRIVE
SUITE 400
NEWPORT BEACH CA 92660

COPY MAILED

MAR 25 2008

OFFICE OF PETITIONS

In re Application of	:	
Gami, et al.	:	DECISION GRANTING STATUS
Application No. 11/582,924	:	UNDER 37 CFR 1.47(a)
Filed: October 17, 2006	:	
Attorney Docket No. 155634-0197(P166)	:	

This is in response to the renewed petition under 37 CFR 1.47(a), filed January 22, 2008.

The petition is GRANTED.

Petitioner has shown that the non-signing inventor has refused to join in the filing of the above-identified application.

The application and papers have been reviewed and found in compliance with 37 CFR 1.47(a). This application is hereby accorded Rule 1.47(a) status.

As provided in 37 CFR 1.47(c), this Office will forward notice of this application's filing to the non-signing inventor at the address given in the petition. Notice of the filing of this application will also be published in the Official Gazette.

This application is being referred to the Office of Initial Patent Examination for pre-examination processing.

Telephone inquiries regarding this decision should be directed to the undersigned at (571) 272-3205.

Alesia M. Brown
Petitions Attorney
Office of Petitions

UNITED STATES PATENT AND TRADEMARK OFFICE

COMMISSIONER FOR PATENTS
UNITED STATES PATENT AND TRADEMARK OFFICE
P.O. BOX 1450
ALEXANDRIA, VA 22313-1450
www.uspto.gov

Yih Hurng Jung
3893 Millar Avenue
Santa Clara, California 95051

COPY MAILED

MAR 2 5 2008

OFFICE OF PETITIONS

In re Application of
Gami, et al.
Application No. 11/582,924
Filed: October 17, 2006
Attorney Docket No. 155634-0197(P166)

Dear Sir:

You are named as a joint inventor in the above-identified United States patent application, filed under the provisions of 35 U.S.C. 116 (United States Code), and 37 CFR 1.47(a), Rules of Practice in Patent Cases. Should a patent be granted on the application you will be designated therein as a joint inventor.

As a named inventor you are entitled to inspect any paper in the file wrapper of the application, order copies of all or any part thereof (at a prepaid cost per 37 CFR 1.19) or make your position of record in the application. Alternatively, you may arrange to do any of the preceding through a registered patent attorney or agent presenting written authorization from you. If you care to join the application, counsel of record (see below) would presumably assist you. Joining the application would entail the filing of an appropriate oath or declaration by you pursuant to 37 CFR 1.63.

Telephone inquiries regarding this communication should be directed to the undersigned at (571) 272-3205. Requests for information regarding your application should be directed to the File Information Unit at (703) 308-2733. Information regarding how to pay for and order a copy of the application, or a specific paper in the application, should be directed to the Certification Division at (571) 272-3150 or 1 (800) 972-6382 (outside the Washington, DC area).

Alesia M. Brown
Petitions Attorney
Office of Petitions

UNITED STATES PATENT AND TRADEMARK OFFICE

Commissioner for Patents
United States Patent and Trademark Office
P.O. Box 1450
Alexandria, VA 22313-1450
www.uspto.gov

THOMAS A MILLER
MILLER, MATTHIAS & HULL
SUITE 2350
ONE NORTH FRANKLIN STREET
CHICAGO, IL 60606

COPY MAILED

DEC 10 2008

In re Application of
Andrew Schamschurin, et al.
Application No. 11/582,933
Filed: October 17, 2006
Attorney Docket No. RPO-P069

DECISION GRANTING PETITION
UNDER 37 CFR 1.137(f)

This is a decision in response to the petition, filed September 12, 2008, under 37 CFR 1.137(f) to revive the instant nonprovisional application for failure to timely notify the U.S. Patent and Trademark (USPTO) of the filing of an application in a foreign country, or under a multinational treaty that requires publication of applications eighteen months after filing.

The petition is **GRANTED**.

Petitioner states that the instant nonprovisional application is the subject of an application filed in an eighteen month publication country on October 16, 2007. However, the USPTO was unintentionally not notified of this filing within 45 days subsequent to the filing of the subject application in an eighteen month publication country.

In view of the above, this application became abandoned pursuant to 35 U.S.C. §122(b)(2)(B)(iii) and 37 CFR 1.213(c) for failure to timely notify the Office of the filing of an application in a foreign country or under a multilateral international agreement that requires publication of applications 18 months after filing.

A petition to revive an application abandoned pursuant to 35 U.S.C. § 122(b)(2)(B)(iii) for failure to notify the USPTO of a foreign filing must be accompanied by:

(1) the required reply which is met by the notification of such filing in a foreign country or under a multinational treaty;
(2) the petition fee as set forth in 37 CFR 1.17(m); and
(3) a statement that the entire delay in filing the required reply from the due date of the reply until the filing of a grantable petition was unintentional.

The petition is found to be in compliance with 37 CFR 1.137(b). Accordingly, the failure to timely notify the USPTO of a foreign or international filing within 45 days after the date of filing of such foreign or international application as provided by 35 U.S.C. § 122(b)(2)(B)(iii) and 37 CFR 1.213(c) is accepted as having been unintentionally delayed.

The previous Request and Certification under 35 U.S.C. § 122(b)(2)(B)(i) has been rescinded. A Notice Regarding Rescission of Nonpublication Request which sets forth the projected publication date of March 12, 2009 accompanies this decision on petition.

Any inquiries concerning this decision may be directed to the undersigned at (571) 272-3204.

This application is being referred to the Technology Center 1796 for further processing..

Sherry D. Brinkley
Petitions Examiner
Office of Petitions

ATTACHMENT: Notice Regarding Rescission of Nonpublication Request

UNITED STATES PATENT AND TRADEMARK OFFICE

UNITED STATES DEPARTMENT OF COMMERCE
United States Patent and Trademark Office
Address: COMMISSIONER FOR PATENTS
P.O. Box 1450
Alexandria, Virginia 22313-1450
www.uspto.gov

APPLICATION NUMBER	FILING OR 371(C) DATE	FIRST NAMED APPLICANT	ATTY. DOCKET NO./TITLE
11/582,933	10/17/2006	Andrew Schamschurin	RPO-P069

CONFIRMATION NO. 2555

Thomas A Miller
Miller, Matthias & Hull
Suite 2350
One North Franklin Street
Chicago, IL 60606

NONPUBLICATION RESCISSION LETTER

OC000000033435236

Date Mailed: 12/04/2008

Communication Regarding Rescission Of Nonpublication Request and/or Notice of Foreign Filing

Applicant's rescission of the previously-filed nonpublication request and/or notice of foreign filing is acknowledged. The paper has been reflected in the Patent and Trademark Office's (USPTO's) computer records so that the earliest possible projected publication date can be assigned.

The projected publication date is 03/12/2009.

If applicant rescinded the nonpublication request before or on the date of "foreign filing,"[1] then no notice of foreign filing is required.

If applicant foreign filed the application after filing the above application and before filing the rescission, and the rescission did not also include a notice of foreign filing, then a notice of foreign filing (not merely a rescission) is required to be filed within 45 days of the date of foreign filing. See 35 U.S.C. § 122(b)(2)(B)(iii), and Clarification of the United States Patent and Trademark Office's Interpretation of the Provisions of 35 U.S.C. § 122(b)(2)(B)(ii)-(iv), 1272 Off. Gaz. Pat. Office 22 (July 1, 2003).

If a notice of foreign filing is required and is not filed within 45 days of the date of foreign filing, then the application becomes abandoned pursuant to 35 U.S.C. § 122(b)(2)(B)(iii). In this situation, applicant should either file a petition to revive or notify the Office that the application is abandoned. See 37 CFR 1.137(f). Any such petition to revive will be forwarded to the Office of Petitions for a decision. Note that the filing of the petition will not operate to stay any period of reply that may be running against the application.

Questions regarding petitions to revive should be directed to the Office of Petitions at (571) 272-3282.

[1] Note, for purpose of this notice, that "foreign filing" means "filing an application directed to the same invention in another country, or under a multilateral international agreement, that requires publication of applications 18 months after filing".

/sdbrinkley/

Office of Data Management, Application Assistance Unit (571) 272-4000, or (571) 272-4200, or 1-888-786-0101

UNITED STATES PATENT AND TRADEMARK OFFICE

UNITED STATES DEPARTMENT OF COMMERCE
United States Patent and Trademark Office
Address: COMMISSIONER FOR PATENTS
P.O. Box 1450
Alexandria, Virginia 22313-1450
www.uspto.gov

Joseph W. Price
SNELL & WILMER L.L.P.
Suite 1400
600 Anton Boulevard
Costa Mesa, CA 92626

Mail Date: 04/21/2010

Applicant	: Minoru Enomoto	: DECISION ON REQUEST FOR
Patent Number	: 7654891	: RECALCULATION of PATENT
Issue Date	: 02/02/2010	: TERM ADJUSTMENT IN VIEW
Appliction No	: 11/582,935	: OF WYETH AND NOTICE OF INTENT TO
Filed	: 10/18/2006	: ISSUE CERTIFICATE OF CORRECTION
		:

The Request for Recalculation is **GRANTED** to the extent indicated.

The patent term adjustment has been determined to be **577** days. The USPTO will *sua sponte* issue a certificate of correction reflecting the amount of PTA days determined by the recalculation.

Prior to the issuance of the certificate of correction, the USPTO will afford patentee an opportunity to be heard and request reconsideration. Accordingly, patentee has **one month or thirty (30) days**, whichever is longer, to file a request for reconsideration of this patent term adjustment calculation. See 35 U.S.C. 154(b)(3)(B)(ii) and 37 CFR 1.322(a)(4). No extensions of time will be granted under 37 CFR 1.136.

Patentee should use document code PET.OP if electronically filing a request for reconsideration of this patent term adjustment calculation. The patentee must also include the information required by 37 CFR 1.705(b)(2) and the fee required by 37 CFR 1.18(e). If patentee does not file a timely request for reconsideration of this patent term adjustment calculation including the information required by 37 CFR 1.705(b)(2) and the fee required by 37 CFR 1.18(e), the USPTO will issue a certificate of correction reflecting the PTA determination noted above.

Patentee should be aware that in order to preserve the right to review in the United States District Court for the District of Columbia of the USPTO patent term adjustment determination, patentee must ensure that he or she also take the steps required under 35 U.S.C. 154(b)(4)(A) in a timely manner. Nothing in the request for recalculation should be construed as providing an alternative time frame for commencing a civil action under 35 U.S.C. 154(b)(4)(A).

Any questions concerning this decision should be directed to the Office of Patent Legal Administration at 571-272-7702.

UNITED STATES PATENT AND TRADEMARK OFFICE

Commissioner for Patents
United States Patent and Trademark Office
P.O. Box 1450
Alexandria, VA 22313-1450
www.uspto.gov

COPY MAILED

SEP 2 1 2009

OFFICE OF PETITIONS

KENYON & KENYON LLP
1500 K STREET N.W.
SUITE 700
WASHINGTON, DC 20005

In re Application of	:	
PICKETT, David F. Jr. et al.	:	
Application No. 11/582,957	:	DECISION ON PETITION
Filed: October 19, 2006	:	TO WITHDRAW
Attorney Docket No. **01628/46502**	:	FROM RECORD
	:	

This is a decision on the Request to Withdraw as attorney or agent of record under 37 C.F.R. § 1.36(b), filed September 03, 2009.

The request is **APPROVED**.

A grantable request to withdraw as attorney/agent of record must be signed by every attorney/agent seeking to withdraw or contain a clear indication that one attorney is signing on behalf of another/others. The Office requires the practitioner(s) requesting withdrawal to certify that he, she, or they have: (1) given reasonable notice to the client, prior to the expiration of the response period, that the practitioner(s) intends to withdraw from employment; (2) delivered to the client or a duly authorized representative of the client all papers and property (including funds) to which the client is entitled; and (3) notified the client of any responses that may be due and the time frame within which the client must respond, pursuant 37 CFR 10.40(c).

The request was signed by Gerard Messina on behalf of all attorneys of record who are associated with customer No. 23838. All attorneys/agents associated with the Customer Number 23838 have been withdrawn. Applicant is reminded that there is no attorney of record at this time.

All future correspondence will be directed to the first named inventor David Pickett at the address indicated below. There is an outstanding Office action mailed August 25, 2009 that requires a reply from the applicant.

Telephone inquiries concerning this decision should be directed to Tredelle Jackson at 571-272-2783.

Tredelle D. Jackson
Paralegal Specialist
Office of Petitions

cc: **DAVID FRANKLIN, JR.**
P.O. BOX 16146
COLORADO SPRINGS CO 80935-6146

UNITED STATES PATENT AND TRADEMARK OFFICE

UNITED STATES DEPARTMENT OF COMMERCE
United States Patent and Trademark Office
Address: COMMISSIONER FOR PATENTS
P.O. Box 1450
Alexandria, Virginia 22313-1450
www.uspto.gov

APPLICATION NO.	FILING DATE	FIRST NAMED INVENTOR	ATTORNEY DOCKET NO.	CONFIRMATION NO.
11/582,975	10/19/2006	Hyung-ho Lee	0001.1253	2775

7590 02/23/2009
STEIN, MCEWEN & BUI, LLP
1400 EYE STREET, NW
SUITE 300
WASHINGTON, DC 20005

EXAMINER
POON, KING Y

ART UNIT	PAPER NUMBER
2625	

MAIL DATE	DELIVERY MODE
02/23/2009	PAPER

DECISION GRANTING PETITION UNDER 37 CFR 1.138(d)

The declaration of express abandonment is recognized

This is in response to the petition under 37 CFR 1.138(d), requesting for a refund of any previously paid search fee and excess claims fee in the above-identified application.

The petition is granted.

The express abandonment is recognized. Any previously paid search fee and excess claims fee are hereby refunded.

Telephone inquiries should be directed to the Office of Data Management at (571) 272-4200.

Patent Publication Branch
Office of Data Management

```
Adjustment date: 02/23/2009  BPOWELL
10/20/2006 SSITHIB1 00000028 11582975
02 FC:1111                    -500.00 OP
04 FC:1201                    -400.00 OP
05 FC:1202                    -600.00 OP
```

```
Replp. Ref: 02/23/2009 BPOWELL  0014515200
DA#:182220   Name/Number:11594089
FC: 9204                      $1000.00 CR
```


FORM PET651G (Rev. 08/07)

Adjustment date: 02/23/2009 BPOWELL
10/20/2006 SSITHIB1 00000028 11582975

02 FC:1111	-500.00 OP
04 FC:1201	-400.00 OP
05 FC:1202	-600.00 OP

UNITED STATES PATENT AND TRADEMARK OFFICE

UNITED STATES DEPARTMENT OF COMMERCE
United States Patent and Trademark Office
Address: COMMISSIONER FOR PATENTS
P.O. Box 1450
Alexandria, Virginia 22313-1450
www.uspto.gov

ROYLANCE, ABRAMS, BERDO & GOODMAN, L.L.P.
1300 19TH STREET, N.W.
SUITE 600
WASHINGTON,, DC 20036

Mail Date: 05/21/2010

Applicant	: Gyeong-ho Park	: DECISION ON REQUEST FOR
Patent Number	: 7668502	: RECALCULATION of PATENT
Issue Date	: 02/23/2010	: TERM ADJUSTMENT IN VIEW
Application No	: 11/582,997	: OF WYETH AND NOTICE OF INTENT TO
Filed	: 10/19/2006	: ISSUE CERTIFICATE OF CORRECTION
		:

The Request for Recalculation is **GRANTED** to the extent indicated.

The patent term adjustment has been determined to be **627** days. The USPTO will *sua sponte* issue a certificate of correction reflecting the amount of PTA days determined by the recalculation.

Prior to the issuance of the certificate of correction, the USPTO will afford patentee an opportunity to be heard and request reconsideration. Accordingly, patentee has **one month or thirty (30) days**, whichever is longer, to file a request for reconsideration of this patent term adjustment calculation. See 35 U.S.C. 154(b)(3)(B)(ii) and 37 CFR 1.322(a)(4). No extensions of time will be granted under 37 CFR 1.136.

Patentee should use document code PET.OP if electronically filing a request for reconsideration of this patent term adjustment calculation. The patentee must also include the information required by 37 CFR 1.705(b)(2) and the fee required by 37 CFR 1.18(e). If patentee does not file a timely request for reconsideration of this patent term adjustment calculation including the information required by 37 CFR 1.705(b)(2) and the fee required by 37 CFR 1.18(e), the USPTO will issue a certificate of correction reflecting the PTA determination noted above.

Patentee should be aware that in order to preserve the right to review in the United States District Court for the District of Columbia of the USPTO patent term adjustment determination, patentee must ensure that he or she also take the steps required under 35 U.S.C. 154(b)(4)(A) in a timely manner. Nothing in the request for recalculation should be construed as providing an alternative time frame for commencing a civil action under 35 U.S.C. 154(b)(4)(A).

Any questions concerning this decision should be directed to the Office of Patent Legal Administration at 571-272-7702.

UNITED STATES PATENT AND TRADEMARK OFFICE

Commissioner for Patents
United States Patent and Trademark Office
P.O. Box 1450
Alexandria, VA 22313-1450
www.uspto.gov

OBLON SPIVAK MCCLELLAND MAIER & NEUSTADT PC
1940 DUKE STREET
ALEXANDRIA VA 22314

COPY MAILED

APR 0 9 2007

OFFICE OF PETITIONS

In re Application of	:	
Steven T. Fink	:	
Application No. 11/583,033	:	DECISION ON PETITION
Filed: October 19, 2006	:	
Attorney Docket No. 29749US26YADIV	:	

This is a decision on the petition under 37 CFR 1.181, filed January 8, 2007, which is being treated as a petition under 37 C.F.R. § 1.53 to accord the above application a filing date of October 19, 2006, with Figure 4 of the drawings as part of the original disclosure.

The petition is **GRANTED**.

Application papers in the above-identified application were filed on October 19, 2006. However, on November 7, 2006, the Initial Patent Examination Division mailed applicant a "Notice of Omitted Item(s) in a Nonprovisional Application". Applicant was notified that the application papers had been accorded a filing date; however, Figure 4 of the drawings appeared to have been omitted.

In response, applicants filed the instant petition on January 8, 2007, made timely in view of 37 CFR 1.7(a). Accompanying the petition was a copy of Figure 4. Applicant maintains that the application as originally filed this drawing figure. In support thereof, applicant submitted a postcard receipt identifying this application, itemizing "Drawings 5 Sheets" as enclosed, bearing a United States Patent and Trademark Office date-stamp of October 19, 2006, and lacking any notation of non-receipt of any item listed.

A postcard receipt which itemizes and properly identifies the items which are being filed serves as *prima facie* evidence of receipt in the Office of all items listed thereon on the date stamped thereon by the Office. See MPEP 503.

Given the basis for granting the petition, the $400 petition fee has been refunded to Deposit Account No. 15-0030.

The application is being forwarded to the Office of Initial Patent Examination (OIPE) for further processing with a filing date of October 19, 2006, using the application papers received in the Office on that date and Figure 4 of the drawings as resupplied on petition filed January 8, 2007.

Telephone inquiries related to this decision should be directed to the undersigned at 571-272-3207.

Cliff Congo
Petitions Attorney
Office of Petitions

UNITED STATES PATENT AND TRADEMARK OFFICE

Commissioner for Patents
United States Patent and Trademark Office
P.O. Box 1450
Alexandria, VA 22313-1450
www.uspto.gov

COPY MAILED

SEP 21 2009

OFFICE OF PETITIONS

STERNE, KESSLER, GOLDSTEIN & FOX
1100 NEW YORK AVENUE, N.W.
WASHINGTON DC 20005

In re Application of	:	
Mark Dale et al	:	
Application No. 11/583,070	:	DECISION GRANTING PETITION
Filed: October 19, 2006	:	UNDER 37 CFR 1.313(c)(2)
Attorney Docket No. 1875.1890001	:	

This is a decision on the petition under 37 CFR 1.313(c)(2), filed September 18, 2009, to withdraw the above-identified application from issue after payment of the issue fee.

The petition is **GRANTED**.

The above-identified application is withdrawn from issue for consideration of a submission under 37 CFR 1.114 (request for continued examination). *See* 37 CFR 1.313(c)(2).

Petitioner is advised that the issue fee paid on September 3, 2009 cannot be refunded. If, however, this application is again allowed, petitioner may request that it be applied towards the issue fee required by the new Notice of Allowance.[1]

Telephone inquiries should be directed to the undersigned at (571) 272-3208.

This application is being referred to Technology Center AU 2618 for processing of the request for continued examination under 37 CFR 1.114 and for consideration of the concurrently filed IDS.

/Karen Creasy/
Karen Creasy
Petitions Examiner
Office of Petitions

---

[1] *The request to apply the issue fee to the new Notice may be satisfied by completing and returning the new Part B – Fee(s) Transmittal Form (along with any balance due at the time of submission). Petitioner is advised that the Issue Fee Transmittal Form must be completed and timely submitted to avoid abandonment of the application.*

UNITED STATES PATENT AND TRADEMARK OFFICE

UNITED STATES DEPARTMENT OF COMMERCE
United States Patent and Trademark Office
Address: COMMISSIONER FOR PATENTS
P.O. Box 1450
Alexandria, Virginia 22313-1450
www.uspto.gov

BACON & THOMAS, PLLC
625 SLATERS LANE
FOURTH FLOOR
ALEXANDRIA, VA 22314-1176

Mail Date: 06/03/2010

Applicant	: Bo-Wei Chen	: DECISION ON REQUEST FOR
Patent Number	: 7626270	: RECALCULATION of PATENT
Issue Date	: 12/01/2009	: TERM ADJUSTMENT IN VIEW
Application No	: 11/583,082	: OF WYETH AND NOTICE OF INTENT TO
Filed	: 10/19/2006	: ISSUE CERTIFICATE OF CORRECTION
		:

The Request for Recalculation is **GRANTED** to the extent indicated.

The patent term adjustment has been determined to be **191** days. The USPTO will *sua sponte* issue a certificate of correction reflecting the amount of PTA days determined by the recalculation.

Prior to the issuance of the certificate of correction, the USPTO will afford patentee an opportunity to be heard and request reconsideration. Accordingly, patentee has **one month or thirty (30) days**, whichever is longer, to file a request for reconsideration of this patent term adjustment calculation. See 35 U.S.C. 154(b)(3)(B)(ii) and 37 CFR 1.322(a)(4). No extensions of time will be granted under 37 CFR 1.136.

Patentee should use document code PET.OP if electronically filing a request for reconsideration of this patent term adjustment calculation. The patentee must also include the information required by 37 CFR 1.705(b)(2) and the fee required by 37 CFR 1.18(e). If patentee does not file a timely request for reconsideration of this patent term adjustment calculation including the information required by 37 CFR 1.705(b)(2) and the fee required by 37 CFR 1.18(e), the USPTO will issue a certificate of correction reflecting the PTA determination noted above.

Patentee should be aware that in order to preserve the right to review in the United States District Court for the District of Columbia of the USPTO patent term adjustment determination, patentee must ensure that he or she also take the steps required under 35 U.S.C. 154(b)(4)(A) in a timely manner. Nothing in the request for recalculation should be construed as providing an alternative time frame for commencing a civil action under 35 U.S.C. 154(b)(4)(A).

Any questions concerning this decision should be directed to the Office of Patent Legal Administration at 571-272-7702.

10 FEB 2009

UNITED STATES PATENT AND TRADEMARK OFFICE

Commissioner for Patents
United States Patent and Trademark Office
P.O. Box 1450
Alexandria, VA 22313-1450
www.uspto.gov

HUNTON & WILLIAMS LLP
INTELLECTUAL PROPERTY DEPARTMENT
1900 K STREET, N.W.
SUITE 1200
WASHINGTON DC 20006-1109

In re Application of	:
Xiaodong Li, et al.	: DECISION ON PETITIONS
Application No. 11/583,097	: UNDER 37 CFR 1.78(a)(3) AND
Filed: October 19, 2006	: UNDER 37 CFR 1.78(a)(6)
Attorney Docket No. 67824.700301	:

This is a decision on the "Petition For Acceptance of an Unintentionally Delayed Claim For Priority Under 35 U.S.C. 120" filed 08 December 2008, to accept an unintentionally delayed claim under 35 U.S.C. §§ 120 and 119(e) for the benefit of the prior-filed nonprovisional and provisional applications. The petition is being treated as a petition under 37 CFR §§ 1.78(a)(3) and 1.78(a)(6). Applicant has provided payment of the petition fee.

The petition is **DISMISSED**.

The present nonprovisional application was filed after November 29, 2000, and the claim herein for the benefit of priority to the prior-filed nonprovisional applications is submitted after expiration of the period specified in 37 CFR 1.78(a)(2)(ii) and 1.78(a)(5)(ii). Therefore, this is a proper petition under 37 CFR 1.78(a)(3) and 1.78(a)(6).

A petition for acceptance of a claim for late priority under 37 CFR §§ 1.78(a)(3) and 1.78(a)(6) is only applicable to those applications filed on or after November 29, 2000. Further, the petition is appropriate only after the expiration of the period specified in 37 CFR §§ 1.78(a)(2)(ii) and 1.78(a)(5)(ii). In addition, the petition under 37 CFR §§ 1.78(a)(3) and 1.78(a)(6) must be accompanied by:

(1) the reference required by 35 U.S.C. §§ 120 and 119(e) and 37 CFR §§ 1.78(a)(2)(i) and 1.78(a)(5)(i) of the prior-filed application, unless previously submitted;

(2) the surcharge set forth in § 1.17(t); and

(3) a statement that the entire delay between the date the claim was due under 37 CFR §§ 1.78(a)(2)(ii) and 1.78(a)(5)(ii) and the date the claim was filed was unintentional. The Commissioner may require additional where there is a question whether the delay was unintentional.

The petition fails to comply with item (1) above in that applicant has failed to provide an amendment to the first sentence(s) of the specification (37 CFR 1.121) or a supplemental application data sheet (37 CFR 1.76) adding the priority claims.

Accordingly, before the petition under 37 CFR §§ 1.78(a)(3) and 1.78(a)(6) can be granted, a renewed petition under 37 CFR §§ 1.78(a)(3) and 1.78(a)(6) and a substitute amendment[1] deleting the improper incorporation by reference statement is required.

Further correspondence with respect to this matter should be addressed as follows:

By mail: Mail Stop PCT
Commissioner for Patents
Post Office Box 1450
Alexandria, VA 22313-1450

By hand: Customer Service Window
Mail Stop PCT
Randolph Building
401 Dulany Street
Alexandria, VA 22314

By fax: (571) 273-4259
ATTN: Office of PCT Legal Administration

Any questions concerning this matter may be directed to Derek A. Putonen at (571) 272-3294.

Boris Milef
Senior Legal Examiner
Office of PCT Legal Administration

[1] *Note* 37 CFR 1.121

UNITED STATES PATENT AND TRADEMARK OFFICE

Commissioner for Patents
United States Patent and Trademark Office
P.O. Box 1450
Alexandria, VA 22313-1450
www.uspto.gov

29 APR 2009

HUNTON & WILLIAMS LLP
INTELLECTUAL PROPERTY DEPARTMENT
1900 K STREET, N.W.
SUITE 1200
WASHINGTON DC 20006-1109

In re Application of	:
Xiaodong Li, et al.	: DECISION ON PETITIONS
Application No. 11/583,097	: UNDER 37 CFR 1.78(a)(3) AND
Filed: October 19, 2006	: UNDER 37 CFR 1.78(a)(6)
Attorney Docket No. 67824.700301	:

This is a decision on the "Request for Reconsideration of Petition For Acceptance of an Unintentionally Delayed Claim For Priority Under 35 U.S.C. 120" filed 06 March 2009, to accept an unintentionally delayed claim under 35 U.S.C. §§ 120 and 119(e) for the benefit of the prior-filed nonprovisional and provisional applications. The petition is being treated as a renewed petition under 37 CFR §§ 1.78(a)(3) and 1.78(a)(6). Applicant previously provided payment of the petition fee and no additional petition fee is required.

The renewed petition is **DISMISSED**.

The present nonprovisional application was filed after November 29, 2000, and the claim herein for the benefit of priority to the prior-filed nonprovisional applications is submitted after expiration of the period specified in 37 CFR 1.78(a)(2)(ii) and 1.78(a)(5)(ii). Therefore, this is a proper petition under 37 CFR 1.78(a)(3) and 1.78(a)(6).

A petition for acceptance of a claim for late priority under 37 CFR §§ 1.78(a)(3) and 1.78(a)(6) is only applicable to those applications filed on or after November 29, 2000. Further, the petition is appropriate only after the expiration of the period specified in 37 CFR §§ 1.78(a)(2)(ii) and 1.78(a)(5)(ii). In addition, the petition under 37 CFR §§ 1.78(a)(3) and 1.78(a)(6) must be accompanied by:

(1) the reference required by 35 U.S.C. §§ 120 and 119(e) and 37 CFR §§ 1.78(a)(2)(i) and 1.78(a)(5)(i) of the prior-filed application, unless previously submitted;

(2) the surcharge set forth in § 1.17(t); and

(3) a statement that the entire delay between the date the claim was due under 37 CFR §§ 1.78(a)(2)(ii) and 1.78(a)(5)(ii) and the date the claim was filed was unintentional. The Commissioner may require additional where there is a question whether the delay was unintentional.

The petition does not comply with item (1) above.

The reference to add the prior-filed applications on page one following the first sentence of the specification is not acceptable as drafted since it improperly incorporates by reference the prior-filed applications. An incorporation by reference statement added after an application's filing date is not effective because no new matter can be added to an application after its filing date (see 35 U.S.C. § 132(a)). If an incorporation by reference statement is included in an amendment to the specification to add a benefit claim under 35 U.S.C. § 120 after the filing date of the application, the amendment would not be proper. When a benefit claim under 35 U.S.C. § 120 is submitted after the filing of an application, the reference to the prior application cannot include an incorporation by reference statement of the prior application. See Dart Industries v. Banner, 636 F.2d 684, 207 USPQ 273 (C.A.D.C. 1980). Note MPEP §§ 201.06(c) and 608.04(b).

Accordingly, before the petition under 37 CFR §§ 1.78(a)(3) and 1.78(a)(6) can be granted, a renewed petition under 37 CFR §§ 1.78(a)(3) and 1.78(a)(6) and a substitute amendment[1] deleting the improper incorporation by reference statement is required.

Further correspondence with respect to this matter should be addressed as follows:

By mail: Mail Stop PCT
Commissioner for Patents
Post Office Box 1450
Alexandria, VA 22313-1450

By hand: Customer Service Window
Mail Stop PCT
Randolph Building
401 Dulany Street
Alexandria, VA 22314

By fax: (571) 273-4259
ATTN: Office of PCT Legal Administration

[1] *Note* 37 CFR 1.121

Any questions concerning this matter may be directed to Derek A. Putonen at (571) 272-3294.

BryanLin

Bryan Lin
Legal Examiner
Office of PCT Legal Administration

2 3 FEB 2010

UNITED STATES PATENT AND TRADEMARK OFFICE

Commissioner for Patents
United States Patent and Trademark Office
P.O. Box 1450
Alexandria, VA 22313-1450
www.uspto.gov

HUNTON & WILLIAMS LLP
INTELLECTUAL PROPERTY DEPARTMENT
1900 K STREET, N.W.
SUITE 1200
WASHINGTON DC 20006-1109

In re Application of	:
Xiaodong Li, et al.	: DECISION ON PETITIONS
Application No. 11/583,097	: UNDER 37 CFR 1.78(a)(3) AND
Filed: October 19, 2006	: UNDER 37 CFR 1.78(a)(6)
Attorney Docket No. 67824.700301	:

This is a decision on the "Request for Reconsideration of Petition For Acceptance of an Unintentionally Delayed Claim For Priority Under 35 U.S.C. 120" filed 06 November 2009, to accept an unintentionally delayed claim under 35 U.S.C. §§ 120 and 119(e) for the benefit of the prior-filed nonprovisional and provisional applications. The petition is being treated as a renewed petition under 37 CFR §§ 1.78(a)(3) and 1.78(a)(6). Applicant previously provided payment of the petition fee and no additional petition fee is required.

The renewed petition is **DISMISSED**.

The present nonprovisional application was filed after November 29, 2000, and the claim herein for the benefit of priority to the prior-filed nonprovisional applications is submitted after expiration of the period specified in 37 CFR 1.78(a)(2)(ii) and 1.78(a)(5)(ii). Therefore, this is a proper petition under 37 CFR 1.78(a)(3) and 1.78(a)(6).

A petition for acceptance of a claim for late priority under 37 CFR §§ 1.78(a)(3) and 1.78(a)(6) is only applicable to those applications filed on or after November 29, 2000. Further, the petition is appropriate only after the expiration of the period specified in 37 CFR §§ 1.78(a)(2)(ii) and 1.78(a)(5)(ii). In addition, the petition under 37 CFR §§ 1.78(a)(3) and 1.78(a)(6) must be accompanied by:

(1) the reference required by 35 U.S.C. §§ 120 and 119(e) and 37 CFR §§ 1.78(a)(2)(i) and 1.78(a)(5)(i) of the prior-filed application, unless previously submitted;
(2) the surcharge set forth in § 1.17(t); and
(3) a statement that the entire delay between the date the claim was due under 37 CFR §§ 1.78(a)(2)(ii) and 1.78(a)(5)(ii) and the date the claim was filed was unintentional. The Commissioner may require additional where there is a question whether the delay was unintentional.

The petition does not comply with item (1) above.

The reference to add the prior-filed applications on page one following the first sentence of the specification is not acceptable as drafted. The amendment contains an improper benefit claim in that it identifies the application as a continuation-in-part of a later filed application; specifically U.S. application serial number 11/879,364 filed on July 17, 2007.

Accordingly, before the petition under 37 CFR §§ 1.78(a)(3) and 1.78(a)(6) can be granted, a renewed petition under 37 CFR §§ 1.78(a)(3) and 1.78(a)(6) and a substitute amendment Note 37 CFR 1.121 deleting the improper incorporation by reference statement is required.

Further correspondence with respect to this matter should be addressed as follows:

By mail: Mail Stop PCT
Commissioner for Patents
Post Office Box 1450
Alexandria, VA 22313-1450

By hand: Customer Service Window
Mail Stop PCT
Randolph Building
401 Dulany Street
Alexandria, VA 22314

By fax: (571) 273-4259
ATTN: Office of PCT Legal Administration

Any questions concerning this matter may be directed to Derek A. Putonen at (571) 272-3294.

Bryan Lin
Legal Examiner
Office of PCT Legal Administration

UNITED STATES PATENT AND TRADEMARK OFFICE

Commissioner for Patents
United States Patent and Trademark Office
P.O. Box 1450
Alexandria, VA 22313-1450
www.uspto.gov

2 6 MAY 2010

HUNTON & WILLIAMS LLP
INTELLECTUAL PROPERTY DEPARTMENT
1900 K STREET, N.W.
SUITE 1200
WASHINGTON DC 20006-1109

In re Application of	:
Xiaodong Li, et al.	: DECISION ON PETITIONS
Application No. 11/583,097	: UNDER 37 CFR 1.78(a)(3) AND
Filed: October 19, 2006	: UNDER 37 CFR 1.78(a)(6)
Attorney Docket No. 67824.700301	:

This is a decision on the "Second Renewed Request for Reconsideration of Petition For Acceptance of an Unintentionally Delayed Claim For Priority Under 37 CFR §§ 1.78(a)(3) and 1.78(a)(6)" for the benefit of the prior-filed applications set forth in the concurrently filed amendment filed 30 March 2010. Applicant previously provided payment of the petition fee and no additional petition fee is required.

The renewed petition is **DISMISSED**.

The present nonprovisional application was filed after November 29, 2000, and the claim herein for the benefit of priority to the prior-filed nonprovisional applications is submitted after expiration of the period specified in 37 CFR 1.78(a)(2)(ii) and 1.78(a)(5)(ii). Therefore, this is a proper petition under 37 CFR 1.78(a)(3) and 1.78(a)(6).

A petition for acceptance of a claim for late priority under 37 CFR §§ 1.78(a)(3) and 1.78(a)(6) is only applicable to those applications filed on or after November 29, 2000. Further, the petition is appropriate only after the expiration of the period specified in 37 CFR §§ 1.78(a)(2)(ii) and 1.78(a)(5)(ii). In addition, the petition under 37 CFR §§ 1.78(a)(3) and 1.78(a)(6) must be accompanied by:

(1) the reference required by 35 U.S.C. §§ 120 and 119(e) and 37 CFR §§ 1.78(a)(2)(i) and 1.78(a)(5)(i) of the prior-filed application, unless previously submitted;
(2) the surcharge set forth in § 1.17(t); and
(3) a statement that the entire delay between the date the claim was due under 37 CFR §§ 1.78(a)(2)(ii) and 1.78(a)(5)(ii) and the date the claim was filed was unintentional. The Commissioner may require additional where there is a question whether the delay was unintentional.

The petition does not comply with item (1) above.

The reference to add the prior-filed applications on page one following the first sentence of the specification is not acceptable as drafted. The amendment contains an improper benefit claim in that it lists international application PCT/US2004/025459 as having a priority claim to U.S. provisional application 60/552,069 filed on March 9, 2004 and U.S. provisional application 60/494,071 filed on August 6, 2003 . In fact, the second of the priority claims is U.S. provisional application 60/552,064 filed on March 9, 2004.

Accordingly, before the petition under 37 CFR §§ 1.78(a)(3) and 1.78(a)(6) can be granted, a renewed petition under 37 CFR §§ 1.78(a)(3) and 1.78(a)(6) and a substitute amendment provided. It is noted that the amendment is proper as drafted as to the petition under 37 CFR 1.78(a)(3).

Further correspondence with respect to this matter should be addressed as follows:

By mail: Mail Stop PCT
Commissioner for Patents
Post Office Box 1450
Alexandria, VA 22313-1450

By hand: Customer Service Window
Mail Stop PCT
Randolph Building
401 Dulany Street
Alexandria, VA 22314

By fax: (571) 273-4259
ATTN: Office of PCT Legal Administration

Any questions concerning this matter may be directed to Derek A. Putonen at (571) 272-3294.

Bryan Lin

Bryan Lin
Legal Examiner
Office of PCT Legal Administration

UNITED STATES PATENT AND TRADEMARK OFFICE

Commissioner for Patents
United States Patent and Trademark Office
P.O. Box 1450
Alexandria, VA 22313-1450
www.uspto.gov

BRACEWELL & GIULIANI LLP
P.O. BOX 61389
HOUSTON, TX 77208-1389

COPY MAILED
MAR 15 2010

In re Application of	:	
Ruedger RUBBERT, et *al.*	:	
Application No. 11/583,103	:	DECISION GRANTING PETITION
Filed: October 18, 2006	:	UNDER 37 CFR 1.313(c)(2)
Attorney Docket No. **064477.000019**	:	

This is a decision on the petition under 37 CFR 1.313(c)(2), filed March 12, 2010, to withdraw the above-identified application from issue after payment of the issue fee.

The petition is **GRANTED**.

The above-identified application is withdrawn from issue for consideration of a submission under 37 CFR 1.114 (request for continued examination). *See* 37 CFR 1.313(c)(2).

Petitioner is advised that the issue fee paid on December 31, 2009 cannot be refunded. If, however, this application is again allowed, petitioner may request that it be applied towards the issue fee required by the new Notice of Allowance.[1]

Telephone inquiries should be directed to the undersigned at (571) 272-7253.

This application is being referred to Technology Center AU 2121 for processing of the request for continued examination under 37 CFR 1.114 and for consideration of the concurrently filed information disclosure statement.

/Monica A. Graves/
Petitions Examiner, Office of Petitions

---

[1] *The request to apply the issue fee to the new Notice may be satisfied by completing and returning the new Part B – Fee(s) Transmittal Form (along with any balance due at the time of submission). Petitioner is advised that the Issue Fee Transmittal Form* ***must*** *be completed and timely submitted to avoid abandonment of the application.*

UNITED STATES PATENT AND TRADEMARK OFFICE

UNITED STATES DEPARTMENT OF COMMERCE
United States Patent and Trademark Office
Address: COMMISSIONER FOR PATENTS
P.O. Box 1450
Alexandria, Virginia 22313-1450
www.uspto.gov

ROBERT E. BUSHNELL & LAW FIRM
2029 K STREET NW
SUITE 600
WASHINGTON, DC 20006-1004

Mail Date: 04/20/2010

Applicant	: Se-Wook Seo	: DECISION ON REQUEST FOR
Patent Number	: 7602144	: RECALCULATION of PATENT
Issue Date	: 10/13/2009	: TERM ADJUSTMENT IN VIEW
Appliction No	: 11/583,113	: OF WYETH AND NOTICE OF INTENT TO
Filed	: 10/19/2006	: ISSUE CERTIFICATE OF CORRECTION
		:

The Request for Recalculation is **GRANTED** to the extent indicated.

The patent term adjustment has been determined to be **175** days. The USPTO will *sua sponte* issue a certificate of correction reflecting the amount of PTA days determined by the recalculation.

Prior to the issuance of the certificate of correction, the USPTO will afford patentee an opportunity to be heard and request reconsideration. Accordingly, patentee has **one month or thirty (30) days**, whichever is longer, to file a request for reconsideration of this patent term adjustment calculation. See 35 U.S.C. 154(b)(3)(B)(ii) and 37 CFR 1.322(a)(4). No extensions of time will be granted under 37 CFR 1.136.

Patentee should use document code PET.OP if electronically filing a request for reconsideration of this patent term adjustment calculation. The patentee must also include the information required by 37 CFR 1.705(b)(2) and the fee required by 37 CFR 1.18(e). If patentee does not file a timely request for reconsideration of this patent term adjustment calculation including the information required by 37 CFR 1.705(b)(2) and the fee required by 37 CFR 1.18(e), the USPTO will issue a certificate of correction reflecting the PTA determination noted above.

Patentee should be aware that in order to preserve the right to review in the United States District Court for the District of Columbia of the USPTO patent term adjustment determination, patentee must ensure that he or she also take the steps required under 35 U.S.C. 154(b)(4)(A) in a timely manner. Nothing in the request for recalculation should be construed as providing an alternative time frame for commencing a civil action under 35 U.S.C. 154(b)(4)(A).

Any questions concerning this decision should be directed to the Office of Patent Legal Administration at 571-272-7702.

UNITED STATES PATENT AND TRADEMARK OFFICE

Commissioner for Patents
United States Patent and Trademark Office
P.O. Box 1450
Alexandria, VA 22313-1450
www.uspto.gov

JJGJR.: 09-07

Paper No: __

COPY MAILED

OCT 01 2007

OFFICE OF PETITIONS

EITAN LAW GROUP
C/O LANDON IP INC.
SUITE 450
1700 DIAGONAL ROAD
ALEXANDRIA VA 22314

In re Application of	:	
Grinberg, et al.	:	
Application No. 11/583,146	:	ON PETITION
Filed: 19 October, 2006	:	
Attorney Docket No. P-9590-US	:	

This is a decision on the petition filed on 2 May, 2007, under 37 C.F.R. §1.47(a).

The Office regrets the delay in addressing this matter, however, the instant petition was presented to the attorneys in the Office of Petitions only at this writing.[1]

For the reasons set forth below, the petition under 37 C.F.R. §1.47(a) is **DISMISSED**.

NOTES:

(1) Any reply must include a renewed petition (and fee) must include a petition under

[1] **NOTE: Monitoring of the status of applications on PAIR can inform one's management of application responses and provide an indication when mailings of Office actions should be expected. Status Inquiries filed at three (3) or four (4) month intervals provide a demonstration of diligence and attention in supporting a petition seeking relief under 37 C.F.R. §1.181.**

37 C.F.R. §1.47 and must be submitted within two (2) months from the mail date of this decision. Extensions of time under 37 C.F.R. §1.136(a) are permitted. The reconsideration request should include a cover letter entitled "Petition under 37 C.F.R. §1.47";

(2) Thereafter, there will be no further reconsideration of this matter.

BACKGROUND

The record indicates:

- the instant application was filed on 19 October, 2006, without, *inter alia*, a fully executed oath/declaration;
- on 7 November, 2006, the Office mailed a Notice of Missing Parts indicating, *inter alia*, that a fully executed oath/declaration (signed and dated) was required;
- on 2 May, 2007, Petitioner Allan C. Entis (Reg. No. 52,866) filed, *inter alia*, the instant petition, an oath/declaration signed by Messrs. Harpaz, Govrin, Hasidi and Machtei (for themselves and on behalf of) but not the non-signing co-inventor Tsafrir Grinberg (Mr. Grinberg), and what is styled as a statement but in fact is a letter from an officer of the averred assignee indicating an attempt to obtain Mr. Grinberg's signature on the oath/declaration, but absolutely no evidence of a diligent effort to ascertain a current/reasonably believed to be valid or last know mailing address and to transmit to the non-signing inventor (with a copy of a transmittal letter (and certified translation thereof if necessary) evidencing that) the entire application (description, claims, abstract and drawings).

Out of an abundance of caution, Petitioners always are reminded that those registered to practice *and* all others who make representations before the Office are to inquire into the underlying facts of representations made to the Office and support averments with the appropriate documentation–since all owe to the Office the continuing duty to disclose.[2]

---

[2] See supplement of 17 June, 1999. The Patent and Trademark Office is relying on petitioner's duty of candor and good faith and accepting a statement made by Petitioner. See Changes to Patent Practice and Procedure, 62 Fed. Reg. at 53160 and 53178, 1203 Off. Gaz. Pat. Office at 88 and 103 (responses to comments 64 and 109)(applicant obligated under 37 C.F.R. §10.18 to inquire into the underlying facts and circumstances when providing statements to the Patent and Trademark Office).

Specifically, the regulations at 37 C.F.R. §10.18 provide:

§ 10.18 Signature and certificate for correspondence filed in the Patent and Trademark Office.
(a) For all documents filed in the Office in patent, trademark, and other non-patent matters, except for correspondence that is required to be signed by the applicant or party, each piece of correspondence filed by a practitioner in the Patent and Trademark Office must bear a signature by such practitioner complying with the provisions of §1.4(d), §1.4(e), or § 2.193(c)(1) of this chapter.

ANALYSIS

The regulations at 37 C.F.R. §1.47 provide in pertinent part:

> **§ 1.47 Filing when an inventor refuses to sign or cannot be reached.**
> (a) If a joint inventor refuses to join in an application for patent or cannot be found or reached after diligent effort, the application may be made by the other inventor on behalf of himself or herself and the nonsigning inventor. The oath or declaration in such an application must be accompanied by a petition including proof of the pertinent facts, the fee set forth in § 1.17(h), and the last known address of the nonsigning inventor. The nonsigning inventor may subsequently join in the application by filing an oath or declaration complying with §1.63.
> * * *

The regulations at 37 C.F.R. §1.63 provide in pertinent part:

> **§1.63 Oath or declaration.**
>
> (b) In addition to meeting the requirements of paragraph (a)of this section, the

---

(b) By presenting to the Office (whether by signing, filing, submitting, or later advocating) any paper, the party presenting such paper, whether a practitioner or non-practitioner, is certifying that—

(1) All statements made therein of the party's own knowledge are true, all statements made therein on information and belief are believed to be true, and all statements made therein are made with the knowledge that whoever, in any matter within the jurisdiction of the Patent and Trademark Office, knowingly and willfully falsifies, conceals, or covers up by any trick, scheme, or device a material fact, or makes any false, fictitious or fraudulent statements or representations, or makes or uses any false writing or document knowing the same to contain any false, fictitious or fraudulent statement or entry, shall be subject to the penalties set forth under 18 U.S.C. 1001, and that violations of this paragraph may jeopardize the validity of the application or document, or the validity or enforceability of any patent, trademark registration, or certificate resulting therefrom; and

(2) To the best of the party's knowledge, information and belief, formed after an inquiry reasonable under the circumstances, that —

(i) The paper is not being presented for any improper purpose, such as to harass someone or to cause unnecessary delay or needless increase in the cost of prosecution before the Office;

(ii) The claims and other legal contentions therein are warranted by existing law or by a nonfrivolous argument for the extension, modification, or reversal of existing law or the establishment of new law;

(iii) The allegations and other factual contentions have evidentiary support or, if specifically so identified, are likely to have evidentiary support after a reasonable opportunity for further investigation or discovery; and

(iv) The denials of factual contentions are warranted on the evidence, or if specifically so identified, are reasonably based on a lack of information or belief.

(c) Violations of paragraph (b)(1) of this section by a practitioner or non-practitioner may jeopardize the validity of the application or document, or the validity or enforceability of any patent, trademark registration, or certificate resulting therefrom. Violations of any of paragraphs (b)(2)(i) through (iv) of this section are, after notice and reasonable opportunity to respond, subject to such sanctions as deemed appropriate by the Commissioner, or the Commissioner's designee, which may include, but are not limited to, any combination of —

(1) Holding certain facts to have been established;
(2) Returning papers;
(3) Precluding a party from filing a paper, or presenting or contesting an issue;
(4) Imposing a monetary sanction;
(5) Requiring a terminal disclaimer for the period of the delay; or
(6) Terminating the proceedings in the Patent and Trademark Office.

(d) Any practitioner violating the provisions of this section may also be subject to disciplinary action. See § 10.23(c)(15).

[Added 50 FR 5175, Feb. 6, 1985, effective Mar. 8, 1985; para. (a) revised, 58 FR 54494, Oct. 22, 1993, effective Nov. 22, 1993; paras. (a) & (b) revised, paras. (c) & (d) added, 62 FR 53131, Oct. 10, 1997, effective Dec. 1, 1997; para. (a) revised, 69 FR 56481, Sept. 21, 2004, effective Oct. 21, 2004]

oath or declaration must also:

(1)Identify the application to which it is directed;

(2) State that the person making the oath or declaration has reviewed and understands the contents of the application, Including the claims, as amended by any amendment specifically referred to in the oath or declaration; and

(3) State that the person making the oath or declaration acknowledges the duty to disclose to the Office all information known to the person to be material to patentability as defined in § 1.56.

When one alleges a refusal of the inventor to sign the application papers, the circumstances of the presentation of the application papers and of the refusal must be specified in a statement of facts by the person who, *inter alia*, presented the inventor with the application papers and/or to whom the refusal was made.

The commentary at MPEP §409.03(d) provides:

409.03(d) Proof of Unavailability or Refusal

INVENTOR CANNOT BE REACHED

Where inability to find or reach a nonsigning inventor "after diligent effort" is the reason for filing under 37 C.F.R. §1.47, a statement of facts should be submitted that fully describes the exact facts which are relied on to establish that a diligent effort was made.

The fact that a nonsigning inventor is on vacation or out of town and is therefore temporarily unavailable to sign the declaration is not an acceptable reason for filing under 37 C.F.R. §1.47.

Furthermore, the fact that an inventor is hospitalized and/or is not conscious is not an acceptable reason for filing under 37 C.F.R. §1.47. 37 C.F.R. §1.43 may be available under these circumstances. See MPEP §409.02. Such a petition under 37 C.F.R. §1.47 will be dismissed as inappropriate.

The statement of facts must be signed, where at all possible, by a person having firsthand knowledge of the facts recited therein. Statements based on hearsay will not normally be accepted. Copies of documentary evidence such as internet

searches, certified mail return receipts, cover letters of instructions, telegrams, that support a finding that the nonsigning inventor could not be found or reached should be made part of the statement. The steps taken to locate the whereabouts of the nonsigning inventor should be included statement of facts. It is important that the statement contain facts as opposed to conclusions.

REFUSAL TO JOIN

A refusal by an inventor to sign an oath or declaration when the inventor has not been presented with the application papers does not itself suggest that the inventor is refusing to join the application unless it is clear that the inventor understands exactly what he or she is being asked to sign and refuses to accept the application papers. A copy of the application papers should be sent to the last known address of the nonsigning inventor, or, if the nonsigning inventor is represented by counsel, to the address of the nonsigning inventor's attorney. The fact that an application may contain proprietary information does not relieve the 37 C.F.R. §1.47 applicant of the responsibility to present the application papers to the inventor if the inventor is willing to receive the papers in order to sign the oath or declaration. It is noted that the inventor may obtain a complete copy of the application, unless the inventor has assigned his or her interest in the application, and the assignee has requested that the inventor not be permitted access. See MPEP §106. It is reasonable to require that the inventor be presented with the application papers before a petition under 37 C.F.R. §1.47 is granted since such a procedure ensures that the inventor is apprised of the application to which the oath or declaration is directed. In re Gray, 115 USPQ 80 (Comm'r Pat. 1956).

Where a refusal of the inventor to sign the application papers is alleged, the circumstances of the presentation of the application papers and of the refusal must be specified in a statement of facts by the person who presented the inventor with the application papers and/or to whom the refusal was made. Statements by a party not present when an oral refusal is made will not be accepted.

Proof that a bona fide attempt was made to present a copy of the application papers (specification, including claims, drawings, and oath or declaration) to the nonsigning inventor for signature, but the inventor refused to accept delivery of the papers or expressly stated that the application papers should not be sent, may be sufficient.

When there is an express oral refusal, that fact along with the time and place of the refusal must be stated in the statement of facts. When there is an express written refusal, a copy of the document evidencing that refusal must be made part of the statement of facts. The document may be redacted to remove material not

> related to the inventor's reasons for refusal.
>
> When it is concluded by the 37 C.F.R. §1.47 applicant that a nonsigning inventor's conduct constitutes a refusal, all facts upon which that conclusion is based should be stated in the statement of facts in support of the petition or directly in the petition. If there is documentary evidence to support facts alleged in the petition or in any statement of facts, such evidence should be submitted. Whenever a nonsigning inventor gives a reason for refusing to sign the application oath or declaration, that reason should be stated in the petition.

Thus, not only must a copy of the entire application must be sent to the last known address of the non-signing inventor (or the estate representative) with a request that he/she sign the declaration for the patent application–and evidence of that transmittal submitted–but also a reasonable effort must be made to ascertain a current or last known address, and the petition (with fee) must state over the signature and registration number of the Petitioner the last known address and, if appropriate, evidence of the due diligence effort ascertaining same.

Alternatively, an oath or declaration for the patent application in compliance with 37 C.F.R. §§1.63 and 1.64 must be presented.

(The declaration must set forth the inventor's residence, citizenship and post office address. An oath or declaration in compliance with 37 C.F.R. §§1.63 and 1.64 signed by the Rule 1.47 applicant is required.[3])

Petitioner's attention is directed to the discussion in the BACKGROUND and ANALYSIS, above, and should ensure that the deficiencies addressed there are corrected with any future petition herein and that a copy of the transmittal letter forwarding the entire application (description, claims, abstract and drawings) to, and evidencing reasonable diligence in ascertaining a reasonably believed last known/current address for the non-signing inventor, all as required by law.

CONCLUSION

Therefore, the instant petition hereby is **dismissed**.

---

[3] See: MPEP 409.03(b).

Further correspondence with respect to this matter should be addressed as follows:[4]

By mail: Commissioner for Patents[5]
P.O. Box 1450
Alexandria, VA 22313-1450

By FAX: IFW Formal Filings
(571) 273-8300
ATTN.: Office of Petitions

By hand: Mail Stop: Petition
Customer Service Window
Randolph Building
401 Dulany Street
Alexandria, VA 22314

While telephone inquiries regarding this decision may be directed to the undersigned at (571) 272-3214, it is noted that all practice before the Office is in writing (see: 37 C.F.R. §1.2[10]) and the proper authority for action on any matter in this regard are the statutes (35 U.S.C.), regulations (37 C.F.R.) and the commentary on policy (MPEP). Therefore, no telephone discussion may be controlling or considered authority for Petitioner's action(s).

John J. Gillon, Jr.
Senior Attorney
Office of Petitions

---

[4] On July 15, 2005, the Central Facsimile (FAX) Number changed from (703) 872-9306 to (571) 273-8300. Old number(s) no longer are in service and (571) 273-8300 is the only facsimile number recognized for centralized delivery. (For further information. see: http://www.uspto.gov/web/offices/pac/dapp/opla/preognotice/cfax062005.pdf.)

[5] To determine the appropriate addresses for other subject-specific correspondence, refer to the USPTO Web site at www.uspto.gov.

[10] The regulations at 37 C.F.R. §1.2 provide:

§1.2 Business to be transacted in writing.

All business with the Patent and Trademark Office should be transacted in writing.The personal attendance of applicants or their attorneys or agents at the Patent and Trademark Office is unnecessary. The action of the Patent and Trademark Office will be based exclusively on the written record in the Office. No attention will be paid to any alleged oral promise, stipulation,or understanding in relation to which there is disagreement or doubt.

UNITED STATES PATENT AND TRADEMARK OFFICE

Commissioner for Patents
United States Patent and Trademark Office
P.O. Box 1450
Alexandria, VA 22313-1450
www.uspto.gov

EITAN LAW GROUP
C/O LANDON IP INC.SUITE
4501700 DIAGONAL ROAD
ALEXANDRIA VA 22314

COPY MAILED

MAR 3 1 2008

In re Application of	:	
Grinberg, et al.	:	
Application No. 11/583,146	:	ON PETITION
Filed: 19 October, 2006	:	
Attorney Docket No. P-9590-US	:	

This is a decision on the petition filed on 19 December, 2007, under 37 C.F.R. §1.47(a).

For the reasons set forth below, the petition under 37 C.F.R. §1.47(a) is **GRANTED**.

BACKGROUND

The record indicates:

- the instant application was filed on 19 October, 2006, without, *inter alia*, a fully executed oath/declaration;
- on 7 November, 2006, the Office mailed a Notice of Missing Parts indicating, *inter alia*, that a fully executed oath/declaration (signed and dated) was required;
- on 2 May, 2007, Petitioner Allan C. Entis (Reg. No. 52,866) filed, *inter alia*, the original petition, an oath/declaration signed by Messrs. Harpaz, Govrin, Hasidi and Machtei (for themselves and on behalf of) but not the non-signing co-inventor Tsafrir Grinberg (Mr.

Grinberg), and what is styled as a statement but in fact is a letter from an officer of the averred assignee indicating an attempt to obtain Mr. Grinberg's signature on the oath/declaration, but absolutely no evidence of a diligent effort to ascertain a current/reasonably believed to be valid or last know mailing address and to transmit to the non-signing inventor (with a copy of a transmittal letter (and certified translation thereof if necessary) evidencing that) the entire application (description, claims, abstract and drawings)—the petition was dismissed on 1 October, 2007;

- the instant petition seeks to overcome the prior deficiencies and demonstrates that the entire application (description, claims, abstract and drawings) were presented to the non-signing inventor, with a copy of the transmittal in evidence thereof, and further that the non-signing inventor has not responded/signed/joined in the oath/declaration, and, so, constructively refused to do so—all in satisfaction of the requirements set forth in the guidance in the Commentary at commentary at MPEP §409.03(d).

Out of an abundance of caution, Petitioners always are reminded that those registered to practice *and* all others who make representations before the Office are reminded to inquire into the underlying facts of representations made to the Office and support averments with the appropriate documentation—since all owe to the Office the continuing duty to disclose.[1]

The availability of applications and application papers online to applicants/practitioners who diligently associate their Customer Number with the respective application(s) now provides an applicant/practitioner on-demand information as to events/transactions in an application.

This application and papers have been reviewed and found in compliance with 37 C.F.R. §1.47(a).

This application hereby is **ACCORDED status under 37 C.F.R. §1.47(a)**.

As provided under 37 C.F.R. §1.47(a), the Office will forward notice of this application's filing to the non-signing inventor at the address given in the petition.

Notice of the filing of this application also will be published in the Official Gazette.

This file is released to Office of Patent Application Processing (OPAP) (formerly Office of Initial Patent Examination (OIPE)) for processing as necessary before being released for examination in due course.

---

1 See supplement of 17 June, 1999. The Patent and Trademark Office is relying on petitioner=s duty of candor and good faith and accepting a statement made by Petitioner. See Changes to Patent Practice and Procedure, 62 Fed. Reg. at 53160 and 53178, 1203 Off. Gaz. Pat. Office at 88 and 103 (responses to comments 64 and 109)(applicant obligated under 37 C.F.R. '10.18 to inquire into the underlying facts and circumstances when providing statements to the Patent and Trademark Office).

While telephone inquiries regarding this decision may be directed to the undersigned at (571) 272-3214, it is noted that all practice before the Office is in writing (see: 37 C.F.R. §1.2[2]) and the proper authority for action on any matter in this regard are the statutes (35 U.S.C.), regulations (37 C.F.R.) and the commentary on policy (MPEP). Therefore, no telephone discussion may be controlling or considered authority for Petitioner's action(s).

John J. Gillon, Jr.
Senior Attorney
Office of Petitions

---

2 The regulations at 37 C.F.R. §1.2 provide:

§1.2 Business to be transacted in writing.

All business with the Patent and Trademark Office should be transacted in writing. The personal attendance of applicants or their attorneys or agents at the Patent and Trademark Office is unnecessary. The action of the Patent and Trademark Office will be based exclusively on the written record in the Office. No attention will be paid to any alleged oral promise, stipulation, or understanding in relation to which there is disagreement or doubt.

UNITED STATES PATENT AND TRADEMARK OFFICE

Commissioner for Patents
United States Patent and Trademark Office
P.O. Box 1450
Alexandria, VA 22313-1450
www.uspto.gov

TSAFRIR GRINBERG
13 HABANIM STREET
RAMAT HASHARON, 47216
ISRAEL

COPY MAILED

MAR 3 1 2008

In re Application of :
Grinberg, et al. :
Application No. 11/583,146 : COMMUNICATION
Filed: 19 October, 2006 :
Attorney Docket No. P-9590-US :

Dear Tsafrir Grinberg:

You are named as inventor in the above identified United States patent application, filed under the provisions of 35 U.S.C. §116 (United States Code), and 37 C.F.R. §1.47,[1] Rules of Practice in Patent Cases. Should a patent be granted on the application you will be designated therein as inventor.

As a named inventor you are entitled to inspect any paper in the file wrapper of the application, order copies of all or any part thereof (at a prepaid cost per 37 C.F.R. §1.19) or make your

---

1 The regulations at 37 C.F.R. §1.47 provide:

§ 1.47 Filing when an inventor refuses to sign or cannot be reached.

(a) If a joint inventor refuses to join in an application for patent or cannot be found or reached after diligent effort, the application may be made by the other inventor on behalf of himself or herself and the nonsigning inventor. The oath or declaration in such an application must be accompanied by a petition including proof of the pertinent facts, the fee set forth in §1.17(h), and the last known address of the nonsigning inventor. The nonsigning inventor may subsequently join in the application by filing an oath or declaration complying with §1.63.

(b) Whenever all of the inventors refuse to execute an application for patent, or cannot be found or reached after diligent effort, a person to whom an inventor has assigned or agreed in writing to assign the invention, or who otherwise shows sufficient proprietary interest in the matter justifying such action, may make application for patent on behalf of and as agent for all the inventors. The oath or declaration in such an application must be accompanied by a petition including proof of the pertinent facts, a showing that such action is necessary to preserve the rights of the parties or to prevent irreparable damage, the fee set forth in §1.17(h), and the last known address of all of the inventors. An inventor may subsequently join in the application by filing an oath or declaration complying with §1.63.

© The Office will send notice of the filing of the application to all inventors who have not joined in the application at the address(es) provided in the petition under this section, and publish notice of the filing of the application in the *Official Gazette*. The Office may dispense with this notice provision in a continuation or divisional application, if notice regarding the filing of the prior application was given to the nonsigning inventor(s).

[47 Fed. Reg. 41275, Sept. 17, 1982, effective Oct. 1, 1982; 48 Fed. Reg. 2709, Jan. 20, 1983, effective Feb. 27, 1983; revised, 62 Fed. Reg. 53131, Oct. 10, 1997, effective Dec. 1, 1997; revised, 65 Fed. Reg. 54604, Sept. 8, 2000, effective Nov. 7, 2000]

position of record in the application. Alternatively, you may arrange to do any of the preceding through a registered patent attorney or agent presenting written authorization from you. If you care to join the application, counsel of record (see below) would presumably assist you. Joining in the application would entail the filing of an appropriate oath or declaration by you pursuant to 37 C.F.R. §1.63.

Requests for information regarding your application should be directed to the File Information Unit at (703) 308-2733.

Information regarding how to pay for and order a copy of the application, or a specific paper in the application, should be directed to Certification Division at (703) 308-9726 or toll-free: (800) 972-6382 (outside the Washington D.C. area).

While telephone inquiries regarding this decision may be directed to the undersigned at (571) 272-3214, it is noted that all practice before the Office is in writing (see: 37 C.F.R. §1.2[2]) and the proper authority for action on any matter in this regard are the statutes (35 U.S.C.), regulations (37 C.F.R.) and the commentary on policy (MPEP). Therefore, no telephone discussion may be controlling or considered authority for Petitioner's action(s).

John J. Gillon, Jr.
Senior Attorney
Office of Petitions

Counsel of Record:
EITAN LAW GROUP
C/O LANDON IP INC.SUITE
4501700 DIAGONAL ROAD
ALEXANDRIA VA 22314

---

2 The regulations at 37 C.F.R. §1.2 provide:
§1.2 Business to be transacted in writing.
All business with the Patent and Trademark Office should be transacted in writing.The personal attendance of applicants or their attorneys or agents at the Patent and Trademark Office is unnecessary. The action of the Patent and Trademark Office will be based exclusively on the written record in the Office. No attention will be paid to any alleged oral promise, stipulation,or understanding in relation to which there is disagreement or doubt.

UNITED STATES PATENT AND TRADEMARK OFFICE

UNITED STATES DEPARTMENT OF COMMERCE
United States Patent and Trademark Office
Address: COMMISSIONER FOR PATENTS
P.O. Box 1450
Alexandria, Virginia 22313-1450
www.uspto.gov

YOUNG & THOMPSON
209 Madison Street
Suite 500
Alexandria, VA 22314

Mail Date: 07/08/2010

Applicant	: Robert Blanchard	: DECISION ON REQUEST FOR
Patent Number	: 7641580	: RECALCULATION of PATENT
Issue Date	: 01/05/2010	: TERM ADJUSTMENT IN VIEW
Application No	: 11/583,153	: OF WYETH AND NOTICE OF INTENT TO
Filed	: 10/19/2006	: ISSUE CERTIFICATE OF CORRECTION
		:

The Request for Recalculation is **GRANTED** to the extent indicated.

The patent term adjustment has been determined to be **468** days. The USPTO will *sua sponte* issue a certificate of correction reflecting the amount of PTA days determined by the recalculation.

Prior to the issuance of the certificate of correction, the USPTO will afford patentee an opportunity to be heard and request reconsideration. Accordingly, patentee has **one month or thirty (30) days**, whichever is longer, to file a request for reconsideration of this patent term adjustment calculation. See 35 U.S.C. 154(b)(3)(B)(ii) and 37 CFR 1.322(a)(4). No extensions of time will be granted under 37 CFR 1.136.

Patentee should use document code PET.OP if electronically filing a request for reconsideration of this patent term adjustment calculation. The patentee must also include the information required by 37 CFR 1.705(b)(2) and the fee required by 37 CFR 1.18(e). If patentee does not file a timely request for reconsideration of this patent term adjustment calculation including the information required by 37 CFR 1.705(b)(2) and the fee required by 37 CFR 1.18(e), the USPTO will issue a certificate of correction reflecting the PTA determination noted above.

Patentee should be aware that in order to preserve the right to review in the United States District Court for the District of Columbia of the USPTO patent term adjustment determination, patentee must ensure that he or she also take the steps required under 35 U.S.C. 154(b)(4)(A) in a timely manner. Nothing in the request for recalculation should be construed as providing an alternative time frame for commencing a civil action under 35 U.S.C. 154(b)(4)(A).

Any questions concerning this decision should be directed to the Office of Patent Legal Administration at 571-272-7702.

UNITED STATES PATENT AND TRADEMARK OFFICE

UNITED STATES DEPARTMENT OF COMMERCE
United States Patent and Trademark Office
Address: COMMISSIONER FOR PATENTS
P.O. Box 1450
Alexandria, Virginia 22313-1450
www.uspto.gov

BRINKS HOFER GILSON & LIONE
P.O. BOX 10395
CHICAGO, IL 60610

Mail Date: 04/21/2010

Applicant	: William E. McKinzie III	: DECISION ON REQUEST FOR
Patent Number	: 7626216	: RECALCULATION of PATENT
Issue Date	: 12/01/2009	: TERM ADJUSTMENT IN VIEW
Appliction No	: 11/583,212	: OF WYETH AND NOTICE OF INTENT TO
Filed	: 10/18/2006	: ISSUE CERTIFICATE OF CORRECTION
		:

The Request for Recalculation is **GRANTED** to the extent indicated.

The patent term adjustment has been determined to be **326** days. The USPTO will *sua sponte* issue a certificate of correction reflecting the amount of PTA days determined by the recalculation.

Prior to the issuance of the certificate of correction, the USPTO will afford patentee an opportunity to be heard and request reconsideration. Accordingly, patentee has **one month or thirty (30) days**, whichever is longer, to file a request for reconsideration of this patent term adjustment calculation. See 35 U.S.C. 154(b)(3)(B)(ii) and 37 CFR 1.322(a)(4). No extensions of time will be granted under 37 CFR 1.136.

Patentee should use document code PET.OP if electronically filing a request for reconsideration of this patent term adjustment calculation. The patentee must also include the information required by 37 CFR 1.705(b)(2) and the fee required by 37 CFR 1.18(e). If patentee does not file a timely request for reconsideration of this patent term adjustment calculation including the information required by 37 CFR 1.705(b)(2) and the fee required by 37 CFR 1.18(e), the USPTO will issue a certificate of correction reflecting the PTA determination noted above.

Patentee should be aware that in order to preserve the right to review in the United States District Court for the District of Columbia of the USPTO patent term adjustment determination, patentee must ensure that he or she also take the steps required under 35 U.S.C. 154(b)(4)(A) in a timely manner. Nothing in the request for recalculation should be construed as providing an alternative time frame for commencing a civil action under 35 U.S.C. 154(b)(4)(A).

Any questions concerning this decision should be directed to the Office of Patent Legal Administration at 571-272-7702.

UNITED STATES PATENT AND TRADEMARK OFFICE

Commissioner for Patents
United States Patent and Trademark Office
P.O. Box 1450
Alexandria, VA 22313-1450
www.uspto.gov

R. Bennett Ford
2355 Drusilla Lane
Baton Rouge LA 70809

COPY MAILED

JAN 16 2008

OFFICE OF PETITIONS

In re Application of :
Jack P. F. Gremillion, III :
Application No. 11/583,257 :
Filed: October 19, 2006 :
Attorney Docket No. 8064.009

ON PETITION

This is a decision on the petition under 37 CFR 1.137(b), filed August 3, 2007, to revive the above-identified application.

The petition is **GRANTED**.

The above-identified application became abandoned for failure to reply to the non-final Office action mailed January 12, 2007, which set a shortened statutory period for reply of three (3) months from its mailing date. A proper response was received within the allowable period, and the application became abandoned on April 13, 2007. A Notice of Abandonment was mailed on July 20, 2007.

The response to the Office action filed August 3, 2007, is noted.

The application is being forwarded to Technology Center 3700, GAU 3753 for further processing.

Telephone inquiries concerning this decision should be directed to the undersigned at (571) 272-3222.

Kenya A. McLaughlin
Petitions Attorney
Office of Petitions

UNITED STATES PATENT AND TRADEMARK OFFICE

UNITED STATES DEPARTMENT OF COMMERCE
United States Patent and Trademark Office
Address: COMMISSIONER FOR PATENTS
P.O. Box 1450
Alexandria, Virginia 22313-1450
www.uspto.gov

Carmen Patti Law Group, LLC
One N. LaSalle Street
44th Floor
Chicago, IL 60602

Mail Date: 07/06/2010

Applicant	: Thomas P. Chu	: DECISION ON REQUEST FOR
Patent Number	: 7643446	: RECALCULATION of PATENT
Issue Date	: 01/05/2010	: TERM ADJUSTMENT IN VIEW
Application No	: 11/583,273	: OF WYETH AND NOTICE OF INTENT TO
Filed	: 10/18/2006	: ISSUE CERTIFICATE OF CORRECTION
		:

The Request for Recalculation is **GRANTED** to the extent indicated.

The patent term adjustment has been determined to be **501** days. The USPTO will *sua sponte* issue a certificate of correction reflecting the amount of PTA days determined by the recalculation.

Prior to the issuance of the certificate of correction, the USPTO will afford patentee an opportunity to be heard and request reconsideration. Accordingly, patentee has **one month or thirty (30) days**, whichever is longer, to file a request for reconsideration of this patent term adjustment calculation. See 35 U.S.C. 154(b)(3)(B)(ii) and 37 CFR 1.322(a)(4). No extensions of time will be granted under 37 CFR 1.136.

Patentee should use document code PET.OP if electronically filing a request for reconsideration of this patent term adjustment calculation. The patentee must also include the information required by 37 CFR 1.705(b)(2) and the fee required by 37 CFR 1.18(e). If patentee does not file a timely request for reconsideration of this patent term adjustment calculation including the information required by 37 CFR 1.705(b)(2) and the fee required by 37 CFR 1.18(e), the USPTO will issue a certificate of correction reflecting the PTA determination noted above.

Patentee should be aware that in order to preserve the right to review in the United States District Court for the District of Columbia of the USPTO patent term adjustment determination, patentee must ensure that he or she also take the steps required under 35 U.S.C. 154(b)(4)(A) in a timely manner. Nothing in the request for recalculation should be construed as providing an alternative time frame for commencing a civil action under 35 U.S.C. 154(b)(4)(A).

Any questions concerning this decision should be directed to the Office of Patent Legal Administration at 571-272-7702.

UNITED STATES PATENT AND TRADEMARK OFFICE

Commissioner for Patents
United States Patent and Trademark Office
P.O. Box 1450
Alexandria, VA 22313-1450
www.uspto.gov

TEXAS INSTRUMENTS INCORPORATED
P O BOX 655474, M/S 3999
DALLAS TX 75265

MAILED

APR 0 8 2009

OFFICE OF PETITIONS

In re Application of	:	
Kevin Peter Lyne	:	
Application No. 11/583,296	:	DECISION ON PETITION
Filed: October 19, 2006	:	
Attorney Docket No. TI-60357	:	

This is a decision on the petition under the unintentional provisions of 37 CFR 1.137(b), filed February 17, 2009, to revive the above-identified application.

The application became abandoned for failure to reply in a timely manner to the non-final Office action mailed, July 28, 2008, which set a shortened statutory period for reply of three (3) months. No extensions of time under the provisions of 37 CFR 1.136(a) were obtained. Accordingly, by rules of operation the application became abandoned on October 29, 2008.

The petition satisfies the requirements of 37 CFR 1.137(b) in that petitioner has supplied (1) the reply in the form of an amendment, (2) the petition fee of $1620; and (3) an adequate statement of unintentional delay.

37 CFR 1.137(b)(3) requires a statement that "the entire delay in filing the required reply from the due date for the reply until the filing of a grantable petition pursuant to 37 CFR 1.137(b) was unintentional." Since the statement appearing in the petition varies from the language required by 37 CFR 1.137(b)(3), the statement is being construed as the required statement. Petitioner must notify the Office if this is **not** a correct reading of the statement appearing in the petition.

In view of the above, the petition is **GRANTED**.

Telephone inquiries concerning this decision should be directed to undersigned at (571) 272-1642. All other inquiries concerning the examination or status of this application should be directed to the Technology Center.

This application is being referred to Technology Center AU 2811 for appropriate action by the Examiner in the normal course of business on the reply received February 17, 2009.

April M. Wise
Petitions Examiner
Office of Petitions

UNITED STATES PATENT AND TRADEMARK OFFICE

UNITED STATES DEPARTMENT OF COMMERCE
United States Patent and Trademark Office
Address: COMMISSIONER FOR PATENTS
P.O. Box 1450
Alexandria, Virginia 22313-1450
www.uspto.gov

INTELLECTUAL PROPERTY GROUP
SEAGATE TECHNOLOGY FILES
FREDRIKSON & BYRON, PA
200 SOUTH SIXTH ST, SUITE 4000
MINNEAPOLIS, MN 55402-1425

Mail Date: 04/21/2010

Applicant	: Bruce A. Liikanen	: DECISION ON REQUEST FOR
Patent Number	: 7620772	: RECALCULATION of PATENT
Issue Date	: 11/17/2009	: TERM ADJUSTMENT IN VIEW
Appliction No	: 11/583,331	: OF WYETH AND NOTICE OF INTENT TO
Filed	: 10/19/2006	: ISSUE CERTIFICATE OF CORRECTION
		:

The Request for Recalculation is **GRANTED** to the extent indicated.

The patent term adjustment has been determined to be **381** days. The USPTO will *sua sponte* issue a certificate of correction reflecting the amount of PTA days determined by the recalculation.

Prior to the issuance of the certificate of correction, the USPTO will afford patentee an opportunity to be heard and request reconsideration. Accordingly, patentee has **one month or thirty (30) days**, whichever is longer, to file a request for reconsideration of this patent term adjustment calculation. See 35 U.S.C. 154(b)(3)(B)(ii) and 37 CFR 1.322(a)(4). No extensions of time will be granted under 37 CFR 1.136.

Patentee should use document code PET.OP if electronically filing a request for reconsideration of this patent term adjustment calculation. The patentee must also include the information required by 37 CFR 1.705(b)(2) and the fee required by 37 CFR 1.18(e). If patentee does not file a timely request for reconsideration of this patent term adjustment calculation including the information required by 37 CFR 1.705(b)(2) and the fee required by 37 CFR 1.18(e), the USPTO will issue a certificate of correction reflecting the PTA determination noted above.

Patentee should be aware that in order to preserve the right to review in the United States District Court for the District of Columbia of the USPTO patent term adjustment determination, patentee must ensure that he or she also take the steps required under 35 U.S.C. 154(b)(4)(A) in a timely manner. Nothing in the request for recalculation should be construed as providing an alternative time frame for commencing a civil action under 35 U.S.C. 154(b)(4)(A).

Any questions concerning this decision should be directed to the Office of Patent Legal Administration at 571-272-7702.

UNITED STATES PATENT AND TRADEMARK OFFICE

UNITED STATES DEPARTMENT OF COMMERCE
United States Patent and Trademark Office
Address: COMMISSIONER FOR PATENTS
P.O. Box 1450
Alexandria, Virginia 22313-1450
www.uspto.gov

Seagate Technology LLC
Mallstop SHK1LG
1280 Disc Drive
MINNEAPOLIS, MN 55379

Mail Date: 05/18/2010

Applicant : Bruce A. Liikanen
Patent Number : 7620772
Issue Date : 11/17/2009
Application No : 11/583,331
Filed : 10/19/2006

: NOTICE CONCERNING IMPROPER
: CALCULATION OF PATENT TERM
: ADJUSTMENT BASED UPON USPTO
: IMPROPERLY MEASURING REDUCTION
: PERIOD UNDER 37 CFR 1.704(c)(10).

The United States Patent and Trademark Office (USPTO) discovered that in processing the recent recalculation decisions mailed in response to patentee's filed Request for Recalculation of Patent Term Adjustment in view of Wyeth, the USPTO improperly measured the reduction period for reductions under 37 CFR 1.704(c)(10). Pursuant to 37 CFR 1.704(c)(10), patentee's reduction begins on the date of filing the amendment under 37 CFR 1.312 ("1.312 amendment") or other related paper and ends on the date that the Office mails a response to the filing of the 1.312 amendment or other paper. It has been discovered that during the recalculation, the calculation failed to the limit the reduction to the mail date of the response to the 1.312 amendment or other paper. Accordingly, patentee's reductions were greater than warranted.

This notice **VACATES** the previous GRANTED request for recalculation and provides patentee with a revised GRANTED recalculation.

The patent term adjustment has been determined to be **389** days. The USPTO will *sua sponte* issue a certificate of correction reflecting the amount of patent term adjustment (PTA) days determined by the recalculation.

Prior to the issuance of the certificate of correction, the USPTO will afford patentee an opportunity to be heard and request reconsideration. Accordingly, patentee has **one month or thirty (30) days** from the mail date of this notice, whichever is longer, to file a request for reconsideration of this PTA calculation. See 35 U.S.C. § 154(b)(3)(B)(ii) and 37 CFR 1.322(a)(4).

Patentee should use document code PET.OP if electronically filing a request for reconsideration of this PTA calculation. The patentee must also include the information required by 37 CFR 1.705(b)(2), and the fee required by 37 CFR 1.18(e). If patentee does not file a timely request for reconsideration of this PTA calculation, including the information required by 37 CFR 1.705(b)(2) and the fee required by 37 CFR 1.18(e), the USPTO will issue a certificate of correction reflecting the PTA determination noted above.

Patentee should be aware that in order to preserve the right of review of the USPTO's PTA determination in the United States District Court for the District of Columbia, patentee must ensure that the steps required under 35 U.S.C. § 154 (b)(4) are taken in a timely manner. Nothing in the request for recalculation should be construed as providing an alternative time frame for commencing a civil action under 35 U.S.C. § 154(b)(4).

UNITED STATES PATENT AND TRADEMARK OFFICE

Commissioner for Patents
United States Patent and Trademark Office
P.O. Box 1450
Alexandria, VA 22313-1450
www.uspto.gov

ETHAN D. CIVAN
170 SOMERSET DRIVE
BLUE BELL PA 19422

MAILED

JUN 02 2010

OFFICE OF PETITIONS

In re Application of	:	
Hodge et al.	:	DECISION ON PETITION
Application No. 11/583,337	:	TO WITHDRAW
Filed: October 19, 2006	:	FROM RECORD
Attorney Docket No. 2006-0518-US	:	

This is a decision on the Request to Withdraw as attorney or agent of record under 37 C.F.R. § 1.36(b), filed June 1, 2010.

The request is **APPROVED**.

A grantable request to withdraw as attorney/agent of record must be signed by every attorney/agent seeking to withdraw or contain a clear indication that one attorney is signing on behalf of another/others. The Office will require the practitioner(s) to certify that he, she or they have: (1) given reasonable notice to the client, prior to the expiration of the reply period, which the practitioner(s) intends to withdraw from employment; (2) delivered to the client or a duly authorized representative of the client all papers and property (including funds) to which the client is entitled; and (3) notified the client of any replies that may be due and the time frame within which the client must respond, pursuant to 37 CFR 10.40 (c).

The request was signed by Ethan D. Civan on behalf of all attorneys of record who are associated with Customer No. 55863.

All attorneys/agents associated with Customer Number 55863 have been withdrawn. Applicants are reminded that there is no attorney of record at this time.

All future correspondence will be directed to the applicant at the address indicated below.

Currently, there is an outstanding Office action mailed June 24, 2010 that requires a reply.

Telephone inquires concerning this decision should be directed to the undersigned at (571) 272-7751. All other inquires concerning either the examination or status of the application should be directed to the Technology Center.

Joan Olszewski

Joan Olszewski
Petitions Examiner
Office of Petitions

cc: Joy Hodge
332 Mulberry Street
Darby, PA 19023

UNITED STATES PATENT AND TRADEMARK OFFICE

Commissioner for Patents
United States Patent and Trademark Office
P.O. Box 1450
Alexandria, VA 22313-1450
www.uspto.gov

THORPE NORTH & WESTERN, LLP
P.O. BOX 1219
SANDY, UT 84091-1219

COPY MAILED

DEC 2 2 2008

OFFICE OF PETITIONS

In re Application of :
Chien-Min Sung :
Application No. 11/583,353 :
Filed: October 18, 2006 :
Attorney Docket No. 00802-25769 :

ON PETITION

This is a decision on the petition under the unintentional provisions of 37 CFR 1.137(b), filed November 5, 2008, to revive the above-identified application.

The petition is **GRANTED.**

The application became abandoned for failure to timely file a reply within the meaning of 37 CFR 1.113 to the final Office action of October 4, 2007. The proposed reply required for consideration of a petition to revive must be a Notice of Appeal (and appeal fee required by 37 CFR 41.20(b)(2), an amendment that prima facie places the application in condition for allowance, a Request for Continued Examination and submission (37 CFR 1.114), or the filing of a continuing application under 37 CFR 1.53(b). See MPEP 711.03(c)(III)(A)(2). No extension of time pursuant to the provisions of 37 CFR 1.136(a) was obtained. Accordingly, the date of abandonment of this application is January 5, 2008.

The petition satisfies the requirements of 37 CFR 1.137(b) in that petitioner has supplied (1) the reply in the form of a Request for Continued Examination (RCE) and fee of $810 and the submission required by 37 CFR 1.114; (2) the petition fee of $1620; and (3) a proper statement of unintentional delay.

Telephone inquiries concerning this decision should be directed to the undersigned at (571) 272-3210.

This application is being referred to Technology Center AU 3723 for processing of the RCE and for appropriate action by the Examiner in the normal course of business on the amendment submitted in accordance with 37 CFR 1.114.

Irvin Dingle
Petition Examiner
Office of Petitions

UNITED STATES PATENT AND TRADEMARK OFFICE

UNITED STATES DEPARTMENT OF COMMERCE
United States Patent and Trademark Office
Address: COMMISSIONER FOR PATENTS
P.O. Box 1450
Alexandria, Virginia 22313-1450
www.uspto.gov

WOLF GREENFIELD & SACKS, P.C.
600 ATLANTIC AVENUE
BOSTON, MA 02210-2206

Mail Date: 04/21/2010

Applicant	: Dennis Cherok	: DECISION ON REQUEST FOR
Patent Number	: 7614258	: RECALCULATION of PATENT
Issue Date	: 11/10/2009	: TERM ADJUSTMENT IN VIEW
Appliction No	: 11/583,364	: OF WYETH AND NOTICE OF INTENT TO
Filed	: 10/19/2006	: ISSUE CERTIFICATE OF CORRECTION
		:

The Request for Recalculation is **GRANTED** to the extent indicated.

The patent term adjustment has been determined to be **296** days. The USPTO will *sua sponte* issue a certificate of correction reflecting the amount of PTA days determined by the recalculation.

Prior to the issuance of the certificate of correction, the USPTO will afford patentee an opportunity to be heard and request reconsideration. Accordingly, patentee has **one month or thirty (30) days**, whichever is longer, to file a request for reconsideration of this patent term adjustment calculation. See 35 U.S.C. 154(b)(3)(B)(ii) and 37 CFR 1.322(a)(4). No extensions of time will be granted under 37 CFR 1.136.

Patentee should use document code PET.OP if electronically filing a request for reconsideration of this patent term adjustment calculation. The patentee must also include the information required by 37 CFR 1.705(b)(2) and the fee required by 37 CFR 1.18(e). If patentee does not file a timely request for reconsideration of this patent term adjustment calculation including the information required by 37 CFR 1.705(b)(2) and the fee required by 37 CFR 1.18(e), the USPTO will issue a certificate of correction reflecting the PTA determination noted above.

Patentee should be aware that in order to preserve the right to review in the United States District Court for the District of Columbia of the USPTO patent term adjustment determination, patentee must ensure that he or she also take the steps required under 35 U.S.C. 154(b)(4)(A) in a timely manner. Nothing in the request for recalculation should be construed as providing an alternative time frame for commencing a civil action under 35 U.S.C. 154(b)(4)(A).

Any questions concerning this decision should be directed to the Office of Patent Legal Administration at 571-272-7702.

UNITED STATES PATENT AND TRADEMARK OFFICE

UNITED STATES DEPARTMENT OF COMMERCE
United States Patent and Trademark Office
Address: COMMISSIONER FOR PATENTS
P.O. Box 1450
Alexandria, Virginia 22313-1450
www.uspto.gov

DORSEY & WHITNEY LLP
INTELLECTUAL PROPERTY DEPARTMENT
SUITE 1500
50 SOUTH SIXTH STREET
MINNEAPOLIS, MN 55402-1498

Mail Date: 04/21/2010

Applicant	: Uwe Pruessmeier	: DECISION ON REQUEST FOR
Patent Number	: 7607050	: RECALCULATION of PATENT
Issue Date	: 10/20/2009	: TERM ADJUSTMENT IN VIEW
Appliction No	: 11/583,375	: OF WYETH AND NOTICE OF INTENT TO
Filed	: 10/18/2006	: ISSUE CERTIFICATE OF CORRECTION
		:

The Request for Recalculation is **GRANTED** to the extent indicated.

The patent term adjustment has been determined to be **419** days. The USPTO will *sua sponte* issue a certificate of correction reflecting the amount of PTA days determined by the recalculation.

Prior to the issuance of the certificate of correction, the USPTO will afford patentee an opportunity to be heard and request reconsideration. Accordingly, patentee has **one month or thirty (30) days**, whichever is longer, to file a request for reconsideration of this patent term adjustment calculation. See 35 U.S.C. 154(b)(3)(B)(ii) and 37 CFR 1.322(a)(4). No extensions of time will be granted under 37 CFR 1.136.

Patentee should use document code PET.OP if electronically filing a request for reconsideration of this patent term adjustment calculation. The patentee must also include the information required by 37 CFR 1.705(b)(2) and the fee required by 37 CFR 1.18(e). If patentee does not file a timely request for reconsideration of this patent term adjustment calculation including the information required by 37 CFR 1.705(b)(2) and the fee required by 37 CFR 1.18(e), the USPTO will issue a certificate of correction reflecting the PTA determination noted above.

Patentee should be aware that in order to preserve the right to review in the United States District Court for the District of Columbia of the USPTO patent term adjustment determination, patentee must ensure that he or she also take the steps required under 35 U.S.C. 154(b)(4)(A) in a timely manner. Nothing in the request for recalculation should be construed as providing an alternative time frame for commencing a civil action under 35 U.S.C. 154(b)(4)(A).

Any questions concerning this decision should be directed to the Office of Patent Legal Administration at 571-272-7702.

UNITED STATES PATENT AND TRADEMARK OFFICE

Commissioner for Patents
United States Patent and Trademark Office
P.O. Box 1450
Alexandria, VA 22313-1450
www.uspto.gov

KATHY MANKE
AVAGO TECHNOLOGIES LIMITED
4380 ZIEGLER ROAD
FORT COLLINS, CO 80525

MAILED

JAN 14 2010

OFFICE OF PETITIONS

In re Application of
Gernot FATTINGER
Application No. 11/583,380
Filed: October 18, 2006
Attorney Docket No. **2006-50971 US**

DECISION GRANTING PETITION
UNDER 37 CFR 1.313(c)(2)

This is a decision on the petition under 37 CFR 1.313(c)(2), filed January 11, 2010, to withdraw the above-identified application from issue after payment of the issue fee.

The petition is **GRANTED**.

The above-identified application is withdrawn from issue for consideration of a submission under 37 CFR 1.114 (request for continued examination). *See* 37 CFR 1.313(c)(2).

Petitioner is advised that the issue fee paid on January 4, 2010 cannot be refunded. If, however, this application is again allowed, petitioner may request that it be applied towards the issue fee required by the new Notice of Allowance.[1]

The petition is not signed by an attorney of record. Nevertheless, in accordance with 37 CFR 1.134, the signature of Mr. William S. Francos appearing on the correspondence shall constitute a representation to the United States Patent and Trademark Office that he is authorized to represent the particular party on whose behalf he acts. If Mr. Francos desires to receive future correspondence regarding this file, the appropriate power of attorney documents must be submitted. A courtesy copy of this decision is being mailed to petitioner herein. However, until otherwise instructed, all future correspondence regarding this application will be directed solely to the above-noted correspondence of record.

Telephone inquiries should be directed to the undersigned at (571) 272-7253.

This application is being referred to Technology Center AU 3729 for processing of the request for continued examination under 37 CFR 1.114 and for consideration of the concurrently filed amendment and information disclosure statement.

/Monica A. Graves/
Petitions Examiner, Office of Petitions

cc: **WILLIAM S. FRANCOS**
VOLENTINE & WHITT, PLLC.
ONE FREEDOM SQUARE
11951 FREEDOM DRIVE, SUITE 1260
RESTON, VA 20190

---

[1] *The request to apply the issue fee to the new Notice may be satisfied by completing and returning the new Part B – Fee(s) Transmittal Form (along with any balance due at the time of submission). Petitioner is advised that the Issue Fee Transmittal Form* ***must*** *be completed and timely submitted to avoid abandonment of the application.*

UNITED STATES PATENT AND TRADEMARK OFFICE

UNITED STATES DEPARTMENT OF COMMERCE
United States Patent and Trademark Office
Address: COMMISSIONER FOR PATENTS
P.O. Box 1450
Alexandria, Virginia 22313-1450
www.uspto.gov

APPLICATION NO.	FILING DATE	FIRST NAMED INVENTOR	ATTORNEY DOCKET NO.	CONFIRMATION NO.
11/583,401	10/18/2006	Nam-Sung Jung	SDIYOU.044AUS	3817

7590 11/02/2009
KNOBBE MARTENS OLSON & BEAR LLP
2040 MAIN STREET
FOURTEENTH FLOOR
IRVINE, CA 92614

EXAMINER
PHAM, TAMMY T

ART UNIT	PAPER NUMBER
2629	

NOTIFICATION DATE	DELIVERY MODE
11/02/2009	ELECTRONIC

DECISION DISMISSING PETITION UNDER 37 CFR 1.138(d)

The declaration of express abandonment will not be recognized

This is in response to the petition under 37 CFR 1.138(d), requesting for a refund of any previously paid search fee and excess claims fee in the above-identified application.

The petition is dismissed.

The express abandonment will **not** be recognized for the reason(s) indicated below:

1. ☑ The petition was not filed in sufficient time to permit the appropriate officials to recognize the abandonment before an examination has been made of the application. See 37 CFR 1.138(d).

2. ☐ The petition was not signed by a party authorized by 37 CFR 1.33(b)(1), (3) or (4).

3. ☐ The application is not an application filed under 35 U.S.C. 111(a) on or after December 8, 2004.

4. ☐ The petition for express abandonment under 1.138(d) is dismissed because the applicant did not pay any search fee and excess claims fees in the above-identified application.

Telephone inquiries should be directed to the Office of Data Management at (571) 272-4200.

Patent Publication Branch
Office of Data Management

FORM PET651D (Rev. 08/07)

UNITED STATES PATENT AND TRADEMARK OFFICE

Commissioner for Patents
United States Patent and Trademark Office
P.O. Box 1450
Alexandria, VA 22313-1450
www.uspto.gov

BLAKELY SOKOLOFF TAYLOR & ZAFMAN LLP
1279 OAKMEAD PARKWAY
SUNNYVALE, CA 94085-4040

COPY MAILED

NOV 1 7 2008

OFFICE OF PETITIONS

In re Application of :
ARIGA, Koji :
Application No. 11/583,414 :
Filed: October 18, 2006 :
Attorney Docket No. **6639P261** :

DECISION GRANTING PETITION
UNDER 37 CFR 1.313(c)(2)

This is a decision on the petition under 37 CFR 1.313(c)(2), filed November 13, 2008, to withdraw the above-identified application from issue after payment of the issue fee.

The petition is **GRANTED**.

The above-identified application is withdrawn from issue for consideration of a submission under 37 CFR 1.114 (request for continued examination). *See* 37 CFR 1.313(c)(2).

Petitioner is advised that the issue fee paid on October 14, 2008 cannot be refunded. If, however, this application is again allowed, petitioner may request that it be applied towards the issue fee required by the new Notice of Allowance.[1]

Telephone inquiries should be directed to the undersigned at (571) 272-7253.

This application is being referred to Technology Center AU 2835 for processing of the request for continued examination under 37 CFR 1.114 and for consideration of the concurrently filed information disclosure statement.

Monica A. Graves
Petitions Examiner
Office of Petitions

---

[1] *The request to apply the issue fee to the new Notice may be satisfied by completing and returning the new Part B – Fee(s) Transmittal Form (along with any balance due at the time of submission). Petitioner is advised that the Issue Fee Transmittal Form* ***must*** *be completed and timely submitted to avoid abandonment of the application.*

UNITED STATES PATENT AND TRADEMARK OFFICE

Commissioner for Patents
United States Patent and Trademark Office
P.O. Box 1450
Alexandria, VA 22313-1450
www.uspto.gov

MAILED
FROM DIRECTORS OFFICE

MAR 2 2 2007

TECHNOLOGY CENTER 3600

ANTOINETTE M. TEASE
P.O. BOX 51016
BILLINGS, MT 59105

In re application of
Tony E. Lanes et al.
Application No. 11/583,417
Filed: October 18, 2006
For: SYSTEM AND METHOD FOR GRAPHICALLY DISPLAYING INFORMATION CONCERNING GEOGRAPHICALLY DISPERSED ASSETS

DECISION ON PETITION TO MAKE SPECIAL FOR NEW APPLICATION UNDER 37 CFR 1.102

This is a decision on the petition filed on October 18, 2006 to make the above-identified application special for accelerated examination procedure under 37 C.F.R. § 1.102(d).

The petition to make the application special is **DENIED**.

REGULATION AND PRACTICE

To be eligible for accelerated examination under 37 C.F.R. § 1.102(d) and pursuant to the "Change to Practice for Petitions in Patent Applications to Make Special and for Accelerated Examination" published in the Federal Register on June 26, 2006 (71 Fed. Reg. 36323), the following conditions must be satisfied:

1. The application must be a non-reissue utility or design application filed under 37 CFR 1.111(a);
2. The application, the petition and the required fees must be filed electronically using the USPTO's electronic filing system (EFS), or EFS-web; if not filed electronically, a statement asserting that EFS and EFS-web were not available during the normal business hours;
3. The application, at the time of filing, must be complete under 37 CFR 1.51 and in condition for examination;
4. The application must contain three or fewer independent claims and twenty or fewer total claims and the claims must be directed to a single invention.

The petition to make special under accelerated examination under 37 C.F.R. § 1.102(d) is not acceptable because a Notice to File Missing Parts was mailed on February 1, 2007. Further, more than twenty claims were filed with the application. It appears that the petition was filed under the guidelines for making an application special that were in effect prior to August 25, 2006. As of August 25, 2006 the new guidelines replaced the old guidelines. Since applicant's petition was received on October 18, 2006 the petition must be considered under the new guidelines and thus is properly **DENIED**.

For the above-stated reasons, the petition is denied. The application will therefore be taken up by the examiner for action in its regular turn.

Any inquiry regarding this decision should be directed to Kenneth J. Dorner, Quality Assurance Specialist, at (571) 272-6587.

Kenneth J. Dorner
Quality Assurance Specialist
Technology Center 3600

KJD/dew: 03/16/07

UNITED STATES PATENT AND TRADEMARK OFFICE

COMMISSIONER FOR PATENTS
UNITED STATES PATENT AND TRADEMARK OFFICE
P.O. BOX 1450
ALEXANDRIA, VA 22313-1450
www.uspto.gov

THE GOODYEAR TIRE & RUBBER COMPANY
INTELLECTUAL PROPERTY DEPARTMENT 823
1144 EAST MARKET STREET
AKRON, OH 44316-0001

COPY MAILED

JUN 25 2008

OFFICE OF PETITIONS

In re Application of :
Dane Kenton Parker :
Application No. 11/583,423 : ON PETITION
Filed: October 19, 2006 :
Attorney Docket No. DN2006120 :

This is a decision in response to the petition, filed January 4, 2008, to revive the above-identified application under the provisions of 37 CFR 1.137(b).

The petition is **GRANTED**.

The application became abandoned for failure to reply in a timely manner to the non-final Office action mailed April 23, 2007, which set a shortened statutory period for reply of three (3) months. No extension of time under the provisions of 37 CFR 1.136(a) was obtained. Accordingly, the application became abandoned on July 24, 2007. A Notice of Abandonment was mailed on December 12, 2007. In response, on January 4, 2008, the present petition was filed.

The petition satisfies the conditions for revival pursuant to the provisions of 37 CFR 1.137(b) in that petitioner has supplied (1) the reply in the form of an amendment; (2) the petition fee of $1,540; and (3) an adequate statement of unintentional delay.

The application is being referred to Technology Center AU 1796 for appropriate action by the Examiner in the normal course of business on the amendment received January 4, 2008.

Telephone inquiries concerning this decision should be directed to the undersigned at (571) 272-3204. Inquiries relating to further prosecution should be directed to the Technology Center.

Sherry D. Brinkley
Petitions Examiner
Office of Petitions

UNITED STATES PATENT AND TRADEMARK OFFICE

Commissioner for Patents
United States Patent and Trademark Office
P.O. Box 1450
Alexandria, VA 22313-1450
www.uspto.gov

COPY MAILED

OCT 29 2007

OFFICE OF PETITIONS

BURNS & LEVINSON, LLP
125 SUMMER STREET
BOSTON, MA 02110

In re Application of	:	
Jerome H. Simon	:	
Application No. 11/583,441	:	DECISION ON PETITION
Filed: October 19, 2006	:	UNDER 37 CFR 1.137(b)
Attorney Docket No. 04870-P39	:	

This is a decision on the petition, filed May 7, 2007, which is being treated as a petition under 37 CFR 1.137(b) to revive the instant nonprovisional application for failure to timely notify the U.S. Patent and Trademark (USPTO) of the filing of an application in a foreign country, or under a multinational treaty that requires publication of applications eighteen months after filing. *See* 37 CFR 1.137(f).

The petition is **GRANTED**.

Petitioner states that the instant nonprovisional application is the subject of an application filed in an eighteen-month publication country on December 27, 2006. However, the USPTO was unintentionally not notified of this filing within 45 days subsequent to the filing of the subject application in an eighteen-month publication country.

In view of the above, this application became abandoned pursuant to 35 U.S.C. § 122(b)(2)(B)(iii) and 37 CFR 1.213(c) for failure to timely notify the Office of the filing of an application in a foreign country or under a multilateral international agreement that requires publication of applications 18 months after filing.

A petition to revive an application abandoned pursuant to 35 U.S.C. 122(b)(2)(B)(iii) for failure to notify the USPTO of a foreign filing must be accompanied by:

(1) the required reply which is met by the notification of such filing in a foreign country or under a multinational treaty;
(2) the petition fee as set forth in 37 CFR 1.17(m); and
(3) a statement that the entire delay in filing the required reply from the due date of the reply until the filing of a grantable petition was unintentional.

The instant petition has been found to be in compliance with 37 CFR 1.137(b). Accordingly, the failure to timely notify the USPTO of a foreign or international filing within 45 days after the date of filing of

such foreign or international application as provided by 35 U.S.C. § 122(b)(2)(B)(iii) and 37 CFR 1.213(c) is accepted as having been unintentionally delayed.

The previous Request and Certification under 35 U.S.C. § 122(b)(2)(B)(i) has been rescinded. A Notice Regarding Rescission of Nonpublication Request which sets forth the projected publication date of January 31, 2008 accompanies this decision on petition.

Telephone inquiries concerning this decision should be directed to the undersigned at (571) 272-3208.

This application is being referred to Technology Center Art Unit 2885 for examination in due course.

Karen Creasy

Karen Creasy
Petitions Examiner
Office of Petitions

ATTACHMENT: Notice Regarding Rescission of Nonpublication Request

UNITED STATES PATENT AND TRADEMARK OFFICE

UNITED STATES DEPARTMENT OF COMMERCE
United States Patent and Trademark Office
Address: COMMISSIONER FOR PATENTS
P.O. Box 1450
Alexandria, Virginia 22313-1450
www.uspto.gov

APPLICATION NUMBER	FILING OR 371(C) DATE	FIRST NAMED APPLICANT	ATTY. DOCKET NO./TITLE
11/583,441	10/19/2006	Jerome H. Simon	04870-P39

CONFIRMATION NO. 4480

26486
BURNS & LEVINSON, LLP
125 SUMMER STREET
BOSTON, MA 02110

NONPUBLICATION RESCISSION LETTER

OC000000026455904

Date Mailed: 10/25/2007

Communication Regarding Rescission Of Nonpublication Request and/or Notice of Foreign Filing

Applicant's rescission of the previously-filed nonpublication request and/or notice of foreign filing is acknowledged. The paper has been reflected in the Patent and Trademark Office's (USPTO's) computer records so that the earliest possible projected publication date can be assigned.

The projected publication date is 01/31/2008.

If applicant rescinded the nonpublication request before or on the date of "foreign filing,"[1] then no notice of foreign filing is required.

If applicant foreign filed the application after filing the above application and before filing the rescission, and the rescission did not also include a notice of foreign filing, then a notice of foreign filing (not merely a rescission) is required to be filed within 45 days of the date of foreign filing. See 35 U.S.C. § 122(b)(2)(B)(iii), and Clarification of the United States Patent and Trademark Office's Interpretation of the Provisions of 35 U.S.C. § 122(b)(2)(B)(ii)-(iv), 1272 Off. Gaz. Pat. Office 22 (July 1, 2003).

If a notice of foreign filing is required and is not filed within 45 days of the date of foreign filing, then the application becomes abandoned pursuant to 35 U.S.C. § 122(b)(2)(B)(iii). In this situation, applicant should either file a petition to revive or notify the Office that the application is abandoned. See 37 CFR 1.137(f). Any such petition to revive will be forwarded to the Office of Petitions for a decision. Note that the filing of the petition will not operate to stay any period of reply that may be running against the application.

Questions regarding petitions to revive should be directed to the Office of Petitions at (571) 272-3282. Questions regarding publications of patent applications should be directed to the patent application publication hotline at (703) 605-4283 or by e-mail pgpub@uspto.gov.

[1] Note, for purpose of this notice, that "foreign filing" means "filing an application directed to the same invention in another country, or under a multilateral international agreement, that requires publication of applications 18 months after filing".

UNITED STATES PATENT AND TRADEMARK OFFICE

Commissioner for Patents
United States Patent and Trademark Office
P.O. Box 1450
Alexandria, VA 22313-1450
www.uspto.gov

OSRAM SYLVANIA Inc.
100 Endicott Street
Danvers MA 01923

COPY MAILED
DEC 16 2008

In re Application of	:	
Ceferino Garcia, et. al.	:	
Application No. 11/583,445	:	DECISION ON PETITION
Filed: October 19, 2006	:	
Attorney Docket No. 2006P20216US	:	

This is a decision on the petition under the unintentional provisions of 37 CFR 1.137(b), filed November 24, 2008, to revive the above-identified application.

The petition is **GRANTED**.

The application became abandoned for failure to reply in a timely manner to the Non-Final Office Action mailed, November 16, 2007, which set a shortened statutory period for reply of three (3) months. No extensions of time under the provisions of 37 CFR 1.136 (a) were obtained. Accordingly, the application became abandoned on February 17, 2007.

The petition satisfies the requirements of 37 CFR 1.137(b) in that petitioner has supplied (1) the reply in the form of an Amendment, (2) the petition fee of $1620, and (3) a proper statement of unintentional delay.

In addition to receiving a Petition for Revival of an Application for Patent Abandoned Unintentionally Under 37CFR 1.137(b), the United States Patent and Trademark Office received a payment of $1640 for a four month extension of time on June 2, 2008.

An extension of time under 37 CFR 1.136 must be filed prior to the expiration of the maximum extendable period for reply. *See* In re Application of S., 8 USPQ2d 1630, 1631 (Comm'r Pats. 1988). Since the $1640 extension of time fee was subsequent to the maximum extendable period for reply, this fee is unnecessary and will be refunded to the petitioner's deposit account.

Telephone inquiries concerning this decision should be directed to Denise Williams at (571) 272-8930.

This application is being referred to Technology Center AU 2838 for appropriate action by the Examiner in the normal course of business on the reply received.

Brian W. Brown
Petitions Examiner
Office of Petitions

UNITED STATES PATENT AND TRADEMARK OFFICE

Commissioner for Patents
United States Patent and Trademark Office
P.O. Box 1450
Alexandria, VA 22313-1450
www.uspto.gov

FRISHAUF, HOLTZ, GOODMAN & CHICK, P.C.
220 FIFTH AVENUE
16TH FLOOR
NEW YORK, NY 10001-7708

COPY MAILED

SEP 06 2007

OFFICE OF PETITIONS

In re Application of
Masaru Kuribayashi et al
Application No. 11/583,448
Filed: October 19, 2006
Attorney Docket No. 06766/LH

DECISION GRANTING PETITION
UNDER 37 CFR 1.313(c)(2)

This is a decision on the petition, filed September 5, 2007, under 37 CFR 1.313(c)(2) to withdraw the above-identified application from issue after payment of the issue fee.

The petition is **GRANTED**.

The above-identified application is withdrawn from issue for consideration of a submission under 37 CFR 1.114 (request for continued examination). See 37 CFR 1.313(c)(2).

Petitioner is advised that the issue fee paid on August 16, 2007 in the above-identified application cannot be refunded. If, however, the above-identified application is again allowed, petitioner may request that it be applied towards the issue fee required by the new Notice of Allowance.[1]

Telephone inquiries should be directed to the undersigned at (571) 272-3218.

This matter is being referred to Technology Center AU 2882 for processing of the request for continued examination under 37 CFR 1.114 and for consideration of the Information Disclosure Statement.

Frances Hicks
Petitions Examiner
Office of Petitions

C:\Documents and Settings\fhicks\My Documents\470\Sept10\583448.wpd

---

[1] *The request to apply the issue fee to the new Notice may be satisfied by completing and returning the new Part B – Fee(s) Transmittal Form (along with any balance due at the time of submission). Petitioner is advised that the Issue Fee Transmittal Form **must** be completed and timely submitted to avoid abandonment.*

UNITED STATES PATENT AND TRADEMARK OFFICE

UNITED STATES DEPARTMENT OF COMMERCE
United States Patent and Trademark Office
Address: COMMISSIONER FOR PATENTS
P.O. Box 1450
Alexandria, Virginia 22313-1450
www.uspto.gov

APPLICATION NO.	FILING DATE	FIRST NAMED INVENTOR	ATTORNEY DOCKET NO.	CONFIRMATION NO.
11/583,449	10/19/2006	William D. Denison	MET-061210	5728

7590 02/18/2009

FACTOR & LAKE, LTD
1327 W. WASHINGTON BLVD.
SUITE 5G/H
CHICAGO, IL 60607

EXAMINER
ZIMMERMAN, BRIAN A

ART UNIT	PAPER NUMBER
2612	

MAIL DATE	DELIVERY MODE
02/18/2009	PAPER

DECISION GRANTING PETITION UNDER 37 CFR 1.138(d)

The declaration of express abandonment is recognized

This is in response to the petition under 37 CFR 1.138(d), requesting for a refund of any previously paid search fee and excess claims fee in the above-identified application.

The petition is granted.

The express abandonment is recognized. Any previously paid search fee and excess claims fee are hereby refunded.

Telephone inquiries should be directed to the Office of Data Management at (571) 272-4200.

Betty Powell

Patent Publication Branch
Office of Data Management

Adjustment date: 02/19/2009 BPOWELL
10/23/2006 HLE333 00000007 11583449
02 FC:2111 -250.00 OP
04 FC:2201 -900.00 OP
05 FC:2202 -1025.00 OP

Repln. Ref: 02/19/2009 BPOWELL 0015411200
DAH:509545 Name/Number:11583670
FC: 9204 $800.00 CR

FORM PET651G (Rev. 08/07)

Repln. Ref: 02/19/2009 BPOWELL 0015430700
DA#:500545 Name/Number:11583449
FC: 9204 $2175.00 CR

UNITED STATES PATENT AND TRADEMARK OFFICE

Commissioner for Patents
United States Patent and Trademark Office
P.O. Box 1450
Alexandria, VA 22313-1450
www.uspto.gov

MAILED

JUL 29 2009

OFFICE OF PETITIONS

MICROSOFT CORPORATION
ONE MICROSOFT WAY
REDMOND WA 98052-6399

In re Application of	:	
Viswanath Vadlamani et al	:	
Application No. 11/583,465	:	DECISION ON PETITION
Filed: October 18, 2006	:	
Attorney Docket No. 317840.01	:	

This is a decision on the petition under the unintentional provisions of 37 CFR 1.137(b), filed June 8, 2009, to revive the above-identified application.

The petition is **GRANTED**.

The petition satisfies the conditions for revival pursuant to the provisions of 37 CFR 1.137(b) in that (1) the reply in the form of an amendment; (2) the petition fee; and (3) the required statement of unintentional delay have been received. Accordingly, the reply to the nonfinal rejection mailed August 7, 2008, is accepted as having been unintentionally delayed.

The Power of Attorney submitted on June 8, 2009, is not proper because the statement under 37 CFR 3.73(b) did not provide the attorney's registration number. See 37 CFR 1.4(d)(2)(ii). A courtesy copy of this decision is being mailed to the Customer No. provided in the Power of Attorney.

Telephone inquiries concerning this decision should be directed to the undersigned at (571) 272-3208.

This application is being referred to Technology Center AU 2169 for appropriate action by the Examiner in the normal course of business on the reply received June 8, 2009.

/KOC/
Karen Creasy
Petitions Examiner
Office of Petitions

cc:

MICROSOFT CORPORATION
ONE MICROSOFT WAY
REDMOND, WA 98052

UNITED STATES PATENT AND TRADEMARK OFFICE

Commissioner for Patents
United States Patent and Trademark Office
P.O. Box 1450
Alexandria, VA 22313-1450
www.uspto.gov

Bo-In Lin
13445 Mandoli Drive
Los Altos Hills CA 94022

COPY MAILED

APR 0 4 2007

OFFICE OF PETITIONS

In re Application of	:	
Jian Liu	:	
Application No. 11/583490	:	
Filing or 371(c) Date: 10/17/2006	:	
Attorney Docket Number:	:	DECISION
Liujian0612	:	ON PETITION

This is a decision on the "Petition to Grant the Filing Date in Response to Notice of Incomplete Nonprovisional Application", filed December 23, 2006, requesting the above-identified application be accorded a filing date of October 17, 2006. The delay in treating this petition is regretted.

The petition is granted.

The application was filed on October 17, 2006. On November 6, 2006, the Office of Initial Patent Examination mailed a Notice of Incomplete Nonprovisional Application (hereinafter "Notice"), informing Applicant that the application had NOT been accorded a filing date because the application had been deposited without drawings.

Applicant responds with the instant petition and avers that three (3) pages of drawings were filed in the application on October 17, 2006. In support of this assertion, Applicant files a copy of his return-receipt postcard acknowledging receipt of 3 pages of drawings by this Office on October 17, 2006.

"A postcard receipt which itemizes and properly identifies the papers which are being filed serves as *prima facie* evidence of receipt in the PTO of all items listed thereon by the PTO." MPEP § 503.

Accordingly, the petition is granted.

In view of the above, the Notice was mailed in error and is hereby withdrawn.

A refund of the petition fee[1] via Treasury Check has been scheduled.

The copy of 3 pages of drawings, filed with the instant petition, will be used for examination purposes.

This application is being forwarded to the Office of Initial Patent Examination, Customer Corrections, for further processing, with the filing date of October 17, 2006, and an indication that 3 pages of drawings were present on October 17, 2006, using the 3 pages of drawings filed with the present petition on December 23, 2006.

Telephone inquiries concerning this matter should be directed to the undersigned at (571-272-3232.

Derek L. Woods
Attorney
Office of Petitions

[1] Applicant is advised that the current fee for a petition to accord a filing date is $400.00.

UNITED STATES PATENT AND TRADEMARK OFFICE

UNITED STATES DEPARTMENT OF COMMERCE
United States Patent and Trademark Office
Address: COMMISSIONER FOR PATENTS
P.O. Box 1450
Alexandria, Virginia 22313-1450
www.uspto.gov

DAVID K. LUCENTE; SEAGATE TECHNOLOGY LLC
INTELLECTUAL PROPERTY DEPT. - COL2LGL
389 DISC DRIVE
LONGMONT, CO 80503

Mail Date: 04/21/2010

Applicant	: Bruce A. Liikanen	: DECISION ON REQUEST FOR
Patent Number	: 7617358	: RECALCULATION of PATENT
Issue Date	: 11/10/2009	: TERM ADJUSTMENT IN VIEW
Appliction No	: 11/583,502	: OF WYETH AND NOTICE OF INTENT TO
Filed	: 10/19/2006	: ISSUE CERTIFICATE OF CORRECTION
		:

The Request for Recalculation is **GRANTED** to the extent indicated.

The patent term adjustment has been determined to be **388** days. The USPTO will *sua sponte* issue a certificate of correction reflecting the amount of PTA days determined by the recalculation.

Prior to the issuance of the certificate of correction, the USPTO will afford patentee an opportunity to be heard and request reconsideration. Accordingly, patentee has **one month or thirty (30) days**, whichever is longer, to file a request for reconsideration of this patent term adjustment calculation. See 35 U.S.C. 154(b)(3)(B)(ii) and 37 CFR 1.322(a)(4). No extensions of time will be granted under 37 CFR 1.136.

Patentee should use document code PET.OP if electronically filing a request for reconsideration of this patent term adjustment calculation. The patentee must also include the information required by 37 CFR 1.705(b)(2) and the fee required by 37 CFR 1.18(e). If patentee does not file a timely request for reconsideration of this patent term adjustment calculation including the information required by 37 CFR 1.705(b)(2) and the fee required by 37 CFR 1.18(e), the USPTO will issue a certificate of correction reflecting the PTA determination noted above.

Patentee should be aware that in order to preserve the right to review in the United States District Court for the District of Columbia of the USPTO patent term adjustment determination, patentee must ensure that he or she also take the steps required under 35 U.S.C. 154(b)(4)(A) in a timely manner. Nothing in the request for recalculation should be construed as providing an alternative time frame for commencing a civil action under 35 U.S.C. 154(b)(4)(A).

Any questions concerning this decision should be directed to the Office of Patent Legal Administration at 571-272-7702.

UNITED STATES PATENT AND TRADEMARK OFFICE

UNITED STATES DEPARTMENT OF COMMERCE
United States Patent and Trademark Office
Address: COMMISSIONER FOR PATENTS
P.O. Box 1450
Alexandria, Virginia 22313-1450
www.uspto.gov

DAVID K. LUCENTE; SEAGATE TECHNOLOGY LLC
INTELLECTUAL PROPERTY DEPT. - COL2LGL
389 DISC DRIVE
LONGMONT, CO 80503

Mail Date: 05/18/2010

Applicant : Bruce A. Liikanen
Patent Number : 7617358
Issue Date : 11/10/2009
Application No : 11/583,502
Filed : 10/19/2006

: NOTICE CONCERNING IMPROPER
: CALCULATION OF PATENT TERM
: ADJUSTMENT BASED UPON USPTO
: IMPROPERLY MEASURING REDUCTION
: PERIOD UNDER 37 CFR 1.704(c)(10).

The United States Patent and Trademark Office (USPTO) discovered that in processing the recent recalculation decisions mailed in response to patentee's filed Request for Recalculation of Patent Term Adjustment in view of Wyeth, the USPTO improperly measured the reduction period for reductions under 37 CFR 1.704(c)(10). Pursuant to 37 CFR 1.704(c)(10), patentee's reduction begins on the date of filing the amendment under 37 CFR 1.312 ("1.312 amendment") or other related paper and ends on the date that the Office mails a response to the filing of the 1.312 amendment or other paper. It has been discovered that during the recalculation, the calculation failed to the limit the reduction to the mail date of the response to the 1.312 amendment or other paper. Accordingly, patentee's reductions were greater than warranted.

This notice **VACATES** the previous GRANTED request for recalculation and provides patentee with a revised GRANTED recalculation.

The patent term adjustment has been determined to be **396** days. The USPTO will *sua sponte* issue a certificate of correction reflecting the amount of patent term adjustment (PTA) days determined by the recalculation.

Prior to the issuance of the certificate of correction, the USPTO will afford patentee an opportunity to be heard and request reconsideration. Accordingly, patentee has **one month or thirty (30) days** from the mail date of this notice, whichever is longer, to file a request for reconsideration of this PTA calculation. See 35 U.S.C. § 154(b)(3)(B)(ii) and 37 CFR 1.322(a)(4).

Patentee should use document code PET.OP if electronically filing a request for reconsideration of this PTA calculation. The patentee must also include the information required by 37 CFR 1.705(b)(2), and the fee required by 37 CFR 1.18(e). If patentee does not file a timely request for reconsideration of this PTA calculation, including the information required by 37 CFR 1.705(b)(2) and the fee required by 37 CFR 1.18(e), the USPTO will issue a certificate of correction reflecting the PTA determination noted above.

Patentee should be aware that in order to preserve the right of review of the USPTO's PTA determination in the United States District Court for the District of Columbia, patentee must ensure that the steps required under 35 U.S.C. § 154 (b)(4) are taken in a timely manner. Nothing in the request for recalculation should be construed as providing an alternative time frame for commencing a civil action under 35 U.S.C. § 154(b)(4).

UNITED STATES PATENT AND TRADEMARK OFFICE

Commissioner for Patents
United States Patent and Trademark Office
P.O. Box 1450
Alexandria, VA 22313-1450
www.uspto.gov

FINNEGAN, HENDERSON, FARABOW, GARRETT
& DUNNER LLP
901 NEW YORK AVENUE, NW
WASHINGTON, DC 20001-4413

COPY MAILED

JAN 14 2009

OFFICE OF PETITIONS

In re Application of :
Gilles Boccon-Gibod, et al. :
Application No. 11/583,526 : DECISION GRANTING PETITION
Filed: October 18, 2006 :
Attorney Docket No. 07451.0060-00000 :

This is a decision in response to the petition filed January 5, 2007, requesting that the above-identified application be accorded a filing date of October 18, 2006, instead of the presently accorded date of October 19, 2006. The delay in responding is regretted; however, the petition was just recently referred to the Office of Petitions for consideration.

Petitioner alleges that the application was deposited in "Express Mail" Service with the U. S. Postal Service (USPS) on October 18, 2006. In support, petitioners provide, *inter alia*, a copy of the "Express Mail" mailing label receipt No. EV 758329576 US, showing a "Date-In" of "10 18 06." It is noted that the label also includes a USPS stamp dated "OCT 18 2006". The same Express Mail receipt number appears on the application transmittal letter found in the file.

The Office considers the date the paper or fee is shown to have been deposited as "Express Mail" to be the "Date In" on the Express Mail label, MPEP 513. That is the date that verifies that the package was actually mailed. The evidence is convincing that the application was deposited as "Express Mail" with the USPS on October 18, 2006.

The petition is granted.

The application is being referred to the Office of Patent Application Processing (OPAP) for correction of the filing date to **October 18, 2006** and issuance of a corrected filing receipt.

Telephone inquires related to this decision should be directed to the undersigned at (571) 272-3204. Telephone inquiries related to OPAP processing should be directed to their hotline at (571) 272-4000.

Sherry D. Brinkley
Petitions Examiner
Office of Petitions

UNITED STATES PATENT AND TRADEMARK OFFICE

UNITED STATES DEPARTMENT OF COMMERCE
United States Patent and Trademark Office
Address: COMMISSIONER FOR PATENTS
P.O. Box 1450
Alexandria, Virginia 22313-1450
www.uspto.gov

CARLSON, GASKEY & OLDS, P.C.
400 WEST MAPLE ROAD
SUITE 350
BIRMINGHAM, MI 48009

Mail Date: 05/06/2010

Applicant	: Kenichi Takato	: DECISION ON REQUEST FOR
Patent Number	: 7612683	: RECALCULATION of PATENT
Issue Date	: 11/03/2009	: TERM ADJUSTMENT IN VIEW
Application No	: 11/583,530	: OF WYETH AND NOTICE OF INTENT TO
Filed	: 10/19/2006	: ISSUE CERTIFICATE OF CORRECTION
		:

The Request for Recalculation is **GRANTED** to the extent indicated.

The patent term adjustment has been determined to be **291** days. The USPTO will *sua sponte* issue a certificate of correction reflecting the amount of PTA days determined by the recalculation.

Prior to the issuance of the certificate of correction, the USPTO will afford patentee an opportunity to be heard and request reconsideration. Accordingly, patentee has **one month or thirty (30) days**, whichever is longer, to file a request for reconsideration of this patent term adjustment calculation. See 35 U.S.C. 154(b)(3)(B)(ii) and 37 CFR 1.322(a)(4). No extensions of time will be granted under 37 CFR 1.136.

Patentee should use document code PET.OP if electronically filing a request for reconsideration of this patent term adjustment calculation. The patentee must also include the information required by 37 CFR 1.705(b)(2) and the fee required by 37 CFR 1.18(e). If patentee does not file a timely request for reconsideration of this patent term adjustment calculation including the information required by 37 CFR 1.705(b)(2) and the fee required by 37 CFR 1.18(e), the USPTO will issue a certificate of correction reflecting the PTA determination noted above.

Patentee should be aware that in order to preserve the right to review in the United States District Court for the District of Columbia of the USPTO patent term adjustment determination, patentee must ensure that he or she also take the steps required under 35 U.S.C. 154(b)(4)(A) in a timely manner. Nothing in the request for recalculation should be construed as providing an alternative time frame for commencing a civil action under 35 U.S.C. 154(b)(4)(A).

Any questions concerning this decision should be directed to the Office of Patent Legal Administration at 571-272-7702.

UNITED STATES PATENT AND TRADEMARK OFFICE

Commissioner for Patents
United States Patent and Trademark Office
P.O. Box 1450
Alexandria, VA 22313-1450
www.uspto.gov

KNOBBE MARTENS OLSON & BEAR LLP
2040 MAIN STREET, FOURTEENTH FLOOR
IRVINE, CA 92614

COPY MAILED

MAR 0 9 2009

OFFICE OF PETITIONS

In re Application of

Byoungyi **YOON**
Application No. 11/583,542
Filed: October 19, 2006
Attorney Docket No. **GEORA.010C8C1**

DECISION ON PETITION TO WITHDRAW FROM RECORD UNDER 37 CFR 1.136(b)

This is a decision on the Request to Withdraw as attorney or agent of record under 37 C.F.R. § 1.36(b), filed September 29, 2008.

The request is **APPROVED**.

A grantable request to withdraw as attorney/agent of record must be signed by every attorney/agent seeking to withdraw or contain a clear indication that one attorney is signing on behalf of another/others. A request to withdraw will not be approved unless at least 30 (thirty) days would remain between the date of approval and the later of the expiration date of a time to file a response or the expiration date of the maximum time period which can be extended under 37 C.F.R. § 1.136(a).

The request was signed by John M. Carson on behalf of all attorneys of record. All attorneys/agents associated have been withdrawn. Applicant is reminded that there is no attorney of record at this time.

All future communications from the Office will be directed to the first named signing inventor Byoungyi Yoon at the first copied address below until otherwise properly notified by the applicant.

There is an outstanding Office action mailed March 17, 2008 that requires a reply from the applicant.

Telephone inquiries concerning this decision should be directed to the undersigned at 571-272-7253.

/Monica A. Graves/
Petitions Examiner, Office of Petitions

cc: **BYOUNGYI YOON**
1547 SAMSAN-DONG, NAM-GU
ULSAN 680-816, REPUBLIC OF KOREA

cc: **GEO-RAE, LTD**
486-13 TAEHWA-DONG, JOONG-GU
GWANG-YEOK-SI 681-819 KOREA

UNITED STATES PATENT AND TRADEMARK OFFICE

UNITED STATES DEPARTMENT OF COMMERCE
United States Patent and Trademark Office
Address: COMMISSIONER FOR PATENTS
P.O. Box 1450
Alexandria, Virginia 22313-1450
www.uspto.gov

QUINE INTELLECTUAL PROPERTY LAW GROUP, P.C.
P O BOX 458
ALAMEDA, CA 94501

Mail Date: 04/21/2010

Applicant	: Peter Schultz	: DECISION ON REQUEST FOR
Patent Number	: 7638300	: RECALCULATION of PATENT
Issue Date	: 12/29/2009	: TERM ADJUSTMENT IN VIEW
Appliction No	: 11/583,551	: OF WYETH AND NOTICE OF INTENT TO
Filed	: 10/18/2006	: ISSUE CERTIFICATE OF CORRECTION
		:

The Request for Recalculation is **GRANTED** to the extent indicated.

The patent term adjustment has been determined to be **0** days. The USPTO will *sua sponte* issue a certificate of correction reflecting the amount of PTA days determined by the recalculation.

Prior to the issuance of the certificate of correction, the USPTO will afford patentee an opportunity to be heard and request reconsideration. Accordingly, patentee has **one month or thirty (30) days**, whichever is longer, to file a request for reconsideration of this patent term adjustment calculation. See 35 U.S.C. 154(b)(3)(B)(ii) and 37 CFR 1.322(a)(4). No extensions of time will be granted under 37 CFR 1.136.

Patentee should use document code PET.OP if electronically filing a request for reconsideration of this patent term adjustment calculation. The patentee must also include the information required by 37 CFR 1.705(b)(2) and the fee required by 37 CFR 1.18(e). If patentee does not file a timely request for reconsideration of this patent term adjustment calculation including the information required by 37 CFR 1.705(b)(2) and the fee required by 37 CFR 1.18(e), the USPTO will issue a certificate of correction reflecting the PTA determination noted above.

Patentee should be aware that in order to preserve the right to review in the United States District Court for the District of Columbia of the USPTO patent term adjustment determination, patentee must ensure that he or she also take the steps required under 35 U.S.C. 154(b)(4)(A) in a timely manner. Nothing in the request for recalculation should be construed as providing an alternative time frame for commencing a civil action under 35 U.S.C. 154(b)(4)(A).

Any questions concerning this decision should be directed to the Office of Patent Legal Administration at 571-272-7702.

UNITED STATES PATENT AND TRADEMARK OFFICE

Commissioner for Patents
United States Patent and Trademark Office
P.O. Box 1450
Alexandria, VA 22313-1450
www.uspto.gov

STORM LLP
BANK OF AMERICA PLAZA
901 MAIN STREET, SUITE 7100
DALLAS, TX 75202

COPY MAILED

JUN 23 2008

OFFICE OF PETITIONS

In re Application of

Larry Tarrant
Application No. 11/583,561
Filed: October 19, 2007
Attorney Docket No. TARR 03870 PTUS

DECISION ON PETITION
TO WITHDRAW
FROM RECORD

This is a decision on the Request to Withdraw as attorney or agent under 37 C.F.R. § 1.36(b) or 37 C.F.R. § 10.40 filed December 12, 2007.

The request is **APPROVED**.

A review of the file record indicates that Storm LLP: (1) does not have power of attorney in this patent application; and (2) has been employed or otherwise engaged in the proceedings in this patent application. In view of the present decision, Storm, LLP has/have been withdrawn from the present application and may not prepare or submit papers under 37 C.F.R. § 1.34, or correspond in any manner in this application unless appointed in an acceptable power of attorney under 37 C.F.R. § 1.32(b).

The request to change the correspondence address of record has been accepted. All future communications from the Office will be directed to the first copied address below until otherwise properly notified by the applicant.

Applicant is reminded that there is no attorney of record at this time.

There are no pending Office actions at the present time.

Telephone inquires concerning this decision should be directed to undersigned at 571-272-1642.

April M. Wise
Petitions Examiner
Office of Petitions

cc: LARRY TARRANT
421 RANCHERO DRIVE
SUNNYVALE, TX 75182

UNITED STATES PATENT AND TRADEMARK OFFICE

UNITED STATES DEPARTMENT OF COMMERCE
United States Patent and Trademark Office
Address: COMMISSIONER FOR PATENTS
P.O. Box 1450
Alexandria, Virginia 22313-1450
www.uspto.gov

APPLICATION NUMBER	FILING OR 371(C) DATE	FIRST NAMED APPLICANT	ATTY. DOCKET NO./TITLE
11/583,561	10/19/2006	Larry Tarrant	TARR 03870 PTUS

CONFIRMATION NO. 4312

POWER OF ATTORNEY NOTICE

OC000000030592717

32233
STORM LLP
BANK OF AMERICA PLAZA
901 MAIN STREET, SUITE 7100
DALLAS, TX 75202

Date Mailed: 06/20/2008

NOTICE REGARDING CHANGE OF POWER OF ATTORNEY

This is in response to the Power of Attorney filed 12/12/2007.

- The withdrawal as attorney in this application has been accepted. Future correspondence will be mailed to the new address of record. 37 CFR 1.33.

/amwise/

Office of Data Management, Application Assistance Unit (571) 272-4000, or (571) 272-4200, or 1-888-786-0101

UNITED STATES PATENT AND TRADEMARK OFFICE

UNITED STATES DEPARTMENT OF COMMERCE
United States Patent and Trademark Office
Address: COMMISSIONER FOR PATENTS
P.O. Box 1450
Alexandria, Virginia 22313-1450
www.uspto.gov

APPLICATION NO.	FILING DATE	FIRST NAMED INVENTOR	ATTORNEY DOCKET NO.	CONFIRMATION NO.
11/583,592	10/18/2006	William Howard Karau	107724.00004	3866

33649 7590 04/06/2010
Mr. Christopher John Rourk
Jackson Walker LLP
901 Main Street, Suite 6000
DALLAS, TX 75202

EXAMINER
GRANT, ALVIN J

ART UNIT	PAPER NUMBER
3723	

MAIL DATE	DELIVERY MODE
04/06/2010	PAPER

Please find below and/or attached an Office communication concerning this application or proceeding.

The time period for reply, if any, is set in the attached communication.

UNITED STATES PATENT AND TRADEMARK OFFICE

Commissioner for Patents
United States Patent and Trademark Office
P.O. Box 1450
Alexandria, VA 22313-1450
www.uspto.gov

Mr. Christopher John Rourk
Jackson Walker LLP
901 Main Street, Suite 6000
DALLAS TX 75202

In re Application of:
KARAU, WILLIAM HOWARD et al
Serial No.: 11/583,592
Filed: Oct. 18, 2006
Docket: 107724.00004
Title: CONCRETE BLOCK SPLITTING AND PITCHING APPARATUS AND METHOD

DECISION ON PETITION

This is a decision on the petition filed on March 29, 2010 requesting withdrawal of the examiner's Office action mailed December 29, 2009 for lack of the SPE's signature and issuance of an Examiner's Answer based on the Appeal Brief filed September 29, 2009. This petition is being considered pursuant to 37 CFR § 1.181(a) (3).

The petition is dismissed.

In the petition, the petitioner requests that the Director to withdraw the Office action of December 29, 2009 and require the examiner to prepare an Examiner's Answer to the Appeal Brief filed on September 2, 2009 because the re-opening of prosecution was not accompanied by the signature of a Supervisory Patent Examiner.

The record shows that:

1) On December 29, 2009 apparently after consideration of the Appeal Brief filed on September 2, 2009, the examiner re-opened prosecution by introducing a new reference, Scherer, U.S. Pat. 6,918,715 to the rejection. There was a new provisional Obviousness Double Patenting rejection also added, The Office action was made non-final to provide the applicant an opportunity to respond to the newly found prior art reference and new grounds of rejection in accordance with M.P.E.P. § 1207.04[1]. The non-final Office action of December 29, 2009

[1] M.P.E.P. 1207.04 [R-3] Reopening of Prosecution After Appeal. The examiner may, with approval from the supervisory patent examiner, reopen prosecution to enter a new ground of rejection after appellant's brief or reply brief has been filed. The Office action containing a new ground of rejection may be made final if the new ground of rejection was (A) necessitated by amendment, or (B) based on information presented in an information disclosure statement under 37 CFR 1.97(c) where no statement under 37 CFR 1.97(e) was filed. See MPEP § 706.07(a).Any after final amendment or affidavit or other evidence that was not entered before must be entered and considered on the merits.

contains no signature of a Supervisor Patent Examiner. It appears the signature of a Supervisory Patent Examiner was inadvertently omitted.

3) Three months after the non-final Office action, on March 29, 2010, the current petition was filed to request withdrawal of the Office action of December 29, 2009 and issuance of an Examiner's Answer to the Appeal Brief of September 2, 2009 so that the appeal process to the Board of Appeals and Interferences may commence.

Discussion and Analysis

A review of the last Office action mailed on December 29, 2009 shows that the examiner's action with new grounds of rejection contains no error and is in full compliance with M.P.E.P. § 1207.04. The office action does not appear to be arbitrary and capricious. It is noted in the petition that the petitioner does not challenge the propriety and the contents of the non-final Office action of December 29, 209. Petitioner only indicates that the signature of a Supervisory Patent Examiner was omitted. Under the circumstances, therefore, there is no need to withdraw the Office action of December 29, 2009. However, it is noted that the SPE's approval for re-opening prosecution is missing in the non-final Office action of December 29, 2009. In order to provide the missing signature, a supplemental non-final Office action with the SPE's approval will be mailed in due course.

With regard to the new non-final Office action of December 29, 2009 after the filing of the appeal brief, Office policy requires examiners to complete a thorough prior art search, and avoid piecemeal examination as much as possible. Regrettably, due to the late discovery of prior art, prosecution of the applicant's case has been unavoidably prolonged. Petitions to the Technology Center (TC) Director generally involve procedural errors and not issues to the merits of the case. These petitions are usually for non-appealable issues in accordance with 37 CFR § 1.181(a) (1)[2]. Since the applied prior art involves the merits of the case, and the application of the prior art does not appear to be arbitrary and capricious, it is appropriate that the new issues generated by the newly applied prior art be properly be resolved before the examiner or taken up on appeal with the Board of Patent Appeals and Interferences. Moreover, it is the Primary Examiner's duty to consider the merits of the claims as provided in MPEP § 1004. A TC Director can not compel an examiner to ignore prior art references and direct the examiner to withdraw a rejection or allow an application. Because this matter is appealable, it does not fall within the TC Director's discretion in accordance with 37 CFR § 1.181. Under the circumstances, the requested relief for withdrawal or removal of the rejection of December 29, 2009 cannot be granted by petition.

In response to this decision, petitioner is urged to respond to the rejection of December 29, 2009 by filing a new appeal brief. It is noted that a new notice of appeal was filed with the petition on March 29, 2009. However, the examiner is instructed to expediently proceed with the examination of the application while also taking into consideration of Office policy discouraging

---

[2] 37 CFR § 1.181(a)(1) states: Petition may be taken to the Director: (1) From any action or requirement of any examiner in the ex parte prosecution of an application, or in the ex parte or inter partes prosecution of a reexamination proceeding which is not subject to appeal to the Board of Patent Appeals and Interferences or to the court.

piece meal prosecution under M.P.E.P § 707.07(g)[3]. Finally, in order to avoid further re-opening of the prosecution, the examiner is reminded in the future to perform a complete and thorough search of prior art considering not only the claims presented, but also any subject matter the examiner reasonably anticipates might be incorporated into a subsequent amendment in accordance with MPEP § 904.03[4] .

Conclusion

For the forgoing reasons, the relief requested by the petitioner will not be granted, because such relief is not the type which can be granted by petition. The application is being forwarded to the Supervisory Patent Examiner in Art Unit 3723 waiting for the applicant's response to the non-final Office action of December 29, 2009. Any request for reconsideration of this decision must be submitted within TWO (2) MONTHS from the mail date of this decision, 37 CFR §1.181. No extension of time under 37 CFR § 1.136(a) is permitted. The reconsideration request should include a cover letter entitled "Renewed Petition under 37 CFR § 1.181". Any inquiry regarding this decision should be directed to Henry Yuen, Special Programs Examiner, at (571) 272-4856.

PETITION DISMISSED.

Robert Olszewski, Director
Technology Center 3700

[3] M.P.E.P. § 707.07(g) states: Piecemeal examination should be avoided as much as possible. The examiner ordinarily should reject each claim on all valid grounds available, avoiding, how-ever, undue multiplication of references.

[4] M.P.E.P. § 904.03 states in relevant part: "It is normally not enough that references be selected to meet only the terms of the claims alone, especially if only broad claims are presented; but the search should, insofar as possible, also cover all subject matter which the examiner reasonably anticipates might be incorporated into applicant's amendment."

UNITED STATES PATENT AND TRADEMARK OFFICE

UNITED STATES DEPARTMENT OF COMMERCE
United States Patent and Trademark Office
Address: COMMISSIONER FOR PATENTS
P.O. Box 1450
Alexandria, Virginia 22313-1450
www.uspto.gov

HEAD, JOHNSON & KACHIGIAN
228 W 17TH PLACE
TULSA, OK 74119

Mail Date: 04/21/2010

Applicant	: Klaus Manfred Steinich	: DECISION ON REQUEST FOR
Patent Number	: 7619405	: RECALCULATION of PATENT
Issue Date	: 11/17/2009	: TERM ADJUSTMENT IN VIEW
Appliction No	: 11/583,611	: OF WYETH AND NOTICE OF INTENT TO
Filed	: 10/19/2006	: ISSUE CERTIFICATE OF CORRECTION
		:

The Request for Recalculation is **GRANTED** to the extent indicated.

The patent term adjustment has been determined to be **433** days. The USPTO will *sua sponte* issue a certificate of correction reflecting the amount of PTA days determined by the recalculation.

Prior to the issuance of the certificate of correction, the USPTO will afford patentee an opportunity to be heard and request reconsideration. Accordingly, patentee has **one month or thirty (30) days**, whichever is longer, to file a request for reconsideration of this patent term adjustment calculation. See 35 U.S.C. 154(b)(3)(B)(ii) and 37 CFR 1.322(a)(4). No extensions of time will be granted under 37 CFR 1.136.

Patentee should use document code PET.OP if electronically filing a request for reconsideration of this patent term adjustment calculation. The patentee must also include the information required by 37 CFR 1.705(b)(2) and the fee required by 37 CFR 1.18(e). If patentee does not file a timely request for reconsideration of this patent term adjustment calculation including the information required by 37 CFR 1.705(b)(2) and the fee required by 37 CFR 1.18(e), the USPTO will issue a certificate of correction reflecting the PTA determination noted above.

Patentee should be aware that in order to preserve the right to review in the United States District Court for the District of Columbia of the USPTO patent term adjustment determination, patentee must ensure that he or she also take the steps required under 35 U.S.C. 154(b)(4)(A) in a timely manner. Nothing in the request for recalculation should be construed as providing an alternative time frame for commencing a civil action under 35 U.S.C. 154(b)(4)(A).

Any questions concerning this decision should be directed to the Office of Patent Legal Administration at 571-272-7702.

UNITED STATES PATENT AND TRADEMARK OFFICE

UNITED STATES DEPARTMENT OF COMMERCE
United States Patent and Trademark Office
Address: COMMISSIONER FOR PATENTS
P.O. Box 1450
Alexandria, Virginia 22313-1450
www.uspto.gov

DAVID K. LUCENTE; SEAGATE TECHNOLOGY LLC
INTELLECTUAL PROPERTY DEPT. - COL2LGL
389 DISC DRIVE
LONGMONT, CO 80503

Mail Date: 04/21/2010

Applicant	: Bruce A. Liikanen	: DECISION ON REQUEST FOR
Patent Number	: 7603530	: RECALCULATION of PATENT
Issue Date	: 10/13/2009	: TERM ADJUSTMENT IN VIEW
Appliction No	: 11/583,623	: OF WYETH AND NOTICE OF INTENT TO
Filed	: 10/19/2006	: ISSUE CERTIFICATE OF CORRECTION
		:

The Request for Recalculation is **GRANTED** to the extent indicated.

The patent term adjustment has been determined to be **611** days. The USPTO will *sua sponte* issue a certificate of correction reflecting the amount of PTA days determined by the recalculation.

Prior to the issuance of the certificate of correction, the USPTO will afford patentee an opportunity to be heard and request reconsideration. Accordingly, patentee has **one month or thirty (30) days**, whichever is longer, to file a request for reconsideration of this patent term adjustment calculation. See 35 U.S.C. 154(b)(3)(B)(ii) and 37 CFR 1.322(a)(4). No extensions of time will be granted under 37 CFR 1.136.

Patentee should use document code PET.OP if electronically filing a request for reconsideration of this patent term adjustment calculation. The patentee must also include the information required by 37 CFR 1.705(b)(2) and the fee required by 37 CFR 1.18(e). If patentee does not file a timely request for reconsideration of this patent term adjustment calculation including the information required by 37 CFR 1.705(b)(2) and the fee required by 37 CFR 1.18(e), the USPTO will issue a certificate of correction reflecting the PTA determination noted above.

Patentee should be aware that in order to preserve the right to review in the United States District Court for the District of Columbia of the USPTO patent term adjustment determination, patentee must ensure that he or she also take the steps required under 35 U.S.C. 154(b)(4)(A) in a timely manner. Nothing in the request for recalculation should be construed as providing an alternative time frame for commencing a civil action under 35 U.S.C. 154(b)(4)(A).

Any questions concerning this decision should be directed to the Office of Patent Legal Administration at 571-272-7702.

UNITED STATES PATENT AND TRADEMARK OFFICE

Commissioner for Patents
United States Patent and Trademark Office
P.O. Box 1450
Alexandria, VA 22313-1450
www.uspto.gov

SAWYER LAW GROUP LLP
PO BOX 51418
PALO ALTO, CA 94303

COPY MAILED

MAR 1 4 2008

OFFICE OF PETITIONS

In re Application of
Lorenzo BEDARIDA, et al
Application No. 11/583,625
Filed: October 18, 2006
Attorney Docket No. 3218C

DECISION ON PETITION
TO WITHDRAW
FROM RECORD

This is a decision on the Request to Withdraw as attorney or agent of record under 37 C.F.R. § 1.36(b), filed January 18, 2008.

The request is **NOT APPROVED**.

A grantable request to withdraw as attorney/agent of record must be signed by every attorney/agent seeking to withdraw or contain a clear indication that one attorney is signing on behalf of another/others. A request to withdraw will not be approved unless at least 30 (thirty) days would remain between the date of approval and the later of the expiration date of a time to file a response or the expiration date of the maximum time period which can be extended under 37 C.F.R. § 1.136(a).

The request cannot be approved because the attorneys of record were not appointed by customer number.

All future communications from the Office will continue to be directed to the above-listed address until otherwise notified by applicant.

There is an outstanding Office action mailed February 25, 2008 that requires a reply by applicant.

Telephone inquiries concerning this decision should be directed to the undersigned at 571-272-6735.

Diane Goodwyn
Petitions Examiner
Office of Petitions

cc: SCHWEGMAN, LUNDBERG
WOESSNER/ATMEL
P.O. BOX 2938
MINNEAPOLIS, MN 55402

UNITED STATES PATENT AND TRADEMARK OFFICE

UNITED STATES DEPARTMENT OF COMMERCE
United States Patent and Trademark Office
Address: COMMISSIONER FOR PATENTS
P.O. Box 1450
Alexandria, Virginia 22313-1450
www.uspto.gov

APPLICATION NO.	FILING DATE	FIRST NAMED INVENTOR	ATTORNEY DOCKET NO.	CONFIRMATION NO.
11/583,670	10/19/2006	William D. Denison	MET-061192	5731

7590 02/18/2009

FACTOR & LAKE, LTD.
Suite 5G/H
1327 W. Washington Blvd.
Chicago, IL 60607

EXAMINER
ZIMMERMAN, BRIAN A

ART UNIT	PAPER NUMBER
2612	

MAIL DATE	DELIVERY MODE
02/18/2009	PAPER

DECISION GRANTING PETITION UNDER 37 CFR 1.138(d)

The declaration of express abandonment is recognized

This is in response to the petition under 37 CFR 1.138(d), requesting for a refund of any previously paid search fee and excess claims fee in the above-identified application.

The petition is granted.

The express abandonment is recognized. Any previously paid search fee and excess claims fee are hereby refunded.

Telephone inquiries should be directed to the Office of Data Management at (571) 272-4200.

Betty Powell

Patent Publication Branch
Office of Data Management

Repln. Ref: 02/19/2009 BPOWELL 0015391100
DAH:500545 Name/Number:11137257
FC: 9204 $1625.00 CR

Adjustment date: 02/19/2009 BPOWELL
10/23/2006 SSITHIB1 00000080 11583670
02 FC:2111 -250.00 OP
04 FC:2202 -550.00 OP

FORM PET651G (Rev. 08/07)

Repln. Ref: 02/19/2009 BPOWELL 0015411200
DA#:500545 Name/Number:11503670
FC: 9204 $800.00 CR

UNITED STATES PATENT AND TRADEMARK OFFICE

UNITED STATES DEPARTMENT OF COMMERCE
United States Patent and Trademark Office
Address: COMMISSIONER FOR PATENTS
P.O. Box 1450
Alexandria, Virginia 22313-1450
www.uspto.gov

STERNE, KESSLER, GOLDSTEIN & FOX P.L.L.C.
1100 NEW YORK AVENUE, N.W.
WASHINGTON, DC 20005

Mail Date: 04/21/2010

Applicant	: Ajay Chandra Gummalla	: DECISION ON REQUEST FOR
Patent Number	: 7613161	: RECALCULATION of PATENT
Issue Date	: 11/03/2009	: TERM ADJUSTMENT IN VIEW
Appliction No	: 11/583,714	: OF WYETH AND NOTICE OF INTENT TO
Filed	: 10/20/2006	: ISSUE CERTIFICATE OF CORRECTION
		:

The Request for Recalculation is **GRANTED** to the extent indicated.

The patent term adjustment has been determined to be **111** days. The USPTO will *sua sponte* issue a certificate of correction reflecting the amount of PTA days determined by the recalculation.

Prior to the issuance of the certificate of correction, the USPTO will afford patentee an opportunity to be heard and request reconsideration. Accordingly, patentee has **one month or thirty (30) days**, whichever is longer, to file a request for reconsideration of this patent term adjustment calculation. See 35 U.S.C. 154(b)(3)(B)(ii) and 37 CFR 1.322(a)(4). No extensions of time will be granted under 37 CFR 1.136.

Patentee should use document code PET.OP if electronically filing a request for reconsideration of this patent term adjustment calculation. The patentee must also include the information required by 37 CFR 1.705(b)(2) and the fee required by 37 CFR 1.18(e). If patentee does not file a timely request for reconsideration of this patent term adjustment calculation including the information required by 37 CFR 1.705(b)(2) and the fee required by 37 CFR 1.18(e), the USPTO will issue a certificate of correction reflecting the PTA determination noted above.

Patentee should be aware that in order to preserve the right to review in the United States District Court for the District of Columbia of the USPTO patent term adjustment determination, patentee must ensure that he or she also take the steps required under 35 U.S.C. 154(b)(4)(A) in a timely manner. Nothing in the request for recalculation should be construed as providing an alternative time frame for commencing a civil action under 35 U.S.C. 154(b)(4)(A).

Any questions concerning this decision should be directed to the Office of Patent Legal Administration at 571-272-7702.

UNITED STATES PATENT AND TRADEMARK OFFICE

UNITED STATES DEPARTMENT OF COMMERCE
United States Patent and Trademark Office
Address: COMMISSIONER FOR PATENTS
P.O. Box 1450
Alexandria, Virginia 22313-1450
www.uspto.gov

STERNE, KESSLER, GOLDSTEIN & FOX P.L.L.C.
1100 NEW YORK AVENUE, N.W.
WASHINGTON, DC 20005

Mail Date: 05/18/2010

Applicant : Ajay Chandra Gummalla
Patent Number : 7613161
Issue Date : 11/03/2009
Application No : 11/583,714
Filed : 10/20/2006

: NOTICE CONCERNING IMPROPER
: CALCULATION OF PATENT TERM
: ADJUSTMENT BASED UPON USPTO
: IMPROPERLY MEASURING REDUCTION
: PERIOD UNDER 37 CFR 1.704(c)(10).

The United States Patent and Trademark Office (USPTO) discovered that in processing the recent recalculation decisions mailed in response to patentee's filed Request for Recalculation of Patent Term Adjustment in view of Wyeth, the USPTO improperly measured the reduction period for reductions under 37 CFR 1.704(c)(10). Pursuant to 37 CFR 1.704(c)(10), patentee's reduction begins on the date of filing the amendment under 37 CFR 1.312 ("1.312 amendment") or other related paper and ends on the date that the Office mails a response to the filing of the 1.312 amendment or other paper. It has been discovered that during the recalculation, the calculation failed to the limit the reduction to the mail date of the response to the 1.312 amendment or other paper. Accordingly, patentee's reductions were greater than warranted.

This notice **VACATES** the previous GRANTED request for recalculation and provides patentee with a revised GRANTED recalculation.

The patent term adjustment has been determined to be **147** days. The USPTO will *sua sponte* issue a certificate of correction reflecting the amount of patent term adjustment (PTA) days determined by the recalculation.

Prior to the issuance of the certificate of correction, the USPTO will afford patentee an opportunity to be heard and request reconsideration. Accordingly, patentee has **one month or thirty (30) days** from the mail date of this notice, whichever is longer, to file a request for reconsideration of this PTA calculation. See 35 U.S.C. § 154(b)(3)(B)(ii) and 37 CFR 1.322(a)(4).

Patentee should use document code PET.OP if electronically filing a request for reconsideration of this PTA calculation. The patentee must also include the information required by 37 CFR 1.705(b)(2), and the fee required by 37 CFR 1.18(e). If patentee does not file a timely request for reconsideration of this PTA calculation, including the information required by 37 CFR 1.705(b)(2) and the fee required by 37 CFR 1.18(e), the USPTO will issue a certificate of correction reflecting the PTA determination noted above.

Patentee should be aware that in order to preserve the right of review of the USPTO's PTA determination in the United States District Court for the District of Columbia, patentee must ensure that the steps required under 35 U.S.C. § 154 (b)(4) are taken in a timely manner. Nothing in the request for recalculation should be construed as providing an alternative time frame for commencing a civil action under 35 U.S.C. § 154(b)(4).

UNITED STATES PATENT AND TRADEMARK OFFICE

Commissioner for Patents
United States Patent and Trademark Office
P.O. Box 1450
Alexandria, VA 22313-1450
www.uspto.gov

BROWDY AND NEIMARK, P.L.L.C.
624 NINTH STREET, NW
SUITE 300
WASHINGTON DC 20001-5303

MAILED

MAY 25 2010

OFFICE OF PETITIONS

In re Patent No. 7,683,645
Issue Date: March 23, 2010
Application No. 11/583,740
Filed: October 20, 2006
Attorney Docket No. KU2

NOTICE

This is a notice regarding your request for acceptance of a fee deficiency submission under 37 CFR 1.28 filed February 2, 2010.

The Office no longer investigates or rejects original or reissue applications under 37 CFR 1.56. **1098 Off. Gaz. Pat. Office 502 (January 3, 1989)**. Therefore, nothing in this Notice is intended to imply that an investigation was done.

Your fee deficiency submission under 37 CFR 1.28 is hereby **ACCEPTED**.

This patent is no longer entitled to small entity status. Accordingly, all future fees paid in this patent must be paid at the large entity rate.

Inquiries related to this communication should be directed to the undersigned at (571) 272-3215.

Charlema Grant
Petitions Attorney
Office of Petitions

UNITED STATES PATENT AND TRADEMARK OFFICE

Commissioner for Patents
United States Patent and Trademark Office
P.O. Box 1450
Alexandria, VA 22313-1450
www.uspto.gov

ERIC ROBINSON
PMB 955
21010 SOUTHBANK ST.
POTOMAC FALLS, VA 20165

COPY MAILED

SEP 1 0 2008

OFFICE OF PETITIONS

In re Application of	:	
Koichiro Tanaka	:	
Application No.: 11/583,743	:	ON PETITION
Filed: October 20, 2006	:	
Attorney Docket No.: 0756-7843	:	

This is a decision on the petition, filed September 9, 2008, under 37 CFR 1.313(c)(2) to withdraw the above-identified application from issue after payment of the issue fee.

The petition is **GRANTED**.

The above-identified application is withdrawn from issue for consideration of a submission under 37 CFR 1.114 (request for continued examination). See 37 CFR 1.313(c)(2).

Petitioner is advised that the issue fee paid on May 15, 2008, using a Certificate of Mailing or Transmission under 37 CFR 1.8 dated May 14, 2008, cannot be refunded. If, however, this application is again allowed, petitioner may request that it be applied towards the issue fee required by the new Notice of Allowance.[1]

Telephone inquiries relating to this decision should be directed to the undersigned at (571) 272-3204.

The application is being referred to Technology Center AU 2818 for further processing of the request for continued examination under 37 CFR 1.114 and for consideration of the concurrently filed Information Disclosure Statement.

Sherry D. Brinkley
Petitions Examiner
Office of Petitions

[1] *The request to apply the issue fee to the new Notice may be satisfied by completing and returning the new Part B - Fee(s) Transmittal Form (along with any balance due at the time of submission). Petitioner is advised that the Issue Fee Transmittal Form must be completed and timely submitted to avoid abandonment of the application.*

UNITED STATES PATENT AND TRADEMARK OFFICE

Commissioner for Patents
United States Patent and Trademark Office
P.O. Box 1450
Alexandria, VA 22313-1450
www.uspto.gov

OIPE IAP95
JAN 21 2009
PATENT & TRADEMARK OFFICE

ERIC ROBINSON
PMB 955
21010 SOUTHBANK ST.
POTOMAC FALLS, VA 20165

RECEIVED
BY: gm 9/12/08

COPY MAILED

SEP 10 2008

OFFICE OF PETITIONS

In re Application of	:	
Koichiro Tanaka	:	
Application No.: 11/583,743	:	ON PETITION
Filed: October 20, 2006	:	
Attorney Docket No.: 0756-7843	:	

This is a decision on the petition, filed September 9, 2008, under 37 CFR 1.313(c)(2) to withdraw the above-identified application from issue after payment of the issue fee.

The petition is **GRANTED**.

The above-identified application is withdrawn from issue for consideration of a submission under 37 CFR 1.114 (request for continued examination). See 37 CFR 1.313(c)(2).

Petitioner is advised that the issue fee paid on May 15, 2008, using a Certificate of Mailing or Transmission under 37 CFR 1.8 dated May 14, 2008, cannot be refunded. If, however, this application is again allowed, petitioner may request that it be applied towards the issue fee required by the new Notice of Allowance.[1]

Telephone inquiries relating to this decision should be directed to the undersigned at (571) 272-3204.

The application is being referred to Technology Center AU 2818 for further processing of the request for continued examination under 37 CFR 1.114 and for consideration of the concurrently filed Information Disclosure Statement.

Sherry D. Brinkley
Petitions Examiner
Office of Petitions

[1] *The request to apply the issue fee to the new Notice may be satisfied by completing and returning the new Part B - Fee(s) Transmittal Form (along with any balance due at the time of submission). Petitioner is advised that the Issue Fee Transmittal Form must be completed and timely submitted to avoid abandonment of the application.*

UNITED STATES PATENT AND TRADEMARK OFFICE

UNITED STATES DEPARTMENT OF COMMERCE
United States Patent and Trademark Office
Address: COMMISSIONER FOR PATENTS
P.O. Box 1450
Alexandria, Virginia 22313-1450
www.uspto.gov

DAVID K. LUCENTE; SEAGATE TECHNOLOGY LLC
INTELLECTUAL PROPERTY DEPT. - COL2LGL
389 DISC DRIVE
LONGMONT, CO 80503

Mail Date: 04/21/2010

Applicant	: Bruce A. Liikanen	: DECISION ON REQUEST FOR
Patent Number	: 7653847	: RECALCULATION of PATENT
Issue Date	: 01/26/2010	: TERM ADJUSTMENT IN VIEW
Appliction No	: 11/583,767	: OF WYETH AND NOTICE OF INTENT TO
Filed	: 10/19/2006	: ISSUE CERTIFICATE OF CORRECTION
		:

The Request for Recalculation is **GRANTED** to the extent indicated.

The patent term adjustment has been determined to be **504** days. The USPTO will *sua sponte* issue a certificate of correction reflecting the amount of PTA days determined by the recalculation.

Prior to the issuance of the certificate of correction, the USPTO will afford patentee an opportunity to be heard and request reconsideration. Accordingly, patentee has **one month or thirty (30) days**, whichever is longer, to file a request for reconsideration of this patent term adjustment calculation. See 35 U.S.C. 154(b)(3)(B)(ii) and 37 CFR 1.322(a)(4). No extensions of time will be granted under 37 CFR 1.136.

Patentee should use document code PET.OP if electronically filing a request for reconsideration of this patent term adjustment calculation. The patentee must also include the information required by 37 CFR 1.705(b)(2) and the fee required by 37 CFR 1.18(e). If patentee does not file a timely request for reconsideration of this patent term adjustment calculation including the information required by 37 CFR 1.705(b)(2) and the fee required by 37 CFR 1.18(e), the USPTO will issue a certificate of correction reflecting the PTA determination noted above.

Patentee should be aware that in order to preserve the right to review in the United States District Court for the District of Columbia of the USPTO patent term adjustment determination, patentee must ensure that he or she also take the steps required under 35 U.S.C. 154(b)(4)(A) in a timely manner. Nothing in the request for recalculation should be construed as providing an alternative time frame for commencing a civil action under 35 U.S.C. 154(b)(4)(A).

Any questions concerning this decision should be directed to the Office of Patent Legal Administration at 571-272-7702.

UNITED STATES PATENT AND TRADEMARK OFFICE

UNITED STATES DEPARTMENT OF COMMERCE
United States Patent and Trademark Office
Address: COMMISSIONER FOR PATENTS
P.O. Box 1450
Alexandria, Virginia 22313-1450
www.uspto.gov

DAVID K. LUCENTE; SEAGATE TECHNOLOGY LLC
INTELLECTUAL PROPERTY DEPT. - COL2LGL
389 DISC DRIVE
LONGMONT, CO 80503

Mail Date: 05/18/2010

Applicant : Bruce A. Liikanen
Patent Number : 7653847
Issue Date : 01/26/2010
Application No : 11/583,767
Filed : 10/19/2006

: NOTICE CONCERNING IMPROPER
: CALCULATION OF PATENT TERM
: ADJUSTMENT BASED UPON USPTO
: IMPROPERLY MEASURING REDUCTION
: PERIOD UNDER 37 CFR 1.704(c)(10).

The United States Patent and Trademark Office (USPTO) discovered that in processing the recent recalculation decisions mailed in response to patentee's filed Request for Recalculation of Patent Term Adjustment in view of Wyeth, the USPTO improperly measured the reduction period for reductions under 37 CFR 1.704(c)(10). Pursuant to 37 CFR 1.704(c)(10), patentee's reduction begins on the date of filing the amendment under 37 CFR 1.312 ("1.312 amendment") or other related paper and ends on the date that the Office mails a response to the filing of the 1.312 amendment or other paper. It has been discovered that during the recalculation, the calculation failed to the limit the reduction to the mail date of the response to the 1.312 amendment or other paper. Accordingly, patentee's reductions were greater than warranted.

This notice **VACATES** the previous GRANTED request for recalculation and provides patentee with a revised GRANTED recalculation.

The patent term adjustment has been determined to be **594** days. The USPTO will *sua sponte* issue a certificate of correction reflecting the amount of patent term adjustment (PTA) days determined by the recalculation.

Prior to the issuance of the certificate of correction, the USPTO will afford patentee an opportunity to be heard and request reconsideration. Accordingly, patentee has **one month or thirty (30) days** from the mail date of this notice, whichever is longer, to file a request for reconsideration of this PTA calculation. See 35 U.S.C. § 154(b)(3)(B)(ii) and 37 CFR 1.322(a)(4).

Patentee should use document code PET.OP if electronically filing a request for reconsideration of this PTA calculation. The patentee must also include the information required by 37 CFR 1.705(b)(2), and the fee required by 37 CFR 1.18(e). If patentee does not file a timely request for reconsideration of this PTA calculation, including the information required by 37 CFR 1.705(b)(2) and the fee required by 37 CFR 1.18(e), the USPTO will issue a certificate of correction reflecting the PTA determination noted above.

Patentee should be aware that in order to preserve the right of review of the USPTO's PTA determination in the United States District Court for the District of Columbia, patentee must ensure that the steps required under 35 U.S.C. § 154 (b)(4) are taken in a timely manner. Nothing in the request for recalculation should be construed as providing an alternative time frame for commencing a civil action under 35 U.S.C. § 154(b)(4).

UNITED STATES PATENT AND TRADEMARK OFFICE

Commissioner for Patents
United States Patent and Trademark Office
P.O. Box 1450
Alexandria, VA 22313-1450
www.uspto.gov

MAILED

MAR 23 2010

OFFICE OF PETITIONS

THE NATH LAW GROUP
112 SOUTH WEST STREET
ALEXANDRIA VA 22314

In re Application of	:	
Bryan James BEQUETTE	:	
Application No. 11/583,769	:	DECISION ON PETITION
Filed: October 20, 2006	:	TO WITHDRAW
Attorney Docket No. 31182-15	:	FROM RECORD
	:	

This is a decision on the Request to Withdraw as attorney or agent under 37 C.F.R. § 1.36(b) filed January 12, 2010.

The request is **NOT APPROVED**.

The Office will no longer approve requests from practitioners to withdraw from applications where the requesting practitioner is acting, or has acted, in a representative capacity pursuant to 37 CFR 1.34. In these situations, the practitioner is responsible for the correspondence the practitioner files in the application while acting in a representative capacity. As such, there is no need for the practitioner to obtain the Office's permission to withdraw from representation. However, practitioners acting in a representative capacity, like practitioners who have a power of attorney in the application, remain responsible for noncompliance with 37 CFR 1.56, as well as 37 CFR 10.18, with respect to documents they file.

A review of the file record indicates that Joshua B. Goldberg does not have power of attorney in this patent application. See 37 C.F.R. § 10.40. Accordingly, the request to withdraw under 37 C.F.R. § 1.36(b) is not applicable.

All future communications from the Office will continue to be directed to the above-identified address until otherwise properly notified by the applicant.

Telephone inquires concerning this decision should be directed to the undersigned at 571-272-6735.

/Diane Goodwyn/
Diane Goodwyn
Petitions Examiner
Office of Petitions

UNITED STATES PATENT AND TRADEMARK OFFICE

Commissioner for Patents
United States Patent and Trademark Office
P.O. Box 1450
Alexandria, VA 22313-1450
www.uspto.gov

PATTON BOGGS, LLP
8484 WESTPARK DR.
9TH FLOOR
MCLEAN VA 22102

COPY MAILED

JAN 29 2009

OFFICE OF PETITIONS

In re Application of	:	
Leitner-Wise et al.	:	
Application No. 11/583784	:	
Filing or 371(c) Date: 10/20/2006	:	ON PETITION
Title of Invention:	:	
FIREARM BOLT ASSEMBLY WITH	:	
FULLY-SUPPORTED BOLT FACE	:	

This is a decision on the "Petition Under 37 C.F.R. 1.183 and 1.36(a), and MPEP 402.10 Concerning Power of Attorney from Joint Inventor," filed December 9, 2008, to allow one of three inventors of the above-identified application to appoint a power of attorney in the above-identified application.

Background

The application was filed on October 20, 2006, without an executed oath/declaration or Power of Attorney. The Office mailed a Notice to File Missing Parts of Nonprovisional Application (Notice), on November 7, 2006, requiring, *inter alia*, a fully executed oath/declaration. In response to the Notice, Applicant filed an oath/declaration on March 28, 3007, executed by three inventors: Paul Leitner-Wise; Robert Bernard Iredale Clark and Jesse S. Gomez. The oath/declaration appointed to prosecute the application attorneys Mark R. Shanks, Toni-Junell Herbert, Chris Aniedobe and Yukiko Maskawa of Reed Smith, LLP, with Customer Number 32256 and a mailing address of

3110 Fairview Park Drive
Suite 1400
Falls Church, VA 22042

The Office thereafter mailed correspondence to

3110 Fairview Park Drive
Suite 1400
Falls Church, VA 22042

However, the address associated with Customer Number 32256 was, and remains

PATTON BOGGS, LLP
8484 WESTPARK DR.
9TH FLOOR
MCLEAN VA 22102

It is noted that attorneys Mark R. Shanks and Toni-Junell Herbert are listed as attorneys for customer number 32256 at

PATTON BOGGS, LLP
8484 WESTPARK DR.
9TH FLOOR
MCLEAN VA 22102

Applicable Law, Rules and MPEP

The applicable rule, 37 CFR 1.33, Correspondence respecting patent applications, reexamination proceedings, and other proceedings, provides:

> (a) Correspondence address and daytime telephone number . When filing an application, a correspondence address must be set forth in either an application data sheet (§ 1.76), or elsewhere, in a clearly identifiable manner, in any paper submitted with an application filing. If no correspondence address is specified, the Office may treat the mailing address of the first named inventor (if provided, see §§ 1.76(b)(1) and 1.63(c)(2)) as the correspondence address. The Office will direct all notices, official letters, and other communications relating to the application to the correspondence address. The Office will not engage in double correspondence with an applicant and a patent practitioner, or with more than one patent practitioner except as deemed necessary by the Director. If more than one correspondence address is specified in a single document, the Office will select one of the specified addresses for use as the correspondence address and, if given, will select the address associated with a Customer Number over a typed correspondence address. For the party to whom correspondence is to be addressed, a daytime telephone number should be supplied in a clearly identifiable manner and may be changed by any party who may change the correspondence address. The correspondence address may be changed as follows:
> (1) Prior to filing of § 1.63 oath or declaration by any of the inventors . If a § 1.63 oath or declaration has not been filed by any of the inventors, the correspondence address may be changed by the party who filed the application. If the application was filed by a patent practitioner, any other patent practitioner named in the transmittal papers may also change the correspondence address.
> Thus, the inventor(s), any patent practitioner named in the transmittal papers accompanying the original application, or a party that will be the assignee who filed the application, may change the correspondence address in that application under this paragraph.
> (2) Where a § 1.63 oath or declaration has been filed by any of the inventors. If a § 1.63 oath or declaration has been filed, or is filed concurrent with the filing of an application, by any of the inventors, the correspondence address may be changed by the parties set forth in paragraph (b) of this section, except for paragraph (b)(2).
> (b) Amendments and other papers . Amendments and other papers, except for written assertions pursuant to § 1.27(c)(2)(ii) of this part, filed in the application must be signed by:
> (1) A patent practitioner of record appointed in compliance with § 1.32(b);
> (2) A patent practitioner not of record who acts in a representative capacity under the provisions of § 1.34;
> (3) An assignee as provided for under § 3.71(b) of this chapter; or
> (4) All of the applicants (§1.41(b)) for patent, unless there is an assignee of the entire interest and such assignee has taken action in the application in accordance with § 3.71 of this chapter.

Regarding 37 CFR 1.33(b)(2), which allows for change of the correspondence address by an assignee provided for under 37 CFR 3.71(b), that section states:

> 37 CFR 3.71(b), Patents — assignee(s) who can prosecute,

The assignee(s) who may conduct either the prosecution of a national application for patent or a reexamination proceeding are:

(1) A single assignee. An assignee of the entire right, title and interest in the application or patent being reexamined who is of record, or
(2) Partial assignee(s) together or with inventor(s) . All partial assignees, or all partial assignees and inventors who have not assigned their right, title and interest in the application or patent being reexamined, who together own the entire right, title and interest in the application or patent being reexamined. A partial assignee is any assignee of record having less than the entire right, title and interest in the application or patent being reexamined.

Power of Attorney and Correspondence Address Change filed October 10, 2008

Office records reveal, and Petitioner herein notes, that a Power of Attorney, a Change of Correspondence Address and a Statement Under 37 CFR 3.71(b), executed by Darren Mellors, were filed on October 10, 2008. The Power of Attorney identifies Darren Mellors as the Vice President of LWRC International. The Statement Under 37 CFR 3.71(b) states that LWRC International, LLC is the assignee of the entire right, title and interest of the present application. In support of this assertion, the Statement Under 37 CFR 3.71(b) avers that an assignment from the inventors is recorded a Reel 020919; Frame 0366.

Office Assignment Records

A review of the Assignment recorded for this application reveals that the assignment is from Leitner-Wise Rifle Company, Inc., to Land Warfare Resources Corporation ("LWRC").

There is no assignment from inventors: Paul Leitner-Wise, Robert Bernard Iredale Clark or Jesse S. Gomez on file with this Office.

The present petition

Petitioner herein, inventor Robert Bernard Iredale Clark, files the present petition to appoint a power of attorney to the attorneys associated with Customer Number 32137. Petitioner asserts that the interests of Petitioner and LWRC relating to the subject matter of the present application are adverse. The petition is properly treated as a request for waiver of 37 CFR 1.32(b)(4), to allow inventor Robert Bernard Iredale Clark to independently protect his interest in the prosecution of the application.

Analyses/conclusions

1. Correspondence address

The oath/declaration appointed to prosecute the application attorneys Mark R. Shanks, Toni-Junell Herbert, Chris Aniedobe and Yukiko Maskawa of Reed Smith, LLP, with Customer Number 32256 and a mailing address of

3110 Fairview Park Drive
Suite 1400
Falls Church, VA 22042

However, the address associated with Customer Number 32256 was, and remains

PATTON BOGGS, LLP
8484 WESTPARK DR.

9TH FLOOR
MCLEAN VA 22102

As provided in 37 CFR 1.33(a), If more than one correspondence address is specified in a single document, the Office will select one of the specified addresses for use as the correspondence address and, if given, will select the address associated with a Customer Number over a typed correspondence address. Accordingly, the correspondence address for the present application has been corrected in Office records to that of

PATTON BOGGS, LLP
8484 WESTPARK DR.
9TH FLOOR
MCLEAN VA 22102

2. Power of Attorney and Change of Correspondence Address

The Power of Attorney and Change of Correspondence Address filed October 10, 2008 are insufficient to effect a proper appointment of Power of Attorney or to effect a Change of Correspondence Address. The Power of Attorney and Change of Correspondence Address are executed by Darren Mellors, Vice President of LWRC International; however, Office Assignment Records fail to indicate that any of the inventors have assigned their interest in the present application to anyone, including LWRC.

2a. Regarding the Power of Attorney, the MPEP 402.10, states:

> Papers revoking a power of attorney in an application (or giving a power of attorney) will not be accepted by the Office when signed by less than all of the applicants or owners of the application unless they are accompanied by a petition under 37 CFR 1.36(a) and fee under 37 CFR 1.17(f) with a showing of sufficient cause (if revocation), or a petition under 37 CFR 1.183 and fee under 37 CFR 1.17(f) (if appointment) demonstrating the extraordinary situation where justice requires waiver of the requirement of 37 CFR 1.32(b)(4) that the applicant, or the assignee of the entire interest of the applicant sign the power of attorney.

Here, the Power of attorney filed October 10, 2008 was not accompanied by a petition under 37 CFR 1.183 and fee, requesting waiver of 37 CFR 1.32(b)(4). As such, the Power of Attorney may not be accepted.

2b. Regarding the Change of Correspondence Address, the applicable rule, 37 CFR 1.33 provides:

> The correspondence address may be changed as follows:
>
> (a)(2) Where a § 1.63 oath or declaration has been filed by any of the inventors. If a § 1.63 oath or declaration has been filed, or is filed concurrent with the filing of an application, by any of the inventors, the correspondence address may be changed by the parties set forth in paragraph (b) of this section, except for paragraph (b)(2).
> (b) Amendments and other papers . Amendments and other papers, except for written assertions pursuant to § 1.27(c)(2)(ii) of this part, filed in the application must be signed by:
> (1) A patent practitioner of record appointed in compliance with § 1.32(b);
> (2) A patent practitioner not of record who acts in a representative capacity under the provisions of § 1.34;
>
> (3) An assignee as provided for under § 3.71(b) of this chapter; or

> (4) All of the applicants (§1.41(b)) for patent, unless there is an assignee of the entire interest and such assignee has taken action in the application in accordance with § 3.71 of this chapter.

As to 37 CFR 1.33(b)(2), which allows for change of the correspondence address by an assignee provided for under 37 CFR 3.71(b), that section states:

> 37 CFR 3.71(b), Patents — assignee(s) who can prosecute,
>
> The assignee(s) who may conduct either the prosecution of a national application for patent or a reexamination proceeding are:
>
> (1) A single assignee. An assignee of the entire right, title and interest in the application or patent being reexamined who is of record, or
> (2) Partial assignee(s) together or with inventor(s), All partial assignees, or all partial assignees and inventors who have not assigned their right, title and interest in the application or patent being reexamined, who together own the entire right, title and interest in the application or patent being reexamined. A partial assignee is any assignee of record having less than the entire right, title and interest in the application or patent being reexamined.

In this instance, there is no evidence that LWRC is (b)(1) a patent practitioner of record; (b)(3) an assignee as provided for in 37 CFR 3.71(b), or (b)(4) all of the applicants.

While the Statement Under 37 CFR 3.71(b) asserts that LWRC International, LLC is the assignee of the entire right, title and interest of the present application, the assertion is unsupported by Office records.

As such, the Change of Correspondence is unacceptable.

3. The present petition

The Manual of Patent Examining Procedure ("MPEP") § 402.10, Appointment/Revocation by Less Than All Applicants or Owners, provides

> Papers giving or revoking a power of attorney in an application generally require signature by all the applicants or owners of the application. Papers revoking a power of attorney in an application (or giving a power of attorney) will not be accepted by the Office when signed by less than all of the applicants or owners of the application unless they are accompanied by a petition under 37 CFR 1.36(a) and fee under 37 CFR 1.17(f) with a showing of sufficient cause (if revocation), or a petition under 37 CFR 1.183 and fee under 37 CFR 1.17(f) (if appointment) demonstrating the extraordinary situation where justice requires waiver of the requirement of 37 CFR 1.32(b)(4) that the applicant, or the assignee of the entire interest of the applicant sign the power of attorney. The petition should be directed to the Office of Petitions. The acceptance of such papers by petition under 37 CFR 1.36(a) or 1.183 will result in more than one attorney, agent, applicant, or owner prosecuting the application at the same time. Therefore, each of these parties must sign all subsequent replies submitted to the Office. See In re Goldstein, 16 USPQ2d 1963 (Dep. Assist. Comm'r Pat. 1988). In an application filed under 37 CFR 1.47(a), an assignee of the entire interest of the available inventors (i.e., the applicant) who have signed the declaration may appoint or revoke a power of attorney without a petition under 37 CFR 1.36(a) or 1.183. See MPEP § 402.07. However, in applications accepted under 37 CFR 1.47, such a petition under 37 CFR 1.36(a) or 1.183 submitted by a previously nonsigning inventor who has now joined in the application will not be granted. See MPEP § 409.03(i). Upon accepting papers appointing and/or

revoking a power of attorney that are signed by less than all of the applicants or owners, the Office will indicate to applicants who must sign subsequent replies. Dual correspondence will still not be permitted. Accordingly, when the acceptance of such papers results in an attorney or agent and at least one applicant or owner prosecuting the application, correspondence will be mailed to the attorney or agent. When the acceptance of such papers results in more than one attorney or agent prosecuting the application, the correspondence address will continue to be that of the attorney or agent first named in the application, unless all parties agree to a different correspondence address. Each attorney or agent signing subsequent papers must indicate whom he or she represents. The following are examples of who must sign replies when there is more than one person responsible for prosecuting the application:

(A) If coinventor A has given a power of attorney to a patent practitioner and coinventor B has not, replies must be signed by the patent practitioner of A and by coinventor B.

(B) If coinventors A and B have each appointed their own patent practitioner, replies must be signed by both patent practitioners.

In view of the foregoing, **the petition** requesting waiver of 37 CFR 1.32(b)(4), to allow inventor Robert Bernard Iredale Clark to appoint a power of attorney to the attorneys associated with Customer Number 32137, **is granted**.

The Office will continue to conduct correspondence with the attorneys first named in the application, at the correspondence address of record noted above, who will also be responsible for coordinating replies or submissions to this Office. *See*, Manual of Patent Examining Procedure ("MPEP") 402.10.

It is noted that, notwithstanding this Decision, the inventors may still jointly appoint or revoke power of attorney.

A courtesy copy of this decision is being mailed to the address noted on the Change of Correspondence Address filed October 18, 2008. However, until otherwise instructed, all future correspondence regarding this application will be mailed solely to the address of record.

This application is being returned to Technology Center Art Unit 3641 for continued examination in the normal course of business.

Telephone inquiries concerning this decision should be directed to the undersigned at (571) 272-3232.

/Derek L. Woods/
Derek L. Woods
Attorney
Office of Petitions

CC: COWEN, LIEBOWITZ & LATMAN, P.C.
1133 AVENUE OF THE AMERICAS
NEW YORK, NY 10036

WAYNE THOMPSON
5590 CRESTWICK WAY
CUMMING, GA 30040

UNITED STATES PATENT AND TRADEMARK OFFICE

Commissioner for Patents
United States Patent and Trademark Office
P.O. Box 1450
Alexandria, VA 22313-1450
www.uspto.gov

ANTONELLI TERRY STOUT & KRAUS, LLP
1300 NORTH SEVENTEENTH STREET
SUITE 1800
ARLINGTON, VA 22209-3873

MAILED

MAY 10 2010

OFFICE OF PETITIONS

In re Application of
Motoyuki Suzuki et al
Application No. 11/583,887
Filed: October 20, 2006
Attorney Docket No. 520.46726X00

ON PETITION

This is a decision on the petition, filed May 6, 2010 under 37 CFR 1.313(c)(2) to withdraw the above-identified application from issue after payment of the issue fee.

The petition is **GRANTED**.

The above-identified application is withdrawn from issue for consideration of a submission under 37 CFR 1.114 (request for continued examination). See 37 CFR 1.313(c)(2).

Petitioner is advised that the issue fee paid on April 14, 2010 in the above-identified application cannot be refunded. If, however, the above-identified application is again allowed, petitioner may request that it be applied towards the issue fee required by the new Notice of Allowance.[1]

Telephone inquiries should be directed to Irvin Dingle at (571) 272-3210.

This matter is being referred to Technology Center AU 2627 for processing of the request for continued examination under 37 CFR 1.114 and for consideration of the concurrently filed Information Disclosure Statement.

/Irvin Dingle/
Irvin Dingle
Petitions Examiner
Office of Petitions

---

[1] The request to apply the issue fee to the new Notice may be satisfied by completing and returning the new Issue Fee Transmittal Form PTOL-85(b), which includes the following language thereon: Commissioner for Patents is requested to apply the Issue Fee and Publication Fee (if any) or re-apply any previously paid issue fee to the application identified above. Petitioner is advised that, whether a fee is indicated as being due or not, the Issue Fee Transmittal Form **must** be completed and timely submitted to avoid abandonment. Note the language in bold text on the first page of the Notice of Allowance and Fee(s) Due (PTOL-85).

UNITED STATES PATENT AND TRADEMARK OFFICE

UNITED STATES DEPARTMENT OF COMMERCE
United States Patent and Trademark Office
Address: COMMISSIONER FOR PATENTS
P.O. Box 1450
Alexandria, Virginia 22313-1450
www.uspto.gov

DICKSTEIN SHAPIRO LLP
1825 EYE STREET NW
Washington, DC 20006-5403

Mail Date: 08/04/2010

Applicant	: Shigeru Irisawa	: DECISION ON REQUEST FOR
Patent Number	: 7643750	: RECALCULATION of PATENT
Issue Date	: 01/05/2010	: TERM ADJUSTMENT IN VIEW
Application No	: 11/583,904	: OF WYETH AND NOTICE OF INTENT TO
Filed	: 10/20/2006	: ISSUE CERTIFICATE OF CORRECTION
		:

The Request for Recalculation is **GRANTED** to the extent indicated.

The patent term adjustment has been determined to be **434** days. The USPTO will *sua sponte* issue a certificate of correction reflecting the amount of PTA days determined by the recalculation.

Prior to the issuance of the certificate of correction, the USPTO will afford patentee an opportunity to be heard and request reconsideration. Accordingly, patentee has **one month or thirty (30) days**, whichever is longer, to file a request for reconsideration of this patent term adjustment calculation. See 35 U.S.C. 154(b)(3)(B)(ii) and 37 CFR 1.322(a)(4). No extensions of time will be granted under 37 CFR 1.136.

Patentee should use document code PET.OP if electronically filing a request for reconsideration of this patent term adjustment calculation. The patentee must also include the information required by 37 CFR 1.705(b)(2) and the fee required by 37 CFR 1.18(e). If patentee does not file a timely request for reconsideration of this patent term adjustment calculation including the information required by 37 CFR 1.705(b)(2) and the fee required by 37 CFR 1.18(e), the USPTO will issue a certificate of correction reflecting the PTA determination noted above.

Patentee should be aware that in order to preserve the right to review in the United States District Court for the District of Columbia of the USPTO patent term adjustment determination, patentee must ensure that he or she also take the steps required under 35 U.S.C. 154(b)(4)(A) in a timely manner. Nothing in the request for recalculation should be construed as providing an alternative time frame for commencing a civil action under 35 U.S.C. 154(b)(4)(A).

Any questions concerning this decision should be directed to the Office of Patent Legal Administration at 571-272-7702.

UNITED STATES PATENT AND TRADEMARK OFFICE

UNITED STATES DEPARTMENT OF COMMERCE
United States Patent and Trademark Office
Address: COMMISSIONER FOR PATENTS
P.O. Box 1450
Alexandria, Virginia 22313-1450
www.uspto.gov

WPAT, PC
INTELLECTUAL PROPERTY ATTORNEYS
2030 MAIN STREET, SUITE 1300
IRVINE, CA 92614

Mail Date: 04/21/2010

Applicant	: Hsiang-Ming Huang	: DECISION ON REQUEST FOR
Patent Number	: 7642639	: RECALCULATION of PATENT
Issue Date	: 01/05/2010	: TERM ADJUSTMENT IN VIEW
Appliction No	: 11/583,951	: OF WYETH AND NOTICE OF INTENT TO
Filed	: 10/20/2006	: ISSUE CERTIFICATE OF CORRECTION
		:

The Request for Recalculation is **GRANTED** to the extent indicated.

The patent term adjustment has been determined to be **477** days. The USPTO will *sua sponte* issue a certificate of correction reflecting the amount of PTA days determined by the recalculation.

Prior to the issuance of the certificate of correction, the USPTO will afford patentee an opportunity to be heard and request reconsideration. Accordingly, patentee has **one month or thirty (30) days**, whichever is longer, to file a request for reconsideration of this patent term adjustment calculation. See 35 U.S.C. 154(b)(3)(B)(ii) and 37 CFR 1.322(a)(4). No extensions of time will be granted under 37 CFR 1.136.

Patentee should use document code PET.OP if electronically filing a request for reconsideration of this patent term adjustment calculation. The patentee must also include the information required by 37 CFR 1.705(b)(2) and the fee required by 37 CFR 1.18(e). If patentee does not file a timely request for reconsideration of this patent term adjustment calculation including the information required by 37 CFR 1.705(b)(2) and the fee required by 37 CFR 1.18(e), the USPTO will issue a certificate of correction reflecting the PTA determination noted above.

Patentee should be aware that in order to preserve the right to review in the United States District Court for the District of Columbia of the USPTO patent term adjustment determination, patentee must ensure that he or she also take the steps required under 35 U.S.C. 154(b)(4)(A) in a timely manner. Nothing in the request for recalculation should be construed as providing an alternative time frame for commencing a civil action under 35 U.S.C. 154(b)(4)(A).

Any questions concerning this decision should be directed to the Office of Patent Legal Administration at 571-272-7702.

UNITED STATES PATENT AND TRADEMARK OFFICE

Commissioner for Patents
United States Patent and Trademark Office
P.O. Box 1450
Alexandria, VA 22313-1450
www.uspto.gov

COPY MAILED

JUL 16 2009

OFFICE OF PETITIONS

Harman – Brinks Hofer Chicago
Brinks Hofer Gilson & Lione
P.O. Box 10395
Chicago, IL 60610

In re Application of	:	
Johann Kaderavek	:	
Application No. 11/583,992	:	DECISION ON PETITION
Filed: October 19, 2006	:	TO WITHDRAW
Attorney Docket No. 11336-1488 (P06038US)	:	FROM RECORD
	:	

This is a decision on the Request to Withdraw as attorney or agent of record under 37 C.F.R. § 1.36(b), filed June 15, 2009.

The request is **moot because a revocation of power of attorney has been filed**.

A review of the file record indicates that the power of attorney to John F. Nethery and all attorneys/agents associated with customer number 81166 has been revoked by the assignee of the patent application on July 6, 2009. Accordingly, the request to withdraw under 37 C.F.R. § 1.36(b) is moot.

All future communications from the Office will continue to be directed to the below-listed address until otherwise notified by applicant.

Telephone inquires concerning this decision should be directed to Kimberly Inabinet at 571-272-4618.

Kimberly Inabinet
Petitions Examiner
Office of Petitions

cc: The Eclipse Group LLP
10605 Balboa Boulevard, Suite 300
Granada Hills, CA 91344

UNITED STATES PATENT AND TRADEMARK OFFICE

UNITED STATES DEPARTMENT OF COMMERCE
United States Patent and Trademark Office
Address: COMMISSIONER FOR PATENTS
P.O. Box 1450
Alexandria, Virginia 22313-1450
www.uspto.gov

WARE FRESSOLA VAN DER SLUYS & ADOLPHSON, LLP
BRADFORD GREEN, BUILDING 5
755 MAIN STREET, P O BOX 224
MONROE, CT 06468

Mail Date: 07/06/2010

Applicant	: Pasi Ojala	: DECISION ON REQUEST FOR
Patent Number	: 7647229	: RECALCULATION of PATENT
Issue Date	: 01/12/2010	: TERM ADJUSTMENT IN VIEW
Application No	: 11/584,011	: OF WYETH AND NOTICE OF INTENT TO
Filed	: 10/18/2006	: ISSUE CERTIFICATE OF CORRECTION
		:

The Request for Recalculation is **GRANTED** to the extent indicated.

The patent term adjustment has been determined to be **756** days. The USPTO will *sua sponte* issue a certificate of correction reflecting the amount of PTA days determined by the recalculation.

Prior to the issuance of the certificate of correction, the USPTO will afford patentee an opportunity to be heard and request reconsideration. Accordingly, patentee has **one month or thirty (30) days**, whichever is longer, to file a request for reconsideration of this patent term adjustment calculation. See 35 U.S.C. 154(b)(3)(B)(ii) and 37 CFR 1.322(a)(4). No extensions of time will be granted under 37 CFR 1.136.

Patentee should use document code PET.OP if electronically filing a request for reconsideration of this patent term adjustment calculation. The patentee must also include the information required by 37 CFR 1.705(b)(2) and the fee required by 37 CFR 1.18(e). If patentee does not file a timely request for reconsideration of this patent term adjustment calculation including the information required by 37 CFR 1.705(b)(2) and the fee required by 37 CFR 1.18(e), the USPTO will issue a certificate of correction reflecting the PTA determination noted above.

Patentee should be aware that in order to preserve the right to review in the United States District Court for the District of Columbia of the USPTO patent term adjustment determination, patentee must ensure that he or she also take the steps required under 35 U.S.C. 154(b)(4)(A) in a timely manner. Nothing in the request for recalculation should be construed as providing an alternative time frame for commencing a civil action under 35 U.S.C. 154(b)(4)(A).

Any questions concerning this decision should be directed to the Office of Patent Legal Administration at 571-272-7702.

UNITED STATES PATENT AND TRADEMARK OFFICE

UNITED STATES DEPARTMENT OF COMMERCE
United States Patent and Trademark Office
Address: COMMISSIONER FOR PATENTS
P.O. Box 1450
Alexandria, Virginia 22313-1450
www.uspto.gov

APPLICATION NO.	FILING DATE	FIRST NAMED INVENTOR	ATTORNEY DOCKET NO.	CONFIRMATION NO.
11/584,032	10/20/2006	Zoran Mihajlovic		5473

85650 7590 07/23/2009
Zoran Mihajlovic
Vukasoviceva 23, stan 4
11090 Beograd, Serbia
Beograd, 11090
REPUBLIC OF SERBIA

EXAMINER
CHANG, AUDREY Y

ART UNIT	PAPER NUMBER
2872	

MAIL DATE	DELIVERY MODE
07/23/2009	PAPER

Please find below and/or attached an Office communication concerning this application or proceeding.

The time period for reply, if any, is set in the attached communication.

UNITED STATES PATENT AND TRADEMARK OFFICE

Commissioner for Patents
United States Patent and Trademark Office
P.O. Box 1450
Alexandria, VA 22313-1450
www.uspto.gov

Vukasoviceva 23, stan 4
11090 Beograd, Serbia
Beograd 11090 RS
REPUBLIC OF SERBIA

In re Application of
Zoran MIHAJLOVIC
Application No.: 11/584,032
Filed: 23 October 2006
For: THREE-DIMENSIONAL AUTOSTEREOSCOPIC DISPLAY AND METHOD FOR REDUCING CROSSTALK IN THREE-DIMENSIONAL DISPLAYS AND IN OTHER SIMILAR ELECTRO-OPTICAL DEVICES

: DECISION ON PETITIONS
: REQUESTING SUSPENSION OF
: ACTION BY THE OFFICE
: UNDER 37 CFR § 1.103 & UNDER 37
: CFR § 1.181

This is a decision on

A. The Petition filed 14 April 2009, requesting suspension of action in the application.
B. The Paper received on 17 April 2009, titled Supplement to the Petition to Suspend.
C. The Petition filed 19 April 2009, requesting entry of After Final Amendment the Declaration (Affidavit) and Exhibits (Evidence) received 30 March 2009, and requesting Withdrawal of Finality of the Office Action mailed 31 December 2008 and withdrawal of all later filed Advisory Actions that maintained the Finality and denied entry of After Final amendment.
D. The Paper received on 30 April 2009, titled Supplement to Petition to the Director to Review Refusal and Finality.

These petitions and supplements are being treated together as a petition under 37 CFR 1.181, requesting suspension, withdrawal of finality, and entry of all after final amendments and evidence. The petition is before the Director of Technology Center 2800 for decision. No petition fee is required.

The Petition is DENIED.

Initially, Petitioner asserts that there is good cause for suspending action as long as possible in the instant application so that a decision on the subsequent filed petitions may be decided, that the final rejection is based on circular logic, was premature, and that the non-entry of after final amendments and evidence denies Petitioner due process.

Brief History

This application is being prosecuted *pro se*.

Prosecution of the instant application was closed in a Final Office Action that was mailed on 31 December 2008. Pending claims 1and 2 were finally rejected as unpatentable under 35 USC 112, first paragraph, under 35 USC 112, second paragraph, and under 35 USC 103(a).

On 2 March 2009, a first After Final Amendment was filed with a proposed amendment to claims 1 and 2, to the specification and to the drawings. Also submitted are arguments and an affidavit by the inventor.

A first Advisory Office Action was mailed on 12 March 2009. Applicant was advised that entry of the first After Final Amendment was denied because the proposed amendments to the claims presented new features that raised new issues that required further consideration and/or search. Applicant was also notified that the first After Final Amendment presented claims in improper format because the claims did not contain markings in compliance with the requirements of 37 CFR 1.121. The examiner indicated that applicant's arguments were drawn mainly to the claims that entry was denied and that the arguments were not deemed persuasive to overcome the final rejections.

A Request to Withdraw the Finality of the Office action of 31 December 2008 and a Supplemented Request to Withdraw Finality was both received on 23 March 2009.

A second After Final Amendment was received on 30 March 2009 with a proposed amendment to claims 1 and 2, to the specification and to the drawings. Also submitted are arguments and an affidavit by the inventor.

Notice of Appeal was filed on March 31, 2009.

A second Advisory Action was mailed on 07 April 2009, indicating that entry of the second After Final Amendment was denied and addressing both the Request to Withdraw Finality and the second After Final Amendment.

A Request for Reconsideration was filed on 13 April 2009.

The instant petition to Suspend Action was filed on 14 April 2009 and supplemented on 17 April 2009.

The instant petition requesting review of the examiner's actions was filed on 19 April 2009 and supplemented on 30 April 2009.

A Supplement to Request for Reconsideration of 13 April 2009 was filed on 16 July 2009.

Applicable Rules

37 CFR 1.17

(g) For filing a petition under one of the following sections which refers to this paragraph: $200.00

37 CFR 1.75. Claims, states in pertinent part:

.....

(c) One or more claims may be presented in dependent form, referring back to and further limiting another claim or claims in the same application ... Claims in dependent form shall be construed to include all the limitations of the claim incorporated by reference into the dependent claim.

37 CFR 1.103(a) states:

(a) Suspension for cause. On request of the applicant, the Office may grant a suspension of action by the Office under this paragraph for good and sufficient cause. The Office will not suspend action if a reply by applicant to an Office action is outstanding. Any petition for suspension of action under this paragraph must specify a period of suspension not exceeding six months. Any petition for suspension of action under this paragraph must also include:

(1) A showing of good and sufficient cause for suspension of action; and

(2) The fee set forth in § 1.17(g), unless such cause is the fault of the Office.

37 CFR 1.113. Final rejection or action, states in pertinent parts:

(a) On the second or any subsequent examination or consideration by the examiner the rejection or other action may be made final, whereupon applicant's, or for ex parte reexaminations filed under § 1.510, patent owner's reply is limited to appeal in the case of rejection of any claim (§ 41.31 of this title), or to amendment as specified in § 1.114 or § 1.116. Petition may be taken to the Director in the case of objections or requirements not involved in the rejection of any claim (§ 1.181). Reply to a final rejection or action must comply with § 1.114 or paragraph (c) of this section...

(b) In making such final rejection, the examiner shall repeat or state all grounds of rejection then considered applicable to the claims in the application, clearly stating the reasons in support thereof.

(c) Reply to a final rejection or action must include cancellation of, or appeal from the rejection of, each rejected claim. If any claim stands allowed, the reply to a final rejection or action must comply with any requirements or objections as to form.

37 CFR § 1.116 Amendments and affidavits or other evidence after final action and prior to appeal.

(a) An amendment after final action must comply with § 1.114 or this section.

(b) After a final rejection or other final action (§ 1.113) in an application or in an ex parte reexamination filed under § 1.510, or an action closing prosecution (§ 1.949) in an inter partes reexamination filed under § 1.913, but before or on the same date of filing an appeal (§ 41.31 or § 41.61 of this title):

(1) An amendment may be made cancelling claims or complying with any requirement of form expressly set forth in a previous Office action;
(2) An amendment presenting rejected claims in better form for consideration on appeal may be admitted; or
(3) An amendment touching the merits of the application or patent under reexamination may be admitted upon a showing of good and sufficient reasons why the amendment is necessary and was not earlier presented.
(c) The admission of, or refusal to admit, any amendment after a final rejection, a final action, an action closing prosecution, or any related proceedings will not operate to relieve the application or reexamination proceeding from its condition as subject to appeal or to save the application from abandonment under § 1.135, or the reexamination prosecution from termination under § 1.550(d) or § 1.957(b) or limitation of further prosecution under § 1.957(c).
(d)
(1) Notwithstanding the provisions of paragraph (b) of this section, no amendment other than cancelling claims, where such cancellation does not affect the scope of any other pending claim in the proceeding, can be made in an inter partes reexamination proceeding after the right of appeal notice under § 1.953 except as provided in § 1.981 or as permitted by § 41.77(b)(1) of this title.
(2) Notwithstanding the provisions of paragraph (b) of this section, an amendment made after a final rejection or other final action (§ 1.113) in an ex parte reexamination filed under §1.510, or an action closing prosecution (§ 1.949) in an inter partes reexamination filed under § 1.913 may not cancel claims where such cancellation affects the scope of any other pending claim in the reexamination proceeding except as provided in § 1.981 or as permitted by § 41.77(b)(1) of this title.
(e) An affidavit or other evidence submitted after a final rejection or other final action (§ 1.113) in an application or in an ex parte reexamination filed under § 1.510, or an action closing prosecution (§ 1.949) in an inter partes reexamination filed under § 1.913 but before or on the same date of filing an appeal (§ 41.31 or § 41.61 of this title), may be admitted upon a showing of good and sufficient reasons why the affidavit or other evidence is necessary and was not earlier presented.

37 CFR § 1.136 Extensions of time.
(a)
(1) If an applicant is required to reply within a nonstatutory or shortened statutory time period, applicant may extend the time period for reply up to the earlier of the expiration of any maximum period set by statute or five months after the time period set for reply, if a petition for an extension of time and the fee set in § 1.17(a) are filed, unless:
(i) Applicant is notified otherwise in an Office action;
(ii) The reply is a reply brief submitted pursuant to § 41.41 of this title;
(iii) The reply is a request for an oral hearing submitted pursuant to § 41.47(a) of this title;
(iv) The reply is to a decision by the Board of Patent Appeals and Interferences pursuant to § 1.304 or to § 41.50 or § 41.52 of this title; or
(v) The application is involved in a contested case (§ 41.101(a) of this title).

(2) The date on which the petition and the fee have been filed is the date for purposes of determining the period of extension and the corresponding amount of the fee. The expiration of the time period is determined by the amount of the fee paid. A reply must be filed prior to the expiration of the period of extension to avoid abandonment of the application (§ 1.135), but in no situation may an applicant reply later than the maximum time period set by statute, or be granted an extension of time under paragraph (b) of this section when the provisions of this paragraph are available. See § 1.304 for extensions of time to appeal to the U.S. Court of Appeals for the Federal Circuit or to commence a civil action; § 1.550(c) for extensions of time in ex parte reexamination proceedings, § 1.956 for extensions of time in inter partes reexamination proceedings; and §§ 41.4(a) and 41.121(a)(3) of this title for extensions of time in contested cases before the Board of Patent Appeals and Interferences.

(3) A written request may be submitted in an application that is an authorization to treat any concurrent or future reply, requiring a petition for an extension of time under this paragraph for its timely submission, as incorporating a petition for extension of time for the appropriate length of time. An authorization to charge all required fees, fees under § 1.17, or all required extension of time fees will be treated as a constructive petition for an extension of time in any concurrent or future reply requiring a petition for an extension of time under this paragraph for its timely submission. Submission of the fee set forth in § 1.17(a) will also be treated as a constructive petition for an extension of time in any concurrent reply requiring a petition for an extension of time under this paragraph for its timely submission.

....

37 CFR 1.181

(f) The mere filing of a petition will not stay any period for reply that may be running against the application, nor act as a stay of other proceedings. Any petition under this part not filed within two months of the mailing date of the action or notice from which relief is requested may be dismissed as untimely, except as otherwise provided. This two-month period is not extendable.

37 CFR 1.183 states:

In an extraordinary situation, when justice requires, any requirement of the regulations in this part which is not a requirement of the statutes may be suspended or waived by the Director or the Director's designee, *sua sponte*, or on petition of the interested party, subject to such other requirements as may be imposed. Any petition under this section must be accompanied by the petition fee set forth in § 1.17(f).

37 CFR § 41.37 (a) Appeal brief.

(1) Appellant must file a brief under this section within two months from the date of filing the notice of appeal under § 41.31.

.....

(e) The time periods set forth in this section are extendable under the provisions of § 1.136 of this title for patent applications and § 1.550(c) of this title for *ex parte* reexamination proceedings.

MPEP 706.07(a) states in pertinent part:

> .....
> Under present practice, second or any subsequent actions on the merits shall be final, except where the examiner introduces a new ground of rejection that is neither necessitated by applicant's amendment of the claims, nor based on information submitted in an information disclosure statement filed during the period set forth in 37 CFR 1.97(c) with the fee set forth in 37 CFR 1.17(p). Where information is submitted in an information disclosure statement during the period set forth in 37 CFR 1.97(c) with a fee, the examiner may use the information submitted, e.g., a printed publication or evidence of public use, and make the next Office action final whether or not the claims have been amended, provided that no other new ground of rejection which was not necessitated by amendment to the claims is introduced by the examiner. See MPEP § 609.04(b).

MPEP 709 states in part:

> Suspension of action (37 CFR 1.103) should not be confused with extension of time for reply (37 CFR 1.136). It is to be noted that a suspension of action applies to an impending Office action by the examiner whereas an extension of time for reply applies to action by the applicant. In other words, the action cannot be suspended in an application which contains an outstanding Office action or requirement awaiting reply by the applicant. It is only the action by the examiner which can be suspended under 37 CFR 1.103.
>
> A request that action in an application be delayed will be granted only under the provisions of 37 CFR 1.103, which provides for "Suspension of Action." A petition for suspension of action under 37 CFR 1.103(a) must:
> (A) be presented as a separate paper;
> (B) be accompanied by the petition fee set forth in 37 CFR 1.17(g);
> (C) request a specific and reasonable period of suspension not greater than 6 months; and
> (D) present good and sufficient reasons why the suspension is necessary.
> If the requirements of 37 CFR 1.103(a) are not met, applicants should expect that their applications, whether new or amended, will be taken up for action by the examiner in the order provided in MPEP § 708, Order of Examination.

MPEP 714.12 states in part:

> Once a final rejection that is not premature has been entered in an application, applicant or patent owner no longer has any right to unrestricted further prosecution. This does not mean that no further amendment or argument will be considered. Any amendment that will place the application either in condition for allowance or in better form for appeal may be entered. Also, amendments >filed after a final rejection, but before or on the date of filing an appeal,< complying with objections or requirements as to form are to be permitted after final action in accordance with 37 CFR 1.116(b). >Amendments filed after the date of filing an appeal may be entered if the amendment complies with 37 CFR 41.33. See MPEP § 1206.< Ordinarily, amendments filed after the final action are not entered unless approved by the examiner. See MPEP § 706.07(f), § 714.13 and § *>1206<.

MPEP 1205.01 states in pertinent parts:

> 37 CFR 41.37(a) provides 2 months from the date of the notice of appeal for the appellant to file an appeal brief and the appeal brief fee set forth in 37 CFR 41.20(b)(2). In an ex parte reexamination proceeding, the time period can be extended only under the provisions of 37 CFR 1.550(c). See also MPEP § 2274.
>
> .....
>
> 37 CFR 41.37(a) does not permit the brief to be filed within the time allowed for reply to the action from which the appeal was taken even if such time is later. Once appellant timely files a notice of appeal in compliance with 37 CFR 41.31, the time period for reply set forth in the last Office action is tolled and is no longer relevant for the time period for filing an appeal brief. For example, if appellant filed a notice of appeal within one month from the mailing of a final Office action which sets forth a 3-month shortened statutory period for reply, and then the appellant filed an appeal brief after 2 months from the filing date of the notice of appeal but within 3 months from the mailing of the final action, a petition for an extension of time for one month would be required. Similarly, if the appellant files an amendment or a request for continued examination (RCE) under 37 CFR 1.114, instead of an appeal brief, after 2 months from the filing date of the notice of appeal but within 3 months from the mailing of the final action, the petition for an extension of time would be required.
>
> This 2-month time period for a patent application may be extended under 37 CFR 1.136(a), and if 37 CFR 1.136(a) is not available, under 37 CFR 1.136(b) for extraordinary circumstances.
>
> In the event that the appellant finds that he or she is unable to file a brief within the time period allotted by the rule, he or she may file a petition, with fee, to the Technology Center (TC), requesting additional time under 37 CFR 1.136(a). Additional time in excess of 5 months will not be granted unless extraordinary circumstances are involved under 37 CFR 1.136(b). The time extended is added to the calendar day of the original period, as opposed to being added to the day it would have been due when said last day is a Saturday, Sunday, or Federal holiday.

Analysis

Regarding the Request for Suspension

The Petitioner has in response to a Final Office action filed a Notice of Appeal on 31 March 2009. The Appeal Brief is due within two months of the filing date of the Notice of Appeal, see MPEP 1205.01. Pursuant to 37 CFR 41.37(e), this time period may be extended as provided under 37 CFR 1.136. The Appeal Brief has not been received at this time.

Petitioner is correct in asserting that suspension of action in the instant application under 37 CFR 1.103(a) is not available. Currently, because an Appeal Brief by petitioner is due pursuant to 37

CFR 41.37(a)(1), suspension of action by the USPTO under 37 CFR 1.103(a) is not an appropriate avenue for seeking relief from the timely filing of an Appeal Brief.

37 CFR 1.103(a) states in part "The Office will not suspend action if a reply by applicant to an Office action is outstanding." MPEP 709 further clarifies this stating "the action cannot be suspended in an application which contains an outstanding Office action or requirement awaiting reply by the applicant." The Appeal Brief is outstanding in this application. Therefore the request for Suspension for cause is not appropriate at this time. Furthermore, a fee under 37 CFR 1.17(g) is required for filing a petition under 37 CFR 1.103. Additionally, Petitioner has stated the term desired for the suspension as "as long as possible and necessary" and "for any petitions which the Applicant will file with the USPTO". 37 CFR 1.103(a) states in part "Any petition for suspension of action under this paragraph must specify a period of suspension not exceeding six months." MPEP 709 further clarifies this stating "(C) request a specific and reasonable period of suspension not greater than 6 months". The term of the suspension requested by Petitioner does not specify a period, and does not request a specific and reasonable period as required by the rule and the MPEP respectively.

Pursuant to 37 C.F.R. § 1.103(a), the Office may grant suspension of action <u>by the Office</u> for good and sufficient cause. However, there is no impending Office action necessary since the Office is awaiting the filing of the appeal brief required from petitioner. Accordingly, 37 C.F.R. § 1.103(a) is not available to petitioner at this time. Further, to suspend an action by appellant under 37 C.F.R. § 1.103(a) would be tantamount to waiving the requirement of 37 C.F.R. § 41.37 and, in effect, improperly granting a petition for under 37 C.F.R. § 1.183, which is not within the authority of the undersigned.

Finally, the relief that a suspension would provide is moot. The petitions filed 19 April 2009 and supplemented on 30 April 2009 are being decided and discussed hereinafter.

Regarding the Request for Withdrawal of Finality and entry of After Final Submitted Amendments and Evidence

In support of the petition, it is asserted that the final rejection is based on circular logic, was prematurely made final, and good cause is present in this application to support entry of the After Final Amendment of 30 March 2009 or suspension of action until petitioner succeeds in having the After Final Amendment entered.

Regarding the argument that the examiner employs circular logic to justify making the Office action final, Petitioner states:

> ...the Examiner of this Patent Application not only wrongfully rejected it again, but also wrongfully rejected this Inventor's claim that finality is premature in this case: "... the final rejection is proper when the new ground of rejection is brought about and necessitated by the amendment to the claim, the new ground of rejection to both claims 1 and 2 of this application is necessitated by the amendment to claim 1 and inherited by claim 2 as it is dependent from claim 1. Applicant argues that the claim 2 has not been amended, however since claim 2

> depneds from claim 1 and recites "an autostereoscopic three-dimensional display as claimed in claim 1", the amendment to claim 1 certainly applies to claim 2. The finality of the rejections to claims 1 and 2 set forth in Office action dated December 31, 2008 is therefore proper." Advisory Action, April 7, 2008. However, the aforementioned claim made by the Examiner of this Patent Application that the Examiner of this Patent Application can refuse to take into consideration the evidence, which proves that new ground of rejection does not show new features or anything new relevant for patentability of this Invention added by the amendment to the Claims, since the previous action was made final based on hypothesis that dependent Claim inherits necessity of the new ground of rejection from amended Claim from which it depends, which is based on (false) claim that new ground of rejection (new added prior art) shows new features and/or something new relevant for patentability of this Invention added by the amendment to the Claims, is false, since that would constitute circular logic. Circular logic is not allowed in the U.S. judicial system.

The examiner's treatment of dependent claim 2 as an amended in the final Office action as including the subject matter of amended claim 1 is found proper and consistent with the definition of a dependent claim under 37 CFR 1.75(c). This is not circular logic. Whether the combination of the prior art references renders claims 1 and 2 unpatentable under 35 USC 103(a) in the final rejection is an issue that deals with the merits of the claims. The rejections of the claims are appealable matters that are not addressed via petitions.

Regarding the argument that the rejection was made final prematurely because the examiner raised a new prior art reference to serve as the basis for the rejection. Petitioner appears to assert that the basis for making the Office action final based on the Manual of Patent Examining Procedure such as section 706.07(a) is invalid as being unconstitutional because it violates the Fifth and Fourteenth Amendments of the U.S. Constitution. It is argued that MPEP 706.07(a) does not support the final rejection since claim 2 was not amended and this section of the MPEP permits making an Office action final where the examiner introduces a new ground of rejection that is necessitated by applicant's amendment of the claims. Petitioner appears to misunderstand the definition of a dependent claim. Claim 2 of the instant application is a dependent claim and, pursuant to 37 CFR 1.75(c), a dependent claim is construed to include all the limitations of the claim incorporated by reference into the dependent claim. Since claim 2 depends from independent claim 1, claim 2 is construed as reciting all the limitations of claim 1 and further limiting claim 1 with the subject matter recited therein. The examiner had properly construed claim 2 as including the subject matter of claim 1, as amended, when making the rejection final in the Office action of 31 December 2008. Regardless of whether claim 2 has been substantively amended on 23 October 2008, because claim 1, which claim 2 depends from, was substantively amended on 23 October 2008, it was necessary for the examiner to conduct further search and apply a new reference in the rejection of claims 1 and 2. The record clearly indicates that the amendment to the claims on 23 October 2008 necessitated a new ground of rejection of claims 1 and 2 in the Office action of 31 December 2008. Consistent with rule 37 CFR 1.113 and the procedure outlined in MPEP 706.07(a), the examiner had properly closed prosecution and made the Office action final.

Regarding the denial of entry of the amendments and evidence submitted after final rejection, a review of the application record reveals that no irregularity in the prosecution of the application on the part of the examiner and that applicant has been accorded due process under the rules and regulations. Under current application examination process as authorized in 37 CFR 1.113 and MPEP a patent application is entitled to at least ONE non-final Office action, should any claim be found not patentable. Thereafter applicant is entitled to a reply, with or without amendments. The Office will then re-examine the application and will issue another Office action. That Office action may close prosecution and be made final, in accordance with 37 CFR 1.113 and MPEP 706.07(a):

> Under present practice, second or any subsequent actions on the merits shall be final, except where the examiner introduces a new ground of rejection that is neither necessitated by applicant's amendment of the claims. (MPEP 706.07(a))

Petitioner has received a non final Office action and filed a reply thereto. The reply was entered as a matter of right. Petitioner then received an Office action that was properly made final in accordance with current patent processes and procedures. Entry of amendments after a final Office action is NOT a matter of right, but subject to condition set forth in 37 CFR 1.113 and 1.116.

There is no evidence in the file record, neither explicit nor implied, of improper action or abuse of authority on the part of the examiner in the examination of the instant application. Particularly, in the denial of entry of the amendments and evidence submitted after Final Action; see Advisory Actions mailed 12 March 2009 and 13 April 2009. Entry of such amendments is governed by 37 CFR 1.116 (b)(3). The claim amendments touch the merits as they add new limitations to the claims, thereby raising new issues. As such they were refused entry. MPEP 714.12 states that amendments filed after final action are not entered unless approved by the examiner. The examiner has stated in each of the Advisory Actions reasons why entry was denied. Accordingly the record does not demonstrate that Petitioner has been denied due process.

For all of the reasons stated above the Petition is DENIED.

In view of this decision, an appeal brief is due in accordance with 37 CFR 41.37(a).

Petitioner may request review of the instant decision by filing a petition to the Deputy Commissioner for Patent Examination Policy.

Telephone inquiries concerning this decision should be directed to Brian Sircus at 571 272 2058.

John Cabeca
Director, TC 2800
Semiconductors, Electrical and Optical
Systems and Components

UNITED STATES PATENT AND TRADEMARK OFFICE

UNITED STATES DEPARTMENT OF COMMERCE
United States Patent and Trademark Office
Address: COMMISSIONER FOR PATENTS
P.O. Box 1450
Alexandria, Virginia 22313-1450
www.uspto.gov

APPLICATION NO.	FILING DATE	FIRST NAMED INVENTOR	ATTORNEY DOCKET NO.	CONFIRMATION NO.
11/584,032	10/20/2006	Zoran Mihajlovic		5473

85650 7590 08/04/2009
Zoran Mihajlovic
Vukasoviceva 23, stan 4
11090 Beograd, Serbia
Beograd, 11090
REPUBLIC OF SERBIA

EXAMINER
CHANG, AUDREY Y

ART UNIT	PAPER NUMBER
2872	

MAIL DATE	DELIVERY MODE
08/04/2009	PAPER

Please find below and/or attached an Office communication concerning this application or proceeding.

The time period for reply, if any, is set in the attached communication.

UNITED STATES PATENT AND TRADEMARK OFFICE

Commissioner for Patents
United States Patent and Trademark Office
P.O. Box 1450
Alexandria, VA 22313-1450
www.uspto.gov

Vukasoviceva 23, stan 4
11090 Beograd, Serbia
Beograd 11090 RS
REPUBLIC OF SERBIA

In re Application of
Zoran MIHAJLOVIC
Application No.: 11/584,032
Filed: 23 October 2006
For: THREE-DIMENSIONAL AUTOSTEREOSCOPIC DISPLAY AND METHOD FOR REDUCING CROSSTALK IN THREE-DIMENSIONAL DISPLAYS AND IN OTHER SIMILAR ELECTRO-OPTICAL DEVICES

: DECISION ON PETITION
: UNDER 37 CFR 1.181

This is a decision on the letter filed 26 July 2009 and the following 3 resubmissions of the same letter on 27 July 2009. The letters have been treated a request to reconsider the TC Director's decision of 23 July 2009 denying the relief requested in the petitions filed 14 April 2009, 17 April 2009, 19 April 2009 and 30 April 2009.

The request for reconsideration of the decision mailed 23 July 2009 is granted to the extent that the decision of 23 July 2009 has been reviewed but **DENIED** as to making any change thereto.

The request for reconsideration does not raise any substantive arguments pointing out where and why the decision of 23 July 2009 is in error. Accordingly, the decision will stand unchanged.

The request for reconsideration includes a Request for Admission under Federal Rules of Civil Procedure 36. Pursuant to Fed. R. Civ. P. 1, the Federal Rules of Civil Procedure only apply in "civil actions and proceedings in the United States District Courts." Accordingly, they do not apply in the instant case, which is an administrative proceeding. It is therefore not appropriate for petitioner to invoke or apply a Request for Admission under Fed. R. Civ. P. 6.

Petitioner may wish to consider filing a petition to the Deputy Commissioner for Patent Examining Policy requesting review of the instant decision. A denial of the petition by the Office of the Deputy Commissioner for Patent Examining Policy would be a final agency decision, which may be appealed to a court of law.

For the reasons stated above the Request for Reconsideration is denied.

In view of this decision, an appeal brief is due in accordance with 37 CFR 41.37(a).

It is noted that in the letters submitted 14, 17, 19, and 30 April 2009 and the letter submitted 26 and 27 July 2009, the relief requested encompasses both substantive and procedural issues. Each type of relief must be requested separately in order to ensure compliance with the corresponding laws and regulations, 37 CFR 1.4(c). Substantive issues are appealable and not petitionable, whereas procedural issues are petitionable.

A review of the recently submitted letters reveals that petitioner is unfamiliar with patent prosecution procedure. While an inventor may prosecute their application, lack of skill in this field may act as a liability in affording the maximum protection for the invention disclosed. Accordingly, petitioner may wish to secure the services of a registered patent practitioner for assistance with prosecution of the instant application. The Office cannot aid in selecting an attorney or agent. However, a listing of registered patent attorneys and agents is available on the USPTO Internet web site http://www.uspto.gov in the Site Index under "Attorney and Agent Roster."

Telephone inquiries concerning this decision should be directed to Brian Sircus at (571) 272 - 2058.

John Cabeca
Director, Technology Center 2800
Semiconductors, Electrical and Optical
Systems and Components

UNITED STATES PATENT AND TRADEMARK OFFICE

Commissioner for Patents
United States Patent and Trademark Office
P.O. Box 1450
Alexandria, VA 22313-1450
www.uspto.gov

Zoran Mihajlovic
Vukasoviceva 23, stan 4
11090 Beograd, Serbia
Beograd 11090 RS
REPUBLIC OF SERBIA

COPY MAILED

SEP 0 2 2009

OFFICE OF PETITIONS

In re Application of	:	
Zoran MIHAJLOVIC	:	
Application No. 11/584,032	:	ON PETITION
Filed: October 20, 2006	:	
Attorney Docket No.:	:	

This is a decision on the petitions filed August 9, 2009, which was resubmitted on August 11, 2009 and supplemented on August 12, 2009, under 37 CFR 1.181(a)(3) requesting that the Director exercise his supervisory authority and overturn the decisions of the Director, Technology Center 2800 (Technology Center Director), dated July 23, 2009 and August 4, 2009, which refused to withdraw the finality of the December 31, 2008 Office action and compel the entry of the affidavit and amendment after final filed March 30, 2009 and under 37 CFR 1.183 requesting that the Director suspend the rules.

In view of the Request for Continued Examination under 37 CFR 1.114 filed August 31, 2009, the petitions to overturn the decision of the Technology Center Director and waive the rules are **DISMISSED** as moot.

This application file is being forwarded to Technology Center 2800 for further processing.

Telephone inquiries concerning this decision should be directed to David A. Bucci at (571) 272-7099.

Charles Pearson
Director
Office of Petitions

UNITED STATES PATENT AND TRADEMARK OFFICE

Commissioner for Patents
United States Patent and Trademark Office
P.O. Box 1450
Alexandria, VA 22313-1450
www.uspto.gov

PATRICK REILLY
BOX 7218
SANTA CRUZ CA 95061-7218

COPY MAILED

NOV 19 2007

OFFICE OF PETITIONS

In re Application of

Joseph SEIBER
Application No. 11/584,076
Filed: October 20, 2006
Attorney Docket No. JS-001

DECISION ON PETITION
TO MAKE SPECIAL UNDER
37 CFR 1.102(c)(1)

This is a decision on the petition under 37 CFR 1.102(c)(1), filed October 15, 2007, to make the above-identified application special based on applicant's age as set forth in M.P.E.P. § 708.02, Section IV.

The petition is **GRANTED**.

A grantable petition to make an application special under 37 CFR 1.102(c)(1) and MPEP § 708.02, Section IV: Applicant's Age must be accompanied by evidence showing that at least one of the applicants is 65 years of age, or more, such as a birth certificate or a statement by applicant. No fee is required

The instant petition includes a copy of the applicant's driver's license . Accordingly, the above-identified application has been accorded "special" status.

Telephone inquiries concerning this decision should be directed to the undersigned at 571-272-6735.

All other inquiries concerning either the examination or status of the application should be directed to the Technology Center.

This application is being forwarded to the Technology Center Art Unit 4175 for action on the merits commensurate with this decision.

Diane Goodwyn
Petitions Examiner
Office of Petitions

UNITED STATES PATENT AND TRADEMARK OFFICE

UNITED STATES DEPARTMENT OF COMMERCE
United States Patent and Trademark Office
Address: COMMISSIONER FOR PATENTS
P.O. Box 1450
Alexandria, Virginia 22313-1450
www.uspto.gov

Ballard Spahr LLP
SUITE 1000
999 PEACHTREE STREET
ATLANTA, GA 30309-3915

Mail Date: 04/21/2010

Applicant	: Bernard Kippelen	: DECISION ON REQUEST FOR
Patent Number	: 7642918	: RECALCULATION of PATENT
Issue Date	: 01/05/2010	: TERM ADJUSTMENT IN VIEW
Appliction No	: 11/584,086	: OF WYETH AND NOTICE OF INTENT TO
Filed	: 10/20/2006	: ISSUE CERTIFICATE OF CORRECTION
		:

The Request for Recalculation is **GRANTED** to the extent indicated.

The patent term adjustment has been determined to be **424** days. The USPTO will *sua sponte* issue a certificate of correction reflecting the amount of PTA days determined by the recalculation.

Prior to the issuance of the certificate of correction, the USPTO will afford patentee an opportunity to be heard and request reconsideration. Accordingly, patentee has **one month or thirty (30) days**, whichever is longer, to file a request for reconsideration of this patent term adjustment calculation. See 35 U.S.C. 154(b)(3)(B)(ii) and 37 CFR 1.322(a)(4). No extensions of time will be granted under 37 CFR 1.136.

Patentee should use document code PET.OP if electronically filing a request for reconsideration of this patent term adjustment calculation. The patentee must also include the information required by 37 CFR 1.705(b)(2) and the fee required by 37 CFR 1.18(e). If patentee does not file a timely request for reconsideration of this patent term adjustment calculation including the information required by 37 CFR 1.705(b)(2) and the fee required by 37 CFR 1.18(e), the USPTO will issue a certificate of correction reflecting the PTA determination noted above.

Patentee should be aware that in order to preserve the right to review in the United States District Court for the District of Columbia of the USPTO patent term adjustment determination, patentee must ensure that he or she also take the steps required under 35 U.S.C. 154(b)(4)(A) in a timely manner. Nothing in the request for recalculation should be construed as providing an alternative time frame for commencing a civil action under 35 U.S.C. 154(b)(4)(A).

Any questions concerning this decision should be directed to the Office of Patent Legal Administration at 571-272-7702.

UNITED STATES PATENT AND TRADEMARK OFFICE

Commissioner for Patents
United States Patent and Trademark Office
P.O. Box 1450
Alexandria, VA 22313-1450
www.uspto.gov

JAMES E. DORWEILER
149 MAY ST.
CORNELIA GA 30531

MAILED

SEP 22 2009

OFFICE OF PETITIONS

In re Application of	:	
James E. DORWEILER	:	
Application No. 12/584,112	:	DECISION ON PETITION
Filed: August 31, 2009	:	TO MAKE SPECIAL UNDER
Attorney Docket No.	:	37 CFR 1.102(c)(1)
	:	

This is a decision on the petition under 37 CFR 1.102(c)(1), filed August 31, 2009, to make the above-identified application special based on applicant's age as set forth in M.P.E.P. § 708.02, Section IV.

The petition is **GRANTED**.

A grantable petition to make an application special under 37 CFR 1.102(c)(1) and MPEP § 708.02, Section IV: Applicant's Age must be accompanied by evidence showing that at least one of the applicants is 65 years of age, or more, such as a birth certificate or a statement by applicant. No fee is required

The instant petition includes a declaration of inventor James Dorweiler, attesting to his age. Accordingly, the above-identified application will be accorded "special" status.

Telephone inquiries concerning this decision should be directed to Tredelle Jackson at 571-272-2783.

All other inquiries concerning either the examination or status of the application should be directed to the Office of Patent Application Processing.

This application is being referred to the Office of Patent Application Processing for processing.
This application will be accorded "special" status when pre-examination processing is done.

Tredelle D. Jackson
Paralegal Specialist
Office of Petitions

UNITED STATES PATENT AND TRADEMARK OFFICE

UNITED STATES DEPARTMENT OF COMMERCE
United States Patent and Trademark Office
Address: COMMISSIONER FOR PATENTS
P.O. Box 1450
Alexandria, Virginia 22313-1450
www.uspto.gov

APPLICATION NO.	FILING DATE	FIRST NAMED INVENTOR	ATTORNEY DOCKET NO.	CONFIRMATION NO.
11/584,130	10/20/2006	Feng-Huei Lin	BST06301	4649

50488 7590 01/30/2009
ALLEMAN HALL MCCOY RUSSELL & TUTTLE LLP
806 SW BROADWAY
SUITE 600
PORTLAND, OR 97205-3335

EXAMINER
HARDEE, JOHN R

ART UNIT	PAPER NUMBER
1796	

MAIL DATE	DELIVERY MODE
01/30/2009	PAPER

Please find below and/or attached an Office communication concerning this application or proceeding.

The time period for reply, if any, is set in the attached communication.

UNITED STATES PATENT and TRADEMARK OFFICE
UNDER SECRETARY OF COMMERCE FOR INTELLECTUAL PROPERTY AND
DIRECTOR OF THE UNITED STATES PATENT AND TRADEMARK OFFICE
WASHINGTON, D.C. 20231
WWW.USPTO.GOV

Mailed: 1/29/09

HP
Paper No. ___

In re application of
Feng-Huei Lin
Serial No. 11/584,130
Filed: October 20, 2006
For: A BAMBOO VINEGAR SHAMPOO FOR PETS AND MANUFACTURING PROCESS OF THE SAME

DECISION ON PETITION

This is a decision on the PETITION TO ACCEPT COLOR PHOTOGRAPHS UNDER 37 C.F.R. ∋ 1.84(b)(2), filed October 20, 2006, to permit color photographs since (1) the fee as required by 37 CFR 1.17(h) has been paid, (2) three sets of the color photographs have been filed, (3) the specification includes the language set forth in 37 CFR 1.84(a)(2)(iv), and (4) an explanation is provided stating why color photographs are necessary. The color photographs include Figures 2-5.

A review of the application record indicates that all of the requirements for acceptance of color photographs have been met.

The petition is **GRANTED**.

Harold Y. Pyon
Supervisory Patent Examiner
Technology Center 1700

ALLEMAN HALL MCCOY RUSSELL & TUTTLE, LLP
AMBER SUN
806 S.W. BROADWAY,
SUITE 600
PORTLAND, OREGON 97205

UNITED STATES PATENT AND TRADEMARK OFFICE

Commissioner for Patents
United States Patent and Trademark Office
P.O. Box 1450
Alexandria, VA 22313-1450
www.uspto.gov

H. THOMAS ANDERTON, JR.
GENENCOR INTERNATIONAL, INC.
925 PAGE MILL ROAD
PALO ALTO CA 94304-1013

COPY MAILED
JAN 04 2010

In re Application of	:	
Richard R. BOTT et al.	:	
Application No. 11/584,158	:	DECISION ON PETITION
Filed: October 20, 2006	:	
Attorney Docket No. **GC541-5-C2**	:	

This is a decision on the petition under the unintentional provisions of 37 CFR 1.137(b), filed November 16, 2009, to revive the above-identified application.

The petition is **DISMISSED**.

Any request for reconsideration of this decision must be submitted within TWO (2) MONTHS from the mail date of this decision. Extensions of time under 37 CFR 1.136(a) are permitted. The reconsideration request should include a cover letter entitled "Renewed Petition under 37 CFR 1.137(b)." This is **not** a final agency action within the meaning of 5 U.S.C. § 704.

The application became abandoned for failure to reply in a timely manner to the non-final Office action mailed, April 27, 2009, which set a shortened statutory period for reply of three (3) months. No extensions of time under the provisions of 37 CFR 1.136(a) were obtained. Accordingly, the application became abandoned on July 28, 2009.

A grantable petition under 37 CFR 1.137(b) must be accompanied by: (1) the required reply, unless previously filed; (2) the petition fee as set forth in 37 CFR 1.17(m); (3) a statement that the entire delay in filing the required reply from the due date for the reply until the filing of a grantable petition pursuant to 37 CFR 1.137(b) was unintentional; and (4) any terminal disclaimer (and fee as set forth in 37 CFR 1.20(d)) required by 37 CFR 1.137(d). Where there is a question as to whether either the abandonment or the delay in filing a petition under 37 CFR 1.137 was unintentional, the Director may require additional information. See MPEP 711.03(c)(II)(C) and (D). The instant petition lacks item(s) (3) in that statement about the delay being unintentional included with the petition is not acceptable. The unintentional delay statement by attorney Stephen Todd is silent as to the nature of delay from the date the reply was due until the filing of a grantable petition. The petitioner is urged to consider using the form PTO/SB/64 available at www.uspto.gov.

An extension of time under 37 CFR 1.136 must be filed prior to the expiration of the maximum extendable period for reply. See In re Application of S., 8 USPQ2d 1630, 1631 (Comm'r Pats. 1988). Since the $1100 extension of time fee submitted with the petition on November 16, 2009 was subsequent to the maximum extendable period for reply, this fee is unnecessary and will be credited to petitioner's deposit account.

It is not apparent whether the person signing the statement of unintentional delay was in a position to have firsthand or direct knowledge of the facts and circumstances of the delay at issue. Nevertheless, such statement is being treated as having been made as the result of a reasonable inquiry into the facts and circumstances of such delay. See 37 CFR 10.18(b) and Changes to Patent Practice and Procedure; Final Rule Notice, 62 Fed. Reg. 53131, 53178 (October 10, 1997), 1203 Off. Gaz. Pat. Office 63, 103 (October 21, 1997). In the event that such an inquiry has not been made, petitioner must make such an inquiry. If such inquiry results in the discovery that it is not correct that the entire delay in filing the required reply from the due date for the reply until the filing of a grantable petition pursuant to 37 CFR 1.137(b) was unintentional, petitioner must notify the Office.

There is no indication that the person signing the petition was ever given a power of attorney to prosecute the application. If the person signing the petition desires to receive future correspondence regarding this application, the appropriate power of attorney document must be submitted. While a courtesy copy of this decision is being mailed to the person signing the petition, all future correspondence will be directed to the address currently of record until appropriate instructions are received.

Further correspondence with respect to this matter should be addressed as follows:

By Mail: Mail Stop PETITION
Commissioner for Patents
P. O. Box 1450
Alexandria, VA 22313-1450

By hand: U. S. Patent and Trademark Office
Customer Service Window, Mail Stop Petitions
Randolph Building
401 Dulany Street
Alexandria, VA 22314

The centralized facsimile number is **(571) 273-8300.**

Telephone inquiries concerning this decision should be directed to Tredelle Jackson at (571) 272-2783.

Ramesh Krishnamurthy
Petitions Examiner
Office of Petitions

cc: **STEPHEN TODD**
DANISCO US INC.
925 PAGE MILL ROAD
PALO ALTO CA 94304

UNITED STATES PATENT AND TRADEMARK OFFICE

Commissioner for Patents
United States Patent and Trademark Office
P.O. Box 1450
Alexandria, VA 22313-1450
www.uspto.gov

MAILED

APR 07 2010

OFFICE OF PETITIONS

H. THOMAS ANDERTON, JR.
GENENCOR INTERNATIONAL, INC.
925 PAGE MILL ROAD
PALO ALTO CA 94304-1013

In re Application of	:	
Richard R. BOTT et al.	:	
Application No. 11/584,158	:	DECISION ON PETITION
Filed: October 20, 2006	:	
Attorney Docket No. **GC541-5-C2**	:	

This is a decision on the renewed petition under the unintentional provisions of 37 CFR 1.137(b), filed March 16, 2010, to revive the above-identified application.

The petition is **GRANTED**.

The application became abandoned for failure to reply in a timely manner to the non-final Office action mailed, April 27, 2009, which set a shortened statutory period for reply of three (3) months. No extensions of time under the provisions of 37 CFR 1.136(a) were obtained. Accordingly, the application became abandoned on July 28, 2009.

The petition satisfies the requirements of 37 CFR 1.137(b) in that petitioner has supplied (1) the reply in the form of an amendment, (2) the petition fee of $1620, and (3) an adequate statement of unintentional delay. Accordingly, the reply to the non-final Office action of April 27, 2009 is accepted as having been unintentionally delayed.

37 CFR 1.137(b)(3) requires a statement that "the entire delay in filing the required reply from the due date for the reply until the filing of a grantable petition pursuant to 37 CFR 1.137(b) was unintentional." Since the statement appearing in the petition varies from the language required by 37 CFR 1.137(b)(3), the statement is being construed as the required statement. Petitioner must notify the Office if this is **not** a correct reading of the statement appearing in the petition.

It is not apparent whether the person signing the statement of unintentional delay was in a position to have firsthand or direct knowledge of the facts and circumstances of the delay at issue. Nevertheless, such statement is being treated as having been made as the result of a

reasonable inquiry into the facts and circumstances of such delay. See 37 CFR 10.18(b) and Changes to Patent Practice and Procedure; Final Rule Notice, 62 Fed. Reg. 53131, 53178 (October 10, 1997), 1203 Off. Gaz. Pat. Office 63, 103 (October 21, 1997). In the event that such an inquiry has not been made, petitioner must make such an inquiry. If such inquiry results in the discovery that it is not correct that the entire delay in filing the required reply from the due date for the reply until the filing of a grantable petition pursuant to 37 CFR 1.137(b) was unintentional, petitioner must notify the Office.

There is no indication that the person signing the petition was ever given a power of attorney to prosecute the application. If the person signing the petition desires to receive future correspondence regarding this application, the appropriate power of attorney document must be submitted. While a courtesy copy of this decision is being mailed to the person signing the petition, all future correspondence will be directed to the address currently of record until appropriate instructions are received.

Telephone inquiries concerning this decision should be directed to Tredelle Jackson at (571) 272-2783.

This application is being referred to Technology Center AU 1623 for appropriate action on the concurrently filed amendment.

Ramesh Krishnamurthy

Ramesh Krishnamurthy
Petitions Examiner
Office of Petitions

cc: **STEPHEN TODD**
DANISCO US INC.
925 PAGE MILL ROAD
PALO ALTO CA 94304

UNITED STATES PATENT AND TRADEMARK OFFICE

Commissioner for Patents
United States Patent and Trademark Office
P.O. Box 1450
Alexandria, VA 22313-1450
www.uspto.gov

AMGEN INC.
MAIL STOP 28-2-C
ONE AMGEN CENTER DRIVE
THOUSAND OAKS CA 91320-1799

MAILED

JAN 25 2010

OFFICE OF PETITIONS

In re Application of	:	
Gegg et al.	:	
Application No. 11/584,177	:	DECISION ON PETITION
Filed: October 19, 2006	:	
Attorney Docket No. A-1061-US-NP	:	

This is a decision on the petition under the unintentional provisions of 37 CFR 1.137(b), filed December 1, 2009, to revive the above-identified application.

The petition is **GRANTED**.

The application became abandoned for failure to reply in a timely manner to the Restriction Requirement mailed February 19, 2009, which set a shortened statutory period for reply of one (1) month or thirty (30) days (whichever is later). No extensions of time under the provisions of 37 CFR 1.136(a) were obtained. Accordingly, the application became abandoned on March 20, 2009. A Notice of Abandonment was mailed September 3, 2009.

The petition satisfies the requirements of 37 CFR 1.137(b) in that petitioner has supplied (1) the reply in the form of a response to the Restriction Requirement, (2) the petition fee of $1,620.00 and (3) a proper statement of unintentional delay.

Telephone inquiries concerning this decision should be directed to the undersigned at (571)272-7751.

This application is being referred to Technology Center AU 1656 for appropriate action by the Examiner in the normal course of business on the reply received.

Joan Olszewski

Joan Olszewski
Petitions Examiner
Office of Petitions

UNITED STATES PATENT AND TRADEMARK OFFICE

Commissioner for Patents
United States Patent and Trademark Office
P.O. Box 1450
Alexandria, VA 22313-1450
www.uspto.gov

HELLER EHRMAN LLP
275 MIDDLEFIELD ROAD
MENLO PARK, CA 94025-3506

COPY MAILED

JUN 0 2 2008

OFFICE OF PETITIONS

In re Application of	:	
BUELOW, Roland et al.	:	
Application No. 11/584,187	:	DECISION ON PETITION
Filed: October 20, 2006	:	TO WITHDRAW
Attorney Docket No. **39691-0005D1**	:	FROM RECORD
	:	

This is a decision on the Request to Withdraw as attorney or agent of record under 37 C.F.R. § 1.36(b), filed April 10, 2008.

The request is **APPROVED**.

A grantable request to withdraw as attorney/agent of record must be signed by every attorney/agent seeking to withdraw or contain a clear indication that one attorney is signing on behalf of another/others. A request to withdraw will not be approved unless at least 30 (thirty) days would remain between the date of approval and the later of the expiration date of a time to file a response or the expiration date of the maximum time period which can be extended under 37 C.F.R. § 1.136(a).

The request was signed by Leslie B. Overman on behalf of all attorneys of record who are associated with customer No. 25213. All attorneys/agents associated have been withdrawn. Applicant is reminded that there is no attorney of record at this time.

The request to change the correspondence address of record is not acceptable as the requested correspondence address is not that of: (1) the first named signing inventor; or (2) an intervening assignee of the entire interest under 37 C.F.R 3.71. All future communications from the Office will be directed to the first named signing inventor.

There are no outstanding office actions at this time.

Telephone inquiries concerning this decision should be directed to Michelle R. Eason at 571-272-4231.

Michelle R. Eason
Paralegal Specialist
Office of Petitions

cc: **ROLAND BUELOW**
2747 ROSS ROAD
PALO ALTO, CA 94303

cc: **GOODWIN PROCTER LLP**
ATTN: PATENT ADMINISTRATOR
135 COMMONWEALTH DRIVE
MENLO PARK, CA 94025-1105

UNITED STATES PATENT AND TRADEMARK OFFICE

Commissioner for Patents
United States Patent and Trademark Office
P.O. Box 1450
Alexandria, VA 22313-1450
www.uspto.gov

GOODWIN PROCTER LLP
ATTN: PATENT ADMINISTRATOR
135 COMMONWEALTH DRIVE
MENLO PARK, CA 94025-1105

MAILED

MAY 06 2010

OFFICE OF PETITIONS

In re Application of
Roland Buelow, et al.
Application No. 11/584,187
Filed: October 20, 2006
Attorney Docket No. THP-0005-D1

DECISION ON PETITION
TO WITHDRAW
FROM RECORD

This is a decision on the Request to Withdraw as attorney or agent of record under 37 C.F.R. § 1.36(b), filed February 25, 2010.

The request is **DISMISSED** as moot.

A review of the file record indicates that the power of attorney to Goodwin Proctor, LLP has been revoked by the assignee of the patent application on March 2, 2010. Accordingly, the request to withdraw under 37 C.F.R. § 1.36(b) is moot.

All future communications from the Office will continue to be directed to the below-listed address until otherwise notified by applicant.

Telephone inquires concerning this decision should be directed to undersigned at 571-272-1642. All other inquiries concerning the examination or status of this application should be directed to the Technology Center.

/AMW/
April M. Wise
Petitions Examiner
Office of Petitions

cc: THERAPEUTIC HUMAN PLLYCLONALS, INC.
ROCHE DIAGNOSTICS, GMBH
HONNENWALD 2
PENZBERG D-82372
GERMANY

UNITED STATES PATENT AND TRADEMARK OFFICE

Commissioner for Patents
United States Patent and Trademark Office
P.O. Box 1450
Alexandria, VA 22313-1450
www.uspto.gov

MAILED

MAY 06 2009

OFFICE OF PETITIONS

ALTON W. PAYNE
5508 GRAND LAKE
HOUSTON, TX 77081

In re Application of Thomas Marion Kiec Application No. 11/584,228 Filed: October 20, 2006 Attorney Docket No. KIEC-02	: : : : :	ON PETITION

This is a decision in response to the petition, filed March 9, 2009, to revive the above-identified application under the provisions of 37 CFR 1.137(b).

The petition is **GRANTED**.

The application became abandoned for failure to reply in a timely manner to the non-final Office action mailed June 2, 2008, which set a shortened statutory period for reply of three (3) months. No extension of time under the provisions of 37 CFR 1.136(a) was obtained. Accordingly, the application became abandoned on September 3, 2008. A Notice of Abandonment was mailed on December 22, 2008. On March 9, 2009, the present petition was filed.

The petition satisfies the conditions for revival pursuant to the provisions of 37 CFR 1.137(b) in that petitioner has supplied (1) a proposed reply in the form of an amendment; (2) the petition fee of $810; and (3) an adequate statement of unintentional delay.

The application is being referred to Technology Center AU 1655 for appropriate action by the Examiner in the normal course of business on the response filed March 9, 2009.

Telephone inquiries concerning this decision should be directed to the undersigned at (571) 272-3204. Inquiries relating to further prosecution should be directed to the Technology Center.

Sherry D. Brinkley
Petitions Examiner
Office of Petitions

UNITED STATES PATENT AND TRADEMARK OFFICE

UNITED STATES DEPARTMENT OF COMMERCE
United States Patent and Trademark Office
Address: COMMISSIONER FOR PATENTS
P.O. Box 1450
Alexandria, Virginia 22313-1450
www.uspto.gov

APPLICATION NUMBER	FILING OR 371(C) DATE	FIRST NAMED APPLICANT	ATTY. DOCKET NO./TITLE
11/584,244	10/20/2006	Ivan Reid	SEI06-2373A

CONFIRMATION NO. 3413

26683
THE GATES CORPORATION
IP LAW DEPT. 10-A3
1551 WEWATTA STREET
DENVER, CO 80202

NONPUBLICATION RESCISSION LETTER

OC000000036043234

Date Mailed: 05/19/2009

Communication Regarding Rescission Of Nonpublication Request and/or Notice of Foreign Filing

Applicant's rescission of the previously-filed nonpublication request and/or notice of foreign filing is acknowledged. The paper has been reflected in the Patent and Trademark Office's (USPTO's) computer records so that the earliest possible projected publication date can be assigned.

The projected publication date is 08/27/2009.

If applicant rescinded the nonpublication request before or on the date of "foreign filing,"[1] then no notice of foreign filing is required.

If applicant foreign filed the application after filing the above application and before filing the rescission, and the rescission did not also include a notice of foreign filing, then a notice of foreign filing (not merely a rescission) is required to be filed within 45 days of the date of foreign filing. See 35 U.S.C. § 122(b)(2)(B)(iii), and Clarification of the United States Patent and Trademark Office's Interpretation of the Provisions of 35 U.S.C. § 122(b)(2)(B)(ii)-(iv), 1272 Off. Gaz. Pat. Office 22 (July 1, 2003).

If a notice of foreign filing is required and is not filed within 45 days of the date of foreign filing, then the application becomes abandoned pursuant to 35 U.S.C. § 122(b)(2)(B)(iii). In this situation, applicant should either file a petition to revive or notify the Office that the application is abandoned. See 37 CFR 1.137(f). Any such petition to revive will be forwarded to the Office of Petitions for a decision. Note that the filing of the petition will not operate to stay any period of reply that may be running against the application.

Questions regarding petitions to revive should be directed to the Office of Petitions at (571) 272-3282.

[1] Note, for purpose of this notice, that "foreign filing" means "filing an application directed to the same invention in another country, or under a multilateral international agreement, that requires publication of applications 18 months after filing".

/kocreasy/

Office of Data Management, Application Assistance Unit (571) 272-4000, or (571) 272-4200, or 1-888-786-0101

UNITED STATES PATENT AND TRADEMARK OFFICE

UNITED STATES DEPARTMENT OF COMMERCE
United States Patent and Trademark Office
Address: COMMISSIONER FOR PATENTS
P.O. Box 1450
Alexandria, Virginia 22313-1450
www.uspto.gov

GARDERE WYNNE SEWELL LLP
INTELLECTUAL PROPERTY SECTION
3000 THANKSGIVING TOWER
1601 ELM ST
DALLAS, TX 75201-4761

Mail Date: 04/21/2010

Applicant	: Federico Forte	: DECISION ON REQUEST FOR
Patent Number	: 7667537	: RECALCULATION of PATENT
Issue Date	: 02/23/2010	: TERM ADJUSTMENT IN VIEW
Appliction No	: 11/584,245	: OF WYETH AND NOTICE OF INTENT TO
Filed	: 10/20/2006	: ISSUE CERTIFICATE OF CORRECTION
		:

The Request for Recalculation is **GRANTED** to the extent indicated.

The patent term adjustment has been determined to be **51** days. The USPTO will *sua sponte* issue a certificate of correction reflecting the amount of PTA days determined by the recalculation.

Prior to the issuance of the certificate of correction, the USPTO will afford patentee an opportunity to be heard and request reconsideration. Accordingly, patentee has **one month or thirty (30) days**, whichever is longer, to file a request for reconsideration of this patent term adjustment calculation. See 35 U.S.C. 154(b)(3)(B)(ii) and 37 CFR 1.322(a)(4). No extensions of time will be granted under 37 CFR 1.136.

Patentee should use document code PET.OP if electronically filing a request for reconsideration of this patent term adjustment calculation. The patentee must also include the information required by 37 CFR 1.705(b)(2) and the fee required by 37 CFR 1.18(e). If patentee does not file a timely request for reconsideration of this patent term adjustment calculation including the information required by 37 CFR 1.705(b)(2) and the fee required by 37 CFR 1.18(e), the USPTO will issue a certificate of correction reflecting the PTA determination noted above.

Patentee should be aware that in order to preserve the right to review in the United States District Court for the District of Columbia of the USPTO patent term adjustment determination, patentee must ensure that he or she also take the steps required under 35 U.S.C. 154(b)(4)(A) in a timely manner. Nothing in the request for recalculation should be construed as providing an alternative time frame for commencing a civil action under 35 U.S.C. 154(b)(4)(A).

Any questions concerning this decision should be directed to the Office of Patent Legal Administration at 571-272-7702.

UNITED STATES PATENT AND TRADEMARK OFFICE

Commissioner for Patents
United States Patent and Trademark Office
P.O. Box 1450
Alexandria, VA 22313-1450
www.uspto.gov
DIW Jan-10

MICHAEL J. CHERSKOV
300 NORTH STATE STREET
SUITE 5102
CHICAGO IL 60654

COPY MAILED
JAN 26 2010

In re Application of Robert D. Harty Application Number: 11/584249 Filing Date: 10/20/2006 Attorney Docket Number: 0006-01565	DECISION DISMISSING PETITION

This is a decision in reference to the "PETITION TO CORRECT INCORRECTLY ENTERED DATE-IN," filed on January 8, 2010, which is treated as a petition filed under 37 CFR 1.10(d), requesting that the above-identified application be accorded a filing date of October 19, 2006, rather than the currently-accorded filing date of October 20, 2006.

The petition is **dismissed**.

Petitioner avers that the application was deposited in Express Mail service on October 19, 2006, but that the USPTO incorrectly accorded the application a filing date of October 20, 2006.

The petition is accompanied by a log book entry dated October 19, 2006 referencing the application by application number, date of completion, and attorney docket number. The petition is also accompanied by a statement by registered patent practitioner Michael J. Cherskov, stating that he created the log book entry after and within one business day of the date the application was placed at an Express Mail "building drop point." Petitioner further states, in the petition that "prior to the final pick-up USPS postage bins are left out in the open. At final pickup these bins are collected."

Paragraph (a) of 37 CFR 1.10 states that:

> Any correspondence received by the Patent and Trademark Office (Office) that was delivered by the "Express Mail Post Office to Addressee" service of the United States Postal Service (USPS) will be considered filed in the Office on the date of deposit with the USPS. The date of deposit with the USPS is shown by the "date-in" on the "Express Mail" mailing label or other official USPS notation. If the USPS deposit date cannot be determined, the correspondence will be accorded the Office receipt date as the filing date.[1] (emphasis added)

Paragraph (d) of 37 CFR 1.10 states that:

> Any person filing correspondence under this section that was received by the Office and delivered by the "Express Mail Post Office to Addressee" service of the USPS, who can show that the "date-in" on the "Express Mail" mailing label or other official notation entered by the USPS was incorrectly entered or omitted by the USPS, may petition the Director to accord the correspondence a filing date as of the date the correspondence is shown to have been deposited with the USPS, provided that:
> (1) The petition is filed promptly after the person becomes aware that the Office has accorded, or will accord, a filing date based upon an incorrect entry by the USPS;
> (2) The number of the "Express Mail" mailing label was placed on the paper(s) or fee(s) that constitute the correspondence prior to the original mailing by "Express Mail"; and
> (3) The petition includes a showing which establishes, to the satisfaction of the Director, that the requested filing date was the date the correspondence was deposited in "Express Mail Post Office to Addressee" service prior to the last scheduled pickup for that day. Any showing pursuant to this paragraph must be corroborated by evidence from the USPS or that came into being after deposit and within one business day of the deposit of the correspondence in the "Express Mail Post Office to Addressee" service of the USPS. Any statement submitted in support of such a showing pursuant to this paragraph must be a verified statement if made by a person other than an employee of the USPS or a practitioner as defined in § 10.1(r) of this chapter.

---

[1] See 37 CFR 1.6(a).

The showing of record has been considered, but is not persuasive.

At the outset, petitioner has not adequately explained why the petition was not more timely filed. A filing receipt and a Notice to File Missing Parts were mailed on November 8, 2006, showing a filing date of October 20, 2006. In this regard it is noted that applicants' response filed on December 26, 2006, to the Notice to File Missing Parts acknowledges a filing date of October 20, 2006. Further, a first Office action (restriction requirement) sent on September 8, 2009, also indicates a filing date of October 20, 2006. It is unclear why petitioner did not file the subject petition until January 8, 2010, over three (3) years after the date the Notice to File Missing Parts and the Filing Receipt were mailed. The long delay in petitioners' discovery that there was a discrepancy in the filing date is suggestive of a lack of diligence on the part of petitioners in that petitioners should have discovered earlier that the filing date accorded to the application was not the desired date and taken timely steps to address this issue.

Additionally, petitioner has not explained whether the "Express Mail" label was received from the USPS. Petitioners should explain whether the Express Mail label was received, and provide a copy of the label if the label was received by counsel.

Further, with regard to 37 CFR 1.10(d), petitioner has not presented corroborating evidence that the correspondence was deposited in Express Mail service prior to the last scheduled pickup for that day.

Specifically, counsel's affidavit and petition state that the Express Mail envelope was left in a "USPS postage bin" "along the west wall of the lobby of our office building").

These statements raise a question as to whether petitioner actually deposited the Express Mail envelope into an official USPS Express Mail drop box on the date in question. 37 CFR 1.10(d) permits the Office to correct a USPS "date-in" error when the correspondence is deposited in an "Express Mail" drop box prior to last scheduled pick up of the day, that is, the time clearly marked on the "Express Mail" drop box indicating when the box will be cleared for the last time on the date of deposit.[2]

---

[2] MPEP 513.

In this regard, petitioners must provide a statement from the USPS to the effect that the mail collection area in which the application was placed for mailing on October 19, 2006 is a recognized USPS Express Mail collection area from which Express Mail is officially collected by a USPS employee on a regular basis. Additionally, the last collection of the day by the USPS from that location must be specified.

Any request for reconsideration (no further petition fee is required) must be filed within TWO MONTHS of the date of this decision in order to be considered timely [37 CFR 1.181(f)].

Further correspondence with respect to this matter should be addressed as follows:

By mail: Mail Stop Petition
Commissioner for Patents
P.O. Box 1450
Alexandria, VA 22313-1450

By FAX: (571)273-8300
Attn: Office of Petitions

By hand: Customer Service Window
Mail Stop Petition
Randolph Building
401 Dulany Street
Alexandria VA 22314

A reply may also be filed by EFS-Web.

Telephone inquiries may be directed to the undersigned at 571-272-3231.

D Wood

Douglas I. Wood
Senior Petitions Attorney
Office of Petitions

UNITED STATES PATENT AND TRADEMARK OFFICE

UNITED STATES DEPARTMENT OF COMMERCE
United States Patent and Trademark Office
Address: COMMISSIONER FOR PATENTS
P.O. Box 1450
Alexandria, Virginia 22313-1450
www.uspto.gov

DORITY & MANNING, P.A.
POST OFFICE BOX 1449
GREENVILLE, SC 29602-1449

Mail Date: 04/21/2010

Applicant	: Henry Skoog	: DECISION ON REQUEST FOR
Patent Number	: 7588663	: RECALCULATION of PATENT
Issue Date	: 09/15/2009	: TERM ADJUSTMENT IN VIEW
Appliction No	: 11/584,273	: OF WYETH AND NOTICE OF INTENT TO
Filed	: 10/20/2006	: ISSUE CERTIFICATE OF CORRECTION
		:

The Request for Recalculation is **GRANTED** to the extent indicated.

The patent term adjustment has been determined to be **364** days. The USPTO will *sua sponte* issue a certificate of correction reflecting the amount of PTA days determined by the recalculation.

Prior to the issuance of the certificate of correction, the USPTO will afford patentee an opportunity to be heard and request reconsideration. Accordingly, patentee has **one month or thirty (30) days**, whichever is longer, to file a request for reconsideration of this patent term adjustment calculation. See 35 U.S.C. 154(b)(3)(B)(ii) and 37 CFR 1.322(a)(4). No extensions of time will be granted under 37 CFR 1.136.

Patentee should use document code PET.OP if electronically filing a request for reconsideration of this patent term adjustment calculation. The patentee must also include the information required by 37 CFR 1.705(b)(2) and the fee required by 37 CFR 1.18(e). If patentee does not file a timely request for reconsideration of this patent term adjustment calculation including the information required by 37 CFR 1.705(b)(2) and the fee required by 37 CFR 1.18(e), the USPTO will issue a certificate of correction reflecting the PTA determination noted above.

Patentee should be aware that in order to preserve the right to review in the United States District Court for the District of Columbia of the USPTO patent term adjustment determination, patentee must ensure that he or she also take the steps required under 35 U.S.C. 154(b)(4)(A) in a timely manner. Nothing in the request for recalculation should be construed as providing an alternative time frame for commencing a civil action under 35 U.S.C. 154(b)(4)(A).

Any questions concerning this decision should be directed to the Office of Patent Legal Administration at 571-272-7702.

UNITED STATES PATENT AND TRADEMARK OFFICE

Commissioner for Patents
United States Patent and Trademark Office
P.O. Box 1450
Alexandria, VA 22313-1450
www.uspto.gov

MEADWESTVACO CORPORATION
ALEXANDRA B. URBAN,ESQ.
299 PARK AVENUE, 13TH FLOOR
NEW YORK, NY 10171

COPY MAILED

JUL 11 2007

OFFICE OF PETITIONS

In re Application of:	:	
Gelardi et al.	:	DECISION DISMISSING
Application No. 11/584288	:	PETITION UNDER
Filing or 371(c) Date: 10/20/2006	:	37 CFR 1.47(a)
Title of Invention:	:	
PACKAGE WITH	:	
SECURITY FEATURES	:	

This Decision is in response to the Petition Under 37 CFR 1.47(a)," filed May 11, 2007, to allow the other inventor(s) to proceed with the application on behalf of himself or herself and the nonsigning inventor(s). See, MPEP 409.03.

The petition is **dismissed**.

Rule 47 applicant is given TWO (2) MONTHS from the mailing date of this decision to reply, correcting the below-noted deficiencies. Any reply should be entitled "Request for Reconsideration of Petition Under [insert the applicable code section]"; should only address the deficiencies noted below, except that the reply may include an oath or declaration executed by the non-signing inventor. Failure to respond will result in abandonment of the application. Any extensions of time will be governed by 37 CFR 1.136(a).

The above-identified application was filed on October 20, 2006, without, a fully executed oath or declaration. The Office mailed a Notice to File Missing Parts of Nonprovisional Application (Notice), on November 13, 2006, requiring *inter alia*, a properly signed oath or declaration.

The present petition

Applicant files the instant petition in response to the Notice, along with an oath/declaration listing the inventors. A review of the oath/declaration reveals that the citizenship of inventor Frietag is missing.

Applicable law, Rules and/or MPEP

A grantable petition under 37 CFR 1.47(a) requires: (1) proof that the non-signing inventor cannot be reached or refuses to sign the oath or declaration after having been presented with

the application papers (specification, claims and drawings); (2) an acceptable oath or declaration in compliance with 35 U.S.C. §§ 115 and 116; (3) the petition fee; and (4) a statement of the last known address of the non-signing inventor. Applicant lacks item (2) set forth above.

35 U.S.C. 115, Oath of applicant, provides, in relevant part:

> The applicant shall make oath that he believes himself to be the original and first inventor of the process, machine, manufacture, or composition of matter, or improvement thereof, for which he solicits a patent; and shall state of what country he is a citizen.

37 CFR § 1.63, Oath or declaration provides, in relevant part:

> (a) An oath or declaration filed under § 1.51(b)(2) as a part of a nonprovisional application must:
> (2) Identify each inventor by full name, including the family name, and at least one given name without abbreviation together with any other given name or initial;
> (3) Identify the country of citizenship of each inventor;

As to item (2), a Supplemental Oath or Declaration in compliance with 35 U.S.C. §§ 115 and 116, and 37 CFR 1.63 is required.

Further correspondence with respect to this matter should be addressed as follows:

By mail: Commissioner for Patents
PO Box 1450
Alexandria, VA 22313-1450

By FAX: (571) 273-8300
Attn: Office of Petitions

By hand: Customer Service Window
Randolph Building
401 Dulany Street
Alexandria, VA 22314

Telephone inquiries concerning this matter should be directed to the undersigned at (571) 272-3232.

Derek L. Woods
Attorney
Office of Petitions

UNITED STATES PATENT AND TRADEMARK OFFICE

Commissioner for Patents
United States Patent and Trademark Office
P.O. Box 1450
Alexandria, VA 22313-1450
www.uspto.gov

MEADWESTVACO CORPORATION
ALEXANDRA B. URBAN,ESQ.
299 PARK AVENUE, 13TH FLOOR
NEW YORK, NY 10171

COPY MAILED

SEP 20 2007

OFFICE OF PETITIONS

In re Application of:	:	
Gelardi et al.	:	DECISION GRANTING
Application No. 11/584288	:	PETITION UNDER
Filing or 371(c) Date: 10/20/2006	:	37 CFR 1.47(a)
Title of Invention:	:	
PACKAGE WITH	:	
SECURITY FEATURES	:	

This Decision is in response to the Request for Reconsideration of Petition Under 37 CFR 1.47(a)," filed August 13, 2007, to allow the other inventor(s) to proceed with the application on behalf of himself or herself and the nonsigning inventor(s). See, MPEP 409.03.

The petition is **granted**.

The above-identified application and papers have been reviewed and found in compliance with 37 CFR 1.47(a). This application is hereby accorded Rule 1.47(a) status.

Petitioner has shown that the non-signing inventor, James Phillipe, refuses to join in the application.

As provided in Rule 1.47(a), this Office will forward notice of this application's filing to the non-signing inventor at the addresses given in the Petition. Notice of the filing of this application will also be published in the Official Gazette.

The application file is being referred to the Office of Initial Patent Examination for continued processing in due course.

Telephone inquiries related to this decision may be directed to the undersigned at (571) 272-3232.

Derek L. Woods
Attorney
Office of Petitions

UNITED STATES PATENT AND TRADEMARK OFFICE

Commissioner for Patents
United States Patent and Trademark Office
P.O. Box 1450
Alexandria, VA 22313-1450
www.uspto.gov

Michael J. Pollack
EDWARDS ANGELL PALMER & DODGE LLP
P.O. Box 55874
Boston MA 02205

COPY MAILED

AUG 0 3 2007

OFFICE OF PETITIONS

In re Application of:	:	
Johnston et al.	:	
Application No. 11/584289	:	DECISION GRANTING
Filing or 371(c) Date: 10/20/2006	:	PETITION UNDER
Title of Invention:	:	37 CFR 1.47(a)
MEDIA CONTAINER WITH	:	
BAND HEADER	:	

This Decision is in response to the "Petition Under 37 C.F.R.§ 1.47(a)", filed June 8, 2007, to allow the other inventor(s) to proceed with the application on behalf of himself or herself and the nonsigning inventor(s).

The petition is **granted**.

The above-identified application and papers have been reviewed and found in compliance with 37 CFR 1.47(a). This application is hereby accorded Rule 1.47(a) status.

Petitioner has shown that the non-signing inventor, James Philippe, refuses to join in the application.

As provided in Rule 1.47(a), this Office will forward notice of this application's filing to the non-signing inventor at the addresses given in the Petition. Notice of the filing of this application will also be published in the Official Gazette.

The application file is being referred to the Office of Initial Patent Examination for continued processing.

Telephone inquiries related to this decision may be directed to the undersigned at (571) 272-3232.

Derek L. Woods
Attorney
Office of Petitions

UNITED STATES PATENT AND TRADEMARK OFFICE

Commissioner for Patents
United States Patent and Trademark Office
P.O. Box 1450
Alexandria, VA 22313-1450
www.uspto.gov

MR. JAMES PHILIPPE
7 DEBORAH AVENUE
SANFORD, ME 04073

COPY MAILED

AUG 0 3 2007

OFFICE OF PETITIONS

In re Application of:	:	
Johnston et al.	:	
Application No. 11/584289	:	LETTER
Filing or 371(c) Date: 10/20/2006	:	
Title of Invention:	:	
MEDIA CONTAINER WITH	:	
BAND HEADER	:	

Dear Mr. Philippe:

You are named as a joint inventor in the above-identified United States patent application filed under the provisions of 35 U.S.C. 116 (United States Code) and 37 CFR 1.47(a), Rules of Practice in Patent Cases. Should a patent be granted on the application you will be designated therein as a joint inventor.

As a named inventor you are entitled to inspect any paper in the file wrapper of the application, order copies of all or any part thereof (at a prepaid cost per 37 CFR 1.19) or make your position of record in the application. Alternatively, you may arrange to do any of the preceding through a registered patent attorney or agent presenting written authorization from you. If you care to join the application, counsel of record (see below) would presumably assist you. Joining in the application would entail the filing of an appropriate oath or declaration by you pursuant to 37 CFR 1.63.

Telephone inquiries regarding this communication should be directed to the undersigned at (571) 272-3232. Requests for information regarding your application should be directed to the File Information Unit at (703) 308-2733. Information regarding how to pay for and order a copy of the application, or a specific paper in the application, should be directed to Certification Division at (703) 308-9726 or 1-800-972-6382 (outside the Washington D.C. area).

Derek L. Woods
Attorney
Office of Petitions

CC: Michael J. Pollack
EDWARDS ANGELL PALMER & DODGE LLP
P.O. Box 55874
Boston MA 02205

UNITED STATES PATENT AND TRADEMARK OFFICE

UNITED STATES DEPARTMENT OF COMMERCE
United States Patent and Trademark Office
Address: COMMISSIONER FOR PATENTS
P.O. Box 1450
Alexandria, Virginia 22313-1450
www.uspto.gov

APPLICATION NO.	FILING DATE	FIRST NAMED INVENTOR	ATTORNEY DOCKET NO.	CONFIRMATION NO.
11/584,290	10/20/2006	Tony Tadin	824.0044USU	5028

7590 09/16/2008

Paul D. Greeley
Ohlandt, Greeley, Ruggiero & Perle, L.L.P.
10th Floor
One Landmark Square
Stamford, CT 06901-2682

EXAMINER
COSIMANO, EDWARD R

ART UNIT	PAPER NUMBER
2863	

MAIL DATE	DELIVERY MODE
09/16/2008	PAPER

Please find below and/or attached an Office communication concerning this application or proceeding.

The time period for reply, if any, is set in the attached communication.

UNITED STATES PATENT AND TRADEMARK OFFICE

COMMISSIONER FOR PATENTS
UNITED STATES PATENT AND TRADEMARK OFFICE
P.O. BOX 1450
ALEXANDRIA, VA 22313-1450
www.uspto.gov

In re Application of TADIN ET AL.
Appl. No.: 11/584,290
Filed: October 20, 2006
For: METHOD OF DETERMINING RELATIVE MOBILITY OF REGIONS OF THE FOOT

DECISION on PETITION
37 CFR 1.84(b)(2)

This is a decision in response to the petition filed June 2, 2008 in the above-identified application. Petitioner request that color drawings be accepted in accordance with 37 CFR 1.84(a)(2). The petition states that the comparison of the loaded and unloaded foot shown Fig. 5 and Figure 6 is best illustrated by the color-coded topographical. The Petition further states that color drawings are the most practicable medium for illustrating the claimed invention and detail of the invention depicted in Figure 7 and Figure 10.

The papers filed on June 2, 2008 fulfill the requirements set forth in 37 CFR 1.84(a) (2) and the petition is granted.

SUMMARY: The petition is granted.

Hezron E. Williams

Hezron E. Williams, SPE
Patent Examining Technology Center 2800

Paul D. Greeley
Ohlandt, Greeley, Ruggiero & Perle, L.L.P.
10th Floor
One Landmark Square
Stamford, CT 06901-2682

SPE RESPONSE FOR CERTIFICATE OF CORRECTION

Paper No.: _____

DATE : 6/23/09

TO SPE OF : ART UNIT 1791

SUBJECT : Request for Certificate of Correction for Appl. No.: 11584295 Patent No.: 7458800 B2

Please respond to this request for a certificate of correction within 7 days.

FOR IFW FILES:

Please review the requested changes/corrections as shown in the **COCIN** document(s) in the IFW application image. No new matter should be introduced, nor should the scope or meaning of the claims be changed.

Please complete the response (see below) and forward the completed response to scanning using document code **COCX**.

FOR PAPER FILES:

Please review the requested changes/corrections as shown in the attached certificate of correction. Please complete this form (see below) and forward it with the file to:

Certificates of Correction Branch (CofC)
South Tower - 9A22
Palm Location 7580
You can fax the Directors/SPE response to 571-270-9990

LAMONTE NEWSOME
Certificates of Correction Branch
703-308-9390 ext. 112

Thank You For Your Assistance

The request for issuing the above-identified correction(s) is hereby:
Note your decision on the appropriate box.

- ☒ **Approved** — **All** changes apply.
- ☐ **Approved in Part** — Specify below which changes **do not** apply.
- ☐ **Denied** — State the reasons for denial below.

Comments: _____

PHILIP TUCKER 1791

SPE RESPONSE FOR CERTIFICATE OF CORRECTION

SPE	Art Unit

UNITED STATES PATENT AND TRADEMARK OFFICE

Commissioner for Patents
United States Patent and Trademark Office
P.O. Box 1450
Alexandria, VA 22313-1450
www.uspto.gov

Galgano & Associates, Pllc
Suite 133
300 Rabro Drive
Hauppauge NY 11788

APR 05 2007

In re Application of: MANGANO Serial No.: 11/584,323 Filed: October 20, 2006 Title: EXPANDABLE BAG	DECISION ON PETITION TO MAKE SPECIAL FOR NEW APPLICATION UNDER 37 C.F.R. § 1.102 & M.P.E.P. § 708.02

This is a decision on the petition filed on October 20, 2006 to make the above-identified application special for accelerated examination procedure under 37 C.F.R. § 1.102(d).

The petition to make the application special is **DENIED**.

REGULATION AND PRACTICE

To be eligible for accelerated examination under 37 C.F.R. § 1.102(d) and pursuant to the "Change to Practice for Petitions in Patent Applications to Make Special and for Accelerated Examination" published in the Federal Register on June 26, 2006 (71 Fed. Reg. 36323), the following conditions must be satisfied:

1. The application must be a non-reissue utility or design application filed under 37 CFR 1.111(a);
2. The application, the petition and the required fees must be filed electronically using the USPTO's electronic filing system (EFS), or EFS-web; if not filed electronically, a statement asserting that EFS and EFS-web were not available during the normal business hours;
3. The application, at the time of filing, must be complete under 37 CFR 1.51 and in condition for examination;
4. The application must contain three or fewer independent claims and twenty or fewer total claims and the claims must be directed to a single invention.
5. The petition must be filed with the application.

The application as filed is not eligible for the accelerated examination under 37 C.F.R. § 1.102(d) because the petition was not filed electronically using the USPTO's electronic filing system (EFS), or EFS-web; further it does not contain a statement asserting that EFS and EFS-web were not available during the normal business hours. Additionally, the application was filed

with more than twenty total claims. As noted in the policy statement referenced above, any petition to make special filed on or after the effective date must meet the new requirements set forth in the 71 Fed. Reg. 36323 notice. The effective date of the change in practice was August 25, 2006. Thus the instant petition must be reviewed under the revised practice and the instant application is ineligible.

The petition appears on its face to have been filed without recognition of the August 25, 2006 policy change to the petition to make special program. The changes to the program are substantial. A copy of Federal Register on June 26, 2006 (71 Fed. Reg. 36323) is being attached to the mailed decision for petitioner's review. Further guidance may be found at www.USPTO.gov under the accelerated examination link.

For the above-stated reasons, the petition is **DENIED**. The application will therefore be taken up by the examiner for action in its regular turn.

Any inquiry regarding this decision should be directed to J. Harrison, TC 3700 Special Program Examiner, at (571) 272-4449.

J. Harrison
Special Program Examiner
Technology Center 3700

UNITED STATES PATENT AND TRADEMARK OFFICE

UNITED STATES DEPARTMENT OF COMMERCE
United States Patent and Trademark Office
Address: COMMISSIONER FOR PATENTS
P.O. Box 1450
Alexandria, Virginia 22313-1450
www.uspto.gov

FULBRIGHT & JAWORSKI L.L.P
2200 ROSS AVENUE
SUITE 2800
DALLAS, TX 75201-2784

Mail Date: 04/21/2010

Applicant	: Ross D. Murch	: DECISION ON REQUEST FOR
Patent Number	: 7629930	: RECALCULATION of PATENT
Issue Date	: 12/08/2009	: TERM ADJUSTMENT IN VIEW
Appliction No	: 11/584,332	: OF WYETH AND NOTICE OF INTENT TO
Filed	: 10/20/2006	: ISSUE CERTIFICATE OF CORRECTION
		:

The Request for Recalculation is **GRANTED** to the extent indicated.

The patent term adjustment has been determined to be **494** days. The USPTO will *sua sponte* issue a certificate of correction reflecting the amount of PTA days determined by the recalculation.

Prior to the issuance of the certificate of correction, the USPTO will afford patentee an opportunity to be heard and request reconsideration. Accordingly, patentee has **one month or thirty (30) days**, whichever is longer, to file a request for reconsideration of this patent term adjustment calculation. See 35 U.S.C. 154(b)(3)(B)(ii) and 37 CFR 1.322(a)(4). No extensions of time will be granted under 37 CFR 1.136.

Patentee should use document code PET.OP if electronically filing a request for reconsideration of this patent term adjustment calculation. The patentee must also include the information required by 37 CFR 1.705(b)(2) and the fee required by 37 CFR 1.18(e). If patentee does not file a timely request for reconsideration of this patent term adjustment calculation including the information required by 37 CFR 1.705(b)(2) and the fee required by 37 CFR 1.18(e), the USPTO will issue a certificate of correction reflecting the PTA determination noted above.

Patentee should be aware that in order to preserve the right to review in the United States District Court for the District of Columbia of the USPTO patent term adjustment determination, patentee must ensure that he or she also take the steps required under 35 U.S.C. 154(b)(4)(A) in a timely manner. Nothing in the request for recalculation should be construed as providing an alternative time frame for commencing a civil action under 35 U.S.C. 154(b)(4)(A).

Any questions concerning this decision should be directed to the Office of Patent Legal Administration at 571-272-7702.

UNITED STATES PATENT AND TRADEMARK OFFICE

UNITED STATES DEPARTMENT OF COMMERCE
United States Patent and Trademark Office
Address: COMMISSIONER FOR PATENTS
P.O. Box 1450
Alexandria, Virginia 22313-1450
www.uspto.gov

Silicon Valley Patent Group LLP
Attn: SYNOPSYS
18805 Cox Avenue
Suite 220
Saratoga, CA 95070

Mail Date: 04/21/2010

Applicant	: Hua Song	: DECISION ON REQUEST FOR
Patent Number	: 7636904	: RECALCULATION of PATENT
Issue Date	: 12/22/2009	: TERM ADJUSTMENT IN VIEW
Appliction No	: 11/584,356	: OF WYETH AND NOTICE OF INTENT TO
Filed	: 10/20/2006	: ISSUE CERTIFICATE OF CORRECTION
		:

The Request for Recalculation is **GRANTED** to the extent indicated.

The patent term adjustment has been determined to be **424** days. The USPTO will *sua sponte* issue a certificate of correction reflecting the amount of PTA days determined by the recalculation.

Prior to the issuance of the certificate of correction, the USPTO will afford patentee an opportunity to be heard and request reconsideration. Accordingly, patentee has **one month or thirty (30) days**, whichever is longer, to file a request for reconsideration of this patent term adjustment calculation. See 35 U.S.C. 154(b)(3)(B)(ii) and 37 CFR 1.322(a)(4). No extensions of time will be granted under 37 CFR 1.136.

Patentee should use document code PET.OP if electronically filing a request for reconsideration of this patent term adjustment calculation. The patentee must also include the information required by 37 CFR 1.705(b)(2) and the fee required by 37 CFR 1.18(e). If patentee does not file a timely request for reconsideration of this patent term adjustment calculation including the information required by 37 CFR 1.705(b)(2) and the fee required by 37 CFR 1.18(e), the USPTO will issue a certificate of correction reflecting the PTA determination noted above.

Patentee should be aware that in order to preserve the right to review in the United States District Court for the District of Columbia of the USPTO patent term adjustment determination, patentee must ensure that he or she also take the steps required under 35 U.S.C. 154(b)(4)(A) in a timely manner. Nothing in the request for recalculation should be construed as providing an alternative time frame for commencing a civil action under 35 U.S.C. 154(b)(4)(A).

Any questions concerning this decision should be directed to the Office of Patent Legal Administration at 571-272-7702.

UNITED STATES PATENT AND TRADEMARK OFFICE

Commissioner for Patents
United States Patent and Trademark Office
P.O. Box 1450
Alexandria, VA 22313-1450
www.uspto.gov

COPY MAILED

SEP 0 8 2009

OFFICE OF PETITIONS

NILS PETER MICKELSON
228 WATERMAN ROAD
BUXTON ME 04093

In re Application of	:	
Bergstrom, et al.	:	
Application No. 11/584,373	:	ON PETITION
Filed: October 20, 2006	:	
Attorney Docket No. 06-060	:	

This is a decision on the petition to revive under 37 CFR 1.137(b), filed July 23, 2009.

The petition under 37 CFR 1.137(b) is **GRANTED**.

The above-identified application became abandoned for failure to timely pay the issue fee in response to the Notice of Allowance mailed March 11, 2009. This Notice set a statutory period for reply of three months for issue fee transmittal. No issue fee having been received, the application became abandoned on June 12, 2009. The Office mailed a Notice of Abandonment on July 6, 2009.

With the instant petition, petitioner paid the petition fee, made the proper statement of unintentional delay, and submitted the required reply in the form of the issue fee.

The application is being forwarded to the Office of Data Management for processing into a patent.

Telephone inquiries related to this decision should be directed to the undersigned at (571)272-3207.

Cliff Congo
Petitions Attorney
Office of Petitions

UNITED STATES PATENT AND TRADEMARK OFFICE

UNITED STATES DEPARTMENT OF COMMERCE
United States Patent and Trademark Office
Address: COMMISSIONER FOR PATENTS
P.O. Box 1450
Alexandria, Virginia 22313-1450
www.uspto.gov

MUIRHEAD AND SATURNELLI, LLC
200 FRIBERG PARKWAY
SUITE 1001
WESTBOROUGH, MA 01581

Mail Date: 04/21/2010

Applicant	: Ajit S. Nagral	: DECISION ON REQUEST FOR
Patent Number	: 7587413	: RECALCULATION of PATENT
Issue Date	: 09/08/2009	: TERM ADJUSTMENT IN VIEW
Appliction No	: 11/584,384	: OF WYETH AND NOTICE OF INTENT TO
Filed	: 10/20/2006	: ISSUE CERTIFICATE OF CORRECTION
		:

The Request for Recalculation is **GRANTED** to the extent indicated.

The patent term adjustment has been determined to be **366** days. The USPTO will *sua sponte* issue a certificate of correction reflecting the amount of PTA days determined by the recalculation.

Prior to the issuance of the certificate of correction, the USPTO will afford patentee an opportunity to be heard and request reconsideration. Accordingly, patentee has **one month or thirty (30) days**, whichever is longer, to file a request for reconsideration of this patent term adjustment calculation. See 35 U.S.C. 154(b)(3)(B)(ii) and 37 CFR 1.322(a)(4). No extensions of time will be granted under 37 CFR 1.136.

Patentee should use document code PET.OP if electronically filing a request for reconsideration of this patent term adjustment calculation. The patentee must also include the information required by 37 CFR 1.705(b)(2) and the fee required by 37 CFR 1.18(e). If patentee does not file a timely request for reconsideration of this patent term adjustment calculation including the information required by 37 CFR 1.705(b)(2) and the fee required by 37 CFR 1.18(e), the USPTO will issue a certificate of correction reflecting the PTA determination noted above.

Patentee should be aware that in order to preserve the right to review in the United States District Court for the District of Columbia of the USPTO patent term adjustment determination, patentee must ensure that he or she also take the steps required under 35 U.S.C. 154(b)(4)(A) in a timely manner. Nothing in the request for recalculation should be construed as providing an alternative time frame for commencing a civil action under 35 U.S.C. 154(b)(4)(A).

Any questions concerning this decision should be directed to the Office of Patent Legal Administration at 571-272-7702.

UNITED STATES PATENT AND TRADEMARK OFFICE

Commissioner for Patents
United States Patent and Trademark Office
P.O. Box 1450
Alexandria, VA 22313-1450
www.uspto.gov

MORRISON & FOERSTER LLP
425 MARKET STREET
SAN FRANCISCO CA 94105-2482

MAILED

OCT 1 4 2009

OFFICE OF PETITIONS

In re Application of	:	
Farinas et al.	:	DECISION ON PETITION
Application No. 11/584,394	:	TO WITHDRAW
Filed: October 19, 2006	:	FROM RECORD
Attorney Docket No. 509232001000(P833)	:	

This is a decision on the Request to Withdraw as attorney or agent of record under 37 C.F.R. § 1.36(b), filed August 28, 2009.

The request is **NOT APPROVED.**

The Request for Withdrawal as Attorney or Agent and Change of Correspondence Address submitted on August 28, 2009 is hereby not accepted. Petitioner has not complied with current USPTO requirements, as set forth in 37 CFR 10.40 concerning Request for Withdrawal as Attorney and Change of Correspondence Address. Specifically, pursuant to 37 CFR 10.40, the Office will require the practitioner(s) to certify that he, she or they have:

(1) given reasonable notice to the client, prior to the expiration of the reply period, that the practitioner(s) intends to withdraw from employment;

(2) delivered to the client or a duly authorized representative of the client all papers and property (including funds) to which the client is entitled; and

(3) notified the client of any replies that may be due and the time frame within which the client must respond.

Petitioner has not complied with item (3) of the above certifications.

Currently, there is an outstanding Office action mailed July 10, 2009 that requires a reply.

Further, the address given on the petition differs from the address of record. A courtesy copy of this decision is being mailed to the address given on the petition; however, the Office will mail all future correspondence solely to the address of record.

Telephone inquires concerning this decision should be directed to the undersigned at (571) 272-7751. All other inquires concerning either the examination or status of the application should be directed to the Technology Center.

Joan Olszewski

Joan Olszewski
Petitions Examiner
Office of Petitions

cc: Norman R. Klivans
Morrison & Foerster LLP
755 Page Mill Road
Palo Alto CA 94105-2482

UNITED STATES PATENT AND TRADEMARK OFFICE

Commissioner for Patents
United States Patent and Trademark Office
P.O. Box 1450
Alexandria, VA 22313-1450
www.uspto.gov

MORRISON & FOERSTER, LLP
555 WEST FIFTH STREET
SUITE 3500
LOS ANGELES, CA 90013-1024

COPY MAILED

JUN 2 4 2008

OFFICE OF PETITIONS

In re Application of	:	
Theodore L. GRIGGS	:	
Application No. 11/584,399	:	DECISION ON PETITION
Filed: October 19, 2006	:	TO WITHDRAW
Attorney Docket No. L1911-000023	:	FROM RECORD
	:	

This is a decision on the Request to Withdraw as attorney or agent of record under 37 C.F.R. § 1.36(b), filed April 9, 2008.

The request is **DISMISSED** as moot.

A review of the file record indicates that the power of attorney to Morrison & Foerster, LLP, has been revoked by the applicant of the patent application on May 8, 2008. Accordingly, the request to withdraw under 37 C.F.R. § 1.36(b) is moot.

The correspondence address of record has been changed and the new correspondence address is the address indicated below.

Telephone inquires concerning this decision should be directed to undersigned at 571-272- 6735.

Diane Goodwyn
Petitions Examiner
Office of Petitions

UNITED STATES PATENT AND TRADEMARK OFFICE

UNITED STATES DEPARTMENT OF COMMERCE
United States Patent and Trademark Office
Address: COMMISSIONER FOR PATENTS
P.O. Box 1450
Alexandria, Virginia 22313-1450
www.uspto.gov

APPL NO.	FILING OR 371(c) DATE	ART UNIT	FIL FEE REC'D	ATTY.DOCKET NO	TOT CLMS	IND CLMS
11/584,413	10/19/2006	1642	8900	39766-0160 R3-1C2	81	21

CONFIRMATION NO. 5340

UPDATED FILING RECEIPT

OC000000023196824

25213
HELLER EHRMAN LLP
275 MIDDLEFIELD ROAD
MENLO PARK, CA 94025-3506

Date Mailed: 04/02/2007

Receipt is acknowledged of this regular Patent Application. It will be considered in its order and you will be notified as to the results of the examination. Be sure to provide the U.S. APPLICATION NUMBER, FILING DATE, NAME OF APPLICANT, and TITLE OF INVENTION when inquiring about this application. Fees transmitted by check or draft are subject to collection. Please verify the accuracy of the data presented on this receipt. **If an error is noted on this Filing Receipt, please mail to the Commissioner for Patents P.O. Box 1450 Alexandria Va 22313-1450. Please provide a copy of this Filing Receipt with the changes noted thereon. If you received a "Notice to File Missing Parts" for this application, please submit any corrections to this Filing Receipt with your reply to the Notice. When the USPTO processes the reply to the Notice, the USPTO will generate another Filing Receipt incorporating the requested corrections (if appropriate).**

Applicant(s)

Aya Jakobovits, Beverly Hills, CA;
Soudabeh Etessami, Tarzana, CA;
Pia M. Challita-Eid, Encino, CA;
Juan J. Perez-Villar, Los Angeles, CA;
Karen J. Morrison Morrison, Santa Monica, CA;
Xiao-Chi Jia, Los Angeles, CA;
Mary Faris, Los Angeles, CA;
Jean Gudas, Pacific Palisades, CA;
Arthur B. Raitano, Los Angeles, CA;

Power of Attorney: The patent practitioners associated with Customer Number **25213**.

Domestic Priority data as claimed by applicant

This application is a CON of 10/830,899 04/23/2004
which is a CIP of 10/236,878 09/06/2002
which claims benefit of 60/370,387 04/05/2002
and claims benefit of 60/317,840 09/06/2001

Foreign Applications

If Required, Foreign Filing License Granted: 11/09/2006

The country code and number of your priority application, to be used for filing abroad under the Paris Convention, is US11/584,413

Projected Publication Date: 07/12/2007

Non-Publication Request: No

Early Publication Request: No

Title

Antibodies and molecules derived therefrom that bind to steap-1 proteins

Preliminary Class

424

PROTECTING YOUR INVENTION OUTSIDE THE UNITED STATES

Since the rights granted by a U.S. patent extend only throughout the territory of the United States and have no effect in a foreign country, an inventor who wishes patent protection in another country must apply for a patent in a specific country or in regional patent offices. Applicants may wish to consider the filing of an international application under the Patent Cooperation Treaty (PCT). An international (PCT) application generally has the same effect as a regular national patent application in each PCT-member country. The PCT process **simplifies** the filing of patent applications on the same invention in member countries, but **does not result** in a grant of "an international patent" and does not eliminate the need of applicants to file additional documents and fees in countries where patent protection is desired.

Almost every country has its own patent law, and a person desiring a patent in a particular country must make an application for patent in that country in accordance with its particular laws. Since the laws of many countries differ in various respects from the patent law of the United States, applicants are advised to seek guidance from specific foreign countries to ensure that patent rights are not lost prematurely.

Applicants also are advised that in the case of inventions made in the United States, the Director of the USPTO must issue a license before applicants can apply for a patent in a foreign country. The filing of a U.S. patent application serves as a request for a foreign filing license. The application's filing receipt contains further information and guidance as to the status of applicant's license for foreign filing.

Applicants may wish to consult the USPTO booklet, "General Information Concerning Patents" (specifically, the section entitled "Treaties and Foreign Patents") for more information on timeframes and deadlines for filing foreign patent applications. The guide is available either by contacting the USPTO Contact Center at 800-786-9199, or it can be viewed on the USPTO website at http://www.uspto.gov/web/offices/pac/doc/general/index.html.

For information on preventing theft of your intellectual property (patents, trademarks and copyrights), you may wish to consult the U.S. Government website, http://www.stopfakes.gov. Part of a Department of Commerce initiative, this website includes self-help "toolkits" giving innovators guidance on how to protect intellectual property in specific countries such as China, Korea and Mexico. For questions regarding patent enforcement issues, applicants may call the U.S. Government hotline at 1-866-999-HALT (1-866-999-4158).

LICENSE FOR FOREIGN FILING UNDER
Title 35, United States Code, Section 184
Title 37, Code of Federal Regulations, 5.11 & 5.15

GRANTED

The applicant has been granted a license under 35 U.S.C. 184, if the phrase "IF REQUIRED, FOREIGN FILING

LICENSE GRANTED" followed by a date appears on this form. Such licenses are issued in all applications where the conditions for issuance of a license have been met, regardless of whether or not a license may be required as set forth in 37 CFR 5.15. The scope and limitations of this license are set forth in 37 CFR 5.15(a) unless an earlier license has been issued under 37 CFR 5.15(b). The license is subject to revocation upon written notification. The date indicated is the effective date of the license, unless an earlier license of similar scope has been granted under 37 CFR 5.13 or 5.14.

This license is to be retained by the licensee and may be used at any time on or after the effective date thereof unless it is revoked. This license is automatically transferred to any related applications(s) filed under 37 CFR 1.53(d). This license is not retroactive.

The grant of a license does not in any way lessen the responsibility of a licensee for the security of the subject matter as imposed by any Government contract or the provisions of existing laws relating to espionage and the national security or the export of technical data. Licensees should apprise themselves of current regulations especially with respect to certain countries, of other agencies, particularly the Office of Defense Trade Controls, Department of State (with respect to Arms, Munitions and Implements of War (22 CFR 121-128)); the Bureau of Industry and Security, Department of Commerce (15 CFR parts 730-774); the Office of Foreign Assets Control, Department of Treasury (31 CFR Parts 500+) and the Department of Energy.

NOT GRANTED

No license under 35 U.S.C. 184 has been granted at this time, if the phrase "IF REQUIRED, FOREIGN FILING LICENSE GRANTED" DOES NOT appear on this form. Applicant may still petition for a license under 37 CFR 5.12, if a license is desired before the expiration of 6 months from the filing date of the application. If 6 months has lapsed from the filing date of this application and the licensee has not received any indication of a secrecy order under 35 U.S.C. 181, the licensee may foreign file the application pursuant to 37 CFR 5.15(b).

UNITED STATES PATENT AND TRADEMARK OFFICE

Commissioner for Patents
United States Patent and Trademark Office
P.O. Box 1450
Alexandria, VA 22313-1450
www.uspto.gov

Heller Ehrman, LLP
4350 La Jolla Village Drive, 7th Floor
San Diego, CA 92122

COPY MAILED

AUG 13 2008

In re Application of	:	
Aya Jakobovits et al.	:	
Application No. 11/584,413	:	DECISION ON PETITION
Filed: October 19, 2006	:	TO WITHDRAW
Attorney Docket No. 39766-0160 R3-1C2	:	FROM RECORD
	:	

This is a decision on the Request to Withdraw as attorney or agent of record under 37 C.F.R. § 1.36(b), filed July 17, 2008.

The request is **NOT APPROVED**.

A review of the file record indicates that Leslie B. Overman and all attorneys/agents associated with customer number 25213 does not have power of attorney in this patent application. See 37 C.F.R. § 10.40. Accordingly, the request to withdraw under 37 C.F.R. § 1.36(b) is not applicable.

Customer number 25213 was requested by the applicant as a correspondence address of record.

All future communications from the Office will continue to be directed to the address above until otherwise properly notified by the applicant.

Telephone inquires concerning this decision should be directed to Kimberly Inabinet at 571-272-4618.

Kimberly Inabinet
Petitions Examiner
Office of Petitions

cc: Aya Jakovovits
3135 Hutton Drive
Beverly Hills, CA 90210

cc: Goodwin Proctor, LLP
Attn: Patent Administrator
135 Commonwealth Drive
Menlo Park, CA 94025-1105

UNITED STATES PATENT AND TRADEMARK OFFICE

COMMISSIONER FOR PATENTS
UNITED STATES PATENT AND TRADEMARK OFFICE
P.O. BOX 1450
ALEXANDRIA, VA 22313-1450
www.uspto.gov

KNOBBE MARTENS OLSON & BEAR LLP
2040 MAIN STREET
FOURTEENTH FLOOR
IRVINE, CA 92614

COPY MAILED

OCT 25 2007

OFFICE OF PETITIONS

In re Application of :
Mark W. Miles :
Application No. 11/584,425 : DECISION GRANTING PETITION
Filed: October 20, 2006 :
Attorney Docket No. IRDM.056CPC5C1/ :
IDC-0007B1 :

This is a decision in response to the petition filed July 3, 2007, requesting that the above-identified application be accorded a filing date of October 20, 2006, instead of the presently accorded date of October 21, 2006.

Petitioner alleges that the application was deposited in "Express Mail" Service with the U. S. Postal Service (USPS) on October 20, 2006. In support, petitioners provide, *inter alia*, a copy of the "Express Mail" mailing label receipt No. EV 466896990 US, showing a "Date-In" of "10 20 06." It is noted that the label also includes a USPS stamp dated "Oct 20, 2006". The same Express Mail receipt number appears on the application transmittal letter found in the file.

The Office considers the date the paper or fee is shown to have been deposited as "Express Mail" to be the "Date In" on the Express Mail label, MPEP 513. That is the date that verifies that the package was actually mailed. The evidence is convincing that the application was deposited as "Express Mail" with the USPS on October 20, 2006.

The petition is granted.

The application is being referred to the Office of Patent Application Processing (OPAP) for correction of the filing date to **October 20, 2006** and issuance of a corrected filing receipt.

Telephone inquires related to this decision should be directed to the undersigned at (571) 272-3204. Telephone inquiries related to OPAP processing should be directed to their hotline at (571) 272-4000.

Sherry D. Brinkley
Petitions Examiner
Office of Petitions

UNITED STATES PATENT AND TRADEMARK OFFICE

COMMISSIONER FOR PATENTS
UNITED STATES PATENT AND TRADEMARK OFFICE
P.O. BOX 1450
ALEXANDRIA, VA 22313-1450
www.uspto.gov

KNOBBE MARTENS OLSON & BEAR LLP
2040 MAIN STREET
FOURTEENTH FLOOR
IRVINE CA 92614

COPY MAILED

JAN 18 2008

OFFICE OF PETITIONS

Applicant: Miles
Appl. No.: 11/584,425
Filing Date: October 20, 2006
Title: Systems And Methods of Testing Micro-Electromechanical Devices
Attorney Docket No.: IRDM.056CPC5C1/IDC-0007B1
Pub. No.: US 2007/0097134 A1
Pub. Date: May 3, 2007

This is a decision on the request for a corrected patent application publication under 37 CFR 1.221(b), received on July 3, 2007, for the above-identified application.

Applicant requests that the application be republished because the patent application publication contains the contents of another application.

The request is DISMISSED as moot.

37 CFR 1.221 (b) is applicable "only when the Office makes a material mistake which is apparent from Office records.... Any request for a corrected publication or revised patent application publication other than provided as provided in paragraph (a) of this section must be filed within two months from the date of the patent application publication. This period is not extendable." A material mistake must affect the public's ability to appreciate the technical disclosure of the patent application publication, to determine the scope of the patent application publication, or to determine the scope of the provisional rights that an applicant may seek to enforce upon issuance of a patent. [1]

The application has already been scheduled for republication due to the grant of the filing date petition.

Inquiries relating to this matter may be directed to Mark Polutta at (571) 272-7709.

Mark Polutta
Senior Legal Advisor
Office of Patent Legal Administration
Office of the Deputy Commissioner
for Patent Examination Policy

[1] Changes to Implement Eighteen-Month Publication of Patent Applications, 65 FR 57023, 57038 (Sept. 20, 2000), 1239, Off. Gaz. Pat. Office Notices 63, 75 (Oct. 10, 2000) (final rule).

UNITED STATES PATENT AND TRADEMARK OFFICE

UNITED STATES DEPARTMENT OF COMMERCE
United States Patent and Trademark Office
Address: COMMISSIONER FOR PATENTS
P.O. Box 1450
Alexandria, Virginia 22313-1450
www.uspto.gov

KNOBBE, MARTENS, OLSON & BEAR, LLP
2040 MAIN STREET
FOURTEENTH FLOOR
IRVINE, CA 92614

Mail Date: 04/21/2010

Applicant	: Mark W. Miles	: DECISION ON REQUEST FOR
Patent Number	: 7619810	: RECALCULATION of PATENT
Issue Date	: 11/17/2009	: TERM ADJUSTMENT IN VIEW
Appliction No	: 11/584,425	: OF WYETH AND NOTICE OF INTENT TO
Filed	: 10/20/2006	: ISSUE CERTIFICATE OF CORRECTION
		:

The Request for Recalculation is **GRANTED** to the extent indicated.

The patent term adjustment has been determined to be **453** days. The USPTO will *sua sponte* issue a certificate of correction reflecting the amount of PTA days determined by the recalculation.

Prior to the issuance of the certificate of correction, the USPTO will afford patentee an opportunity to be heard and request reconsideration. Accordingly, patentee has **one month or thirty (30) days**, whichever is longer, to file a request for reconsideration of this patent term adjustment calculation. See 35 U.S.C. 154(b)(3)(B)(ii) and 37 CFR 1.322(a)(4). No extensions of time will be granted under 37 CFR 1.136.

Patentee should use document code PET.OP if electronically filing a request for reconsideration of this patent term adjustment calculation. The patentee must also include the information required by 37 CFR 1.705(b)(2) and the fee required by 37 CFR 1.18(e). If patentee does not file a timely request for reconsideration of this patent term adjustment calculation including the information required by 37 CFR 1.705(b)(2) and the fee required by 37 CFR 1.18(e), the USPTO will issue a certificate of correction reflecting the PTA determination noted above.

Patentee should be aware that in order to preserve the right to review in the United States District Court for the District of Columbia of the USPTO patent term adjustment determination, patentee must ensure that he or she also take the steps required under 35 U.S.C. 154(b)(4)(A) in a timely manner. Nothing in the request for recalculation should be construed as providing an alternative time frame for commencing a civil action under 35 U.S.C. 154(b)(4)(A).

Any questions concerning this decision should be directed to the Office of Patent Legal Administration at 571-272-7702.

UNITED STATES PATENT AND TRADEMARK OFFICE

Commissioner for Patents
United States Patent and Trademark Office
P.O. Box 1450
Alexandria, VA 22313-1450
www.uspto.gov

Cargill, Incorporated
Law/24
15407 McGinty Road West
Wayzata, MN 55391

COPY MAILED

APR 07 2008

OFFICE OF PETITIONS

In re Application of

Andrew J. La Follette et al.
Application No. 11/584,457
Filed: October 20, 2006
Attorney Docket No. CGL02/0179US02

DECISION ON PETITION
TO WITHDRAW
FROM RECORD

This is a decision on the Request to Withdraw as attorney or agent under 37 C.F.R. § 1.36(b) or 37 C.F.R. § 10.40 filed February 19, 2008.

The request is **NOT APPROVED**.

A review of the file record indicates that Charles G. Carter does not have power of attorney in this patent application. Accordingly, the request to withdraw under 37 C.F.R. § 1.36(b) is not applicable.

All future communications from the Office will continue to be directed to the above-listed address until otherwise properly notified by the applicant.

The request to change the correspondence of record is not acceptable as the requested correspondence address is not that of (1) the first named signing inventor; or (2) an intervening assignee of the entire interest under 37 C.F.R. 3.71. Accordingly, all correspondence will be mailed to the assignee. A courtesy copy of this decision will be mailed to the address noted on the request to withdraw. If you would like to receive future correspondence regarding this application, then the proper power of attorney documents must be submitted.

Telephone inquires concerning this decision should be directed to Kimberly Inabinet at 571-272-4618.

Kimberly Inabinet
Petitions Examiner
Office of Petitions

cc: Charles G. Carter
Foley and Lardner
777 E. Wisconsin Avenue, Ste. 3800
Milwaukee, WI 53202-530

cc: Mr. Scott Pribnow
Kagan Binder, PLLC
Maple Island Building, Ste. 200
Stillwater, MN 55082

UNITED STATES PATENT AND TRADEMARK OFFICE

UNITED STATES DEPARTMENT OF COMMERCE
United States Patent and Trademark Office
Address: COMMISSIONER FOR PATENTS
P.O. Box 1450
Alexandria, Virginia 22313-1450
www.uspto.gov

APPLICATION NO.	FILING DATE	FIRST NAMED INVENTOR	ATTORNEY DOCKET NO.	CONFIRMATION NO.
11/584,475	10/19/2006	Alexandre M. Bratkovski	200406609-1	5314

7590 04/22/2008
HEWLETT PACKARD COMPANY
P O BOX 272400, 3404 E. HARMONY ROAD
INTELLECTUAL PROPERTY ADMINISTRATION
FORT COLLINS, CO 80527-2400

EXAMINER
NGUYEN, TUAN N

ART UNIT	PAPER NUMBER
2828	

NOTIFICATION DATE	DELIVERY MODE
04/22/2008	ELECTRONIC

DECISION GRANTING PETITION UNDER 37 CFR 1.138(d)

The declaration of express abandonment is recognized

This is in response to the petition under 37 CFR 1.138(d), requesting for a refund of any previously paid search fee and excess claims fee in the above-identified application.

The petition is granted.

The express abandonment is recognized. Any previously paid search fee and excess claims fee are hereby refunded.

Telephone inquiries should be directed to the Office of Data Management at (571) 272-4200.

Patent Publication Branch
Office of Data Management

Adjustment date: 04/21/2008 DTERRY 11584475
10/24/2006 HGUTEMA1 00000064 082025
02 FC:1111 500.00 CR

FORM PET651G (Rev. 08/07)

UNITED STATES PATENT AND TRADEMARK OFFICE

UNITED STATES DEPARTMENT OF COMMERCE
United States Patent and Trademark Office
Address: COMMISSIONER FOR PATENTS
P.O. Box 1450
Alexandria, Virginia 22313-1450
www.uspto.gov

APPLICATION NO.	FILING DATE	FIRST NAMED INVENTOR	ATTORNEY DOCKET NO.	CONFIRMATION NO.
11/584,475	10/19/2006	Alexandre M. Bratkovski	200406609-1	5314

22879 7590 04/22/2008
HEWLETT PACKARD COMPANY
P O BOX 272400, 3404 E. HARMONY ROAD
INTELLECTUAL PROPERTY ADMINISTRATION
FORT COLLINS, CO 80527-2400

EXAMINER
NGUYEN, TUAN N

ART UNIT	PAPER NUMBER
2828	

NOTIFICATION DATE	DELIVERY MODE
04/22/2008	ELECTRONIC

Please find below and/or attached an Office communication concerning this application or proceeding.

The time period for reply, if any, is set in the attached communication.

Notice of the Office communication was sent electronically on above-indicated "Notification Date" to the following e-mail address(es):

JERRY.SHORMA@HP.COM
mkraft@hp.com
ipa.mail@hp.com

Notice of Abandonment	Application No.	Applicant(s)	
	11/584,475	BRATKOVSKI ET AL.	
	Examiner	Art Unit	
	KIMBERLY A. TERRELL	3651	

-- The MAILING DATE of this communication appears on the cover sheet with the correspondence address--

This application is abandoned in view of:

1. ☐ Applicant's failure to timely file a proper reply to the Office letter mailed on _____.
   (a) ☐ A reply was received on _____ (with a Certificate of Mailing or Transmission dated _____), which is after the expiration of the period for reply (including a total extension of time of _____ month(s)) which expired on _____.
   (b) ☐ A proposed reply was received on _____, but it does not constitute a proper reply under 37 CFR 1.113 (a) to the final rejection.
   (A proper reply under 37 CFR 1.113 to a final rejection consists only of: (1) a timely filed amendment which places the application in condition for allowance; (2) a timely filed Notice of Appeal (with appeal fee); or (3) a timely filed Request for Continued Examination (RCE) in compliance with 37 CFR 1.114).
   (c) ☐ A reply was received on _____ but it does not constitute a proper reply, or a bona fide attempt at a proper reply, to the non-final rejection. See 37 CFR 1.85(a) and 1.111. (See explanation in box 7 below).
   (d) ☐ No reply has been received.

2. ☐ Applicant's failure to timely pay the required issue fee and publication fee, if applicable, within the statutory period of three months from the mailing date of the Notice of Allowance (PTOL-85).
   (a) ☐ The issue fee and publication fee, if applicable, was received on _____ (with a Certificate of Mailing or Transmission dated _____), which is after the expiration of the statutory period for payment of the issue fee (and publication fee) set in the Notice of Allowance (PTOL-85).
   (b) ☐ The submitted fee of $_____ is insufficient. A balance of $_____ is due.
   The issue fee required by 37 CFR 1.18 is $_____. The publication fee, if required by 37 CFR 1.18(d), is $_____.
   (c) ☐ The issue fee and publication fee, if applicable, has not been received.

3. ☐ Applicant's failure to timely file corrected drawings as required by, and within the three-month period set in, the Notice of Allowability (PTO-37).
   (a) ☐ Proposed corrected drawings were received on _____ (with a Certificate of Mailing or Transmission dated _____), which is after the expiration of the period for reply.
   (b) ☐ No corrected drawings have been received.

4. ☒ The letter of express abandonment which is signed by the attorney or agent of record, the assignee of the entire interest, or all of the applicants.

5. ☐ The letter of express abandonment which is signed by an attorney or agent (acting in a representative capacity under 37 CFR 1.34(a)) upon the filing of a continuing application.

6. ☐ The decision by the Board of Patent Appeals and Interference rendered on _____ and because the period for seeking court review of the decision has expired and there are no allowed claims.

7. ☐ The reason(s) below:

/Kimberly Terrell/
Office of Data Management
571-272-4200

Petitions to revive under 37 CFR 1.137(a) or (b), or requests to withdraw the holding of abandonment under 37 CFR 1.181, should be promptly filed to minimize any negative effects on patent term.

UNITED STATES PATENT AND TRADEMARK OFFICE

UNITED STATES DEPARTMENT OF COMMERCE
United States Patent and Trademark Office
Address: COMMISSIONER FOR PATENTS
P.O. Box 1450
Alexandria, Virginia 22313-1450
www.uspto.gov

APPLICATION NO.	FILING DATE	FIRST NAMED INVENTOR	ATTORNEY DOCKET NO.	CONFIRMATION NO.
11/584,476	10/19/2006	R. Stanley Williams	200406608-1	5312

7590 04/22/2008
HEWLETT PACKARD COMPANY
P O BOX 272400, 3404 E. HARMONY ROAD
INTELLECTUAL PROPERTY ADMINISTRATION
FORT COLLINS, CO 80527-2400

EXAMINER
LEE, DIANE I

ART UNIT	PAPER NUMBER
2851	

NOTIFICATION DATE	DELIVERY MODE
04/22/2008	ELECTRONIC

DECISION GRANTING PETITION UNDER 37 CFR 1.138(d)

The declaration of express abandonment is recognized

This is in response to the petition under 37 CFR 1.138(d), requesting for a refund of any previously paid search fee and excess claims fee in the above-identified application.

The petition is granted.

The express abandonment is recognized. Any previously paid search fee and excess claims fee are hereby refunded.

Telephone inquiries should be directed to the Office of Data Management at (571) 272-4200.

Patent Publication Branch
Office of Data Management

Adjustment date: 04/21/2008 DTERRY 11584476
10/24/2006 HGUTEMA1 00000073 082025
02 FC:1111 500.00 CR

FORM PET651G (Rev. 08/07)

UNITED STATES PATENT AND TRADEMARK OFFICE

UNITED STATES DEPARTMENT OF COMMERCE
United States Patent and Trademark Office
Address: COMMISSIONER FOR PATENTS
P.O. Box 1450
Alexandria, Virginia 22313-1450
www.uspto.gov

APPLICATION NO.	FILING DATE	FIRST NAMED INVENTOR	ATTORNEY DOCKET NO.	CONFIRMATION NO.
11/584,476	10/19/2006	R. Stanley Williams	200406608-1	5312

22879 7590 04/22/2008
HEWLETT PACKARD COMPANY
P O BOX 272400, 3404 E. HARMONY ROAD
INTELLECTUAL PROPERTY ADMINISTRATION
FORT COLLINS, CO 80527-2400

EXAMINER
LEE, DIANE I

ART UNIT	PAPER NUMBER
2851	

NOTIFICATION DATE	DELIVERY MODE
04/22/2008	ELECTRONIC

Please find below and/or attached an Office communication concerning this application or proceeding.

The time period for reply, if any, is set in the attached communication.

Notice of the Office communication was sent electronically on above-indicated "Notification Date" to the following e-mail address(es):

JERRY.SHORMA@HP.COM
mkraft@hp.com
ipa.mail@hp.com

Notice of Abandonment	Application No.	Applicant(s)	
	11/584,476	WILLIAMS ET AL.	
	Examiner	Art Unit	
	KIMBERLY A. TERRELL	3651	

-- The MAILING DATE of this communication appears on the cover sheet with the correspondence address--

This application is abandoned in view of:

1. ☐ Applicant's failure to timely file a proper reply to the Office letter mailed on _____.
   (a) ☐ A reply was received on _____ (with a Certificate of Mailing or Transmission dated _____), which is after the expiration of the period for reply (including a total extension of time of _____ month(s)) which expired on _____.
   (b) ☐ A proposed reply was received on _____, but it does not constitute a proper reply under 37 CFR 1.113 (a) to the final rejection.
   (A proper reply under 37 CFR 1.113 to a final rejection consists only of: (1) a timely filed amendment which places the application in condition for allowance; (2) a timely filed Notice of Appeal (with appeal fee); or (3) a timely filed Request for Continued Examination (RCE) in compliance with 37 CFR 1.114).
   (c) ☐ A reply was received on _____ but it does not constitute a proper reply, or a bona fide attempt at a proper reply, to the non-final rejection. See 37 CFR 1.85(a) and 1.111. (See explanation in box 7 below).
   (d) ☐ No reply has been received.

2. ☐ Applicant's failure to timely pay the required issue fee and publication fee, if applicable, within the statutory period of three months from the mailing date of the Notice of Allowance (PTOL-85).
   (a) ☐ The issue fee and publication fee, if applicable, was received on _____ (with a Certificate of Mailing or Transmission dated _____), which is after the expiration of the statutory period for payment of the issue fee (and publication fee) set in the Notice of Allowance (PTOL-85).
   (b) ☐ The submitted fee of $_____ is insufficient. A balance of $_____ is due.
   The issue fee required by 37 CFR 1.18 is $_____. The publication fee, if required by 37 CFR 1.18(d), is $_____.
   (c) ☐ The issue fee and publication fee, if applicable, has not been received.

3. ☐ Applicant's failure to timely file corrected drawings as required by, and within the three-month period set in, the Notice of Allowability (PTO-37).
   (a) ☐ Proposed corrected drawings were received on _____ (with a Certificate of Mailing or Transmission dated _____), which is after the expiration of the period for reply.
   (b) ☐ No corrected drawings have been received.

4. ☒ The letter of express abandonment which is signed by the attorney or agent of record, the assignee of the entire interest, or all of the applicants.

5. ☐ The letter of express abandonment which is signed by an attorney or agent (acting in a representative capacity under 37 CFR 1.34(a)) upon the filing of a continuing application.

6. ☐ The decision by the Board of Patent Appeals and Interference rendered on _____ and because the period for seeking court review of the decision has expired and there are no allowed claims.

7. ☐ The reason(s) below:

/Kimberly Terrell/
Office of Data Management
571-272-4200

Petitions to revive under 37 CFR 1.137(a) or (b), or requests to withdraw the holding of abandonment under 37 CFR 1.181, should be promptly filed to minimize any negative effects on patent term.

UNITED STATES PATENT AND TRADEMARK OFFICE

Commissioner for Patents
United States Patent and Trademark Office
P.O. Box 1450
Alexandria, VA 22313-1450
www.uspto.gov

MUNCY, GEISSLER, OLDS & LOWE, PLLC
P.O. BOX 1364
FAIRFAX VA 22038-1364

COPY MAILED

SEP 21 2009

OFFICE OF PETITIONS

In re Application of	:	
KATZENBERGER, Oliver et al.	:	
Application No. 11/584,512	:	DECISION ON PETITION
Filed: October 23, 2006	:	TO WITHDRAW
Attorney Docket No. **1005/0101PUS1**	:	FROM RECORD
	:	

This is a decision on the Request to Withdraw as attorney or agent of record under 37 C.F.R. § 1.36(b), filed September 03, 2009.

The request is **APPROVED**.

A grantable request to withdraw as attorney/agent of record must be signed by every attorney/agent seeking to withdraw or contain a clear indication that one attorney is signing on behalf of another/others. The Office requires the practitioner(s) requesting withdrawal to certify that he, she, or they have: (1) given reasonable notice to the client, prior to the expiration of the response period, that the practitioner(s) intends to withdraw from employment; (2) delivered to the client or a duly authorized representative of the client all papers and property (including funds) to which the client is entitled; and (3) notified the client of any responses that may be due and the time frame within which the client must respond, pursuant 37 CFR 10.40(c).

The request was signed by Martin Geissler on behalf of all attorneys of record who are associated with customer No. 60601. All attorneys/agents associated with the Customer Number 60601 have been withdrawn. Applicant is reminded that there is no attorney of record at this time.

The request to change the correspondence address of record is not acceptable as the requested correspondence address is not that of: (1) the first named signing inventor; or (2) an intervening assignee of the entire interest under 37 C.F.R 3.71. All future communications from the Office will be directed to the first named signing inventor at the first copied address below until otherwise properly notified by the applicant.

Telephone inquiries concerning this decision should be directed to Tredelle Jackson at 571-272-2783.

Tredelle D. Jackson
Paralegal Specialist
Office of Petitions

cc: **OLIVER KATZENBERGER**
JAHNSTRASSE 14
BURGLAUER D-97724
GERMANY

cc: **PREH GMBH**
ANDER STADTHALLE
BAD NEUSTADT D-97616
GERMANY

UNITED STATES PATENT AND TRADEMARK OFFICE

MAILED

AUG 10 2007

TECHNOLOGY CENTER 2100

Commissioner for Patents
United States Patent and Trademark Office
P.O. Box 1450
Alexandria, VA 22313-1450
www.uspto.gov

Richard V. Burgujian
FINNEGAN, HENDERSON, FARABOW, GARRETT & DUNNER LLP
901 NEW YORK AVENUE, NW
WASHINGTON, DC 20001-4413

In re Application of: KIKUCHI et al.
Application No. 11/584,548
Filed: October 23, 2006
For: CODING SYSTEM AND DECODING SYSTEM

DECISION ON REQUEST TO PARTICIPATE IN PATENT PROSECUTION HIGHWAY PILOT PROGRAM AND PETITION TO MAKE SPECIAL UNDER 37 CFR 1.102(d)

This is a decision on the request to participate in the Patent Prosecution Highway (PPH) pilot program and the petition under 37 CFR 1.102(d), filed June 29, 2007, to make the above-identified application special.

The request and petition are **GRANTED**.

A grantable request to participate in the PPH pilot program and petition to make special require:

(1) The U.S. application must validly claim priority under 35 U.S.C. 119(a) to one or more applications filed in the JPO;

(2) Applicant must submit a copy of the allowable/patentable claim(s) from the JPO application(s) along with an English translation thereof and a statement that the English translation is accurate;

(3) All the claims in the U.S. application must sufficiently correspond or be amended to sufficiently correspond to the allowable/patentable claim(s) in the JPO application(s);

(4) Examination of the U.S. application has not begun;

(5) Applicant must submit a copy of all the office actions from each of the JPO application(s) containing the allowable/patentable claim(s) along with an English translation thereof and a statement that the English translation is accurate;

(6) Applicant must submit an IDS listing the documents cited by the JPO examiner in the JPO office action along with copies of documents except U.S. patents or U.S. patent application publications; and

(7) The required petition fee under 37 CFR 1.17(h).

The request to participate in the PPH pilot program and petition comply with the above requirements. Accordingly, the above-identified application has been accorded "special" status.

Telephone inquiries concerning this decision should be directed to Mano Padmanabhan at 571-272-4210.

All other inquiries concerning the examination or status of the application is accessible in the PAIR system at http://www.uspto.gov/ebc/index.html.

The application is being forwarded to the examiner for action on the merits commensurate with this decision.

Mano Padmanabhan
Quality Assurance Specialist, Technology Center 2100, Workgroup 2180
571-272-4210

UNITED STATES PATENT AND TRADEMARK OFFICE

MAILED

AUG 10 2007

TECHNOLOGY CENTER 2100

Commissioner for Patents
United States Patent and Trademark Office
P.O. Box 1450
Alexandria, VA 22313-1450
www.uspto.gov

Richard V. Burgujian
FINNEGAN, HENDERSON, FARABOW, GARRETT & DUNNER LLP
901 NEW YORK AVENUE, NW
WASHINGTON, DC 20001-4413

In re Application of: KIKUCHI et al.
Application No. 11/584,557
Filed: October 23, 2006
For: CODING SYSTEM AND DECODING SYSTEM

DECISION ON REQUEST TO PARTICIPATE IN PATENT PROSECUTION HIGHWAY PILOT PROGRAM AND PETITION TO MAKE SPECIAL UNDER 37 CFR 1.102(d)

This is a decision on the request to participate in the Patent Prosecution Highway (PPH) pilot program and the petition under 37 CFR 1.102(d), filed June 29, 2007, to make the above-identified application special.

The petition is **GRANTED**.

A grantable request to participate in the PPH pilot program and petition to make special require:

(1) The U.S. application must validly claim priority under 35 U.S.C. 119(a) to one or more applications filed in the JPO;

(2) Applicant must submit a copy of the allowable/patentable claim(s) from the JPO application(s) along with an English translation thereof and a statement that the English translation is accurate;

(3) All the claims in the U.S. application must sufficiently correspond or be amended to sufficiently correspond to the allowable/patentable claim(s) in the JPO application(s);

(4) Examination of the U.S. application has not begun;

(5) Applicant must submit a copy of all the office actions from each of the JPO application(s) containing the allowable/patentable claim(s) along with an English translation thereof and a statement that the English translation is accurate;

(6) Applicant must submit an IDS listing the documents cited by the JPO examiner in the JPO office action along with copies of documents except U.S. patents or U.S. patent application publications; and

(7) The required petition fee under 37 CFR 1.17(h).

The request to participate in the PPH pilot program and petition comply with the above requirements. Accordingly, the above-identified application has been accorded "special" status.

Telephone inquiries concerning this decision should be directed to Mano Padmanabhan at 571-272-4210.

All other inquiries concerning the examination or status of the application is accessible in the PAIR system at http://www.uspto.gov/ebc/index.html.

The application is being forwarded to the examiner for action on the merits commensurate with this decision.

Mano Padmanabhan

Mano Padmanabhan
Quality Assurance Specialist, Technology Center 2100, Workgroup 2180
571-272-4210

UNITED STATES PATENT AND TRADEMARK OFFICE

MAILED

AUG 10 2007

TECHNOLOGY CENTER 2100

Commissioner for Patents
United States Patent and Trademark Office
P.O. Box 1450
Alexandria, VA 22313-1450
www.uspto.gov

Richard V. Burgujian
FINNEGAN, HENDERSON, FARABOW, GARRETT & DUNNER LLP
901 NEW YORK AVENUE, NW
WASHINGTON, DC 20001-4413

In re Application of: KIKUCHI et al.
Application No. 11/584,558
Filed: October 23, 2006
For: CODING SYSTEM AND DECODING SYSTEM

DECISION ON REQUEST TO PARTICIPATE IN PATENT PROSECUTION HIGHWAY PILOT PROGRAM AND PETITION TO MAKE SPECIAL UNDER 37 CFR 1.102(d)

This is a decision on the request to participate in the Patent Prosecution Highway (PPH) pilot program and the petition under 37 CFR 1.102(d), filed June 29, 2007, to make the above-identified application special.

The petition is **DISMISSED**.

A grantable request to participate in the PPH pilot program and petition to make special require:

(1) The U.S. application must validly claim priority under 35 U.S.C. 119(a) to one or more applications filed in the JPO;

(2) Applicant must submit a copy of the allowable/patentable claim(s) from the JPO application(s) along with an English translation thereof and a statement that the English translation is accurate;

(3) All the claims in the U.S. application must sufficiently correspond or be amended to sufficiently correspond to the allowable/patentable claim(s) in the JPO application(s);

(4) Examination of the U.S. application has not begun;

(5) Applicant must submit a copy of all the office actions from each of the JPO application(s) containing the allowable/patentable claim(s) along with an English translation thereof and a statement that the English translation is accurate;

(6) Applicant must submit an IDS listing the documents cited by the JPO examiner in the JPO office action along with copies of documents except U.S. patents or U.S. patent application publications; and

(7) The required petition fee under 37 CFR 1.17(h).

The request to participate in the PPH pilot program and petition fail to include:

A. Item 3 above. Specifically,

1) Claim 33 in the pre-amendment filed 06/28/2007 in the US application, recites "detecting a synchronization code at a plurality of synchronization code inserting positions periodically predetermined in an input code string, the input code string including a multiplexed code string obtained by multiplexing a plurality of variable length code strings and, stuffing bit of which the longest bit length is 8 bits, ***the variable length code being generated by compressing and coding an image signal;"*** in the last line of the first element of the claim. The corresponding limitation in the corresponding claim 1 of the Japanese application recites "detecting a synchronization code at a plurality of synchronization code inserting positions periodically predetermined in an input code string, the input code string including a multiplexed code string obtained by multiplexing a plurality of variable length code strings ***each having a code capable of being decoded in forward and backward directions...;***". Therefore claim 33 does not substantially correspond to the same limitation in claim 1 in the "Decision to Grant a Patent" of the JPO application.

2) Claim 34 in the pre-amendment filed 06/28/2007 in the US application, recites "
a synchronization code detector configured to detect a synchronization code at a plurality of synchronization code inserting positions periodically predetermined in an input code string, the input code string including a multiplexed code string obtained by multiplexing a plurality of variable length code strings and a stuffing bit of which the longest bit length is 8 bits, ***the variable length code being generated by compressing and coding an image signal;"*** in the last line of the first element of the claim. The corresponding limitation in the corresponding claim 2 of the Japanese application recites "a synchronization code detector configured to detect a synchronization code at a plurality of synchronization code inserting positions periodically predetermined in an input code string, the input code string including a multiplexed code string obtained by multiplexing a plurality of variable length code strings ***each having a code capable of being decoded in forward and backward directions...;***". Therefore claim 34 does not substantially correspond to the same limitation in claim 2 in the "Decision to Grant a Patent" of the JPO application.

Applicant is requested to review the claims in view of the comments above to make sure that the claims are in compliance with guidelines set forth above for a grantable petition to make special.

The Petition is **DISMISSED**.

Applicant is given a time period of ONE MONTH or THIRTY DAYS, whichever is longer, to correct the deficiencies. NO EXTENSION OF TIME UNDER 37 CFR 1.136 IS PERMITTED.

If the deficiencies are not corrected with the time period given, the application will await action in its regular turn.

Response must be faxed to Mano Padmanabhan at 571-273-4210 (RightFax) or 571-273-0308.

Telephone inquiries concerning this decision should be directed to Mano Padmanabhan at 571-272-4210.

All other inquiries concerning the examination or status of the application should be directed to Patent Application Information Retrieval (PAIR) system.

Mano Padmanabhan
Quality Assurance Specialist, Technology Center 2100, Workgroup 2180
571-272-4210

UNITED STATES PATENT AND TRADEMARK OFFICE

Commissioner for Patents
United States Patent and Trademark Office
P.O. Box 1450
Alexandria, VA 22313-1450
www.uspto.gov

MAILED

SEP 28 2007

TECHNOLOGY CENTER 2100

Richard V. Burgujian
FINNEGAN, HENDERSON, FARABOW, GARRETT & DUNNER LLP
901 NEW YORK AVENUE, NW
WASHINGTON, DC 20001-4413

In re Application of: KIKUCHI et al.
Application No. 11/584,558
Filed: October 23, 2006
For: CODING SYSTEM AND DECODING SYSTEM

DECISION ON REQUEST TO PARTICIPATE IN PATENT PROSECUTION HIGHWAY PILOT PROGRAM AND PETITION TO MAKE SPECIAL UNDER 37 CFR 1.102(d)

This is a decision on the request to participate in the Patent Prosecution Highway (PPH) pilot program and the petition under 37 CFR 1.102(d), filed June 29, 2007, and the request for reconsideration of adverse decision filed September 06, 2007, to make the above-identified application special.

The request and petition are **GRANTED**.

A grantable request to participate in the PPH pilot program and petition to make special require:

(1) The U.S. application must validly claim priority under 35 U.S.C. 119(a) to one or more applications filed in the JPO;

(2) Applicant must submit a copy of the allowable/patentable claim(s) from the JPO application(s) along with an English translation thereof and a statement that the English translation is accurate;

(3) All the claims in the U.S. application must sufficiently correspond or be amended to sufficiently correspond to the allowable/patentable claim(s) in the JPO application(s);

(4) Examination of the U.S. application has not begun;

(5) Applicant must submit a copy of all the office actions from each of the JPO

application(s) containing the allowable/patentable claim(s) along with an English translation thereof and a statement that the English translation is accurate;

(6) Applicant must submit an IDS listing the documents cited by the JPO examiner in the JPO office action along with copies of documents except U.S. patents or U.S. patent application publications; and

(7) The required petition fee under 37 CFR 1.17(h).

In response to the petition decision mailed on August 10, 2007, applicant submitted a second set of translation of the Japanese claims, including a certification for accuracy of the translation, and a statement that the new set of translated claims corresponded more closely in form to the allowed Japanese claims. The same translator (person) provided both sets of translations, and the translator has provided a certificate of accuracy for both translations. In a telephone conversation with the attorney for applicant, the attorney explained to the undersigned that the differences between the two translations were due to the nuances of the Japanese language, and while both sets were accurate translations, the second one was in better correspondence with the allowed Japanese claims. Accordingly, the request to participate in the PPH pilot program and petition comply with the above requirements, and the above-identified application has been accorded "special" status.

The request and petition are **GRANTED**.

Telephone inquiries concerning this decision should be directed to Mano Padmanabhan at 571-272-4210.

All other inquiries concerning the examination or status of the application is accessible in the PAIR system at http://www.uspto.gov/ebc/index.html.

The application is being forwarded to the examiner for action on the merits commensurate with this decision.

Mano Padmanabhan

Mano Padmanabhan
Quality Assurance Specialist, Technology Center 2100, Workgroup 2180
571-272-4210

UNITED STATES PATENT AND TRADEMARK OFFICE

UNITED STATES DEPARTMENT OF COMMERCE
United States Patent and Trademark Office
Address: COMMISSIONER FOR PATENTS
P.O. Box 1450
Alexandria, Virginia 22313-1450
www.uspto.gov

MCDERMOTT WILL & EMERY LLP
600 13TH STREET, NW
WASHINGTON, DC 20005-3096

Mail Date: 05/03/2010

Applicant	: Tomoko Komatsu	: DECISION ON REQUEST FOR
Patent Number	: 7619678	: RECALCULATION of PATENT
Issue Date	: 11/17/2009	: TERM ADJUSTMENT IN VIEW
Application No	: 11/584,560	: OF WYETH AND NOTICE OF INTENT TO
Filed	: 10/23/2006	: ISSUE CERTIFICATE OF CORRECTION
		:

The Request for Recalculation is **GRANTED** to the extent indicated.

The patent term adjustment has been determined to be **426** days. The USPTO will *sua sponte* issue a certificate of correction reflecting the amount of PTA days determined by the recalculation.

Prior to the issuance of the certificate of correction, the USPTO will afford patentee an opportunity to be heard and request reconsideration. Accordingly, patentee has **one month or thirty (30) days**, whichever is longer, to file a request for reconsideration of this patent term adjustment calculation. See 35 U.S.C. 154(b)(3)(B)(ii) and 37 CFR 1.322(a)(4). No extensions of time will be granted under 37 CFR 1.136.

Patentee should use document code PET.OP if electronically filing a request for reconsideration of this patent term adjustment calculation. The patentee must also include the information required by 37 CFR 1.705(b)(2) and the fee required by 37 CFR 1.18(e). If patentee does not file a timely request for reconsideration of this patent term adjustment calculation including the information required by 37 CFR 1.705(b)(2) and the fee required by 37 CFR 1.18(e), the USPTO will issue a certificate of correction reflecting the PTA determination noted above.

Patentee should be aware that in order to preserve the right to review in the United States District Court for the District of Columbia of the USPTO patent term adjustment determination, patentee must ensure that he or she also take the steps required under 35 U.S.C. 154(b)(4)(A) in a timely manner. Nothing in the request for recalculation should be construed as providing an alternative time frame for commencing a civil action under 35 U.S.C. 154(b)(4)(A).

Any questions concerning this decision should be directed to the Office of Patent Legal Administration at 571-272-7702.

UNITED STATES PATENT AND TRADEMARK OFFICE

UNITED STATES DEPARTMENT OF COMMERCE
United States Patent and Trademark Office
Address: COMMISSIONER FOR PATENTS
P.O. Box 1450
Alexandria, Virginia 22313-1450
www.uspto.gov

APPLICATION NO.	FILING DATE	FIRST NAMED INVENTOR	ATTORNEY DOCKET NO.	CONFIRMATION NO.
11/584,563	10/23/2006	Seung-deog An	52166	6055

7590 01/30/2009
ROYLANCE, ABRAMS, BERDO & GOODMAN, L.L.P.
1300 19TH STREET, N.W.
SUITE 600
WASHINGTON,, DC 20036

EXAMINER
ROYER, WILLIAM J

ART UNIT	PAPER NUMBER
2852	

MAIL DATE	DELIVERY MODE
01/30/2009	PAPER

DECISION GRANTING PETITION UNDER 37 CFR 1.138(d)

The declaration of express abandonment is recognized

This is in response to the petition under 37 CFR 1.138(d), requesting for a refund of any previously paid search fee and excess claims fee in the above-identified application.

The petition is granted.

The express abandonment is recognized. Any previously paid search fee and excess claims fee are hereby refunded.

Telephone inquiries should be directed to the Office of Data Management at (571) 272-4200.

Nimi Farmer

Patent Publication Branch
Office of Data Management

Refund Ref:
02/04/2009 NFARMER 0000166007

CHECK Refund Total: $500.00

Adjustment date: 02/04/2009 NFARMER
10/24/2006 SSITHIB1 00000088 11584563
03 FC:1111 -500.00 OP

FORM PET651G (Rev. 08/07)

UNITED STATES PATENT AND TRADEMARK OFFICE

Commissioner for Patents
United States Patent and Trademark Office
P.O. Box 1450
Alexandria, VA 22313-1450
www.uspto.gov

NORRIS, BRADEN, MELTON
& GREGERSEN, PLLC
SUITE 305
1901 PENNSYLVANIA AVENUE
WASHINGTON DC 20006

MAILED

JAN 14 2010

OFFICE OF PETITIONS

In re Application of	:	
Moeub LANH, et al	:	
Application No. 11/584,577	:	DECISION ON PETITION
Filed: October 23, 2006	:	
Attorney Docket No. ML001	:	

This is a decision on the petition under the unintentional provisions of 37 CFR 1.137(b), filed November 23, 2009, to revive the above-identified application.

The petition is **GRANTED**.

The application became abandoned for failure to timely pay the issue and publication fees on or before March 16, 2009. As required by the Notice of Allowance and Fee(s) Due, mailed December 16, 2008, which set a statutory period for reply of three (3) months. Accordingly, the application became abandoned on March 17, 2009.

The petition satisfies the requirements of 37 CFR 1.137(b) in that petitioner has supplied (1) the reply in the form of payment of the Issue Fee of $755 and Publication Fee of $300; (2) the petition fee of $810; and (3) and the required statement of unintentional delay.

Telephone inquiries concerning this decision should be directed to the undersigned at (571) 272-6735.

The application is being referred to the Office of Data Management for processing into a patent. .

/DCG/
Diane C. Goodwyn
Petitions Examiner
Office of Petitions

UNITED STATES PATENT AND TRADEMARK OFFICE

MAILED

AUG 10 2007

TECHNOLOGY CENTER 2100

Commissioner for Patents
United States Patent and Trademark Office
P.O. Box 1450
Alexandria, VA 22313-1450
www.uspto.gov

Richard V. Burgujian
FINNEGAN, HENDERSON, FARABOW, GARRETT & DUNNER LLP
901 NEW YORK AVENUE, NW
WASHINGTON, DC 20001-4413

In re Application of: KIKUCHI et al.
Application No. 11/584,583
Filed: October 23, 2006
For: CODING SYSTEM AND DECODING SYSTEM

DECISION ON REQUEST TO PARTICIPATE IN PATENT PROSECUTION HIGHWAY PILOT PROGRAM AND PETITION TO MAKE SPECIAL UNDER 37 CFR 1.102(d)

This is a decision on the request to participate in the Patent Prosecution Highway (PPH) pilot program and the petition under 37 CFR 1.102(d), filed June 29, 2007, to make the above-identified application special.

The petition is **GRANTED**.

A grantable request to participate in the PPH pilot program and petition to make special require:

(1) The U.S. application must validly claim priority under 35 U.S.C. 119(a) to one or more applications filed in the JPO;

(2) Applicant must submit a copy of the allowable/patentable claim(s) from the JPO application(s) along with an English translation thereof and a statement that the English translation is accurate;

(3) All the claims in the U.S. application must sufficiently correspond or be amended to sufficiently correspond to the allowable/patentable claim(s) in the JPO application(s);

(4) Examination of the U.S. application has not begun;

(5) Applicant must submit a copy of all the office actions from each of the JPO application(s) containing the allowable/patentable claim(s) along with an English translation thereof and a statement that the English translation is accurate;

(6) Applicant must submit an IDS listing the documents cited by the JPO examiner in the JPO office action along with copies of documents except U.S. patents or U.S. patent application publications; and

(7) The required petition fee under 37 CFR 1.17(h).

The request to participate in the PPH pilot program and petition comply with the above requirements. Accordingly, the above-identified application has been accorded "special" status.

Telephone inquiries concerning this decision should be directed to Mano Padmanabhan at 571-272-4210.

All other inquiries concerning the examination or status of the application is accessible in the PAIR system at http://www.uspto.gov/ebc/index.html.

The application is being forwarded to the examiner for action on the merits commensurate with this decision.

Mano Padmanabhan

Mano Padmanabhan
Quality Assurance Specialist, Technology Center 2100, Workgroup 2180
571-272-4210

UNITED STATES PATENT AND TRADEMARK OFFICE

Commissioner for Patents
United States Patent and Trademark Office
P.O. Box 1450
Alexandria, VA 22313-1450
www.uspto.gov

MAILED

AUG 10 2007

TECHNOLOGY CENTER 2100

Richard V. Burgujian
FINNEGAN, HENDERSON, FARABOW, GARRETT & DUNNER LLP
901 NEW YORK AVENUE, NW
WASHINGTON, DC 20001-4413

In re Application of: KIKUCHI et al.
Application No. 11/584,584
Filed: October 23, 2006
For: CODING SYSTEM AND DECODING SYSTEM

DECISION ON REQUEST TO PARTICIPATE IN PATENT PROSECUTION HIGHWAY PILOT PROGRAM AND PETITION TO MAKE SPECIAL UNDER 37 CFR 1.102(d)

This is a decision on the request to participate in the Patent Prosecution Highway (PPH) pilot program and the petition under 37 CFR 1.102(d), filed June 29, 2007, to make the above-identified application special.

The petition is **DISMISSED**.

A grantable request to participate in the PPH pilot program and petition to make special require:

(1) The U.S. application must validly claim priority under 35 U.S.C. 119(a) to one or more applications filed in the JPO;

(2) Applicant must submit a copy of the allowable/patentable claim(s) from the JPO application(s) along with an English translation thereof and a statement that the English translation is accurate;

(3) All the claims in the U.S. application must sufficiently correspond or be amended to sufficiently correspond to the allowable/patentable claim(s) in the JPO application(s);

(4) Examination of the U.S. application has not begun;

(5) Applicant must submit a copy of all the office actions from each of the JPO application(s) containing the allowable/patentable claim(s) along with an English translation thereof and a statement that the English translation is accurate;

(6) Applicant must submit an IDS listing the documents cited by the JPO examiner in the JPO office action along with copies of documents except U.S. patents or U.S. patent application publications; and

(7) The required petition fee under 37 CFR 1.17(h).

The request to participate in the PPH pilot program and petition fail to include:

A. Item 3 above. Specifically,

1) Claim 33 in the pre-amendment filed 06/28/2007 in the US application, recites "the input code string comprising a stuffing bit having a bit length ***equal to*** ***<u>or less than</u>*** a period of the plurality of synchronization code inserting positions;" in the last line of the first element of the claim. The corresponding limitation in the corresponding claim 1 of the Japanese application only recites "***equal to*** a period ....". Therefore claim 33 does not substantially correspond to the same limitation in claim 1 in the "Decision to Grant a Patent" of the JPO application.

2) Claim 35 in the pre-amendment filed 06/28/2007 in the US application, recites "the input code string comprising a stuffing bit having a bit length ***equal to*** ***<u>or less than</u>*** a period of the plurality of synchronization code inserting positions;" in the last line of the first element of the claim. The corresponding limitation in the corresponding claim 1 of the Japanese application only recites "***equal to a cycle*** of the plurality of synchronization code inserting positions;". Therefore claim 35 does not substantially correspond to the same limitation in claim 2 in the "Decision to Grant a Patent" of the JPO application.

Applicant is requested to review the claims in view of the comments above to make sure that the claims are in compliance with guidelines set forth above for a grantable petition to make special.

The Petition is **<u>DISMISSED</u>**.

Applicant is given a time period of ONE MONTH or THIRTY DAYS, whichever is longer, to correct the deficiencies. NO EXTENSION OF TIME UNDER 37 CFR 1.136 IS PERMITTED.

If the deficiencies are not corrected with the time period given, the application will await action in its regular turn.

Response must be faxed to Mano Padmanabhan at 571-273-4210 (RightFax) or 571-273-0308.

Telephone inquiries concerning this decision should be directed to Mano Padmanabhan at 571-272-4210.

All other inquiries concerning the examination or status of the application should be directed to Patent Application Information Retrieval (PAIR) system.

Mano Padmanabhan

Mano Padmanabhan
Quality Assurance Specialist, Technology Center 2100, Workgroup 2180
571-272-4210

UNITED STATES PATENT AND TRADEMARK OFFICE

MAILED

SEP 28 2007

TECHNOLOGY CENTER 2100

Commissioner for Patents
United States Patent and Trademark Office
P.O. Box 1450
Alexandria, VA 22313-1450
www.uspto.gov

Richard V. Burgujian
FINNEGAN, HENDERSON, FARABOW, GARRETT & DUNNER LLP
901 NEW YORK AVENUE, NW
WASHINGTON, DC 20001-4413

In re Application of: KIKUCHI et al.
Application No. 11/584,584
Filed: October 23, 2006
For: CODING SYSTEM AND DECODING SYSTEM

DECISION ON REQUEST TO PARTICIPATE IN PATENT PROSECUTION HIGHWAY PILOT PROGRAM AND PETITION TO MAKE SPECIAL UNDER 37 CFR 1.102(d)

This is a decision on the request to participate in the Patent Prosecution Highway (PPH) pilot program and the petition under 37 CFR 1.102(d), filed June 29, 2007, and the request for reconsideration of adverse decision filed September 06, 2007, to make the above-identified application special.

The request and petition are **GRANTED**.

A grantable request to participate in the PPH pilot program and petition to make special require:

(1) The U.S. application must validly claim priority under 35 U.S.C. 119(a) to one or more applications filed in the JPO;

(2) Applicant must submit a copy of the allowable/patentable claim(s) from the JPO application(s) along with an English translation thereof and a statement that the English translation is accurate;

(3) All the claims in the U.S. application must sufficiently correspond or be amended to sufficiently correspond to the allowable/patentable claim(s) in the JPO application(s);

(4) Examination of the U.S. application has not begun;

(5) Applicant must submit a copy of all the office actions from each of the JPO

application(s) containing the allowable/patentable claim(s) along with an English translation thereof and a statement that the English translation is accurate;

(6) Applicant must submit an IDS listing the documents cited by the JPO examiner in the JPO office action along with copies of documents except U.S. patents or U.S. patent application publications; and

(7) The required petition fee under 37 CFR 1.17(h).

In response to the petition decision mailed on August 10, 2007, applicant submitted a second set of translation of the Japanese claims, including a certification for accuracy of the translation, and a statement that the new set of translated claims corresponded more closely in form to the allowed Japanese claims. The same translator (person) provided both sets of translations, and the translator has provided a certificate of accuracy for both translations. In a telephone conversation with the attorney for applicant, the attorney explained to the undersigned that the differences between the two translations were due to the nuances of the Japanese language, and while both sets were accurate translations, the second one was in better correspondence with the allowed Japanese claims. Accordingly, the request to participate in the PPH pilot program and petition comply with the above requirements, and the above-identified application has been accorded "special" status.

The request and petition are **GRANTED**.

Telephone inquiries concerning this decision should be directed to Mano Padmanabhan at 571-272-4210.

All other inquiries concerning the examination or status of the application is accessible in the PAIR system at http://www.uspto.gov/ebc/index.html.

The application is being forwarded to the examiner for action on the merits commensurate with this decision.

Mano Padmanabhan

Mano Padmanabhan
Quality Assurance Specialist, Technology Center 2100, Workgroup 2180
571-272-4210

UNITED STATES PATENT AND TRADEMARK OFFICE

Commissioner for Patents
United States Patent and Trademark Office
P.O. Box 1450
Alexandria, VA 22313-1450
www.uspto.gov

APR 30 2010

RADER FISHMAN & GRAUER PLLC
LION BUILDING
1233 20TH STREET N.W., SUITE 501
WASHINGTON DC 20036

In re Application of YUJI SHISHIDO et al. Appl. No. 11/584,606 Filed: October 23, 2006 For: **BEARING UNIT AND ROTARY DRIVE USING THE SAME**	DECISION ON PETITION TO WITHDRAW RESTRICTION REQUIREMENT AND FINALITY OF ACTION UNDER 37 CFR 1.181

This is a decision on applicant's petition under 37 CFR 1.181 filed on July 28, 2008 to withdraw the finality of the Office action of July 9, 2008, and a second petition under 37 CFR 1.144 filed on April 29, 2009 to review and withdraw the restriction requirement of February 26, 2008, and an additional species election requirement made on February 17, 2009.

The petitions are **DISMISSED** as moot.

Applicants allege that the final rejection mailed on July 9, 2008 was premature because a new ground of rejection on claim 9 was not necessitated by applicants' amendment. Applicants allege that the restriction requirement was improper because there is no serious burden on the examiner to examine the entire application as the restricted claims 9-22 have been searched and examined prior to the restriction, and the search for the various species would have overlapped. The examiner failed to show how the newly added claims 23-33 are independent and distinct from the previously examined claims 9-22. Applicants further allege that the restriction requirement was incomplete because claims 23-33 were not included in the restriction.

A review of the record indicates that a non-final Office action was mailed on August 31, 2007 in which claims 9-11, 13, and 16-18 were rejected under 102(b) over a Japanese patent publication JP(07-208457). Claims 9-22 were also rejected under 103(a) over Tamaoka et al. (US patent 7,005,768). Applicant filed a response on November 20, 2007 amending claims 9, 10, 16, canceling claims 14 and 17-22, and adding new claims 23-33, and arguments traversing the rejections.

The examiner mailed a restriction requirement on February 26, 2008 restricting between Group I of claims 9-13 and 15, and Group II of claims 16 and 23, and a further species election requirement of various drawing figures. Applicants submitted a response on March 21, 2008 in which applicants elected with traverse the invention of Group I and the species of figure 10, wherein claims 9-13 and 15 are readable thereon.

The examiner issued a final Office action on July 9, 2008 in which the examiner considered applicants' traversal of the restriction requirement and made the requirement final. The examiner rejected claims 9, 11-12 and 16 under 103(a) over Ichiyama (US patent 6,361,214) in view of Japanese patent publication (07-208457); claims 23-25, 29-30 and 33 were rejected under 102(b) over the Admitted prior art of figure 3; claims 10-15 were rejected under 103(a) over Ichiyama in view of the Japanese publication '457 and the Admitted prior art of figure 1. The examiner also rejected claims 27-28 under 103(a) over the Admitted prior art of figure 3 in view of the Japanese publication '457, and claim 26 under 103(a) over the Admitted prior art of figure 3 in view of the admitted prior art of figure 1.

Applicants filed an amendment after final on August 7, 2008. The examiner issued an Advisory action on September 8, 2008. Applicants then filed a Notice of appeal and a Pre-appeal conference request on October 3, 2008. The examiner issued a second final Office action on February 17, 2009 in which the finality of the Office action dated July 9, 2008 was reconsidered and withdrawn, and the amendment after final dated August 7, 2008 was entered to cancel claims 9-13, 15 and 29; and amend claims 23, 26-28, 30-33; and add new claims 34-40. The issue of premature finality of the Office action dated July 9, 2008 was rendered moot by the applicants' cancellation of claims 9-13, 15 and 29, and the examiner's Office action of February 17, 2009. Therefore, the petition of July 28, 2008 is dismissed.

Following the final Office action of February 17, 2009, applicant filed an amendment after final on March 26, 2009. The examiner issued an Advisory action on April 20, 2009. Subsequently, applicant filed a Notice of appeal and a Pre-appeal conference request on May 13, 2009, then an appeal brief on August 14, 2009. The restriction requirement dated February 26, 2008 were reconsidered and withdrawn, and the application was allowed on April 12, 2010 and has passed to issue. The issues of improper restriction requirement were rendered moot by the Notice of allowance dated April 12, 2010. The petition dated April 29, 2009 is dismissed.

Any questions regarding this decision should be directed to Supervisory Patent Examiner Richard Ridley at 571-272-6917.

David Talbott, Director
Technology Center 3600
571-272-5150

LM
rr/lm: 4/19/10

UNITED STATES PATENT AND TRADEMARK OFFICE

MAILED

AUG 10 2007

TECHNOLOGY CENTER 2100

Commissioner for Patents
United States Patent and Trademark Office
P.O. Box 1450
Alexandria, VA 22313-1450
www.uspto.gov

Richard V. Burgujian
FINNEGAN, HENDERSON, FARABOW, GARRETT & DUNNER LLP
901 NEW YORK AVENUE, NW
WASHINGTON, DC 20001-4413

In re Application of: KIKUCHI et al.
Application No. 11/584,614
Filed: October 23, 2006
For: CODING SYSTEM AND DECODING SYSTEM

DECISION ON REQUEST TO PARTICIPATE IN PATENT PROSECUTION HIGHWAY PILOT PROGRAM AND PETITION TO MAKE SPECIAL UNDER 37 CFR 1.102(d)

This is a decision on the request to participate in the Patent Prosecution Highway (PPH) pilot program and the petition under 37 CFR 1.102(d), filed June 29, 2007, to make the above-identified application special.

The petition is **GRANTED**.

A grantable request to participate in the PPH pilot program and petition to make special require:

(1) The U.S. application must validly claim priority under 35 U.S.C. 119(a) to one or more applications filed in the JPO;

(2) Applicant must submit a copy of the allowable/patentable claim(s) from the JPO application(s) along with an English translation thereof and a statement that the English translation is accurate;

(3) All the claims in the U.S. application must sufficiently correspond or be amended to sufficiently correspond to the allowable/patentable claim(s) in the JPO application(s);

(4) Examination of the U.S. application has not begun;

(5) Applicant must submit a copy of all the office actions from each of the JPO application(s) containing the allowable/patentable claim(s) along with an English translation thereof and a statement that the English translation is accurate;

(6) Applicant must submit an IDS listing the documents cited by the JPO examiner in the JPO office action along with copies of documents except U.S. patents or U.S. patent application publications; and

(7) The required petition fee under 37 CFR 1.17(h).

The request to participate in the PPH pilot program and petition comply with the above requirements. Accordingly, the above-identified application has been accorded "special" status.

Telephone inquiries concerning this decision should be directed to Mano Padmanabhan at 571-272-4210.

All other inquiries concerning the examination or status of the application is accessible in the PAIR system at http://www.uspto.gov/ebc/index.html.

The application is being forwarded to the examiner for action on the merits commensurate with this decision.

Mano Padmanabhan

Mano Padmanabhan
Quality Assurance Specialist, Technology Center 2100, Workgroup 2180
571-272-4210

UNITED STATES PATENT AND TRADEMARK OFFICE

UNITED STATES DEPARTMENT OF COMMERCE
United States Patent and Trademark Office
Address: COMMISSIONER FOR PATENTS
P.O. Box 1450
Alexandria, Virginia 22313-1450
www.uspto.gov

APPLICATION NO.	FILING DATE	FIRST NAMED INVENTOR	ATTORNEY DOCKET NO.	CONFIRMATION NO.
11/584,678	10/20/2006	Wei Wu	200403319-1	5189

EXAMINER

7590 04/22/2008
HEWLETT PACKARD COMPANY
P O BOX 272400, 3404 E. HARMONY ROAD
INTELLECTUAL PROPERTY ADMINISTRATION
FORT COLLINS, CO 80527-2400

ART UNIT	PAPER NUMBER
1645	

NOTIFICATION DATE	DELIVERY MODE
04/22/2008	ELECTRONIC

DECISION GRANTING PETITION UNDER 37 CFR 1.138(d)

The declaration of express abandonment is recognized

This is in response to the petition under 37 CFR 1.138(d), requesting for a refund of any previously paid search fee and excess claims fee in the above-identified application.

The petition is granted.

The express abandonment is recognized. Any previously paid search fee and excess claims fee are hereby refunded.

Telephone inquiries should be directed to the Office of Data Management at (571) 272-4200.

Patent Publication Branch
Office of Data Management

Adjustment date: 04/21/2008 DTERRY 11584678
10/25/2006 EHAILE1 00000027 082025
02 FC:1111 500.00 CR

Adjustment date: 04/21/2008 DTERRY 11584678
11/08/2006 AGOTTOM 00000018 082025
01 FC:1202 100.00 CR

UNITED STATES PATENT AND TRADEMARK OFFICE

Commissioner for Patents
United States Patent and Trademark Office
P.O. Box 1450
Alexandria, VA 22313-1450
www.uspto.gov

OWENS CORNING
2790 COLUMBUS ROAD
GRANVILLE OH 43023

COPY MAILED

OCT 23 2008

OFFICE OF PETITIONS

In re Application of	:	
Miller et al.	:	
Application No. 11/584688	:	DECISION ON PETITION
Filing or 371(c) Date: 10/20/2006	:	UNDER 37 CFR 1.78(a)(3)
Attorney Docket No. 24818D	:	

This is a decision on the petition to accept an unintentionally delayed claim under 35 U.S.C. 120, filed August 26, 2008, for the benefit of the prior-filed applications set forth in the amendment filed with the petition. The petition is properly treated under 37 CFR § 1.78(a)(3).

The petition is **GRANTED**.

A petition for acceptance of a claim for late priority under 37 CFR 1.78(a)(3) is only applicable to those applications filed on or after November 29, 2000. Further, the petition is appropriate only after the expiration of the period specified in 37 CFR 1.78(a)(2)(ii). In addition, the petition under 37 CFR 1.78(a)(3) must be accompanied by:

(1) the reference required by 35 U.S.C. § 120 and 37 CFR 1.78(a)(2)(i) of the prior-filed application, unless previously submitted;
(2) the surcharge set forth in § 1.17(t); and
(3) a statement that the entire delay between the date the claim was due under 37 CFR 1.78(a)(2)(ii) and the date the claim was filed was unintentional. The Director may require additional information where there is a question whether the delay was unintentional.

All of the above requirements having been satisfied, the late claim for priority under 35 U.S.C. § 120 is accepted as being unintentionally delayed.

The granting of the petition to accept the delayed benefit claim to the prior-filed applicatiosn under 37 CFR 1.78(a)(3) should not be construed as meaning that this application is entitled to the benefit of the prior-filed applications. In order for this application to be entitled to the benefit of the prior-filed applications, all other requirements under 35 U.S.C. § 120 and 37 CFR 1.78(a)(1) and (a)(2) must be met. Similarly, the fact that the corrected Filing Receipt

accompanying this decision on petition includes the prior-filed applications should not be construed as meaning that applicant is entitled to the claim for benefit of priority to the prior-filed applicatiosn noted thereon. Accordingly, the examiner will, in due course, consider this benefit claim and determine whether the application is entitled to the benefit of the earlier filing date.

A Corrected Filing Receipt, which includes the priority claim to the prior-filed nonprovisional applications, accompanies this decision on petition.

Any inquiries concerning this decision may be directed to Derek Woods at (571) 272-3232. All other inquiries concerning either the examination procedures or status of the application should be directed to the Technology Center.

This application is being forwarded to Technology Center Art Unit 1796 for consideration by the examiner of applicant's entitlement to claim benefit of priority under 35 U.S.C. § 120 to the prior-filed application.

Anthony Knight
Supervisor
Office of Petitions

ATTACHMENT: Corrected Filing Receipt

UNITED STATES PATENT AND TRADEMARK OFFICE

UNITED STATES DEPARTMENT OF COMMERCE
United States Patent and Trademark Office
Address: COMMISSIONER FOR PATENTS
P.O. Box 1450
Alexandria, Virginia 22313-1450
www.uspto.gov

APPLICATION NUMBER	FILING or 371(c) DATE	GRP ART UNIT	FIL FEE REC'D	ATTY.DOCKET.NO	TOT CLAIMS	IND CLAIMS
11/584,688	10/20/2006	1796	1130	24818D	7	1

CONFIRMATION NO. 5208

CORRECTED FILING RECEIPT

22889
OWENS CORNING
2790 COLUMBUS ROAD
GRANVILLE, OH 43023

OC000000032672279

Date Mailed: 10/20/2008

Receipt is acknowledged of this non-provisional patent application. The application will be taken up for examination in due course. Applicant will be notified as to the results of the examination. Any correspondence concerning the application must include the following identification information: the U.S. APPLICATION NUMBER, FILING DATE, NAME OF APPLICANT, and TITLE OF INVENTION. Fees transmitted by check or draft are subject to collection. Please verify the accuracy of the data presented on this receipt. **If an error is noted on this Filing Receipt, please submit a written request for a Filing Receipt Correction. Please provide a copy of this Filing Receipt with the changes noted thereon. If you received a "Notice to File Missing Parts" for this application, please submit any corrections to this Filing Receipt with your reply to the Notice. When the USPTO processes the reply to the Notice, the USPTO will generate another Filing Receipt incorporating the requested corrections**

Applicant(s)

Larry M. Miller, Tallmadge, OH;
Raymond M. Breindel, Hartiville, OH;
Mitchell Z. Weekley, Tallmadge, OH;
Thomas E. Cisar, Cuyahoga Falls, OH;

Power of Attorney: The patent practitioners associated with Customer Number 22889

Domestic Priority data as claimed by applicant

This application is a CIP of 11/517,748 09/08/2006
which is a CIP of 10/160,817 05/31/2002 ABN

Foreign Applications

If Required, Foreign Filing License Granted: 11/08/2006

The country code and number of your priority application, to be used for filing abroad under the Paris Convention, is **US 11/584,688**

Projected Publication Date: Not Applicable

Non-Publication Request: No

Early Publication Request: No

Title

To enhance the thermal insulation of polymeric foam by reducing cell anisotropic ratio and the method for production thereof

Preliminary Class

521

PROTECTING YOUR INVENTION OUTSIDE THE UNITED STATES

Since the rights granted by a U.S. patent extend only throughout the territory of the United States and have no effect in a foreign country, an inventor who wishes patent protection in another country must apply for a patent in a specific country or in regional patent offices. Applicants may wish to consider the filing of an international application under the Patent Cooperation Treaty (PCT). An international (PCT) application generally has the same effect as a regular national patent application in each PCT-member country. The PCT process **simplifies** the filing of patent applications on the same invention in member countries, but **does not result** in a grant of "an international patent" and does not eliminate the need of applicants to file additional documents and fees in countries where patent protection is desired.

Almost every country has its own patent law, and a person desiring a patent in a particular country must make an application for patent in that country in accordance with its particular laws. Since the laws of many countries differ in various respects from the patent law of the United States, applicants are advised to seek guidance from specific foreign countries to ensure that patent rights are not lost prematurely.

Applicants also are advised that in the case of inventions made in the United States, the Director of the USPTO must issue a license before applicants can apply for a patent in a foreign country. The filing of a U.S. patent application serves as a request for a foreign filing license. The application's filing receipt contains further information and guidance as to the status of applicant's license for foreign filing.

Applicants may wish to consult the USPTO booklet, "General Information Concerning Patents" (specifically, the section entitled "Treaties and Foreign Patents") for more information on timeframes and deadlines for filing foreign patent applications. The guide is available either by contacting the USPTO Contact Center at 800-786-9199, or it can be viewed on the USPTO website at http://www.uspto.gov/web/offices/pac/doc/general/index.html.

For information on preventing theft of your intellectual property (patents, trademarks and copyrights), you may wish to consult the U.S. Government website, http://www.stopfakes.gov. Part of a Department of Commerce initiative, this website includes self-help "toolkits" giving innovators guidance on how to protect intellectual property in specific countries such as China, Korea and Mexico. For questions regarding patent enforcement issues, applicants may call the U.S. Government hotline at 1-866-999-HALT (1-866-999-4158).

LICENSE FOR FOREIGN FILING UNDER

Title 35, United States Code, Section 184

Title 37, Code of Federal Regulations, 5.11 & 5.15

GRANTED

The applicant has been granted a license under 35 U.S.C. 184, if the phrase "IF REQUIRED, FOREIGN FILING LICENSE GRANTED" followed by a date appears on this form. Such licenses are issued in all applications where

the conditions for issuance of a license have been met, regardless of whether or not a license may be required as set forth in 37 CFR 5.15. The scope and limitations of this license are set forth in 37 CFR 5.15(a) unless an earlier license has been issued under 37 CFR 5.15(b). The license is subject to revocation upon written notification. The date indicated is the effective date of the license, unless an earlier license of similar scope has been granted under 37 CFR 5.13 or 5.14.

This license is to be retained by the licensee and may be used at any time on or after the effective date thereof unless it is revoked. This license is automatically transferred to any related applications(s) filed under 37 CFR 1.53(d). This license is not retroactive.

The grant of a license does not in any way lessen the responsibility of a licensee for the security of the subject matter as imposed by any Government contract or the provisions of existing laws relating to espionage and the national security or the export of technical data. Licensees should apprise themselves of current regulations especially with respect to certain countries, of other agencies, particularly the Office of Defense Trade Controls, Department of State (with respect to Arms, Munitions and Implements of War (22 CFR 121-128)); the Bureau of Industry and Security, Department of Commerce (15 CFR parts 730-774); the Office of Foreign AssetsControl, Department of Treasury (31 CFR Parts 500+) and the Department of Energy.

NOT GRANTED

No license under 35 U.S.C. 184 has been granted at this time, if the phrase "IF REQUIRED, FOREIGN FILING LICENSE GRANTED" DOES NOT appear on this form. Applicant may still petition for a license under 37 CFR 5.12, if a license is desired before the expiration of 6 months from the filing date of the application. If 6 months has lapsed from the filing date of this application and the licensee has not received any indication of a secrecy order under 35 U.S.C. 181, the licensee may foreign file the application pursuant to 37 CFR 5.15(b).

UNITED STATES PATENT AND TRADEMARK OFFICE

Commissioner for Patents
United States Patent and Trademark Office
P.O. Box 1450
Alexandria, VA 22313-1450
www.uspto.gov

KALIKO & YEAGER, L.L.C.
500 NORTH FRANKLIN TURNPIKE
RAMSEY NJ 07446

COPY MAILED

AUG 0 8 2008

In re Application of	:	
James Cheung	:	
Application No. 11/584,692	:	ON PETITION
Filed: October 20, 2006	:	
Attorney Docket No. JC-003	:	

This is a decision on the petition under 37 CFR 1.137(b), filed December 12, 2007, to revive the above-identified application.

The petition is **GRANTED**.

The application became abandoned for failure to reply in a timely manner to the Notice to File Missing Parts of Nonprovisional Application (Notice) mailed November 9, 2006. The Notice set a period for reply of two (2) months from the mail date of the Notice. No extensions of time under the provisions of 37 CFR 1.136(a) were obtained. Accordingly, the application became abandoned on January 10, 2007. The Notice of Abandonment was mailed July 13, 2007.

The petition satisfies the requirements of 37 CFR 1.137(b) in that petitioner has supplied (1) the reply in the form of corrected drawings and a new set of claims; (2) the petition fee of $770; and (3) an adequate statement of unintentional delay.

Telephone inquiries concerning this decision should be directed to Terri Williams at (571) 272-2991.

The application file is being referred to the Office of Patent Application Processing for further processing.

Chris Bottorff
Petitions Examiner
Office of Petitions

UTILITY PATENT

IN THE UNITED STATES PATENT AND TRADEMARK OFFICE

Applicant: James Alroy E. Hagquist et al. **Serial No.:** Unknown 11/584706 **Filed:** Herewith 10-23-06 **Title:** COMPOSITION INHIBITING THE EXPANSION OF FIRE, SUPPRESSING EXISTING FIRE, AND METHODS OF MANUFACTURE AND USE THEREOF **Art Unit:** Unknown 1714 **Examiner:** Unknown **Agent Ref:** TLR-5203 US-DIV	FIRST CLASS MAILING CERTIFICATE I hereby certify that this correspondence is being deposited with the United States Postal Service as first class mail under 37 C.F.R.§ 1.8 in an envelope addressed to the Assistant Commissioner for Patents, Washington, D.C. 20231 on _____ (Date) _____ (Print Name) _____ (Signature)

PETITION TO MAKE SPECIAL UNDER 37 C.F.R. § 1.102(c)

Commissioner for Patents
P.O. Box 1450
Alexandria, VA 22313-1450

Dear Sir:

This is a Petition to Make Special the above-identified utility patent application. The grounds and conditions for granting this application special status are found in MPEP 708.02 IV entitled "Applicant's Age."

As provided under 37 C.F.R. 708.01(c), this petition to make special is filed without a fee.

NOV 16 2006

PETITION GRANTED

William Krynski
Special Program Examiner
Technology Center 1700

UNITED STATES PATENT AND TRADEMARK OFFICE

Commissioner for Patents
United States Patent and Trademark Office
P.O. Box 1450
Alexandria, VA 22313-1450
www.uspto.gov

WOLF GREENFIELD & SACKS, P.C.
600 ATLANTIC AVENUE
BOSTON, MA 02210-2206

MAILED

AUG 20 2009

OFFICE OF PETITIONS

In re Application of	:	
William A. LANE, et al.	:	
Application No. 11/584,733	:	DECISION GRANTING PETITION
Filed: October 20, 2006	:	UNDER 37 CFR 1.313(c)(2)
Attorney Docket No. **H0682.70026US00**	:	

This is a decision on the petition under 37 CFR 1.313(c)(2), filed August 19, 2009, to withdraw the above-identified application from issue after payment of the issue fee.

The petition is **GRANTED**.

The above-identified application is withdrawn from issue for consideration of a submission under 37 CFR 1.114 (request for continued examination). *See* 37 CFR 1.313(c)(2).

Petitioner is advised that the issue fee paid on August 12, 2009 cannot be refunded. If, however, this application is again allowed, petitioner may request that it be applied towards the issue fee required by the new Notice of Allowance.[1]

Telephone inquiries should be directed to the undersigned at (571) 272-7253.

This application is being referred to Technology Center AU 2884 for processing of the request for continued examination under 37 CFR 1.114 and for consideration of the concurrently filed information disclosure statement.

/Monica A. Graves/
Petitions Examiner, Office of Petitions

---

[1] *The request to apply the issue fee to the new Notice may be satisfied by completing and returning the new Part B – Fee(s) Transmittal Form (along with any balance due at the time of submission). Petitioner is advised that the Issue Fee Transmittal Form* ***must*** *be completed and timely submitted to avoid abandonment of the application.*

UNITED STATES PATENT AND TRADEMARK OFFICE

Commissioner for Patents
United States Patent and Trademark Office
P.O. Box 1450
Alexandria, VA 22313-1450
www.uspto.gov

KRATZ, QUINTOS & HANSON, LLP
1420 K STREET, N.W.
SUITE 400
WASHINGTON, DC 20005

COPY MAILED

JUL 15 2009

OFFICE OF PETITIONS

In re Application of	:	
Tadaki Morimura	:	
Application No. 11/584,745	:	DECISION ON PETITION
Filed: October 23, 2006	:	TO WITHDRAW
Attorney Docket No. 060807	:	FROM RECORD
	:	

This is a decision on the Request to Withdraw as attorney or agent of record under 37 C.F.R. § 1.36(b), filed June 10, 2009.

The request is **APPROVED**.

The request was signed by Mel R. Quintos on behalf of the practitioners of record associated with Customer No. 23850.

Applicant is reminded that there is no attorney of record at this time.

All future correspondence will be directed to assignee Morimura Kousan Kabushiki Kaisha at the address indicated below.

Telephone inquiries concerning this decision should be directed to Irvin Dingle at (571) 272-3210.

Irvin Dingle
Petitions Examiner
Office of Petitions

cc: Morimura Kousan Kabushiki Kaisha
5-4-25, Segawa
Minoo-shi, Oosaka
Japan

UNITED STATES PATENT AND TRADEMARK OFFICE

UNITED STATES DEPARTMENT OF COMMERCE
United States Patent and Trademark Office
Address: COMMISSIONER FOR PATENTS
P.O. Box 1450
Alexandria, Virginia 22313-1450
www.uspto.gov

APPLICATION NUMBER	FILING OR 371(C) DATE	FIRST NAMED APPLICANT	ATTY. DOCKET NO./TITLE
11/584,745	10/23/2006	Tadaki Morimura	060807

CONFIRMATION NO. 4565

POWER OF ATTORNEY NOTICE

23850
KRATZ, QUINTOS & HANSON, LLP
1420 K Street, N.W.
Suite 400
WASHINGTON, DC 20005

OC000000036939255

Date Mailed: 07/15/2009

NOTICE REGARDING CHANGE OF POWER OF ATTORNEY

This is in response to the Power of Attorney filed 06/10/2009.

- The withdrawal as attorney in this application has been accepted. Future correspondence will be mailed to the new address of record. 37 CFR 1.33.

/idingle/

Office of Data Management, Application Assistance Unit (571) 272-4000, or (571) 272-4200, or 1-888-786-0101

UNITED STATES PATENT AND TRADEMARK OFFICE

UNITED STATES DEPARTMENT OF COMMERCE
United States Patent and Trademark Office
Address: COMMISSIONER FOR PATENTS
P.O. Box 1450
Alexandria, Virginia 22313-1450
www.uspto.gov

APPLICATION NUMBER	FILING OR 371(C) DATE	FIRST NAMED APPLICANT	ATTY. DOCKET NO./TITLE
11/584,745	10/23/2006	Tadaki Morimura	060807

CONFIRMATION NO. 4565

POA ACCEPTANCE LETTER

Morimura Kousan Kabushiki Kaisha
5-4-25, Segawa
Minoo-shi, Oosaka,
JAPAN

OC000000036939372

Date Mailed: 07/15/2009

NOTICE OF ACCEPTANCE OF POWER OF ATTORNEY

This is in response to the Power of Attorney filed 06/10/2009.

The Power of Attorney in this application is accepted. Correspondence in this application will be mailed to the above address as provided by 37 CFR 1.33.

/idingle/

Office of Data Management, Application Assistance Unit (571) 272-4000, or (571) 272-4200, or 1-888-786-0101

SPE RESPONSE FOR CERTIFICATE OF CORRECTION

DATE : 3/12/09 Paper No.: _____

TO SPE OF : ART UNIT 3644

SUBJECT : Request for Certificate of Correction for Appl. No.: 11/584767 Patent No.: 7490437

Please respond to this request for a certificate of correction within 7 days.

FOR IFW FILES: Should claims be approved -

Please review the requested changes/corrections as shown in the **COCIN** document(s) in the IFW application image. No new matter should be introduced, nor should the scope or meaning of the claims be changed.

Please complete the response (see below) and forward the completed response to scanning using document code **COCX**.

FOR PAPER FILES:

Please review the requested changes/corrections as shown in the attached certificate of correction. Please complete this form (see below) and forward it with the file to:

Certificates of Correction Branch (CofC)
South Tower - 9A22
Palm Location 7580

Carlos Young
Certificates of Correction Branch
703-308-9390 ext. 117

Thank You For Your Assistance

The request for issuing the above-identified correction(s) is hereby:
Note your decision on the appropriate box.

- ☒ **Approved** — All changes apply.
- ☐ **Approved in Part** — Specify below which changes **do not** apply.
- ☐ **Denied** — State the reasons for denial below.

Comments: _____

SPE

3644
Art Unit

UNITED STATES PATENT AND TRADEMARK OFFICE

Commissioner for Patents
United States Patent and Trademark Office
P.O. Box 1450
Alexandria, VA 22313-1450
www.uspto.gov

BLAKELY SOKOLOFF TAYLOR & ZAFMAN LLP
1279 OAKMEAD PARKWAY
SUNNYVALE CA 94085-4040

MAILED

MAR 05 2009

OFFICE OF PETITIONS

In re Application of	:	
Yuji Nakajima	:	
Application No.: 11/584785	:	DECISION ON
Filing or 371(c) Date: 10/19/2006	:	PETITION
Attorney Docket Number:	:	
6639P245	:	

This is a decision in response to the "Petition to Withdraw Holding of Abandonment Based on Failure to File Corrected Drawings," filed January 28, 2009. The petition is properly treated under 37 CFR § 1.181(a).

This Petition is hereby dismissed.

Any further petition must be submitted within TWO (2) MONTHS from the mail date of this decision. Extensions of time under 37 CFR 1.136(a) are permitted. The reconsideration request should include a cover letter entitled "Renewed Petition under [insert the applicable code section]." This is not final agency action within the meaning of 5 U.S.C. § 704.

Background

The above-identified application became abandoned for failure to timely and properly reply to the Notice of Allowability, mailed September 18, 2008. The Notice required corrected drawings, and set a non-extendable three (3) month period for reply. No reply having been filed, the application became abandoned December 19, 2008. A Notice of Abandonment was mailed January 12, 2009.

The present petition

Applicant files the present petition and asserts that the box on the Notice of Allowability that was checked stating that corrected drawings were required was checked in error and that correct drawings were already in the file. Applicant further notes that he spoke with the Examiner after receiving the Notice of Abandonment and the Examiner verbally confirmed that amended drawings were not required.

Applicable Law Rules and MPEP

The applicable statute, 35 U.S.C. § 133, Time for prosecuting application, states

> Upon failure of the applicant to prosecute the application within six months after any action therein, of which notice has been given or mailed to the applicant, or within such shorter time, not less than thirty days, as fixed by the Director in such action, the application shall be regarded as abandoned by the parties thereto, unless it be shown to the satisfaction of the Director that such delay was unavoidable.

Abandonment takes place by operation of law for failure to reply to an Office action or timely pay the issue fee, not by operation of the mailing of a Notice of Abandonment. See Lorenz v. Finkl, 333 F.2d 885, 889-90, 142 USPQ 26, 29-30 (CCPA 1964); Krahn v. Commissioner, 15 USPQ2d 1823, 1824 (E.D. Va 1990); In re Application of Fischer, 6 USPQ2d 1573, 1574 (Comm'r Pat. 1988).

It is well settled that the use of "shall" in a statute is the language of command, and where the directions of a statute are mandatory, strict compliance with the statutory terms is essential. Farrel Corp. v. U.S. Int'l Trade Comm'n, 942 F.2d 1147, 20 USPQ2d 1912 (Fed. Cir. 1991).

This section of the statute is further clarified in Office rule 37 CFR § 1.135, Abandonment for failure to reply within time period, which states

> (a) If an applicant of a patent application fails to reply within the time period provided under § 1.134 and § 1.136, the application will become abandoned unless an Office action indicates otherwise.
> (b) Prosecution of an application to save it from abandonment pursuant to paragraph (a) of this section must include such complete and proper reply as the condition of the application may require. The admission of, or refusal to admit, any amendment after final rejection or any amendment not responsive to the last action, or any related proceedings, will not operate to save the application from abandonment.
> (c) When reply by the applicant is a bona fide attempt to advance the application to final action, and is substantially a complete reply to the non-final Office action, but consideration of some matter or compliance with some requirement has been inadvertently omitted, applicant may be given a new time period for reply under § 1.134 to supply the omission.

This section explains that a failure to reply will result in the abandonment of the application.

Applicant is reminded that all business with this Office must be conducted in writing. The applicable rule, 37 CFR 1.2 states:

> All business with the Patent and Trademark Office should be transacted in writing. The personal attendance of applicants or their attorneys or agents at the Patent and Trademark Office is unnecessary. The action of the Patent and Trademark Office will be

> based exclusively on the written record in the Office. No attention will be paid to any alleged oral promise, stipulation, or understanding in relation to which there is disagreement or doubt.

Analysis

Applicant asserts that the box on the Notice of Allowability that was checked stating that corrected drawings were required was checked in error and that correct drawings were already in the file. Applicant further notes that he spoke with the Examiner after receiving the Notice of Abandonment and the Examiner verbally confirmed that amended drawings were not required; however, as stated above, all business should be conducted in writing. Moreover, Applicant did not file a response to the Notice. The MPEP 711.03(c), explaining unavoidable delay, proves instructive. It states:

> Delay resulting from the lack of knowledge or improper application of the patent statute, rules of practice or the MPEP, however, does not constitute "unavoidable" delay. See Haines, 673 F. Supp. at 317, 5 USPQ2d at 1132; Vincent v. Mossinghoff, 230 USPQ 621, 624 (D.D.C. 1985); Smith v. Diamond, 209 USPQ 1091 (D.D.C. 1981); Potter v. Dann, 201 USPQ 574 (D.D.C. 1978); Ex parte Murray, 1891 Dec. Comm'r Pat. 130, 131 (1891). For example, as 37 CFR 1.116 and 1.135(b) are manifest that proceedings concerning an amendment after final rejection will not operate to avoid abandonment of the application in the absence of a timely and proper appeal, a delay is not "unavoidable" when the applicant simply permits the maximum extendable statutory period for reply to a final Office action to expire while awaiting a notice of allowance or other action. Likewise, as a "reasonably prudent person" would file papers or fees in compliance with 37 CFR 1.8 or 1.10 to ensure their timely filing in the USPTO, as well as preserve adequate evidence of such filing, a delay caused by an applicant's failure to file papers or fees in compliance with 37 CFR 1.8 and 1.10 does not constitute "unavoidable" delay. See Krahn, 15 USPQ2d at 1825. Finally, a delay caused by an applicant's lack of knowledge or improper application of the patent statute, rules of practice or the MPEP is not rendered "unavoidable" due to: (A) the applicant's reliance upon oral advice from USPTO employees; or (B) the USPTO's failure to advise the applicant of any deficiency in sufficient time to permit the applicant to take corrective action. See In re Sivertz, 227 USPQ 255, 256 (Comm'r Pat. 1985). (Emphasis supplied).

While this section refers to a final Office action, the principal is equally applicable to a Notice of Allowability. The applicable statute and rule do not differentiate between Office actions. The law states

> Upon failure of the applicant to prosecute the application within six months after **any** action therein, of which notice has been given or mailed to the applicant, or within such shorter time, not less than thirty days, as fixed by the Director in such action, the application shall be regarded as abandoned by the parties thereto.... (Emphasis supplied).

The rule similarly states:

> If an applicant of a patent application fails to reply within the time period provided under § 1.134[1] and § 1.136, the application will become abandoned unless an Office action indicates otherwise

Here, Applicant failed to file a reply to the Notice.

There is no disagreement as to the sufficiency of the reply, because no reply was filed. Since no timely or proper reply to the Office action was filed, the application is abandoned. As stated in the MPEP: Where there is no dispute as to whether an application is abandoned (e.g., the applicant's contentions merely involve the cause of abandonment), a petition under 37 CFR 1.137 (accompanied by the appropriate petition fee) is necessary to revive the abandoned application.

Alternate Venue

Applicant is urged to file a petition under 37 CFR 1.137(b) stating that the delay was unintentional. Public Law 97-247, § 3, 96 Stat. 317 (1982), which revised patent and trademark fees, amended 35 U.S.C. § 41(a)(7) to provide for the revival of an "unintentionally" abandoned application without a showing that the delay in was "unavoidable."

The filing of a petition under 37 CFR 1.137(b) cannot be intentionally delayed and therefore must be filed promptly. A person seeking revival due to unintentional delay can not make a statement that the delay was unintentional unless the entire delay, including the delay from the date it was discovered that the application was abandoned until the filing of the petition to revive under 37 CFR 1.137(b), was unintentional. A statement that the delay was unintentional is not appropriate if petitioner intentionally delayed the filing of a petition for revive under 37 CFR 1.137(b).

Further correspondence with respect to this matter should be addressed as follows:

By mail:	Director for Patents PO Box 1450 Alexandria, VA 22313-1450
By FAX:	(571) 273-8300 Attn: Office of Petitions
By hand:	Customer Service Window Randolph Building 401 Dulany Street Alexandria, VA 22314

[1] 37 CFR 1.134 states: "An Office action will notify the applicant of any non-statutory or shortened statutory time period set for reply to an Office action. Unless the applicant is notified in writing that a reply is required in less than six months, a maximum period of six months is allowed." It does not differentiate as to the Office action.

Telephone inquiries concerning this Decision should be directed to the undersigned at (571) 272-3232.

/Derek L. Woods/
Derek L. Woods
Attorney
Office of Petitions

UNITED STATES PATENT AND TRADEMARK OFFICE

Commissioner for Patents
United States Patent and Trademark Office
P.O. Box 1450
Alexandria, VA 22313-1450
www.uspto.gov

BLAKELY SOKOLOFF TAYLOR & ZAFMAN LLP
1279 OAKMEAD PARKWAY
SUNNYVALE CA 94085-4040

MAILED

APR 29 2009

OFFICE OF PETITIONS

In re Application of	:	
Yuji Nakajima	:	
Application No.: 11/584785	:	DECISION ON
Filing or 371(c) Date: 10/19/2006	:	PETITION
Attorney Docket Number:	:	
6639P245	:	

This is a decision on the Petition for Revival of an Application for Patent Abandoned Unintentionally Under 37 C.F.R. § 1.137(b), filed March 11, 2009.

This Petition is hereby **granted**.

The above-identified application became abandoned for failure to timely and properly reply to the Notice of Allowability, mailed September 18, 2008. The Notice required corrected drawings, and set a non-extendable three (3) month period for reply. No reply having been filed, the application became abandoned December 19, 2008. A Notice of Abandonment was mailed January 12, 2009.

The petition satisfies the conditions for revival pursuant to the provisions of 37 CFR 1.137(b) in that (1) the reply to wit – a Substitute oath/declaration; (2) the petition fee; and (3) the required statement of unintentional delay. Accordingly, the reply is accepted as having been unintentionally delayed.

This application is being referred to the Office of Data Management for processing into a patent.

Telephone inquiries concerning this decision should be directed to the undersigned at (571) 272-3232.

/Derek L. Woods/
Derek L. Woods
Attorney
Office of Petitions

UNITED STATES PATENT AND TRADEMARK OFFICE

Commissioner for Patents
United States Patent and Trademark Office
P.O. Box 1450
Alexandria, VA 22313-1450
www.uspto.gov

AT&T CORP.
ROOM 2A207
ONE AT&T WAY
BEDMINSTER, NJ 07921

COPY MAILED

DEC 17 2008

In re Application of
Richard H. Erving, et al.
Application No. 11/584,830
Filed: October 23, 2006
Attorney Docket No. 2001-0242CON

ON PETITION

This is a decision in response to the petition, filed September 25, 2008, to revive the above-identified application under the provisions of 37 CFR 1.137(b).

The petition is **GRANTED**.

The application became abandoned for a failure to timely respond to a Notice to File Corrected Application Papers mailed November 8, 2006. A Notice of Abandonment was mailed on July 12, 2007. On September 25, 2008, the present petition was filed.

The petition is not signed by a registered patent attorney or patent agent of record. However, in accordance with 37 CFR 1.34, the signature of Mr. Raymond C. Glenny appearing on the correspondence shall constitute a representation to the United States Patent and Trademark Office that he is authorized to represent the particular party on whose behalf he acts.

The petition satisfies the requirements of 37 CFR 1.137(b) in that petitioner has supplied (1) the reply in the form of a substitute specification; (2) the petition fee of $1,540; and (3) an adequate statement of unintentional delay[1].

Petitioner is reminded that the grant of a petition under 37 CFR 1.137 is not a determination that any reply is complete, since the petition may be granted if the reply appears to be *bona fide*. After revival of the application, the Office of Patent Application Processing (OPAP) may, upon more detailed review, determine that the reply is lacking in some respect. In this limited situation, OPAP should send out a letter giving shortened statutory period under 37 CFR 1.135(c) for correction of the error or omission. Extensions of time under 37 CFR 1.136(a) are permitted. If applicant does not correct the omission within the time period set in the letter (including any extension), the application is again abandoned.

[1] 37 CFR 1.137(b)(3) requires a statement that the entire delay in filing the required reply from the due date for the reply until the filing of a grantable petition pursuant to 37 CFR 1.137(b) was unintentional. While the statement is not made by an attorney of record, such statement is being treated as having been made as the result of a reasonable inquiry into the facts and circumstances of such delay. See 37 CFR 10.18(b) and Changes to Patent Practice and Procedure; Final Rule Notice, 62 Fed. Reg. 53131, 53178 (October 10, 1997), 1203 Off. Gaz. Pat. Office 63, 103 (October 21, 1997). In the event that such an inquiry has not been made, petitioner must make such an inquiry. If such inquiry results in the discovery that it is not correct that the entire delay in filing the required reply from the due date for the reply until the filing of a grantable petition pursuant to 37 CFR 1.137(b) was unintentional, petitioner must notify the Office.

The application is being referred to the Office of Patent Application Processing (OPAP) for consideration of the specification filed September 25, 2008.

Telephone inquires related to this decision should be directed to the undersigned at (571) 272-3204. Telephone inquiries related to processing at OPAP should be directed to their hotline at (571) 272-4000.

Sherry D. Brinkley
Petitions Examiner
Office of Petitions

UNITED STATES PATENT AND TRADEMARK OFFICE

Commissioner for Patents
United States Patent and Trademark Office
P.O. Box 1450
Alexandria, VA 22313-1450
www.uspto.gov

LEE G. MEYER, ESQ.
MEYER & ASSOCIATES, LLC
17462 E. POWERS DRIVE
CENTENNIAL, CO 80015-3046

MAILED

SEP 22 2009

OFFICE OF PETITIONS

In re Application of	:	
Joseph Kon	:	DECISION ON PETITION
Application No. 11/584,837	:	TO WITHDRAW
Filed: October 23, 2006	:	FROM RECORD
Attorney Docket No. 50123.0002	:	

This is a decision on the Request to Withdraw as attorney or agent of record under 37 C.F.R. § 1.36(b), filed on August 14, 2009.

The request is **NOT APPROVED**.

A grantable request to withdraw as attorney/agent of record must be signed by every attorney/agent seeking to withdraw or contain a clear indication that one attorney is signing on behalf of another/others.

The request was signed by Lee G. Meyer on behalf of all attorneys of record associated with Customer Number 36176. Accordingly, since Mr. Meyer was appointed by a Registration Number upon filing of the instant application, the Request must reflect withdrawal of practitioners associated with the appropriate Registration Number

All future communications from the Office will be directed to above-listed address until otherwise properly notified by the applicant or a proper change of correspondence address have been submitted.

This application is currently abandoned for failure to timely respond to the Final Office action mailed February 19, 2009.

Telephone inquires concerning this decision should be directed to the undersigned at (571) 272-6059. All other inquires concerning either the examination or status of the application should be directed to the Technology Center.

A. Kelley

Alicia Kelley
Petitions Examiner
Office of Petitions

UNITED STATES PATENT AND TRADEMARK OFFICE

Commissioner for Patents
United States Patent and Trademark Office
P.O. Box 1450
Alexandria, VA 22313-1450
www.uspto.gov

LEE G. MEYER, ESQ.
MEYER & ASSOCIATES, LLC
17462 E. POWERS DRIVE
CENTENNIAL, CO 80015-3046

COPY MAILED

OCT 2 0 2009

OFFICE OF PETITIONS

In re Application of	:	
Joseph Kon	:	DECISION ON PETITION
Application No. 11/584,837	:	TO WITHDRAW
Filed: October 23, 2006	:	FROM RECORD
Attorney Docket No. 50123.0002	:	

This is a decision on the renewed Request to Withdraw as attorney or agent of record under 37 C.F.R. § 1.36(b), filed October 9, 2009.

The request is **APPROVED**.

A grantable request to withdraw as attorney/agent of record must be signed by every attorney/agent seeking to withdraw or contain a clear indication that one attorney is signing on behalf of another/others. The Office will require the practitioner(s) to certify that he, she or they have: (1) given reasonable notice to the client, prior to the expiration of the reply period, which the practitioner(s) intends to withdraw from employment; (2) delivered to the client or a duly authorized representative of the client all papers and property (including funds) to which the client is entitled; and (3) notified the client of any replies that may be due and the time frame within which the client must respond, pursuant to 37 CFR 10.40 (c).

The request was signed by Lee G. Meyer, on behalf of all practitioners of record.

Lee G. Meyer has been withdrawn as attorney of record. Applicant is reminded that there is no attorney of record at this time.

The correspondence address of record has been changed and the new correspondence address is the address indicated below.

There are no outstanding Office actions that require a reply from the applicant.

Telephone inquires concerning this decision should be directed to the undersigned at (571) 272-6059. All other inquires concerning either the examination or status of the application should be directed to the Technology Center.

A. Kelley

Alicia Kelley
Petitions Examiner
Office of Petitions

cc: JOSEPH KON
685 S. NEWPORT STREET
DENVER, CO 80224

UNITED STATES PATENT AND TRADEMARK OFFICE

UNITED STATES DEPARTMENT OF COMMERCE
United States Patent and Trademark Office
Address: COMMISSIONER FOR PATENTS
P.O. Box 1450
Alexandria, Virginia 22313-1450
www.uspto.gov

APPLICATION NUMBER	FILING OR 371(C) DATE	FIRST NAMED APPLICANT	ATTY. DOCKET NO./TITLE
11/584,837	10/23/2006	Joseph Kon	

CONFIRMATION NO. 7137

POWER OF ATTORNEY NOTICE

36178
LEE G. MEYER, ESQ.
MEYER & ASSOCIATES, LLC
17462 E. POWERS DRIVE
CENTENNIAL, CO 80015-3046

OC000000038363657

Date Mailed: 10/20/2009

NOTICE REGARDING CHANGE OF POWER OF ATTORNEY

This is in response to the Power of Attorney filed 10/09/2009.

- The withdrawal as attorney in this application has been accepted. Future correspondence will be mailed to the new address of record. 37 CFR 1.33.

/atkelley/

Office of Data Management, Application Assistance Unit (571) 272-4000, or (571) 272-4200, or 1-888-786-0101

UNITED STATES PATENT AND TRADEMARK OFFICE

COMMISSIONER FOR PATENTS
UNITED STATES PATENT AND TRADEMARK OFFICE
P.O. BOX 1450
ALEXANDRIA, VA 22313-1450
www.uspto.gov

Paper No.

F. CHAU & ASSOCIATES, LLC
130 WOODBURY ROAD
WOODBURY NY 11797

COPY MAILED

MAR 0 5 2007

OFFICE OF PETITIONS

In re Application of	:	
Kim et al.	:	DECISION ON PETITION
Application No. 11/584,858	:	
Filed: October 23, 2006	:	
Attorney Docket No. 8021-427	:	
(SS-25825-US)	:	

This is a decision on the "PETITION TO WITHDRAW NOTICE TO FILE MISSING PARTS OF NONPROVISIONAL APPLICATION" filed December 12, 2006.

Application papers were deposited in the above-identified application on October 23, 2006. However, by Notice to File Missing Parts of Application mailed November 9, 2006, applicants were advised that the oath or declaration was missing and that a late surcharge was required with its filing. The Notice set a two-month time limit for reply, with extensions of time permitted under § 1.136(a).

In response, applicants timely filed the instant petition. Applicants assert that the Notice was mailed in error. Applicants state that the patent application as filed on October 23, 2006 included a copy of the executed declaration document. In support thereof, applicants submitted copies of their itemized and date-stamped return postcard and of the executed declaration as they maintain it was filed on October 23, 2006.

A postcard receipt, which itemizes and properly identifies the items, which are being filed, serves as prima facie evidence of receipt in the Office of all items listed thereon on the date stamped thereon by the Office. See MPEP 503. A review of petitioner's postcard receipt reveals that: 1) it was date stamped as received in the USPTO on October 23, 2006 and the

papers submitted therewith assigned application No. 11/584858; 2) it specifically identifies the items being filed, including "2 Sheets Declaration and Power of Attorney" and 3) it lacks any annotation of non-receipt of any item denoted on the postcard. The evidence shows that a 2 Sheet Declaration and Power of Attorney was among the papers submitted on original filing of the application on October 23, 2006.

No declaration signed or otherwise, was present in the application with a date of receipt of October 23, 2006. It is concluded that the executed declaration resubmitted on petition is the declaration identified on the postcard. Thus, the application as filed included an executed declaration and applicants are correct that the Notice was mailed in error.

In view thereof, the Notice to File Missing Part of Application is **VACATED**.

The petition under § 1.181 is **GRANTED**.

No fee is required on petition under § 1.181.

The Office of Initial Patent Examination (OIPE) has been advised of this decision. The application file is, thereby, forwarded to OIPE to:

- vacate the Notice to File Missing Parts of Application mailed November 9, 2006. (The declaration was timely filed on October 23, 2006 and misplaced by the Office. No surcharge is due.);
- process the Declaration for Patent re-supplied on petition filed December 12, 2006;
- mail a corrected filing receipt; and
- complete pre-examination processing.

Telephone inquiries specific to this decision should be directed to the undersigned at (571) 272-3219.

Nancy Johnson
Senior Petitions Attorney
Office of Petitions

UNITED STATES PATENT AND TRADEMARK OFFICE

UNITED STATES DEPARTMENT OF COMMERCE
United States Patent and Trademark Office
Address: COMMISSIONER FOR PATENTS
P.O. Box 1450
Alexandria, Virginia 22313-1450
www.uspto.gov

GOODWIN PROCTER LLP
PATENT ADMINISTRATOR
53 STATE STREET
EXCHANGE PLACE
BOSTON, MA 02109-2881

Mail Date: 04/20/2010

Applicant	: Yosef Stein	: DECISION ON REQUEST FOR
Patent Number	: 7650322	: RECALCULATION of PATENT
Issue Date	: 01/19/2010	: TERM ADJUSTMENT IN VIEW
Appliction No	: 11/584,877	: OF WYETH AND NOTICE OF INTENT TO
Filed	: 10/23/2006	: ISSUE CERTIFICATE OF CORRECTION
		:

The Request for Recalculation is **GRANTED** to the extent indicated.

The patent term adjustment has been determined to be **442** days. The USPTO will *sua sponte* issue a certificate of correction reflecting the amount of PTA days determined by the recalculation.

Prior to the issuance of the certificate of correction, the USPTO will afford patentee an opportunity to be heard and request reconsideration. Accordingly, patentee has **one month or thirty (30) days**, whichever is longer, to file a request for reconsideration of this patent term adjustment calculation. See 35 U.S.C. 154(b)(3)(B)(ii) and 37 CFR 1.322(a)(4). No extensions of time will be granted under 37 CFR 1.136.

Patentee should use document code PET.OP if electronically filing a request for reconsideration of this patent term adjustment calculation. The patentee must also include the information required by 37 CFR 1.705(b)(2) and the fee required by 37 CFR 1.18(e). If patentee does not file a timely request for reconsideration of this patent term adjustment calculation including the information required by 37 CFR 1.705(b)(2) and the fee required by 37 CFR 1.18(e), the USPTO will issue a certificate of correction reflecting the PTA determination noted above.

Patentee should be aware that in order to preserve the right to review in the United States District Court for the District of Columbia of the USPTO patent term adjustment determination, patentee must ensure that he or she also take the steps required under 35 U.S.C. 154(b)(4)(A) in a timely manner. Nothing in the request for recalculation should be construed as providing an alternative time frame for commencing a civil action under 35 U.S.C. 154(b)(4)(A).

Any questions concerning this decision should be directed to the Office of Patent Legal Administration at 571-272-7702.

UNITED STATES PATENT AND TRADEMARK OFFICE

Commissioner for Patents
United States Patent and Trademark Office
P.O. Box 1450
Alexandria, VA 22313-1450
www.uspto.gov

COPY MAILED

OCT 09 2009

OFFICE OF PETITIONS

KATTEN MUCHIN ROSENMAN LLP
575 MADISON AVENUE
NEW YORK NY 10022-2585

In re Application of	:	
Shoichi SATO et al.	:	
Application No. 11/584,898	:	ON PETITION
Filed: October 23, 2006	:	
Attorney Docket No. FUJA 16.497C	:	

This is a decision on the petition under 37 CFR 1.137(b), filed July 03, 2009, to revive the above-identified application.

The petition is **GRANTED**.

The above-identified application became abandoned for failure to reply in a timely manner to the non-final Office action mailed January 02, 2009, which set a shortened statutory period for reply of three (3) months. No extensions of time under the provisions of 37 CFR 1.136(a) were obtained. Accordingly, the above-identified application became abandoned on April 03, 2009.

The petition satisfies the conditions for revival pursuant to the provisions of 37 CFR 1.137(b) in that (1) the reply in the form of an amendment; (2) the petition fee of $1,620; and the required statement of unintentional delay have been received. Accordingly, the reply to the non-final Office action of January 02, 2009 is accepted as having been unintentionally delayed.

Telephone inquiries concerning this decision should be directed to Niketa I. Patel at 571-272-4156 or in her absence, the undersigned at 571-272-7099.

The application file is being referred to Technology Center AU 2617 for appropriate action on the concurrently filed amendment.

David A. Bucci
Petitions Examiner
Office of Petitions

UNITED STATES PATENT AND TRADEMARK OFFICE

Commissioner for Patents
United States Patent and Trademark Office
P.O. Box 1450
Alexandria, VA 22313-1450
www.uspto.gov

FROMMER LAWRENCE & HAUG
745 FIFTH AVENUE- 10TH FL.
NEW YORK, NY 10151

COPY MAILED

MAR 1 5 2007

OFFICE OF PETITIONS

Decision on Petition

In re Application of Kondo et al. :
Application No. 11/584,907 :
Filing Date: October 23, 2006 :
Attorney Docket No. 450119-03672.1 :

This is a decision in response to the petition filed November 22, 2006, requesting, in effect, that Figure 30 filed on November 22, 2006, be entered as part of the original disclosure.

The petition is **granted**.

The application was filed October 23, 2006.

The Office of Initial Patent Examination mailed a "Notice of Omitted Item(s)" on November 9, 2006. The Notice stated Figures 30 and 40I did not appear to be part of the application as filed.

In response, the present petition was filed. Petitioner alleges Figure 30 was filed with the original application.

The USPTO file for this application includes only 37 sheets of drawings. The file does not contain the 38 sheets of drawings, including the sheet with Figure 30, petitioner alleges were filed with the original application. However, petitioner has submitted a postcard receipt acknowledging receipt of 38 sheets of drawings on October 23, 2006.[1] Therefore, the Office is persuaded that Figure 30 was part of the originally filed application but was later misplaced by the Office.

The Notice mailed October 23, 2006, is vacated to the extent it indicated Figure 30 was missing.

No petition fee is required and none has been charged.

The Office of Initial Patent Examination will be informed of the instant decision and will process the application with a filing date of October 23, 2006, using the papers filed October 23, 2006, and the drawing sheet including Figure 30 filed November 22, 2006.

---

[1] "A post card receipt which itemizes and properly identifies the papers which are being filed serves as *prima facie* evidence of receipt in the PTO of all items listed thereon by the PTO." M.P.E.P. § 503.

Telephone inquiries regarding this communication should be directed to Petitions Attorney Steven Brantley at (571) 272-3203.

Charles Steven Brantley
Senior Petitions Attorney
Office of Petitions

UNITED STATES PATENT AND TRADEMARK OFFICE

NOV 15 2006

Commissioner for Patents
United States Patent and Trademark Office
P.O. Box 1450
Alexandria, VA 22313-1450
www.uspto.gov

OMRI M. BEHR
325 PIERSON AVENUE
EDISON NJ 08837-3123

In re Application of	:
Leonard Mackles et al	:
Serial No.: 11/584,939	: PETITION TO MAKE SPECIAL
Filed: October 24, 2006	:
Attorney Docket No.: CHAV3.0-040	:

This is in response to the petition filed October 24, 2006, to make the above-identified application special under the provisions of 37 CFR 1.102(c), based on the age of the applicant.

Applicant has satisfied the provisions set forth in M.P.E.P. 708.02, IV. Therefor the petition is **GRANTED**.

The application will be forwarded to the examiner for action on the merits commensurate with this decision.

Should there be any questions with regard to this letter please contact William R. Dixon, Jr. by letter addressed to the Director, Technology Center 1600, PO BOX 1450, ALEXANDRIA, VA 22313-1450, or by telephone at 571-272-0519 or by facsimile transmission to the general Office facsimile number, 571-273-8300.

William R. Dixon, Jr.
Special Program Examiner
Technology Center 1600

UNITED STATES PATENT AND TRADEMARK OFFICE

Commissioner for Patents
United States Patent and Trademark Office
P.O. Box 1450
Alexandria, VA 22313-1450
www.uspto.gov

DINSMORE & SHOHL, LLP
ONE DAYTON CENTRE, ONE SOUTH MAIN STREET
SUITE 1300
DAYTON, OH 45402-2023

COPY MAILED
NOV 19 2008

In re Application of	:	
Michael Arbour-Neagoe, et. al.	:	
Application No. 11/584,970	:	DECISION ON PETITION
Filed: October 23, 2006	:	
Attorney Docket No. CTT 0001 PA/36604.1	:	

This is a decision on the petition under 37 CFR 1.137(b), filed on September 19, 2008, to revive the above-identified application.

The application became abandoned for failure to timely file a complete reply to the Notice to File Missing Parts of Nonprovisional Application mailed on November 13, 2006. A Notice of Abandonment was mailed September 10, 2008.

The petition satisfies the requirements of 37 CFR 1.137(b) in that petitioner has supplied (1) the reply in the form of an executed Oath/Declaration with the $65 surcharge and five sheets of replacement drawings containing Figures 1-11E;(2) the petition fee of $770; and (3) a proper statement of unintentional delay. Therefore, the petition is **GRANTED**.

The Office acknowledges receipt of $60 for a one month extension of time filed on September 19, 2008. However, an extension of time under 37 CFR 1.136 must be filed prior to the expiration of the maximum extendable period for reply. *See* In re Application of S., 8 USPQ2d 1630, 1631 (Comm'r Pats. 1988). Since the $60 extension of time was subsequent to the maximum extendable period for reply, this fee is unnecessary and petitioner may request a refund of this fee by writing to the following address: Mail Stop 16, Commissioner for Patents, P. O. Box 1450, Alexandria, VA 22313-1450. A copy of this decision should accompany petitioner's request.

This application file is being referred to the Office of Patent Application Processing for further processing.

Telephone inquiries concerning this decision should be directed to the undersigned at (571) 272-3226.

Andrea Smith
Petitions Examiner
Office of Petitions

UNITED STATES PATENT AND TRADEMARK OFFICE

Commissioner for Patents
United States Patent and Trademark Office
P.O. Box 1450
Alexandria, VA 22313-1450
www.uspto.gov

GERALD B. ROSENBERG
NEW TECH LAW
260 SHERIDAN AVENUE
SUITE 208
PALO ALTO, CA 94306-2009

COPY MAILED

NOV 19 2008

OFFICE OF PETITIONS

In re Application of	:	
Duc Pham, et. al.	:	
Application No. 11/584,971	:	ON PETITION
Filed: October 23, 2006	:	
Attorney Docket No. AESN3012DIV1	:	

This is a decision on the petition under 37 CFR 1.137(b), filed July 21, 2008, to revive the above-identified application.

The application became abandoned for failure to respond to the non-final Office action mailed December 19, 2007. A Notice of Abandonment was mailed on July 9, 2008.

The instant petition is not signed by an attorney of record. However, in accordance with 37 CFR 1.34(a), the signature appearing on the petition shall constitute a representation to the United States Patent and Trademark Office that he is authorized to represent the particular party on whose behalf he acts.

The petition satisfies the requirements of 37 CFR 1.137(b) in that petitioner has supplied (1) the reply in the form of an amendment; (2) the petition fee of $1,540; and (3) a proper statement of unintentional delay. Therefore, the petition is **GRANTED**.

The Office acknowledges receipt of $1,050 for a three months extension of time filed on July 21, 2008. However, an extension of time under 37 CFR 1.136 must be filed prior to the expiration of the maximum extendable period for reply. See In re Application of S., 8 USPQ2d 1630, 1631 (Comm'r. Pats. 1988). Accordingly, since the $1,050 extension of time was subsequent to the maximum extendable period for reply, this fee is unnecessary and will be credited to petitioner's deposit account.

This application file is being referred to Technology Center Art Unit 2134 for review of the amendment filed with the instant petition.

Telephone inquiries concerning this decision should be directed to the undersigned at (571) 272-3226.

Andrea Smith
Petitions Examiner
Office of Petitions

UNITED STATES PATENT AND TRADEMARK OFFICE

Commissioner for Patents
United States Patent and Trademark Office
P.O. Box 1450
Alexandria, VA 22313-1450
www.uspto.gov

GERALD B ROSENBERG
NEW TECH LAW
260 SHERIDAN AVENUE
SUITE 208
PALO ALTO CA 94306-2009

MAILED

JUN 0 4 2009

OFFICE OF PETITIONS

In re Application of	:	
Pham et al.	:	
Application No. 11/584,971	:	DECISION ON PETITION
Filed: October 23, 2006	:	
Attorney Docket No. AESN3012DIV1	:	

This is a decision on the petition under the unintentional provisions of 37 CFR 1.137(b), filed May 7, 2009, to revive the above-identified application.

The petition is **GRANTED**.

This application became abandoned for failure to timely pay the issue and publication fees on or before March 17, 2009, as required by the Notice of Allowance and Fee(s) Due mailed December 17, 2008. Accordingly, the date of abandonment of this application is March 18, 2009. A Notice of Abandonment was mailed April 14, 2009.

The petition satisfies the requirements of 37 CFR 1.137(b) in that petitioner has supplied (1) the reply in the form of payment of the issue fee of $1,510.00 and publication fee of $300.00; (2) the petition fee of $1,620.00; and (3) a proper statement of unintentional delay.

Telephone inquiries concerning this decision should be directed to Joan Olszewski at (571) 272-7751.

This application is being referred to the Office of Data Management for processing into a patent.

/Liana Walsh/
Liana Walsh
Petitions Examiner
Office of Petitions

UNITED STATES PATENT AND TRADEMARK OFFICE

UNITED STATES DEPARTMENT OF COMMERCE
United States Patent and Trademark Office
Address: COMMISSIONER FOR PATENTS
P.O. Box 1450
Alexandria, Virginia 22313-1450
www.uspto.gov

THE PROCTER & GAMBLE COMPANY
Global Legal Department - IP
Sycamore Building - 4th Floor
299 East Sixth Street
CINCINNATI, OH 45202

Mail Date: 04/27/2010

Applicant	: Rajan Keshav Panandiker	: DECISION ON REQUEST FOR
Patent Number	: 7608575	: RECALCULATION of PATENT
Issue Date	: 10/27/2009	: TERM ADJUSTMENT IN VIEW
Application No	: 11/584,972	: OF WYETH AND NOTICE OF INTENT TO
Filed	: 10/23/2006	: ISSUE CERTIFICATE OF CORRECTION
		:

The Request for Recalculation is **GRANTED** to the extent indicated.

The patent term adjustment has been determined to be **377** days. The USPTO will *sua sponte* issue a certificate of correction reflecting the amount of PTA days determined by the recalculation.

Prior to the issuance of the certificate of correction, the USPTO will afford patentee an opportunity to be heard and request reconsideration. Accordingly, patentee has **one month or thirty (30) days**, whichever is longer, to file a request for reconsideration of this patent term adjustment calculation. See 35 U.S.C. 154(b)(3)(B)(ii) and 37 CFR 1.322(a)(4). No extensions of time will be granted under 37 CFR 1.136.

Patentee should use document code PET.OP if electronically filing a request for reconsideration of this patent term adjustment calculation. The patentee must also include the information required by 37 CFR 1.705(b)(2) and the fee required by 37 CFR 1.18(e). If patentee does not file a timely request for reconsideration of this patent term adjustment calculation including the information required by 37 CFR 1.705(b)(2) and the fee required by 37 CFR 1.18(e), the USPTO will issue a certificate of correction reflecting the PTA determination noted above.

Patentee should be aware that in order to preserve the right to review in the United States District Court for the District of Columbia of the USPTO patent term adjustment determination, patentee must ensure that he or she also take the steps required under 35 U.S.C. 154(b)(4)(A) in a timely manner. Nothing in the request for recalculation should be construed as providing an alternative time frame for commencing a civil action under 35 U.S.C. 154(b)(4)(A).

Any questions concerning this decision should be directed to the Office of Patent Legal Administration at 571-272-7702.

UNITED STATES PATENT AND TRADEMARK OFFICE

Commissioner for Patents
United States Patent and Trademark Office
P.O. Box 1450
Alexandria, VA 22313-1450
www.uspto.gov

COPY MAILED

DEC 0 5 2007

OFFICE OF PETITIONS

STEPHEN S EAVES
9 GENERAL STANTON LANE
CHARLESTOWN RI 02813

In re Application of Stephen Spencer Eaves Application No. 11/584,982 Filed: October 23, 2006 Title: Battery Health Monitor	: : : : :	ON PETITION

This is a decision on the petition to revive under 37 CFR 1.137(b), filed July 27, 2007.

The petition under 37 CFR 1.137(b) is **GRANTED**.

The above-identified application became abandoned for failure to timely file a reply in response to the Notice to File Corrected Application Papers mailed November 14, 2006, which set an extendable period for reply of two (2) months. No reply having been timely received, the application became abandoned on January 15, 2007. A Notice of Abandonment was mailed on July 17, 2007.

With the instant petition, applicant paid the petition fee, made the proper statement of unintentional delay, and submitted the required reply in the form of a substitute specification.

The matter is being forwarded to the Office of Patent Application Processing for pre-examination processing.

Telephone inquiries related to this decision should be directed to the undersigned at (571)272-3207.

Cliff Congo
Petitions Attorney
Office of Petitions

UNITED STATES PATENT AND TRADEMARK OFFICE

UNITED STATES DEPARTMENT OF COMMERCE
United States Patent and Trademark Office
Address: COMMISSIONER FOR PATENTS
P.O. Box 1450
Alexandria, Virginia 22313-1450
www.uspto.gov

APPL NO.	FILING OR 371 (c) DATE	ART UNIT	FIL FEE REC'D	ATTY.DOCKET NO	DRAWINGS	TOT CLMS	IND CLMS
11/585,014	10/20/2006	2624	1450	MIPFP196	36	17	4

CONFIRMATION NO. 7412

CORRECTED FILING RECEIPT

OC000000021617287

25920
MARTINE PENILLA & GENCARELLA, LLP
710 LAKEWAY DRIVE
SUITE 200
SUNNYVALE, CA 94085

Date Mailed: 12/14/2006

Receipt is acknowledged of this regular Patent Application. It will be considered in its order and you will be notified as to the results of the examination. Be sure to provide the U.S. APPLICATION NUMBER, FILING DATE, NAME OF APPLICANT, and TITLE OF INVENTION when inquiring about this application. Fees transmitted by check or draft are subject to collection. Please verify the accuracy of the data presented on this receipt. **If an error is noted on this Filing Receipt, please mail to the Commissioner for Patents P.O. Box 1450 Alexandria Va 22313-1450. Please provide a copy of this Filing Receipt with the changes noted thereon. If you received a "Notice to File Missing Parts" for this application, please submit any corrections to this Filing Receipt with your reply to the Notice. When the USPTO processes the reply to the Notice, the USPTO will generate another Filing Receipt incorporating the requested corrections (if appropriate).**

Applicant(s)

Toshiaki Kakutani, Nagano-ken, JAPAN;

Power of Attorney: None

Domestic Priority data as claimed by applicant

This application is a CON of PCT/JP05/08273 04/22/2005

Foreign Applications

JAPAN 2004-126971 04/22/2004

If Required, Foreign Filing License Granted: 11/09/2006

The country code and number of your priority application, to be used for filing abroad under the Paris Convention, is US11/585,014

Projected Publication Date: 02/15/2007

Non-Publication Request: No

Early Publication Request: No

Title

Image processing apparatus for carrying out multi-value quantization in multiple-pixel units

Preliminary Class

382

PROTECTING YOUR INVENTION OUTSIDE THE UNITED STATES

Since the rights granted by a U.S. patent extend only throughout the territory of the United States and have no effect in a foreign country, an inventor who wishes patent protection in another country must apply for a patent in a specific country or in regional patent offices. Applicants may wish to consider the filing of an international application under the Patent Cooperation Treaty (PCT). An international (PCT) application generally has the same effect as a regular national patent application in each PCT-member country. The PCT process **simplifies** the filing of patent applications on the same invention in member countries, but **does not result** in a grant of "an international patent" and does not eliminate the need of applicants to file additional documents and fees in countries where patent protection is desired.

Almost every country has its own patent law, and a person desiring a patent in a particular country must make an application for patent in that country in accordance with its particular laws. Since the laws of many countries differ in various respects from the patent law of the United States, applicants are advised to seek guidance from specific foreign countries to ensure that patent rights are not lost prematurely.

Applicants also are advised that in the case of inventions made in the United States, the Director of the USPTO must issue a license before applicants can apply for a patent in a foreign country. The filing of a U.S. patent application serves as a request for a foreign filing license. The application's filing receipt contains further information and guidance as to the status of applicant's license for foreign filing.

Applicants may wish to consult the USPTO booklet, "General Information Concerning Patents" (specifically, the section entitled "Treaties and Foreign Patents") for more information on timeframes and deadlines for filing foreign patent applications. The guide is available either by contacting the USPTO Contact Center at 800-786-9199, or it can be viewed on the USPTO website at http://www.uspto.gov/web/offices/pac/doc/general/index.html.

For information on preventing theft of your intellectual property (patents, trademarks and copyrights), you may wish to consult the U.S. Government website, http://www.stopfakes.gov. Part of a Department of Commerce initiative, this website includes self-help "toolkits" giving innovators guidance on how to protect intellectual property in specific countries such as China, Korea and Mexico. For questions regarding patent enforcement issues, applicants may call the U.S. Government hotline at 1-866-999-HALT (1-866-999-4158).

LICENSE FOR FOREIGN FILING UNDER
Title 35, United States Code, Section 184
Title 37, Code of Federal Regulations, 5.11 & 5.15

GRANTED

The applicant has been granted a license under 35 U.S.C. 184, if the phrase "IF REQUIRED, FOREIGN FILING LICENSE GRANTED" followed by a date appears on this form. Such licenses are issued in all applications where the conditions for issuance of a license have been met, regardless of whether or not a license may be required as set forth in 37 CFR 5.15. The scope and limitations of this license are set forth in 37 CFR 5.15(a) unless an earlier license has been issued under 37 CFR 5.15(b). The license is subject to revocation upon written notification. The date indicated is the effective date of the license, unless an earlier license of similar scope has been granted under 37 CFR 5.13 or 5.14.

This license is to be retained by the licensee and may be used at any time on or after the effective date thereof unless it is revoked. This license is automatically transferred to any related applications(s) filed under 37 CFR 1.53(d). This license is not retroactive.

The grant of a license does not in any way lessen the responsibility of a licensee for the security of the subject matter as imposed by any Government contract or the provisions of existing laws relating to espionage and the national security or the export of technical data. Licensees should apprise themselves of current regulations especially with respect to certain countries, of other agencies, particularly the Office of Defense Trade Controls, Department of State (with respect to Arms, Munitions and Implements of War (22 CFR 121-128)); the Bureau of Industry and Security, Department of Commerce (15 CFR parts 730-774); the Office of Foreign Assets Control, Department of Treasury (31 CFR Parts 500+) and the Department of Energy.

NOT GRANTED

No license under 35 U.S.C. 184 has been granted at this time, if the phrase "IF REQUIRED, FOREIGN FILING LICENSE GRANTED" DOES NOT appear on this form. Applicant may still petition for a license under 37 CFR 5.12, if a license is desired before the expiration of 6 months from the filing date of the application. If 6 months has lapsed from the filing date of this application and the licensee has not received any indication of a secrecy order under 35 U.S.C. 181, the licensee may foreign file the application pursuant to 37 CFR 5.15(b).

UNITED STATES PATENT AND TRADEMARK OFFICE

Commissioner for Patents
United States Patent and Trademark Office
P.O. Box 1450
Alexandria, VA 22313-1450
www.uspto.gov

JJGJR.: 08-07

Paper No: __

COPY MAILED

SEP 1 0 2007

OFFICE OF PETITIONS

KNOBBE MARTENS
OLSON & BEAR LLP
2040 MAIN STREET
FOURTEENTH FLOOR
IRVINE CA 92614

In re Application of	:	
Solovay, et al.	:	
Application No. 11/585,043	:	ON PETITION
Filed: 23 October, 2006	:	
Attorney Docket No. GLAUKO.100CP1C1	:	

This is a decision on the petition filed on 27 December, 2006, under 37 C.F.R. §1.47(a).

For the reasons set forth below, the petition under 37 C.F.R. §1.47(a) is **DISMISSED**.

NOTES:

(1) Any reply must include a renewed petition (and fee) must include a petition under 37 C.F.R. §1.47 and must be submitted within two (2) months from the mail date of this decision. Extensions of time under 37 C.F.R. §1.136(a) are permitted. The reconsideration request should include a cover letter entitled "Petition under 37 C.F.R. §1.47";

(2) Thereafter, there will be no further reconsideration of this matter.

BACKGROUND

The record indicates:

- the instant application was filed on 23 October, 2006, without, *inter alia*, a fully executed oath/declaration;

- on 7 November, 2006 Office mailed a Notice of Missing Parts indicating, *inter alia*, that a fully executed oath/declaration (signed and dated) was required;

- on 27 December, 2006, Petitioner William H. Shreve (Reg. No. 37,678), former Counsel, filed, *inter alia*, the instant petition with an oath/declaration signed by co-inventors Solovay, Lynch and Brown on behalf of themselves and non-signing co-inventor Stephane Gobron (Mr. Gobron) and Petitioner's statement as to the procedure followed, however, what is clear from the documents submitted is that sometime before or after the petition was drafted, Petitioner learned that there was another address for Mr. Gobron, and that has not been stated by Petitioner, nor has there been a statement as to the diligent effort to determine a latest reasonably believed to be current address for Mr. Gobron the non-signing inventor to which to transmit the entire application–description, claims, abstract and drawings–as required by statute, regulation and practice of the Office, and Petitioner must set forth that detail in and a copy of any transmittal letter with and future renewed petition filed herein.

Out of an abundance of caution, Petitioners always are reminded that those registered to practice *and* all others who make representations before the Office are to inquire into the underlying facts of representations made to the Office and support averments with the appropriate documentation–since all owe to the Office the continuing duty to disclose.[1]

---

[1] See supplement of 17 June, 1999. The Patent and Trademark Office is relying on petitioner's duty of candor and good faith and accepting a statement made by Petitioner. See Changes to Patent Practice and Procedure, 62 Fed. Reg. at 53160 and 53178, 1203 Off. Gaz. Pat. Office at 88 and 103 (responses to comments 64 and 109)(applicant obligated under 37 C.F.R. §10.18 to inquire into the underlying facts and circumstances when providing statements to the Patent and Trademark Office).

Specifically, the regulations at 37 C.F.R. §10.18 provide:

§ 10.18 Signature and certificate for correspondence filed in the Patent and Trademark Office.
(a) For all documents filed in the Office in patent, trademark, and other non-patent matters, except for correspondence that is required to be signed by the applicant or party, each piece of correspondence filed by a practitioner in the Patent and Trademark Office must bear a signature by such practitioner complying with the provisions of §1.4(d), §1.4(e), or § 2.193(c)(1) of this chapter.
(b) By presenting to the Office (whether by signing, filing, submitting, or later advocating) any paper, the party presenting such paper, whether a practitioner or non-practitioner, is certifying that—

(1) All statements made therein of the party's own knowledge are true, all statements made therein on information and belief are believed to be true, and all statements made therein are made with the knowledge that whoever, in any matter within the jurisdiction of the Patent and Trademark Office, knowingly and willfully falsifies, conceals, or covers up by any trick, scheme, or device a material fact, or makes any false, fictitious or fraudulent statements or representations, or makes or uses any false writing or document knowing the same to contain any false, fictitious or fraudulent statement or entry, shall be subject to the penalties set forth under 18 U.S.C. 1001, and that violations of this paragraph may jeopardize the validity of the application or document, or the validity or enforceability of any patent, trademark registration, or certificate resulting therefrom; and

(2) To the best of the party's knowledge, information and belief, formed after an inquiry reasonable under the circumstances, that —

(i) The paper is not being presented for any improper purpose, such as to harass someone or to cause unnecessary delay or needless increase in the cost of prosecution before the Office;

(ii) The claims and other legal contentions therein are warranted by existing law or by a nonfrivolous argument for the extension,

ANALYSIS

The regulations at 37 C.F.R. §1.47 provide in pertinent part:

> **§ 1.47 Filing when an inventor refuses to sign or cannot be reached.**
> (a) If a joint inventor refuses to join in an application for patent or cannot be found or reached after diligent effort, the application may be made by the other inventor on behalf of himself or herself and the nonsigning inventor. The oath or declaration in such an application must be accompanied by a petition including proof of the pertinent facts, the fee set forth in § 1.17(h), and the last known address of the nonsigning inventor. The nonsigning inventor may subsequently join in the application by filing an oath or declaration complying with §1.63.
> * * *

The regulations at 37 C.F.R. §1.63 provide in pertinent part:

> **§1.63 Oath or declaration.**
>
> (b) In addition to meeting the requirements of paragraph (a)of this section, the oath or declaration must also:
>
> (1)Identify the application to which it is directed;
>
> (2) State that the person making the oath or declaration has reviewed and understands the contents of the application, Including the claims, as amended by any amendment specifically referred to in the oath or declaration; and

---

modification, or reversal of existing law or the establishment of new law;

(iii) The allegations and other factual contentions have evidentiary support or, if specifically so identified, are likely to have evidentiary support after a reasonable opportunity for further investigation or discovery; and

(iv) The denials of factual contentions are warranted on the evidence, or if specifically so identified, are reasonably based on a lack of information or belief.

(c) Violations of paragraph (b)(1) of this section by a practitioner or non-practitioner may jeopardize the validity of the application or document, or the validity or enforceability of any patent, trademark registration, or certificate resulting therefrom. Violations of any of paragraphs (b)(2)(i) through (iv) of this section are, after notice and reasonable opportunity to respond, subject to such sanctions as deemed appropriate by the Commissioner, or the Commissioner's designee, which may include, but are not limited to, any combination of—

(1) Holding certain facts to have been established;
(2) Returning papers;
(3) Precluding a party from filing a paper, or presenting or contesting an issue;
(4) Imposing a monetary sanction;
(5) Requiring a terminal disclaimer for the period of the delay; or
(6) Terminating the proceedings in the Patent and Trademark Office.

(d) Any practitioner violating the provisions of this section may also be subject to disciplinary action. See § 10.23(c)(15).

[Added 50 FR 5175, Feb. 6, 1985, effective Mar. 8, 1985; para. (a) revised, 58 FR 54494, Oct. 22, 1993, effective Nov. 22, 1993; paras. (a) & (b) revised, paras. (c) & (d) added, 62 FR 53131, Oct. 10, 1997, effective Dec. 1, 1997; para. (a) revised, 69 FR 56481, Sept. 21, 2004, effective Oct. 21, 2004]

> (3) State that the person making the oath or declaration acknowledges the duty to disclose to the Office all information known to the person to be material to patentability as defined in § 1.56.

When one alleges a refusal of the inventor to sign the application papers, the circumstances of the presentation of the application papers and of the refusal must be specified in a statement of facts by the person who, *inter alia*, presented the inventor with the application papers and/or to whom the refusal was made.

The commentary at MPEP §409.03(d) provides:

> **409.03(d) Proof of Unavailability or Refusal**
>
> INVENTOR CANNOT BE REACHED
>
> Where inability to find or reach a nonsigning inventor "after diligent effort" is the reason for filing under 37 C.F.R. §1.47, a statement of facts should be submitted that fully describes the exact facts which are relied on to establish that a diligent effort was made.
>
> The fact that a nonsigning inventor is on vacation or out of town and is therefore temporarily unavailable to sign the declaration is not an acceptable reason for filing under 37 C.F.R. §1.47.
>
> Furthermore, the fact that an inventor is hospitalized and/or is not conscious is not an acceptable reason for filing under 37 C.F.R. §1.47. 37 C.F.R. §1.43 may be available under these circumstances. See MPEP §409.02. Such a petition under 37 C.F.R. §1.47 will be dismissed as inappropriate.
>
> The statement of facts must be signed, where at all possible, by a person having firsthand knowledge of the facts recited therein. Statements based on hearsay will not normally be accepted. Copies of documentary evidence such as internet searches, certified mail return receipts, cover letters of instructions, telegrams, that support a finding that the nonsigning inventor could not be found or reached should be made part of the statement. The steps taken to locate the whereabouts of the nonsigning inventor should be included statement of facts. It is important that the statement contain facts as opposed to conclusions.
>
> REFUSAL TO JOIN
>
> A refusal by an inventor to sign an oath or declaration when the inventor has not

been presented with the application papers does not itself suggest that the inventor is refusing to join the application unless it is clear that the inventor understands exactly what he or she is being asked to sign and refuses to accept the application papers. A copy of the application papers should be sent to the last known address of the nonsigning inventor, or, if the nonsigning inventor is represented by counsel, to the address of the nonsigning inventor's attorney. The fact that an application may contain proprietary information does not relieve the 37 C.F.R. §1.47 applicant of the responsibility to present the application papers to the inventor if the inventor is willing to receive the papers in order to sign the oath or declaration. It is noted that the inventor may obtain a complete copy of the application, unless the inventor has assigned his or her interest in the application, and the assignee has requested that the inventor not be permitted access. See MPEP §106. It is reasonable to require that the inventor be presented with the application papers before a petition under 37 C.F.R. §1.47 is granted since such a procedure ensures that the inventor is apprised of the application to which the oath or declaration is directed. In re Gray, 115 USPQ 80 (Comm'r Pat. 1956).

Where a refusal of the inventor to sign the application papers is alleged, the circumstances of the presentation of the application papers and of the refusal must be specified in a statement of facts by the person who presented the inventor with the application papers and/or to whom the refusal was made. Statements by a party not present when an oral refusal is made will not be accepted.

Proof that a bona fide attempt was made to present a copy of the application papers (specification, including claims, drawings, and oath or declaration) to the nonsigning inventor for signature, but the inventor refused to accept delivery of the papers or expressly stated that the application papers should not be sent, may be sufficient.

When there is an express oral refusal, that fact along with the time and place of the refusal must be stated in the statement of facts. When there is an express written refusal, a copy of the document evidencing that refusal must be made part of the statement of facts. The document may be redacted to remove material not related to the inventor's reasons for refusal.

When it is concluded by the 37 C.F.R. §1.47 applicant that a nonsigning inventor's conduct constitutes a refusal, all facts upon which that conclusion is based should be stated in the statement of facts in support of the petition or directly in the petition. If there is documentary evidence to support facts alleged in the petition or in any statement of facts, such evidence should be submitted. Whenever a nonsigning inventor gives a reason for refusing to sign the application oath or declaration, that reason should be stated in the petition.

Thus, not only must a copy of the entire application must be sent to the last known address of the non-signing inventor (or the estate representative) with a request that he/she sign the declaration for the patent application–and evidence of that transmittal submitted–but also a reasonable effort must be made to ascertain a current or last known address, and the petition (with fee) must state over the signature and registration number of the Petitioner the last known address and, if appropriate, evidence of the due diligence effort ascertaining same.

Alternatively, an oath or declaration for the patent application in compliance with 37 C.F.R. §§1.63 and 1.64 must be presented.

(The declaration must set forth the inventor's residence, citizenship and post office address. An oath or declaration in compliance with 37 C.F.R. §§1.63 and 1.64 signed by the Rule 1.47 applicant is required.[2])

CONCLUSION

As always, the Rule requires support for the averment of transmittal of the entire application (description, claims, abstract and drawings) to the non-signing inventor to/at current/valid (or at least reasonably last-known/ascertainable) address. The evidence of these requirements (*inter alia*, a copy of the transmittal letter) should be submitted, of course, with any renewed petition–and Petitioner should review the Background section, above, to ensure that all matters raised therein have been addressed.

Therefore, the instant petition hereby is **dismissed**.

Further correspondence with respect to this matter should be addressed as follows:[3]

By mail: Commissioner for Patents[4]
P.O. Box 1450
Alexandria, VA 22313-1450

---

[2] See: MPEP 409.03(b).

[3] On July 15, 2005, the Central Facsimile (FAX) Number changed from (703) 872-9306 to (571) 273-8300. Old number(s) no longer are in service and (571) 273-8300 is the only facsimile number recognized for centralized delivery. (For further information. see: http://www.uspto.gov/web/offices/pac/dapp/opla/preognotice/cfax062005.pdf .)

[4] To determine the appropriate addresses for other subject-specific correspondence, refer to the USPTO Web site at www.uspto.gov.

By FAX: IFW Formal Filings
(571) 273-8300
ATTN.: Office of Petitions

By hand: Mail Stop: Petition
Customer Service Window
Randolph Building
401 Dulany Street
Alexandria, VA 22314

While telephone inquiries regarding this decision may be directed to the undersigned at (571) 272-3214, it is noted that all practice before the Office is in writing (see: 37 C.F.R. §1.2[10]) and the proper authority for action on any matter in this regard are the statutes (35 U.S.C.), regulations (37 C.F.R.) and the commentary on policy (MPEP). Therefore, no telephone discussion may be controlling or considered authority for Petitioner's action(s).

John J. Gillon, Jr.
Senior Attorney
Office of Petitions

[10] The regulations at 37 C.F.R. §1.2 provide:
§1.2 Business to be transacted in writing.
All business with the Patent and Trademark Office should be transacted in writing.The personal attendance of applicants or their attorneys or agents at the Patent and Trademark Office is unnecessary. The action of the Patent and Trademark Office will be based exclusively on the written record in the Office. No attention will be paid to any alleged oral promise, stipulation,or understanding in relation to which there is disagreement or doubt.

UNITED STATES PATENT AND TRADEMARK OFFICE

UNITED STATES DEPARTMENT OF COMMERCE
United States Patent and Trademark Office
Address: COMMISSIONER FOR PATENTS
P.O. Box 1450
Alexandria, Virginia 22313-1450
www.uspto.gov

THE WEBB LAW FIRM, P.C.
700 KOPPERS BUILDING
436 SEVENTH AVENUE
PITTSBURGH, PA 15219

Mail Date: 04/21/2010

Applicant	: Kazuhiro Honda	: DECISION ON REQUEST FOR
Patent Number	: 7605378	: RECALCULATION of PATENT
Issue Date	: 10/20/2009	: TERM ADJUSTMENT IN VIEW
Appliction No	: 11/585,049	: OF WYETH AND NOTICE OF INTENT TO
Filed	: 10/23/2006	: ISSUE CERTIFICATE OF CORRECTION
		:

The Request for Recalculation is **GRANTED** to the extent indicated.

The patent term adjustment has been determined to be **323** days. The USPTO will *sua sponte* issue a certificate of correction reflecting the amount of PTA days determined by the recalculation.

Prior to the issuance of the certificate of correction, the USPTO will afford patentee an opportunity to be heard and request reconsideration. Accordingly, patentee has **one month or thirty (30) days**, whichever is longer, to file a request for reconsideration of this patent term adjustment calculation. See 35 U.S.C. 154(b)(3)(B)(ii) and 37 CFR 1.322(a)(4). No extensions of time will be granted under 37 CFR 1.136.

Patentee should use document code PET.OP if electronically filing a request for reconsideration of this patent term adjustment calculation. The patentee must also include the information required by 37 CFR 1.705(b)(2) and the fee required by 37 CFR 1.18(e). If patentee does not file a timely request for reconsideration of this patent term adjustment calculation including the information required by 37 CFR 1.705(b)(2) and the fee required by 37 CFR 1.18(e), the USPTO will issue a certificate of correction reflecting the PTA determination noted above.

Patentee should be aware that in order to preserve the right to review in the United States District Court for the District of Columbia of the USPTO patent term adjustment determination, patentee must ensure that he or she also take the steps required under 35 U.S.C. 154(b)(4)(A) in a timely manner. Nothing in the request for recalculation should be construed as providing an alternative time frame for commencing a civil action under 35 U.S.C. 154(b)(4)(A).

Any questions concerning this decision should be directed to the Office of Patent Legal Administration at 571-272-7702.

UNITED STATES PATENT AND TRADEMARK OFFICE

Commissioner for Patents
United States Patent and Trademark Office
P.O. Box 1450
Alexandria, VA 22313-1450
www.uspto.gov

MAILED
FROM DIRECTOR'S OFFICE

DEC 13 2006

TECHNOLOGY CENTER 3600

Boyle, Fredrickson, Newholm, Stein & Gratz, S.C.
Suite 1030
250 East Wisconsin Avenue
Milwaukee, WI 53202

In re application of
William H. Punzel et al.
Application No. 11/585,069
Filed: October 23, 2006
For: LOCKING DOOR SYSTEM FOR A STORAGE CABINET

DECISION ON PETITION TO MAKE SPECIAL FOR NEW APPLICATION UNDER 37 CFR 1.102

This is a decision on the renewed petition filed on October 23, 2006 to make the above-identified application special for accelerated examination procedure under 37 C.F.R. § 1.102(d).

The petition to make the application special is **DENIED**.

REGULATION AND PRACTICE

A grantable petition to make special under 37 C.F.R. § 1.102(d) and pursuant to the "Change to Practice for Petitions in Patent Applications to Make Special and for Accelerated Examination" published in the Federal Register on June 26, 2006 (71 Fed. Reg. 36323), must satisfy the following conditions:

I. Conditions Regarding the Application:

1. the application must be a non-reissue utility or design application filed under 37 CFR 1.111(a);

2. the application, the petition and the required fees must be filed electronically using the USPTO's electronic filing system (EFS), or EFS-web; if not filed electronically, a statement asserting that EFS and EFS-web were not available during the normal business hours.

3. at the time of filing, the application must be complete under 37 CFR 1.51 and in condition for examination;

4. the application must contain three or fewer independent claims and twenty or fewer total claims and the claims must be directed to a single invention.

II. Conditions Regarding the Petition:

The petition must:

1. be filed with the application;

2. include a statement that applicant agrees not to separately argue the patentability of any independent claim during any appeal in the application;

3. include a statement that applicant agrees to make an election without traverse in a telephone interview.

4. include a statement that applicant agrees to conduct such an interview when requested by the examiner.

5. include a statement, made based on a good faith belief, that a preexamination search in compliance with the following requirements, was conducted, including an identification of the field of search by United States class and subclass, where applicable, and for database searches, the search logic or chemical structure or sequence used as a query, the name of the file(s) searched and the database service, and the date of the search.

The preexamination search must:

5.1 involve U.S. patents and patent application publications, foreign patent documents, and non-patent literature, unless the applicant can justify with reasonable certainty that no references more pertinent than those already identified are likely to be found in the eliminated sources and includes such a justification with this statement;

5.2. be directed to the claimed invention and encompass all of the features of the claims, giving the claims the broadest reasonable expectation;

5.3. encompass the disclosed features that may be claimed.

6. must provide in support of the petition an accelerated examination support document.

An accelerated examination support document must include:

6.1. an information disclosure statement (IDS) in compliance with 37 CFR 1.98 citing each reference deemed most closely related to the subject matter of each of the claims;

6.2. an identification of all the limitations in the claims that are disclosed by the reference specifying where the limitation is disclosed in the cited reference;

6.3. a detailed explanation of how each of the claims are patentable over the references cited with particularity required by 37 CFR 1.111(b) and (c);

6.4. a concise statement of the utility of the invention as defined in each of the independent claims (unless the application is a design application);

6.5. a showing of where each limitation of the claims finds support under 35 USC 112, first paragraph, in the written description of the specification. If applicable, the showing must also identify: (1) each means- (or step) plus-function claim element that invokes consideration under 35 UDC 112, sixth paragraph; and (2) the structure, material, or acts in the specification that corresponds to each means- (or step) plus-function claim element that invokes consideration under 35 UDC 112, sixth paragraph; if the application claims the benefit of one or more applications under title 35, United States Code, the showing must also include

where each limitation of the claims finds support under 35 USC 112, first paragraph, in each such application in which such supports exists;
6.6. an identification of any cited references that may be disqualified under 35 USC 103(c).

REVIEW OF FACTS

The petition to make special under 37 C.F.R. § 1.102(d) is not acceptable because it was not filed with the application as required in the above Federal Register Notice of June 26, 2006. It appears that the petition was filed under the guidelines for making an application special that were in effect prior to August 25, 2006. As of August 25, 2006 the new guidelines replaced the old guidelines. Since applicant's petition was received on October 23, 2006, the petition must be considered under the new guidelines.

As such, the petition fails to comply with conditions I.2, I.3, I.4, II.2, II.3, II.4, II.5, and II.6, above.

As to conditions I.2 – I.4, the application was not filed using (EFS) as required. And since the application was originally filed with 50 claims and required a preliminary amendment to reduce the claims to 20 or below, the application is not considered to be complete as filed.

As to condition II.5, the petition lacks an indication of a preexamination search that encompasses all of the features of the claims. The USPTO website has an example of the proper manner of performing and documenting a preexamination search for Accelerated Examination petitions at: http://www.uspto.gov/web/patents/accelerated/. The USPTO website has search templates that are broken down by class and subclass classification and provides a listing of the websites to be searched for NPL when dealing with claimed subject matter in those classifications at: http://www.uspto.gov/web/patents/searchtemplates/searchtemplates.htm.

As to condition II.6, there has not been a listing of all the limitations in each of the claims that are disclosed in each of the cited references, specifying where each of the limitations are disclosed in each of the references. The USPTO website has an example of the proper manner of documenting limitations taught by cited art for an Accelerated Examination Support Document at: http://www.uspto.gov/web/patents/accelerated/.

Therefore, the petition fails to meet the required conditions to be accorded special status under the accelerated examination procedure.

DECISION

For the above-stated reasons, the petition is **DENIED**. The application will therefore be taken up by the examiner for action in its regular turn.

Petitioner is given a single opportunity to perfect the petition. Any request for reconsideration of this decision must be submitted within 1 (one) month or 30 (thirty) days, whichever is longer, (no extension of time under 37 CFR 1.136(a)) from the date of this decision in order to be considered timely. Any request for reconsideration must address the deficiencies indicated above.

Petitioner is reminded that, upon granting of the special status of the application on request for reconsideration, the application will be processed expeditiously. However, due to the dismissal of the instant petition, examination may not be completed within twelve months of the filing date of the application.

Any inquiry regarding this decision should be directed to Steven N. Meyers, Special Program Examiner, at (571) 272-6611.

Steven N. Meyers,
Quality Assurance Specialist
Technology Center 3600

Sm/sm: 12/10/06

UNITED STATES PATENT AND TRADEMARK OFFICE

Commissioner for Patents
United States Patent and Trademark Office
P.O. Box 1450
Alexandria, VA 22313-1450
www.uspto.gov

MAILED
FROM DIRECTOR'S OFFICE

MAR 06 2008

TECHNOLOGY CENTER 3600

Boyle Fredrickson, S.C.
840 North Plankinton Avenue
Milwaukee, WI 53203

In re application of William H. Punzel et al. Application No. 11/585,069 Filed: October 23, 2006 For: LOCKING DOOR SYSTEM FOR A STORAGE CABINET	:	**DECISION ON REQUEST TO PARTICIPATE IN PATENT PROSECUTION HIGHWAY PROGRAM AND PETITION TO MAKE SPECIAL UNDER 37 CFR 1.102(d)**

This is a decision on the request to participate in the Patent Prosecution Highway (PPH) program and the petition under 37 CFR 1.102(d), filed December 21, 2007, to make the above-identified application special.

The request and petition are **DISMISSED as MOOT**.

A grantable request to participate in the PPH pilot program and petition to make special require:

(1) The U.S. application must validly claim priority under 35 U.S.C. 119(a) to one or more applications filed in the UKIPO;
(2) Applicant must submit a copy of the allowable/patentable claim(s) from the UKIPO application(s);
(3) All the claims in the U.S. application must sufficiently correspond or be amended to sufficiently correspond to the allowable/patentable claim(s) in the UKIPO application(s);
(4) Examination of the U.S. application has not begun;
(5) Applicant must submit a copy of the latest Office action from each of the UKIPO application(s) containing the allowable/patentable claim(s);
(6) Applicant must submit an IDS listing the documents cited by the UKIPO examiner in the UKIPO Office action along with copies of documents except U.S. patents or U.S. patent application publications; and
(7) The required petition fee under 37 CFR 1.17(h).

- The request to participate in the PPH pilot is not grantable as per item (4) above in that examination of the U.S. application has already begun. A non-final rejection was mailed July 20, 2007.

No time period for reply to this decision is available since an Office action on the merits has already been mailed.

Any inquiry regarding this decision should be directed to Steven N. Meyers, Quality Assurance Specialist, at (571) 272-6611.

Steven N. Meyers,
Quality Assurance Specialist
Technology Center 3600

Sm: 3/4/08

UNITED STATES PATENT AND TRADEMARK OFFICE

Commissioner for Patents
United States Patent and Trademark Office
P.O. Box 1450
Alexandria, VA 22313-1450
www.uspto.g

BOYLE FREDRICKSON S.C.
840 NORTH PLANKINTON AVENUE
MILWAUKEE, WI 53203

COPY MAILED
AUG 07 2008

In re Application of	:	
Punzel et al.	:	
Application No. 11/585,069	:	DECISION ON PETITION
Filed: October 23. 2006	:	
Attorney Docket No. 353.368	:	

This is a decision on the petition under the unintentional provisions of 37 CFR 1.137(b), filed July 17, 2008 (previously submitted on April 11, 2008) to revive the above-identified application.

The petition is **GRANTED**.

The application became abandoned for failure to reply in a timely manner to the non-final Office action mailed July 20, 2007, which set a shortened statutory period for reply of three (3) months. No extensions of time under the provisions of 37 CFR 1.136(a) were obtained. Accordingly, the application became abandoned on October 21, 2007. A Notice of Abandonment was mailed February 14, 2008.

The petition satisfies the requirements of 37 CFR 1.137(b) in that petitioner has supplied (1) the reply in the form of an Amendment, (2) the petition fee of $770.00, and (3) an adequate statement of unintentional delay.

Telephone inquiries concerning this decision should be directed to Joan Olszewski at (571) 272-7751.

This application is being referred to Technology Center AU 3637 for appropriate action by the Examiner in the normal course of business on the reply received.

Liana Walsh
Petitions Examiner
Office of Petitions

UNITED STATES PATENT AND TRADEMARK OFFICE

Commissioner for Patents
United States Patent and Trademark Office
P.O. Box 1450
Alexandria, VA 22313-1450
www.uspto.gov

Date : November 23, 2009

Patent No. :7516900
Inventor(s) :11/585102
Issued :April 14, 2009
Title :DATA CARRIER

Re: Request for Certificate of Correction

Consideration has been given your request for the issuance of a certificate of correction for the above-identified patent under the provisions of 37 CFR 1.322 and/or 1.323.

Assignees' names and addresses (assignment data) printed in a patent are based *solely* on information supplied in the appropriate space for identifying the assignment data, i.e., item 3 of the Fee(s) Transmittal Form PTOL-85B. After payment of the issue fee, correction of assignment data submitted on the PTOL-85B can only be done by Certificate of Correction under 37 CFR 1.323, with a request under 37 CFR 3.81(b).

A request for a patent to be corrected to state the name of the assignee must:

A. state that the assignment was submitted for recordation as set forth in 37 CFR 3.11 before issuance of the patent;

B. include a request for a certificate of correction under 37 CFR 1.323 along with the fee set forth in 37 CFR 1.20(a); and

C. include the processing fee set forth in 37 CFR 1.17(i).

If the request is granted, Certificates of Correction Branch will be notified that a Certificate of Correction may be issued.

See Manual of Patent Examining Procedure, Section 1481.01 (Rev. 3) (Oct. 2005).

Applicant has not included items A and or C above, accordingly, the request for Certificate of Correction to add or change the assignee data is dismissed.

Any request under 37 CFR 3.81(b) should be directed to the following address or facsimile number:

By mail: Mail Stop PETITIONS
Commissioner for Patents
Post Office Box 1450
Alexandria, VA 22313-1450

By hand: Customer Service Window
Randolph Building
401 Dulany Street
Alexandria, VA 22314

By fax: 571-273-8300
ATTN: Office of Petitions

EFS web uspto.gov/ebc/index.html
(must be registered as an e-filer to submit responses)
Technical Support 1-866-217-9197

Any inquiry concerning this communication should be directed to Ms. A. Green at (703) 756-1541.

Mary Diggs, Supervisor
Decisions & Certificates
of Correction Branch
(703) 756-1580 or (703) 756-1541

James T. Eller, Jr.
Birch, Stewart, Kolasch & Birch, LLP
8110 Gatehouse Road
Suite 100 East
P.O. Box 747
Falls Church, VA 22010-0747

/arg

UNITED STATES PATENT AND TRADEMARK OFFICE

Commissioner for Patents
United States Patent and Trademark Office
P.O. Box 1450
Alexandria, VA 22313-1450
www.uspto.gov

BIRCH STEWART KOLASCH & BIRCH
PO BOX 747
FALLS CHURCH VA 22040-0747

COPY MAILED
FEB 26 2010

In re Patent No. 7,516,900	:	
Application No. 11/585,102	:	
Filed: October 24, 2006	:	ON PETITION
Issued: April 14, 2009	:	
Attorney Docket No. 4078-0120PUS1	:	

This is a decision on the petition filed December 14, 2009, which is being treated as a request under 37 CFR 3.81(b)[1] to remove the name of the assignee on the front page of the above-identified patent by way of a Certificate of Correction.

The request is **GRANTED**.

This matter is being forwarded to the Certificates of Correction Branch for issuance of the requested Certificate of Correction.

Telephone inquiries concerning this decision may be directed to the undersigned at (571) 272-3206. Inquiries regarding the issuance of a certificate of correction should be directed to the Certificate of Correction Branch at (571) 272-4200.

Liana Walsh
Petitions Examiner
Office of Petitions

[1] *See* MPEP 1309, subsection II; and Official Gazette of June 22, 2004.

UNITED STATES PATENT AND TRADEMARK OFFICE

UNITED STATES DEPARTMENT OF COMMERCE
United States Patent and Trademark Office
Address: COMMISSIONER FOR PATENTS
P.O. Box 1450
Alexandria, Virginia 22313-1450
www.uspto.gov

APPLICATION NO.	FILING DATE	FIRST NAMED INVENTOR	ATTORNEY DOCKET NO.	CONFIRMATION NO.
11/585,116	10/24/2006	Atsushi Tano	11-386W	7469

7590 06/16/2009
POSZ LAW GROUP, PLC
12040 SOUTH LAKES DRIVE
SUITE 101
RESTON, VA 20191

EXAMINER
FRANKLIN, JAMARA ALZAIDA

ART UNIT	PAPER NUMBER
2876	

MAIL DATE	DELIVERY MODE
06/16/2009	PAPER

DECISION GRANTING PETITION UNDER 37 CFR 1.138(d)

The declaration of express abandonment is recognized

This is in response to the petition under 37 CFR 1.138(d), requesting for a refund of any previously paid search fee and excess claims fee in the above-identified application.

The petition is granted.

The express abandonment is recognized. Any previously paid search fee and excess claims fee are hereby refunded.

Telephone inquiries should be directed to the Office of Data Management at (571) 272-4200.

Betty Powell
Patent Publication Branch
Office of Data Management

Refund Ref: 06/16/2009 BPOWELL 000/033900
DAN:501147 Name/Number:11585116
FC: 9204 $500.00 CR

Adjustment date: 06/16/2009 BPOWELL
10/25/2006 SFELEKE1 00000020 11585116
02 FC:1111 -500.00 OP

FORM PET651G (Rev. 08/07)

Replp. Ref: 06/16/2009 BPOWELL 0007033900
DA#:501147 Name/Number:11585116
FC: 9204 $500.00 CR

UNITED STATES PATENT AND TRADEMARK OFFICE

UNITED STATES DEPARTMENT OF COMMERCE
United States Patent and Trademark Office
Address: COMMISSIONER FOR PATENTS
P.O. Box 1450
Alexandria, Virginia 22313-1450
www.uspto.gov

NIXON & VANDERHYE P.C.
901 NORTH GLEBE ROAD, 11TH FLOOR
ARLINGTON, VA 22203

Mail Date: 04/20/2010

Applicant	: John Erbes	: DECISION ON REQUEST FOR
Patent Number	: 7627074	: RECALCULATION of PATENT
Issue Date	: 12/01/2009	: TERM ADJUSTMENT IN VIEW
Appliction No	: 11/585,183	: OF WYETH AND NOTICE OF INTENT TO
Filed	: 10/24/2006	: ISSUE CERTIFICATE OF CORRECTION
		:

The Request for Recalculation is **GRANTED** to the extent indicated.

The patent term adjustment has been determined to be **218** days. The USPTO will *sua sponte* issue a certificate of correction reflecting the amount of PTA days determined by the recalculation.

Prior to the issuance of the certificate of correction, the USPTO will afford patentee an opportunity to be heard and request reconsideration. Accordingly, patentee has **one month or thirty (30) days**, whichever is longer, to file a request for reconsideration of this patent term adjustment calculation. See 35 U.S.C. 154(b)(3)(B)(ii) and 37 CFR 1.322(a)(4). No extensions of time will be granted under 37 CFR 1.136.

Patentee should use document code PET.OP if electronically filing a request for reconsideration of this patent term adjustment calculation. The patentee must also include the information required by 37 CFR 1.705(b)(2) and the fee required by 37 CFR 1.18(e). If patentee does not file a timely request for reconsideration of this patent term adjustment calculation including the information required by 37 CFR 1.705(b)(2) and the fee required by 37 CFR 1.18(e), the USPTO will issue a certificate of correction reflecting the PTA determination noted above.

Patentee should be aware that in order to preserve the right to review in the United States District Court for the District of Columbia of the USPTO patent term adjustment determination, patentee must ensure that he or she also take the steps required under 35 U.S.C. 154(b)(4)(A) in a timely manner. Nothing in the request for recalculation should be construed as providing an alternative time frame for commencing a civil action under 35 U.S.C. 154(b)(4)(A).

Any questions concerning this decision should be directed to the Office of Patent Legal Administration at 571-272-7702.

UNITED STATES PATENT AND TRADEMARK OFFICE

Commissioner for Patents
United States Patent and Trademark Office
P.O. Box 1450
Alexandria, VA 22313-1450
www.uspto.gov

EITAN LAW GROUP
c/o LANDONIP, INC.
1700 DIAGONAL ROAD
SUITE 450
ALEXANDRIA VA 22314

COPY MAILED

MAR 28 2007

OFFICE OF PETITIONS

In re Application of Uri Mirsky, Shimon Neftin, Lev Furer, Nina Sezin and Leonid Dukhovny Application No.11/585,255 Filed: October 24, 2006 Attorney Docket No. P-9264-US1 Title of Invention: Microelectronic Packaging and Components	DECISION GRANTING STATUS UNDER 37 CFR 1.47(A)

This is in response to the renewed petition under 37 CFR 1.47(a) filed February 13, 2007.

The petition is GRANTED.

Petitioner has shown that non-signing inventor Sezin has refused to join in the filing of the above-identified application after having been presented with the application papers. Petitioner has provided evidence of non-signing inventor's express refusal to execute the application papers.

The above-identified application and papers have been reviewed and found in compliance with 37 CFR 1.47(a). This application is hereby accorded Rule 1.47(a) status.

As provided in Rule 1.47(c), this Office will forward notice of this application's filing to the non-signing inventor at the address given in the petition. Notice of the filing of this application will also be published in the Official Gazette.

Pursuant to petitioner's request deposit account 50-3400 will be charged the $200.00 petition fee.

After this decision is mailed, the application will be forwarded to the Office of Initial Patent Examination for further processing.

Telephone inquiries regarding this communication should be directed to the undersigned at (571) 272-3215.

Charlema R. Grant

Charlema R. Grant
Petitions Attorney
Office of Petitions

UNITED STATES PATENT AND TRADEMARK OFFICE

Commissioner for Patents
United States Patent and Trademark Office
P.O. Box 1450
Alexandria, VA 22313-1450
www.uspto.gov

Nina Sezin
17 Ishaya Street, Apt. 7
Haifa 35072
Israel

COPY MAILED

MAR 2 8 2007

OFFICE OF PETITIONS

In re Application of
Uri Mirsky, Shimon Neftin, Lev Furer, Nina Sezin and Leonid Dukhovny
Application No.11/585,255
Filed: October 24, 2006
Attorney Docket No. P-9264-US1
Title of Invention: Microelectronic Packaging and Components

: LETTER

Dear Ms. Sezin:

You are named as a joint inventor in the above-identified United States patent application filed under the provisions of 35 U.S.C. § 116 (United States Code) and 37 C.F.R. § 1.47(a), Rules of Practice in Patent Cases. Should a patent be granted on the application you will be designated therein as a joint inventor.

As a named inventor you are entitled to inspect any paper in the file wrapper of the application, order copies of all or any part thereof (at a prepaid cost as per 37 C.F.R. § 1.19) or make your position of record in the application. Alternatively, you may arrange to do any of the preceding through a registered patent attorney or agent presenting written authorization from you. If you care to join the application, counsel of record (see below) would presumably assist you. Joining in the application would entail the filing of an appropriate oath or declaration by you pursuant to 37 C.F.R. § 1.63.

Telephone inquiries regarding this communication should be directed to Petitions Attorney Charlema R. Grant at (571) 272-3215. Requests for information regarding your application should be directed to the File Information Unit at (703) 308-2733. Information regarding how to pay for and order a copy of the application, or a specific paper in the application, should be directed to Certification Division at (703) 308-9726 or 1-800-972-6382 (outside the Washington D.C. area).

Charlema R. Grant

Charlema R. Grant
Petitions Attorney
Office of Petitions

EITAN LAW GROUP
c/o LANDONIP, INC.
1700 DIAGONAL ROAD
SUITE 450
ALEXANDRIA VA 22314

ATTN: Allan C. Entis

UNITED STATES PATENT AND TRADEMARK OFFICE

UNITED STATES DEPARTMENT OF COMMERCE
United States Patent and Trademark Office
Address: COMMISSIONER FOR PATENTS
P.O. Box 1450
Alexandria, Virginia 22313-1450
www.uspto.gov

DICKSTEIN SHAPIRO LLP
1825 EYE STREET, NW
WASHINGTON, DC 20006

Mail Date: 04/21/2010

Applicant	: Kristy A. Campbell	: DECISION ON REQUEST FOR
Patent Number	: 7646007	: RECALCULATION of PATENT
Issue Date	: 01/12/2010	: TERM ADJUSTMENT IN VIEW
Appliction No	: 11/585,259	: OF WYETH AND NOTICE OF INTENT TO
Filed	: 10/24/2006	: ISSUE CERTIFICATE OF CORRECTION
		:

The Request for Recalculation is **GRANTED** to the extent indicated.

The patent term adjustment has been determined to be **197** days. The USPTO will *sua sponte* issue a certificate of correction reflecting the amount of PTA days determined by the recalculation.

Prior to the issuance of the certificate of correction, the USPTO will afford patentee an opportunity to be heard and request reconsideration. Accordingly, patentee has **one month or thirty (30) days**, whichever is longer, to file a request for reconsideration of this patent term adjustment calculation. See 35 U.S.C. 154(b)(3)(B)(ii) and 37 CFR 1.322(a)(4). No extensions of time will be granted under 37 CFR 1.136.

Patentee should use document code PET.OP if electronically filing a request for reconsideration of this patent term adjustment calculation. The patentee must also include the information required by 37 CFR 1.705(b)(2) and the fee required by 37 CFR 1.18(e). If patentee does not file a timely request for reconsideration of this patent term adjustment calculation including the information required by 37 CFR 1.705(b)(2) and the fee required by 37 CFR 1.18(e), the USPTO will issue a certificate of correction reflecting the PTA determination noted above.

Patentee should be aware that in order to preserve the right to review in the United States District Court for the District of Columbia of the USPTO patent term adjustment determination, patentee must ensure that he or she also take the steps required under 35 U.S.C. 154(b)(4)(A) in a timely manner. Nothing in the request for recalculation should be construed as providing an alternative time frame for commencing a civil action under 35 U.S.C. 154(b)(4)(A).

Any questions concerning this decision should be directed to the Office of Patent Legal Administration at 571-272-7702.

SPE RESPONSE FOR CERTIFICATE OF CORRECTION

Paper No.: _____

DATE : 03/03/10

TO SPE OF : ART UNIT 2815

SUBJECT : Request for Certificate of Correction for Appl. No.: 11585259 Patent No.: 7646007

Please respond to this request for a certificate of correction within 7 days.

FOR IFW FILES:

Please review the requested changes/corrections as shown in the **COCIN** document(s) in the IFW application image. No new matter should be introduced, nor should the scope or meaning of the claims be changed.

Please complete the response (see below) and forward the completed response to scanning using document code **COCX**.

FOR PAPER FILES:

Please review the requested changes/corrections as shown in the attached certificate of correction. Please complete this form (see below) and forward it with the file to:

Certificates of Correction Branch (C of C)
Randolph Square 9D40-D
Palm Location 7580
You can fax the Directors/SPE response to 571-270-9990

Lamonte Newsome
Certificates of Correction Branch
703-756-1574

Thank You For Your Assistance

The request for issuing the above-identified correction(s) is hereby:
Note your decision on the appropriate box.

x Approved	**All** changes apply.
☐ **Approved in Part**	Specify below which changes **do not** apply.
☐ **Denied**	State the reasons for denial below.

Comments: _____

/Kenneth Parker/
GAU 2815

SPE RESPONSE FOR CERTIFICATE OF CORRECTION

SPE

Art Unit

UNITED STATES PATENT AND TRADEMARK OFFICE

Commissioner for Patents
United States Patent and Trademark Office
P.O. Box 1450
Alexandria, VA 22313-1450
www.uspto.gov

VOLENTINE FRANCOS, & WHITT PLLC
ONE FREEDOM SQUARE
11951 FREEDOM DRIVE SUITE 1260
RESTON VA 20190

JAN 0 3 2007

In re Application of: RILEY Serial No.: 11/585,263 Filed: October 24, 2006 Title: UNDER VEHICLE INSPECTION SYSTEM	DECISION ON PETITION TO MAKE SPECIAL FOR NEW APPLICATION UNDER 37 C.F.R. § 1.102 & M.P.E.P. § 708.02

This is a decision on the petition filed on November 15, 2006 to make the above-identified application special for accelerated examination procedure under 37 C.F.R. § 1.102(d).

The petition to make the application special is **DENIED**.

REGULATION AND PRACTICE

To be eligible for accelerated examination under 37 C.F.R. § 1.102(d) and pursuant to the "Change to Practice for Petitions in Patent Applications to Make Special and for Accelerated Examination" published in the Federal Register on June 26, 2006 (71 Fed. Reg. 36323), the following conditions must be satisfied:

1. The application must be a non-reissue utility or design application filed under 37 CFR 1.111(a);
2. The application, the petition and the required fees must be filed electronically using the USPTO's electronic filing system (EFS), or EFS-web; if not filed electronically, a statement asserting that EFS and EFS-web were not available during the normal business hours;
3. The application, at the time of filing, must be complete under 37 CFR 1.51 and in condition for examination;
4. The application must contain three or fewer independent claims and twenty or fewer total claims and the claims must be directed to a single invention.
5. The petition must be filed with the application.

The application as filed is not eligible for the accelerated examination under 37 C.F.R. § 1.102(d) because the petition was not filed with the application. As noted in the policy statement referenced above, any petition to make special filed on or after the effective date must meet the new requirements set forth in the 71 Fed. Reg. 36323 notice. Applications filed before

the effective date will not be eligible for the revised accelerated examination program. The effective date of the change in practice was August 25, 2006. Thus the instant petition must be reviewed under the revised practice and the instant application is ineligible.

The petition appears on its face to have been filed without recognition of the August 25, 2006 policy change to the petition to make special program. The changes to the program are substantial. A copy of Federal Register on June 26, 2006 (71 Fed. Reg. 36323) is being attached to the mailed decision for petitioner's review. Further guidance may be found at www.USPTO.gov under the accelerated examination link.

For the above-stated reasons, the petition is **DENIED**. The application will therefore be taken up by the examiner for action in its regular turn.

Any inquiry regarding this decision should be directed to J. Harrison, TC 3700 Special Program Examiner, at (571) 272-4449.

J. Harrison
Special Program Examiner
Technology Center 3700

UNITED STATES PATENT AND TRADEMARK OFFICE

Commissioner for Patents
United States Patent and Trademark Office
P.O. Box 1450
Alexandria, VA 22313-1450
www.uspto.gov

TESSERA
LERNER DAVID et al.
600 SOUTH AVENUE WEST
WESTFIELD NJ 07090

COPY MAILED

AUG 0 3 2007

OFFICE OF PETITIONS

In re Application of:	:	
Sakuma et al.	:	DECISION GRANTING
Application No. 11/585287	:	PETITION UNDER
Filing or 371(c) Date: 10/23/2006	:	37 CFR 1.47(a)
Title of Invention:	:	
APPARATUS AND METHOD FOR	:	
DISTRIBUTING A LIQUID ONTO A	:	
SURFACE OF AN ITEM	:	

This Decision is in response to the Petition Under 37 CFR 1.47(a)," filed June 7, 2007, to allow the other inventor(s) to proceed with the application on behalf of himself or herself and the nonsigning inventor(s). See, MPEP 409.03.

The petition is **granted**.

The above-identified application and papers have been reviewed and found in compliance with 37 CFR 1.47(a). This application is hereby accorded Rule 1.47(a) status.

Petitioner has shown that the non-signing inventor, Kiyoshi Hyodo, refuses to join in the application.

As provided in Rule 1.47(a), this Office will forward notice of this application's filing to the non-signing inventor at the addresses given in the Petition. Notice of the filing of this application will also be published in the Official Gazette.

The application file is being referred to Technology Center Art Unit 1765 for examination in due course.

Telephone inquiries related to this decision may be directed to the undersigned at (571) 272-3232.

Derek L. Woods
Attorney
Office of Petitions

UNITED STATES PATENT AND TRADEMARK OFFICE

Commissioner for Patents
United States Patent and Trademark Office
P.O. Box 1450
Alexandria, VA 22313-1450
www.uspto.gov

MR. KIYOSHI HYODO
C/O NORTH CORPORATION
32-1, MINAMI-OTSUKA 3-CHONE
TOSHIMA-KU TOKYO
JAPAN 170-0005

COPY MAILED

AUG 0 3 2007

OFFICE OF PETITIONS

In re Application of:	:	
Sakuma et al.	:	LETTER
Application No. 11/585287:	:	
Filing or 371(c) Date: 10/23/2006	:	
Title of Invention:	:	
APPARATUS AND METHOD FOR DISTRIBUTING	:	
A LIQUID ONTO A SURFACE OF AN ITEM	:	

Dear Mr. HYODO:

You are named as a joint inventor in the above-identified United States patent application filed under the provisions of 35 U.S.C. 116 (United States Code) and 37 CFR 1.47(a), Rules of Practice in Patent Cases. Should a patent be granted on the application you will be designated therein as a joint inventor.

As a named inventor you are entitled to inspect any paper in the file wrapper of the application, order copies of all or any part thereof (at a prepaid cost per 37 CFR 1.19) or make your position of record in the application. Alternatively, you may arrange to do any of the preceding through a registered patent attorney or agent presenting written authorization from you. If you care to join the application, counsel of record (see below) would presumably assist you. Joining in the application would entail the filing of an appropriate oath or declaration by you pursuant to 37 CFR 1.63.

Telephone inquiries regarding this communication should be directed to the undersigned at (571) 272-3232. Requests for information regarding your application should be directed to the File Information Unit at (703) 308-2733. Information regarding how to pay for and order a copy of the application, or a specific paper in the application, should be directed to Certification Division at (703) 308-9726 or 1-800-972-6382 (outside the Washington D.C. area).

Derek L. Woods
Attorney
Office of Petitions

CC: TESSERA
LERNER DAVID et al.
600 SOUTH AVENUE WEST
WESTFIELD NJ 07090

UNITED STATES PATENT AND TRADEMARK OFFICE

Commissioner for Patents
United States Patent and Trademark Office
P.O. Box 1450
Alexandria, VA 22313-1450
www.uspto.gov

YAHOO! INC.
C/O OSTROW, KAUFMAN & FRANKL, LLP
THE CHRYSLER BUILDING
405 LEXINGTON AVENUE, 62ND FLOOR
NEW YORK, NY 10174

MAILED

SEP 11 2009

OFFICE OF PETITIONS

In re Application of	:	
Shyam Kapur	:	
Application No. 11/585,288	:	DECISION ON PETITION
Filed: October 23, 2006	:	
Attorney Docket No. 600189-452	:	

This is a decision on the petition, filed July 8, 2009, which is being treated as a petition under 37 CFR 1.8(b), requesting withdrawal of the holding of abandonment in the above-identified application.

The petition is **GRANTED**.

This application was held abandoned for failure to timely respond to the Office action of September 15, 2008, which set a three (3) month shortened statutory period for reply. Accordingly, a reply was due on or before December 15, 2008.

Petitioner states that a timely reply was timely filed via EFS Web with an electronically stamped certificate of filing of December 8, 2008, which included the following papers: amendment. Petitioner has submitted a copy of the previously mailed correspondence, which bears a electronically stamped certificate of filing dated December 8, 2008, which would have rendered the reply timely if received.

The file record does not include the originally submitted papers. Failure to receive correspondence which includes a certificate of mailing or certificate of facsimile transmission is addressed in 37 CFR 1.8(b), reproduced below:

> In the event that correspondence is considered timely filed by being mailed or transmitted in accordance with paragraph (a) of this section, but not received in the U.S. Patent and Trademark Office after a reasonable amount of time has elapsed from the time of mailing or transmitting of the correspondence, or after the application is held to be abandoned, or after the proceeding is

dismissed, terminated, or decided with prejudice, the correspondence will be considered timely if the party who forwarded such correspondence:

(1) Informs the Office of the previous mailing or transmission of the correspondence promptly after becoming aware that the Office has no evidence of receipt of the correspondence;

(2) Supplies an additional copy of the previously mailed or transmitted correspondence and certificate; and

(3) Includes a statement which attests on a personal knowledge basis or to the satisfaction of the Director to the previous timely mailing or transmission. If the correspondence was sent by facsimile transmission, a copy of the sending unit's report confirming transmission may be used to support this statement.

The petition satisfies the above requirements of 37 CFR 1.8(b). Accordingly, the holding of abandonment for failure to timely file a reply to the Office action of September 15, 2008 is hereby **withdrawn** and the application restored to pending status.

The copy of the reply received with the petition will be accepted in place of the reply shown to have been transmitted by facsimile on July 8, 2009.

Telephone inquiries concerning this decision should be directed to April M. Wise at 571-272-1642. All other inquiries concerning the examination or status of this application should be directed to the Technology Center.

This application is being referred to Technology Center AU 2159 for appropriate action in the normal course of business on the reply received with petition.

/dab/
David Bucci
Petitions Examiner
Office of Petitions

UNITED STATES PATENT AND TRADEMARK OFFICE

UNITED STATES DEPARTMENT OF COMMERCE
United States Patent and Trademark Office
Address: COMMISSIONER FOR PATENTS
P.O. Box 1450
Alexandria, Virginia 22313-1450
www.uspto.gov

BARRY W. CHAPIN, ESQ.
CHAPIN INTELLECTUAL PROPERTY LAW, LLC
WESTBOROUGH OFFICE PARK
1700 WEST PARK DRIVE, SUITE 280
WESTBOROUGH, MA 01581

Mail Date: 04/20/2010

Applicant	: Brian Riggs	: DECISION ON REQUEST FOR
Patent Number	: 7631260	: RECALCULATION of PATENT
Issue Date	: 12/08/2009	: TERM ADJUSTMENT IN VIEW
Appliction No	: 11/585,326	: OF WYETH AND NOTICE OF INTENT TO
Filed	: 10/23/2006	: ISSUE CERTIFICATE OF CORRECTION
		:

The Request for Recalculation is **GRANTED** to the extent indicated.

The patent term adjustment has been determined to be **196** days. The USPTO will *sua sponte* issue a certificate of correction reflecting the amount of PTA days determined by the recalculation.

Prior to the issuance of the certificate of correction, the USPTO will afford patentee an opportunity to be heard and request reconsideration. Accordingly, patentee has **one month or thirty (30) days**, whichever is longer, to file a request for reconsideration of this patent term adjustment calculation. See 35 U.S.C. 154(b)(3)(B)(ii) and 37 CFR 1.322(a)(4). No extensions of time will be granted under 37 CFR 1.136.

Patentee should use document code PET.OP if electronically filing a request for reconsideration of this patent term adjustment calculation. The patentee must also include the information required by 37 CFR 1.705(b)(2) and the fee required by 37 CFR 1.18(e). If patentee does not file a timely request for reconsideration of this patent term adjustment calculation including the information required by 37 CFR 1.705(b)(2) and the fee required by 37 CFR 1.18(e), the USPTO will issue a certificate of correction reflecting the PTA determination noted above.

Patentee should be aware that in order to preserve the right to review in the United States District Court for the District of Columbia of the USPTO patent term adjustment determination, patentee must ensure that he or she also take the steps required under 35 U.S.C. 154(b)(4)(A) in a timely manner. Nothing in the request for recalculation should be construed as providing an alternative time frame for commencing a civil action under 35 U.S.C. 154(b)(4)(A).

Any questions concerning this decision should be directed to the Office of Patent Legal Administration at 571-272-7702.

UNITED STATES PATENT AND TRADEMARK OFFICE

Commissioner for Patents
United States Patent and Trademark Office
P.O. Box 1450
Alexandria, VA 22313-1450
www.uspto.gov

BARRY W CHAPIN ESQ
CHAPIN INTELLECTUAL PROPERTY LAW LLC
WESTBOROUGH OFFICE PARK
1700 WEST PARK DRIVE SUITE 280
WESTBOROUGH MA 01581

MAILED

MAR 16 2009

OFFICE OF PETITIONS

In re Application of	:	
Schnepel, et al.	:	
Application No. 11/585,328	:	ON PETITION
Filed: October 23, 2006	:	
Attorney Docket No. ADO06-027(B376)	:	

This is a decision on the petition to revive under 37 CFR 1.137(a), filed February 4, 2009.

The petition under 37 CFR 1.137(a) is **GRANTED**.

The application was held abandoned due to failure to timely file a reply to the non-final Office action, mailed February 13, 2008. This Office action set a shortened statutory period for reply of three (3) months. No reply having been received, the application became abandoned on May 14, 2008. The Office mailed a Notice of Abandonment on September 11, 2008.

A grantable petition under 37 CFR 1.137(a) must be accompanied by: (1) the required reply, unless previously filed; (2) the petition fee as set forth in 37 CFR 1.17(l); (3) a showing to the satisfaction of the Commissioner that the entire delay in filing the required reply from the due date for the reply until the filing of a grantable petition pursuant to 37 CFR 1.137(a) was unavoidable; and (4) any terminal disclaimer (and fee as set forth in 37 CFR 1.20(d)) required pursuant to 37 CFR 1.137(d). Decisions on reviving abandoned applications on the basis of

"unavoidable" delay have adopted the reasonably prudent person standard in determining if the delay was unavoidable:

> The word 'unavoidable' . . . is applicable to ordinary human affairs, and requires no more or greater care or diligence than is generally used and observed by prudent and careful men in relation to their most important business. It permits them in the exercise of this care to rely upon the ordinary and trustworthy agencies of mail and telegraph, worthy and reliable employees, and such other means and instrumentalities as are usually employed in such important business. If unexpectedly, or through the unforeseen fault or imperfection of these agencies and instrumentalities, there occurs a failure, it may properly be said to be unavoidable, all other conditions of promptness in its rectification being present.[1]

Moreover, a petition cannot be granted where a petitioner has failed to meet his or her burden of establishing that the delay was "unavoidable."[2]

To establish nonreceipt of an Office action, a petitioner must: 1) include a statement that the Office action was not received; 2) attest to the fact that a search of the file jacket and docket records indicates that the Office action was not received; and 3) include a copy of the docket record where the nonreceived Office action would have been entered had it been received and docketed.[3] A proper docket report consists of a "docket record where the nonreceived Office action would have been entered had it been received and docketed."[4] "For example, if a three month period for reply was set in the nonreceived Office action, a copy of the docket record showing all replies docketed for a date three months from the mail date of the nonreceived Office action must be submitted..."[5]

---

[1] In re Mattullath, 38 App. D.C. 497, 514-15 (1912)(quoting Ex parte Pratt, 1887 Dec. Comm'r Pat. 31, 32-33 (1887)); see also Winkler v. Ladd, 221 F. Supp. 550, 552, 138 USPQ 666, 167-68 (D.D.C. 1963), aff'd, 143 USPQ 172 (D.C. Cir. 1963); Ex parte Henrich, 1913 Dec. Comm'r Pat. 139, 141 (1913).

[2] Haines v. Quigg, 673 F. Supp. 314, 316-17, 5 USPQ2d 1130, 1131-32 (N.D. Ind. 1987).

[3] See MPEP 711.03(c)(II).

[4] MPEP 711.03(c)(II) (emphasis added).

[5] Id.

With the instant petition, petitioner has submitted a copy of a master docket report, showing all of his replies docketed for a due date during the month of May. An entry for the instant application is absent, supporting the conclusion that the February 13, 2008 Office action was not received.

In view thereof, the petition is granted.

The application is being forwarded to Group Art Unit 2837 for consideration of the Amendment filed with the petition on February 4, 2009.

Telephone inquiries related to this decision should be directed to the undersigned at (571)272-3207.

Cliff Congo
Petitions Attorney
Office of Petitions

UNITED STATES PATENT AND TRADEMARK OFFICE

UNITED STATES DEPARTMENT OF COMMERCE
United States Patent and Trademark Office
Address: COMMISSIONER FOR PATENTS
P.O. Box 1450
Alexandria, Virginia 22313-1450
www.uspto.gov

BARRY W. CHAPIN, ESQ.
CHAPIN INTELLECTUAL PROPERTY LAW, LLC
WESTBOROUGH OFFICE PARK
1700 WEST PARK DRIVE, SUITE 280
WESTBOROUGH, MA 01581

Mail Date: 04/20/2010

Applicant	: Soenke Schnepel	: DECISION ON REQUEST FOR
Patent Number	: 7612279	: RECALCULATION of PATENT
Issue Date	: 11/03/2009	: TERM ADJUSTMENT IN VIEW
Appliction No	: 11/585,328	: OF WYETH AND NOTICE OF INTENT TO
Filed	: 10/23/2006	: ISSUE CERTIFICATE OF CORRECTION
		:

The Request for Recalculation is **GRANTED** to the extent indicated.

The patent term adjustment has been determined to be **63** days. The USPTO will *sua sponte* issue a certificate of correction reflecting the amount of PTA days determined by the recalculation.

Prior to the issuance of the certificate of correction, the USPTO will afford patentee an opportunity to be heard and request reconsideration. Accordingly, patentee has **one month or thirty (30) days**, whichever is longer, to file a request for reconsideration of this patent term adjustment calculation. See 35 U.S.C. 154(b)(3)(B)(ii) and 37 CFR 1.322(a)(4). No extensions of time will be granted under 37 CFR 1.136.

Patentee should use document code PET.OP if electronically filing a request for reconsideration of this patent term adjustment calculation. The patentee must also include the information required by 37 CFR 1.705(b)(2) and the fee required by 37 CFR 1.18(e). If patentee does not file a timely request for reconsideration of this patent term adjustment calculation including the information required by 37 CFR 1.705(b)(2) and the fee required by 37 CFR 1.18(e), the USPTO will issue a certificate of correction reflecting the PTA determination noted above.

Patentee should be aware that in order to preserve the right to review in the United States District Court for the District of Columbia of the USPTO patent term adjustment determination, patentee must ensure that he or she also take the steps required under 35 U.S.C. 154(b)(4)(A) in a timely manner. Nothing in the request for recalculation should be construed as providing an alternative time frame for commencing a civil action under 35 U.S.C. 154(b)(4)(A).

Any questions concerning this decision should be directed to the Office of Patent Legal Administration at 571-272-7702.

UNITED STATES PATENT AND TRADEMARK OFFICE

Commissioner for Patents
United States Patent and Trademark Office
P.O. Box 1450
Alexandria, VA 22313-1450
www.uspto.gov

INTERNATIONAL BUSINESS MACHINES CORPORATION
DEPT. 18G
BLDG. 321-482
2070 ROUTE 52
HOPEWELL JUNCTION, NY 12533

COPY MAILED
JAN 15 2010

In re Application of.	:	
Wagner et al.	:	
Application No. 11/585,361	:	NOTICE
Filed: October 23, 2006	:	
Attorney Docket No. FIS920030249US2	:	

This is a notice regarding your request for acceptance of a fee deficiency submission under 37 CFR 1.28.

The Office no longer investigates or rejects original or reissue patent under 37 CFR 1.56. **1098 Off. Gaz. Pat. Office 502 (January 3, 1989)**. Therefore, nothing in this Notice is intended to imply that an investigation was done.

Your fee deficiency submission under 37 CFR 1.28 is hereby **ACCEPTED**.

This patent application is no longer entitled to small entity status. Accordingly, all future fees paid in this application must be paid at the large entity rate.

Inquiries related to this communication should be directed to the undersigned at (571) 272-6059.

A. Kelley

Alicia Kelley
Petitions Examiner
Office of Petitions

SPE RESPONSE FOR CERTIFICATE OF CORRECTION

Paper No.: _____

DATE : 5/7/10

TO SPE OF : ART UNIT 1623 (1600)

SUBJECT : Request for Certificate of Correction for Appl. No.: 11/585,363 Patent No.: 7,666,855

Please respond to this request for a certificate of correction within 7 days.

FOR IFW FILES:

Please review the requested changes/corrections as shown in the **COCIN** document(s) in the IFW application image. No new matter should be introduced, nor should the scope or meaning of the claims be changed.

Please complete the response (see below) and forward the completed response to scanning using document code **COCX**.

FOR PAPER FILES:

Please review the requested changes/corrections as shown in the attached certificate of correction. Please complete this form (see below) and forward it with the file to:

Certificates of Correction Branch (CofC)
Randolph Square – 9D10-A
Palm Location 7580

Ernest C. White, LTE
Randolph Sq. Ste 9D62A
703-756-1590

Thank You For Your Assistance

The request for issuing the above-identified correction(s) is hereby:
Note your decision on the appropriate box.

XX Approved	**All** changes apply.
☐ **Approved in Part**	Specify below which changes **do not** apply.
☐ **Denied**	State the reasons for denial below.

The C of C has been approved.

SPE /S. A. Jiang/ **ART UNIT** 1623

UNITED STATES PATENT AND TRADEMARK OFFICE

Commissioner for Patents
United States Patent and Trademark Office
P.O. Box 1450
Alexandria, VA 22313-1450
www.uspto.gov

LATHROP & GAGE LLP
4845 PEARL EAST CIRCLE
SUITE 201
BOULDER CO 80301

COPY MAILED
JAN 15 2010

In re Application of	:	
Nie et al.	:	
Application No. 11/585,369	:	DECISION ON PETITION
Filed: October 24, 2006	:	
Attorney Docket No. 456083	:	

This is a decision on the petition under the unintentional provisions of 37 CFR 1.137(b), filed November 20, 2009, to revive the above-identified application.

The petition is **GRANTED**.

The application became abandoned for failure to reply in a timely manner to the non-final Office action mailed May 19, 2009, which set a shortened statutory period for reply of three (3) months. No extensions of time under the provisions of 37 CFR 1.136(a) were obtained. Accordingly, the application became abandoned on August 20, 2009. A Notice of Abandonment was mailed January 4, 2010.

The petition satisfies the requirements of 37 CFR 1.137(b) in that petitioner has supplied (1) the reply in the form of an Amendment, (2) the petition fee of $1,620.00, and (3) an adequate statement of unintentional delay.

It is not apparent whether the person signing the instant petition was ever given a power of attorney or authorization of agent to prosecute this patent. In accordance with 37 CFR 1.34(a), the signature appearing on the petition shall constitute a representation to the United States Patent and Trademark Office that he/she is authorized to represent the particular party in whose behalf he/she acts.

Telephone inquiries concerning this decision should be directed to the undersigned at (571) 272-7751.

This application is being referred to Technology Center AU 1796 for appropriate action by the Examiner in the normal course of business on the reply received.

Joan Olszewski
Petitions Examiner
Office of Petitions

UNITED STATES PATENT AND TRADEMARK OFFICE

Commissioner for Patents
United States Patent and Trademark Office
P.O. Box 1450
Alexandria, VA 22313-1450
www.uspto.gov

MAILED

APR 13 2009

OFFICE OF PETITIONS

KENYON & KENYON LLP
ONE BROADWAY
NEW YORK NY 10004

In re Application of	:	
HEATHER, Ashley et al.	:	
Application No. 11/585,410	:	DECISION ON PETITION
Filed: October 23, 2006	:	TO WITHDRAW
Attorney Docket No. **13725/5**	:	FROM RECORD
	:	

This is a decision on the Request to Withdraw as attorney or agent of record under 37 C.F.R. § 1.36(b), filed March 05, 2009.

The request is **APPROVED**.

A grantable request to withdraw as attorney/agent of record must be signed by every attorney/agent seeking to withdraw or contain a clear indication that one attorney is signing on behalf of another/others. The Office requires the practitioner(s) requesting withdrawal to certify that he, she, or they have: (1) given reasonable notice to the client, prior to the expiration of the response period, that the practitioner(s) intends to withdraw from employment; (2) delivered to the client or a duly authorized representative of the client all papers and property (including funds) to which the client is entitled; and (3) notified the client of any responses that may be due and the time frame within which the client must respond, pursuant 37 CFR 10.40(c).

The request was signed by Linda Lecomte on behalf of all attorneys of record who are associated with customer No. 26646. All attorneys/agents associated have been withdrawn. Applicant is reminded that there is no attorney of record at this time.

The request to change the correspondence address of record is not acceptable as the requested correspondence address is not that of: (1) the first named signing inventor; or (2) an intervening assignee of the entire interest under 37 C.F.R 3.71. All future communications from the Office will be directed to the first named signing inventor.

There is an outstanding Office action mailed December 29, 2008 that requires a reply from the applicant.

Telephone inquiries concerning this decision should be directed to Michelle R. Eason at 571-272-4231.

Michelle R. Eason
Paralegal Specialist
Office of Petitions

cc: **ASHLEY HEATHER**
158 WEST 75TH STREET
APT. A
NEW YORK, NY 10023

cc: **MR. CHARLES DARLING**
250 EAST 77TH STREET
APT. 3A
NEW YORK, NY 10075-2131

UNITED STATES PATENT AND TRADEMARK OFFICE

Commissioner for Patents
United States Patent and Trademark Office
P.O. Box 1450
Alexandria, VA 22313-1450
www.uspto.gov

GREENBERG TRAURIG (PHX)
INTELLECTUAL PROPERTY DEPARTMENT
2450 COLORADO AVENUE , SUITE 400E
SANTA MONICA, CA 90404

COPY MAILED

SEP 2 1 2009

OFFICE OF PETITIONS

In re Application of	:	
Bill **THARP**	:	
Application No. 11/585,421	:	DECISION ON PETITION
Filed: October 23, 2006	:	Under 37 CFR 1.137(b)
Attorney Docket No. **067920.1357**	:	

This is a decision on the petition under 37 CFR 1.137(b), filed July 17, 2009, to revive the above-identified application.

The petition is **GRANTED**.

The application became abandoned for failure to reply in a timely manner to the Restriction Requirement, mailed December 1, 2008, which set a shortened statutory period for reply of one (1) month or thirty (30) days (whichever is later). No extensions of time under the provisions of 37 CFR 1.136(a) were obtained. Accordingly, the application became abandoned on January 2, 2007.

The petition satisfies the requirements of 37 CFR 1.137(b) in that petitioner has supplied (1) the reply in the form of an election/amendment; (2) the petition fee of $1620; and (3) an adequate statement of unintentional delay.

Telephone inquiries concerning this decision should be directed to Monica A. Graves at (571) 272-7253.

The application is being referred to Technology Center Art Unit 2837 for consideration of the election/amendment filed July 17, 2009.

Brian W. Brown
Petitions Examiner
Office of Petitions

UNITED STATES PATENT AND TRADEMARK OFFICE

UNITED STATES DEPARTMENT OF COMMERCE
United States Patent and Trademark Office
Address: COMMISSIONER FOR PATENTS
P.O. Box 1450
Alexandria, Virginia 22313-1450
www.uspto.gov

APPLICATION NO.	FILING DATE	FIRST NAMED INVENTOR	ATTORNEY DOCKET NO.	CONFIRMATION NO.
11/585,431	10/23/2006	Lorraine C. Wang	200602062-1	7585

7590 04/21/2008
HEWLETT PACKARD COMPANY
P O BOX 272400, 3404 E. HARMONY ROAD
INTELLECTUAL PROPERTY ADMINISTRATION
FORT COLLINS, CO 80527-2400

EXAMINER
PARKER, KENNETH

ART UNIT	PAPER NUMBER
2815	

NOTIFICATION DATE	DELIVERY MODE
04/21/2008	ELECTRONIC

DECISION GRANTING PETITION UNDER 37 CFR 1.138(d)

The declaration of express abandonment is recognized

This is in response to the petition under 37 CFR 1.138(d), requesting for a refund of any previously paid search fee and excess claims fee in the above-identified application.

The petition is granted.

The express abandonment is recognized. Any previously paid search fee and excess claims fee are hereby refunded.

Telephone inquiries should be directed to the Office of Data Management at (571) 272-4200.

Naomi Sarmer

Patent Publication Branch
Office of Data Management

Adjustment date: 04/21/2008 DTERRY
04/25/2008 CNGUYEN2 00000185 082025 11585431
02 FC:1111 300.00 CR
03 FC:1201 300.00 CR

FORM PET651G (Rev. 08/07)

UNITED STATES PATENT AND TRADEMARK OFFICE

Commissioner for Patents
United States Patent and Trademark Office
P.O. Box 1450
Alexandria, VA 22313-1450
www.uspto.gov

KING & SCHICKLI, PLLC
247 NORTH BROADWAY
LEXINGTON KY 40507

MAILED

APR 0 8 2009

OFFICE OF PETITIONS

In re Application of
Constable
Application No. 11/585,438
Filed: October 24, 2006
Attorney Docket No. 1223-032

DECISION ON PETITION

This is a decision on the petition under the unintentional provisions of 37 CFR 1.137(b), filed March 12, 2009, to revive the above-identified application.

The petition is **GRANTED**.

The petition satisfies the conditions for revival pursuant to the provisions of 37 CFR 1.137(b) in that (1) the reply in the form of an amendment; (2) the petition fee; and (3) the required statement of unintentional delay have been received. Accordingly, the reply to the nonfinal rejection mailed June 27, 2008, is accepted as having been unintentionally delayed.

Telephone inquiries concerning this decision should be directed to the undersigned at (571) 272-3208.

This application is being referred to Technology Center AU 2872 for appropriate action by the Examiner in the normal course of business on the reply received March 12, 2009.

Karen Creasy

Karen Creasy
Petitions Examiner
Office of Petitions

UNITED STATES PATENT AND TRADEMARK OFFICE

Commissioner for Patents
United States Patent and Trademark Office
P.O. Box 1450
Alexandria, VA 22313-1450
www.uspto.gov

APPLICATION NUMBER	FILING/RECEIPT DATE	FIRST NAMED APPLICANT	ATTORNEY DOCKET NUMBER
11/585,462	10/24/2006	Salman Akram	2269-5095.9US (97-1102.09

TRASK BRITT, P.C./ MICRON TECHNOLOGY
P.O. BOX 2550
SALT LAKE CITY UT 84110

DATE MAILED: September 20, 2007

DECISION GRANTING PETITION UNDER 37 CFR 1.138(d)
The declaration of express abandonment is recognized

This is in response to the petition under 37 CFR 1.138(d) filed August 15, 2007, requesting for a refund of any previously paid search fee and excess claims fee in the above-identified application.

The petition is granted.

The express abandonment is recognized. Any previously paid search fee and excess claims fee are hereby refunded.

Any inquiries concerning this decision should be directed to the Pre-Grant Publication Division at (703) 605-4283.

Barbara J. Debnam
Pre-Grant Publication Division

UNITED STATES PATENT AND TRADEMARK OFFICE

UNITED STATES DEPARTMENT OF COMMERCE
United States Patent and Trademark Office
Address: COMMISSIONER FOR PATENTS
P.O. Box 1450
Alexandria, Virginia 22313-1450
www.uspto.gov

APPLICATION NO.	FILING DATE	FIRST NAMED INVENTOR	ATTORNEY DOCKET NO.	CONFIRMATION NO.
11/585,466	10/24/2006	Jung-Min Ro	1235-248	7331

7590 12/03/2008
THE FARRELL LAW FIRM, P.C.
333 EARLE OVINGTON BOULEVARD
SUITE 701
UNIONDALE, NY 11553

EXAMINER
JOHNSON, GERALD REUBEN

ART UNIT	PAPER NUMBER
4125	

MAIL DATE	DELIVERY MODE
12/03/2008	PAPER

DECISION GRANTING PETITION UNDER 37 CFR 1.138(d)

The declaration of express abandonment is recognized

This is in response to the petition under 37 CFR 1.138(d), requesting for a refund of any previously paid search fee and excess claims fee in the above-identified application.

The petition is granted.

The express abandonment is recognized. Any previously paid search fee and excess claims fee are hereby refunded.

Telephone inquiries should be directed to the Office of Data Management at (571) 272-4200.

Nioni Farmer

Patent Publication Branch
Office of Data Management

Refund Ref:
12/04/2008 NFARMER 0000165371

CHECK Refund Total: $1300.00

Adjustment date: 12/04/2008 NFARMER
10/26/2006 DEMMANU1 00000011 11585466
02 FC:1111 -500.00 OP
04 FC:1201 -200.00 OP
05 FC:1202 -600.00 OP

FORM PET651G (Rev. 08/07)

UNITED STATES PATENT AND TRADEMARK OFFICE

Commissioner for Patents
United States Patent and Trademark Office
P.O. Box 1450
Alexandria, VA 22313-1450
www.uspto.gov

ADVANCED LIQUID LOGIC, INC.
C/O WARD AND SMITH, P.A.
1001 COLLEGE COURT
P.O. BOX 867
NEW BERN, NC 28563-0867

MAILED
APR 23 2010
OFFICE OF PETITIONS

In re Application of Michael G. Pollack, et. al. Application No. 11/585,491 Filed: October 23, 2006 Attorney Docket No. 060885-00022.D002DV1	: : : : :	DECISION ON PETITION

This is a decision on the petition under 37 CFR I.182 filed January 27, 2010, to change the order of the names of the inventors.

The petition is **granted**.

The order of inventors will be changed as follows:

1. Michael G. Pollack
2. Vamsee K. Pamula
3. Richard B. Fair

A corrected Filing Receipt accompanies this decision on petition.

The Power of Attorney or Revocation of Power of Attorney with a New Power of Attorney and Change of Correspondence Address filed on January 11, 2010 has been accepted and made of record.

This application is being referred to the Office of Data Management for further processing.

Telephone inquiries regarding this decision should be directed to the undersigned at (571) 272-3226.

Andrea Smith
Petitions Examiner
Office of Petitions

ATTACHMENT: Corrected Filing Receipt

UNITED STATES PATENT AND TRADEMARK OFFICE

UNITED STATES DEPARTMENT OF COMMERCE
United States Patent and Trademark Office
Address: COMMISSIONER FOR PATENTS
P.O. Box 1450
Alexandria, Virginia 22313-1450
www.uspto.gov

APPLICATION NUMBER	FILING or 371(c) DATE	GRP ART UNIT	FIL FEE REC'D	ATTY.DOCKET.NO	TOT CLAIMS	IND CLAIMS
11/585,491	10/23/2006	1797	625	060885-00022.D002DV1	14	1

CONFIRMATION NO. 7048

CORRECTED FILING RECEIPT

67945
ADVANCED LIQUID LOGIC, INC.
C/O WARD AND SMITH, P.A.
1001 COLLEGE COURT
P.O. BOX 867
NEW BERN, NC 28563-0867

OC000000041222108

Date Mailed: 04/22/2010

Receipt is acknowledged of this non-provisional patent application. The application will be taken up for examination in due course. Applicant will be notified as to the results of the examination. Any correspondence concerning the application must include the following identification information: the U.S. APPLICATION NUMBER, FILING DATE, NAME OF APPLICANT, and TITLE OF INVENTION. Fees transmitted by check or draft are subject to collection. Please verify the accuracy of the data presented on this receipt. **If an error is noted on this Filing Receipt, please submit a written request for a Filing Receipt Correction. Please provide a copy of this Filing Receipt with the changes noted thereon. If you received a "Notice to File Missing Parts" for this application, please submit any corrections to this Filing Receipt with your reply to the Notice. When the USPTO processes the reply to the Notice, the USPTO will generate another Filing Receipt incorporating the requested corrections**

Applicant(s)

Michael G. Pollack, Durham, NC;
Vamsee K. Pamula, Durham, NC;
Richard B. Fair, Durham, NC;

Assignment For Published Patent Application

Duke University

Power of Attorney: The patent practitioners associated with Customer Number 67945

Domestic Priority data as claimed by applicant

This application is a DIV of 10/253,342 09/24/2002 PAT 7,329,545

Foreign Applications

If Required, Foreign Filing License Granted: 11/07/2006

The country code and number of your priority application, to be used for filing abroad under the Paris Convention, is **US 11/585,491**

Projected Publication Date: Not Applicable

Non-Publication Request: No

Early Publication Request: No
**** SMALL ENTITY ****

Title

METHODS FOR PERFORMING MICROFLUIDIC SAMPLING

Preliminary Class

436

PROTECTING YOUR INVENTION OUTSIDE THE UNITED STATES

Since the rights granted by a U.S. patent extend only throughout the territory of the United States and have no effect in a foreign country, an inventor who wishes patent protection in another country must apply for a patent in a specific country or in regional patent offices. Applicants may wish to consider the filing of an international application under the Patent Cooperation Treaty (PCT). An international (PCT) application generally has the same effect as a regular national patent application in each PCT-member country. The PCT process **simplifies** the filing of patent applications on the same invention in member countries, but **does not result** in a grant of "an international patent" and does not eliminate the need of applicants to file additional documents and fees in countries where patent protection is desired.

Almost every country has its own patent law, and a person desiring a patent in a particular country must make an application for patent in that country in accordance with its particular laws. Since the laws of many countries differ in various respects from the patent law of the United States, applicants are advised to seek guidance from specific foreign countries to ensure that patent rights are not lost prematurely.

Applicants also are advised that in the case of inventions made in the United States, the Director of the USPTO must issue a license before applicants can apply for a patent in a foreign country. The filing of a U.S. patent application serves as a request for a foreign filing license. The application's filing receipt contains further information and guidance as to the status of applicant's license for foreign filing.

Applicants may wish to consult the USPTO booklet, "General Information Concerning Patents" (specifically, the section entitled "Treaties and Foreign Patents") for more information on timeframes and deadlines for filing foreign patent applications. The guide is available either by contacting the USPTO Contact Center at 800-786-9199, or it can be viewed on the USPTO website at http://www.uspto.gov/web/offices/pac/doc/general/index.html.

For information on preventing theft of your intellectual property (patents, trademarks and copyrights), you may wish to consult the U.S. Government website, http://www.stopfakes.gov. Part of a Department of Commerce initiative, this website includes self-help "toolkits" giving innovators guidance on how to protect intellectual property in specific countries such as China, Korea and Mexico. For questions regarding patent enforcement issues, applicants may call the U.S. Government hotline at 1-866-999-HALT (1-866-999-4158).

LICENSE FOR FOREIGN FILING UNDER

Title 35, United States Code, Section 184

Title 37, Code of Federal Regulations, 5.11 & 5.15

GRANTED

The applicant has been granted a license under 35 U.S.C. 184, if the phrase "IF REQUIRED, FOREIGN FILING LICENSE GRANTED" followed by a date appears on this form. Such licenses are issued in all applications where the conditions for issuance of a license have been met, regardless of whether or not a license may be required as

set forth in 37 CFR 5.15. The scope and limitations of this license are set forth in 37 CFR 5.15(a) unless an earlier license has been issued under 37 CFR 5.15(b). The license is subject to revocation upon written notification. The date indicated is the effective date of the license, unless an earlier license of similar scope has been granted under 37 CFR 5.13 or 5.14.

This license is to be retained by the licensee and may be used at any time on or after the effective date thereof unless it is revoked. This license is automatically transferred to any related applications(s) filed under 37 CFR 1.53(d). This license is not retroactive.

The grant of a license does not in any way lessen the responsibility of a licensee for the security of the subject matter as imposed by any Government contract or the provisions of existing laws relating to espionage and the national security or the export of technical data. Licensees should apprise themselves of current regulations especially with respect to certain countries, of other agencies, particularly the Office of Defense Trade Controls, Department of State (with respect to Arms, Munitions and Implements of War (22 CFR 121-128)); the Bureau of Industry and Security, Department of Commerce (15 CFR parts 730-774); the Office of Foreign AssetsControl, Department of Treasury (31 CFR Parts 500+) and the Department of Energy.

NOT GRANTED

No license under 35 U.S.C. 184 has been granted at this time, if the phrase "IF REQUIRED, FOREIGN FILING LICENSE GRANTED" DOES NOT appear on this form. Applicant may still petition for a license under 37 CFR 5.12, if a license is desired before the expiration of 6 months from the filing date of the application. If 6 months has lapsed from the filing date of this application and the licensee has not received any indication of a secrecy order under 35 U.S.C. 181, the licensee may foreign file the application pursuant to 37 CFR 5.15(b).

UNITED STATES PATENT AND TRADEMARK OFFICE

UNITED STATES DEPARTMENT OF COMMERCE
United States Patent and Trademark Office
Address: COMMISSIONER FOR PATENTS
P.O. Box 1450
Alexandria, Virginia 22313-1450
www.uspto.gov

APPLICATION NUMBER	FILING OR 371(C) DATE	FIRST NAMED APPLICANT	ATTY. DOCKET NO./TITLE
11/585,491	10/23/2006	Vamsee K. Pamula	060885-00022.D002DV1

CONFIRMATION NO. 7048

POA ACCEPTANCE LETTER

67945
ADVANCED LIQUID LOGIC, INC.
C/O WARD AND SMITH, P.A.
1001 COLLEGE COURT
P.O. BOX 867
NEW BERN, NC 28563-0867

OC000000041221970

Date Mailed: 04/22/2010

NOTICE OF ACCEPTANCE OF POWER OF ATTORNEY

This is in response to the Power of Attorney filed 01/11/2010.

The Power of Attorney in this application is accepted. Correspondence in this application will be mailed to the above address as provided by 37 CFR 1.33.

/amsmith/

Office of Data Management, Application Assistance Unit (571) 272-4000, or (571) 272-4200, or 1-888-786-0101

UNITED STATES PATENT AND TRADEMARK OFFICE

Commissioner for Patents
United States Patent and Trademark Office
P.O. Box 1450
Alexandria, VA 22313-1450
www.uspto.gov

MILLEN, WHITE, ZELANO AND BRANIGAN, P.C.
C/O BERLEX BIOSCIENCES
2200 CLARENDON BOUEVARD
SUITE 1400
ARLINGTON VA 22201

COPY MAILED

DEC 17 2009

OFFICE OF PETITIONS

In re Application of	:	
Bauman et al.	:	
Application No. 11/585,501	:	ON PETITION
Filed: October 23, 2006	:	
Attorney Docket No. 52225AUSC2	:	

This is a decision on the petition under 37 C.F.R. § 1.137(b), filed October 23, 2009, to revive the above-identified application.

The petition is **GRANTED**.

The petition satisfies the requirements of 37 CFR 1.137(b) in that petitioner has supplied (1) the reply in the form of an Reply to the Office action, (2) the petition fee, and (3) a proper statement of unintentional delay.

Telephone inquiries concerning this decision should be directed to the undersigned at (571) 272-3206.

This matter is being referred to Technology Center AU 1621 for further examination on the merits.

Liana Walsh
Petitions Examiner
Office of Petitions

UNITED STATES PATENT AND TRADEMARK OFFICE

UNITED STATES DEPARTMENT OF COMMERCE
United States Patent and Trademark Office
Address: COMMISSIONER FOR PATENTS
P.O. Box 1450
Alexandria, Virginia 22313-1450
www.uspto.gov

FITCH EVEN TABIN & FLANNERY
120 SOUTH LASALLE STREET
SUITE 1600
CHICAGO, IL 60603-3406

Mail Date: 04/21/2010

Applicant	: Teruhiko Hiruta	: DECISION ON REQUEST FOR
Patent Number	: 7607728	: RECALCULATION of PATENT
Issue Date	: 10/27/2009	: TERM ADJUSTMENT IN VIEW
Appliction No	: 11/585,502	: OF WYETH AND NOTICE OF INTENT TO
Filed	: 10/24/2006	: ISSUE CERTIFICATE OF CORRECTION
		:

The Request for Recalculation is **GRANTED** to the extent indicated.

The patent term adjustment has been determined to be **0** days. The USPTO will *sua sponte* issue a certificate of correction reflecting the amount of PTA days determined by the recalculation.

Prior to the issuance of the certificate of correction, the USPTO will afford patentee an opportunity to be heard and request reconsideration. Accordingly, patentee has **one month or thirty (30) days**, whichever is longer, to file a request for reconsideration of this patent term adjustment calculation. See 35 U.S.C. 154(b)(3)(B)(ii) and 37 CFR 1.322(a)(4). No extensions of time will be granted under 37 CFR 1.136.

Patentee should use document code PET.OP if electronically filing a request for reconsideration of this patent term adjustment calculation. The patentee must also include the information required by 37 CFR 1.705(b)(2) and the fee required by 37 CFR 1.18(e). If patentee does not file a timely request for reconsideration of this patent term adjustment calculation including the information required by 37 CFR 1.705(b)(2) and the fee required by 37 CFR 1.18(e), the USPTO will issue a certificate of correction reflecting the PTA determination noted above.

Patentee should be aware that in order to preserve the right to review in the United States District Court for the District of Columbia of the USPTO patent term adjustment determination, patentee must ensure that he or she also take the steps required under 35 U.S.C. 154(b)(4)(A) in a timely manner. Nothing in the request for recalculation should be construed as providing an alternative time frame for commencing a civil action under 35 U.S.C. 154(b)(4)(A).

Any questions concerning this decision should be directed to the Office of Patent Legal Administration at 571-272-7702.

UNITED STATES PATENT AND TRADEMARK OFFICE

UNITED STATES DEPARTMENT OF COMMERCE
United States Patent and Trademark Office
Address: COMMISSIONER FOR PATENTS
P.O. Box 1450
Alexandria, Virginia 22313-1450
www.uspto.gov

MYERS BIGEL SIBLEY & SAJOVEC
PO BOX 37428
RALEIGH, NC 27627

Mail Date: 04/21/2010

Applicant	: Norbert Hiller	: DECISION ON REQUEST FOR
Patent Number	: 7638013	: RECALCULATION of PATENT
Issue Date	: 12/29/2009	: TERM ADJUSTMENT IN VIEW
Appliction No	: 11/585,515	: OF WYETH AND NOTICE OF INTENT TO
Filed	: 10/24/2006	: ISSUE CERTIFICATE OF CORRECTION
		:

The Request for Recalculation is **GRANTED** to the extent indicated.

The patent term adjustment has been determined to be **517** days. The USPTO will *sua sponte* issue a certificate of correction reflecting the amount of PTA days determined by the recalculation.

Prior to the issuance of the certificate of correction, the USPTO will afford patentee an opportunity to be heard and request reconsideration. Accordingly, patentee has **one month or thirty (30) days**, whichever is longer, to file a request for reconsideration of this patent term adjustment calculation. See 35 U.S.C. 154(b)(3)(B)(ii) and 37 CFR 1.322(a)(4). No extensions of time will be granted under 37 CFR 1.136.

Patentee should use document code PET.OP if electronically filing a request for reconsideration of this patent term adjustment calculation. The patentee must also include the information required by 37 CFR 1.705(b)(2) and the fee required by 37 CFR 1.18(e). If patentee does not file a timely request for reconsideration of this patent term adjustment calculation including the information required by 37 CFR 1.705(b)(2) and the fee required by 37 CFR 1.18(e), the USPTO will issue a certificate of correction reflecting the PTA determination noted above.

Patentee should be aware that in order to preserve the right to review in the United States District Court for the District of Columbia of the USPTO patent term adjustment determination, patentee must ensure that he or she also take the steps required under 35 U.S.C. 154(b)(4)(A) in a timely manner. Nothing in the request for recalculation should be construed as providing an alternative time frame for commencing a civil action under 35 U.S.C. 154(b)(4)(A).

Any questions concerning this decision should be directed to the Office of Patent Legal Administration at 571-272-7702.

UNITED STATES PATENT AND TRADEMARK OFFICE

Commissioner for Patents
United States Patent and Trademark Office
P.O. Box 1450
Alexandria, VA 22313-1450
www.uspto.gov

MAILED
FROM DIRECTOR'S OFFICE

DEC 21 2006

TECHNOLOGY CENTER 3600

FERNANDEZ & ASSOCIATES LLP
1047 EL CAMINO REAL
SUITE 201
MENLO PARK, CA 94025

In re application of	:	**DECISION ON PETITION**
Dennis s. Fernandez	:	**TO MAKE SPECIAL FOR**
Application No. 11/585,520	:	**NEW APPLICATION**
Filed: October 23, 2006	:	**UNDER 37 CFR 1.102**
For: TELEMATIC METHOD AND APPARATUS	:	
WITH INTEGRATED POWER SOURCE	:	

This is a decision on the petition filed on October 23, 2006 to make the above-identified application special for accelerated examination procedure under 37 C.F.R. § 1.102(d).

The petition to make the application special is **DENIED**.

REGULATION AND PRACTICE

To be eligible for accelerated examination under 37 C.F.R. § 1.102(d) and pursuant to the "Change to Practice for Petitions in Patent Applications to Make Special and for Accelerated Examination" published in the Federal Register on June 26, 2006 (71 Fed. Reg. 36323), the following conditions must be satisfied:

1. The application must be a non-reissue utility or design application filed under 37 CFR 1.111(a);
2. The application, the petition and the required fees must be filed electronically using the USPTO's electronic filing system (EFS), or EFS-web; if not filed electronically, a statement asserting that EFS and EFS-web were not available during the normal business hours;
3. The application, at the time of filing, must be complete under 37 CFR 1.51 and in condition for examination;
4. The application must contain three or fewer independent claims and twenty or fewer total claims and the claims must be directed to a single invention.

The petition to make special under accelerated examination under 37 C.F.R. § 1.102(d) is not acceptable because it appears that the petition was filed under the guidelines for making an application special that were in effect prior to August 25, 2006. As of August 25, 2006 the new guidelines replaced the old guidelines. Since applicant's petition was received on October 23, 2006 the petition must be considered under the new guidelines and thus is properly **DENIED**.

For the above-stated reasons, the petition is denied. The application will therefore be taken up by the examiner for action in its regular turn.

Any inquiry regarding this decision should be directed to Kenneth J. Dorner, Quality Assurance Specialist, at (571) 272-6587.

Kenneth J. Dorner
Quality Assurance Specialist
Technology Center 3600

KJD/dew: 12/11/06

UNITED STATES PATENT AND TRADEMARK OFFICE

UNITED STATES DEPARTMENT OF COMMERCE
United States Patent and Trademark Office
Address: COMMISSIONER FOR PATENTS
P.O. Box 1450
Alexandria, Virginia 22313-1450
www.uspto.gov

SEAGATE TECHNOLOGY LLC
INTELLECTUAL PROPERTY DEPT./ MAIL STOP NRW-097
7801 COMPUTER AVENUE SOUTH
BLOOMINGTON, MN 55435

Mail Date: 04/21/2010

Applicant	: Wayne A. Bonin	: DECISION ON REQUEST FOR
Patent Number	: 7609488	: RECALCULATION of PATENT
Issue Date	: 10/27/2009	: TERM ADJUSTMENT IN VIEW
Appliction No	: 11/585,584	: OF WYETH AND NOTICE OF INTENT TO
Filed	: 10/24/2006	: ISSUE CERTIFICATE OF CORRECTION
		:

The Request for Recalculation is **GRANTED** to the extent indicated.

The patent term adjustment has been determined to be **375** days. The USPTO will *sua sponte* issue a certificate of correction reflecting the amount of PTA days determined by the recalculation.

Prior to the issuance of the certificate of correction, the USPTO will afford patentee an opportunity to be heard and request reconsideration. Accordingly, patentee has **one month or thirty (30) days**, whichever is longer, to file a request for reconsideration of this patent term adjustment calculation. See 35 U.S.C. 154(b)(3)(B)(ii) and 37 CFR 1.322(a)(4). No extensions of time will be granted under 37 CFR 1.136.

Patentee should use document code PET.OP if electronically filing a request for reconsideration of this patent term adjustment calculation. The patentee must also include the information required by 37 CFR 1.705(b)(2) and the fee required by 37 CFR 1.18(e). If patentee does not file a timely request for reconsideration of this patent term adjustment calculation including the information required by 37 CFR 1.705(b)(2) and the fee required by 37 CFR 1.18(e), the USPTO will issue a certificate of correction reflecting the PTA determination noted above.

Patentee should be aware that in order to preserve the right to review in the United States District Court for the District of Columbia of the USPTO patent term adjustment determination, patentee must ensure that he or she also take the steps required under 35 U.S.C. 154(b)(4)(A) in a timely manner. Nothing in the request for recalculation should be construed as providing an alternative time frame for commencing a civil action under 35 U.S.C. 154(b)(4)(A).

Any questions concerning this decision should be directed to the Office of Patent Legal Administration at 571-272-7702.

UNITED STATES PATENT AND TRADEMARK OFFICE

Commissioner for Patents
United States Patent and Trademark Office
P.O. Box 1450
Alexandria, VA 22313-1450
www.uspto.gov

CHOATE, HALL & STEWART LLP
TWO INTERNATIONAL PLACE
BOSTON, MA 02110

COPY MAILED
MAR 09 2010

In re Application of	:	
Drapeau et al.	:	DECISION ON PETITION
Application No. 11/585,607	:	TO WITHDRAW
Filed: October 24, 2006	:	FROM RECORD
Attorney Docket No. AM102085	:	

This is a decision on the Request to Withdraw as attorney or agent of record under 37 C.F.R. § 1.36(b) filed January 4, 2010, which is being treated as a request to withdraw from employment in a proceeding before the Office under 37 C.F.R. § 10.40.

The request is **DISMISSED**.

A review of the file record indicates that Choate, Hall & Stewart LLP does not have power of attorney in this patent application. Accordingly, the request to withdraw under 37 C.F.R. § 1.36(b) is not applicable.

Telephone inquires concerning this decision should be directed to the undersigned at 571-272-7751.

Joan Olszewski
Petitions Examiner
Office of Petitions

UNITED STATES PATENT AND TRADEMARK OFFICE

UNITED STATES DEPARTMENT OF COMMERCE
United States Patent and Trademark Office
Address: COMMISSIONER FOR PATENTS
P.O. Box 1450
Alexandria, Virginia 22313-1450
www.uspto.gov

MILLS & ONELLO LLP
ELEVEN BEACON STREET
SUITE 605
BOSTON, MA 02108

Mail Date: 04/21/2010

Applicant	: Young-Uk Chang	: DECISION ON REQUEST FOR
Patent Number	: 7612578	: RECALCULATION of PATENT
Issue Date	: 11/03/2009	: TERM ADJUSTMENT IN VIEW
Appliction No	: 11/585,615	: OF WYETH AND NOTICE OF INTENT TO
Filed	: 10/24/2006	: ISSUE CERTIFICATE OF CORRECTION
		:

The Request for Recalculation is **GRANTED** to the extent indicated.

The patent term adjustment has been determined to be **5** days. The USPTO will *sua sponte* issue a certificate of correction reflecting the amount of PTA days determined by the recalculation.

Prior to the issuance of the certificate of correction, the USPTO will afford patentee an opportunity to be heard and request reconsideration. Accordingly, patentee has **one month or thirty (30) days**, whichever is longer, to file a request for reconsideration of this patent term adjustment calculation. See 35 U.S.C. 154(b)(3)(B)(ii) and 37 CFR 1.322(a)(4). No extensions of time will be granted under 37 CFR 1.136.

Patentee should use document code PET.OP if electronically filing a request for reconsideration of this patent term adjustment calculation. The patentee must also include the information required by 37 CFR 1.705(b)(2) and the fee required by 37 CFR 1.18(e). If patentee does not file a timely request for reconsideration of this patent term adjustment calculation including the information required by 37 CFR 1.705(b)(2) and the fee required by 37 CFR 1.18(e), the USPTO will issue a certificate of correction reflecting the PTA determination noted above.

Patentee should be aware that in order to preserve the right to review in the United States District Court for the District of Columbia of the USPTO patent term adjustment determination, patentee must ensure that he or she also take the steps required under 35 U.S.C. 154(b)(4)(A) in a timely manner. Nothing in the request for recalculation should be construed as providing an alternative time frame for commencing a civil action under 35 U.S.C. 154(b)(4)(A).

Any questions concerning this decision should be directed to the Office of Patent Legal Administration at 571-272-7702.

UNITED STATES PATENT AND TRADEMARK OFFICE

Commissioner for Patents
United States Patent and Trademark Office
P.O. Box 1450
Alexandria, VA 22313-1450
www.uspto.gov

WARF/BHGL
P.O. BOX 10395
CHICAGO, IL 60610

COPY MAILED

DEC 0 2 2009

OFFICE OF PETITIONS

In re Application of	:	
John M. Denu, et al.	:	
Application No. 11/585,625	:	DECISION ON PETITION
Filed: October 24, 2006	:	TO WITHDRAW
Attorney Docket No. 12854-34 (Po6108US)	:	FROM RECORD
	:	

This is a decision on the Request to Withdraw as attorney or agent of record under 37 C.F.R. § 1.36(b), filed August 26, 2009 and resubmitted October 5, 2009.

The request is **DISMISSED** as moot.

A review of the file record indicates that the power of attorney to WARF/BHGL has been revoked by the assignee of the patent application on September 30, 2009. Accordingly, the request to withdraw under 37 C.F.R. § 1.36(b) is moot.

All future communications from the Office will continue to be directed to the below-listed address until otherwise notified by applicant.

Telephone inquires concerning this decision should be directed to undersigned at 571-272-1642. All other inquiries concerning the examination or status of this application should be directed to the Technology Center.

/AMW/
April M. Wise
Petitions Examiner
Office of Petitions

cc: MICHAEL, BEST & FRIEDRICH. LLP
ONE SOUTH PINCKNEY STREET
SUITE 700
MADISON, WI 53703-4257

UNITED STATES PATENT AND TRADEMARK OFFICE

Commissioner for Patents
United States Patent and Trademark Office
P.O. Box 1450
Alexandria, VA 22313-1450
www.uspto.gov

TIMOTHY S. STEVENS
5108 FOXPOINT CIRCLE
MIDLAND, MI 48642

COPY MAILED

NOV 17 2006

OFFICE OF PETITIONS

In re Application of	:	
Earl T. Kiser	:	
Application No. 11/585,640	:	DECISION ON PETITION
Filed: October 24, 2006	:	TO MAKE SPECIAL UNDER
Attorney Docket No. TSS2005D1	:	37 CFR 1.102(c)(1)
	:	

This is a decision on the petition under 37 CFR 1.102(c)(1), filed October 24, 2006, to make the above-identified application special based on applicant's age as set forth in M.P.E.P. § 708.02, Section IV.

The petition is **GRANTED**.

A grantable petition to make an application special under 37 CFR 1.102(c)(1) and MPEP § 708.02, Section IV: Applicant's Age, must be accompanied by evidence showing that at least one of the applicants is 65 years of age, or more, such as a birth certificate or a statement by applicant. No fee is required.

The instant petition includes declaration statement signed by the applicant. Accordingly, the above-identified application has been accorded "special" status.

Telephone inquiries concerning this decision should be directed to the undersigned at 571-272-1642.

All other inquiries concerning either the examination or status of the application should be directed to the Technology Center.

The application is being forwarded to the Technology Center Art Unit 3754 for action on the merits commensurate with this decision.

April M. Wise
Petitions Examiner
Office of Petitions

UNITED STATES PATENT AND TRADEMARK OFFICE

UNITED STATES DEPARTMENT OF COMMERCE
United States Patent and Trademark Office
Address: COMMISSIONER FOR PATENTS
P.O. Box 1450
Alexandria, Virginia 22313-1450
www.uspto.gov

FISH & RICHARDSON P.C.
P.O. Box 1022
MINNEAPOLIS, MN 55440-1022

Mail Date: 04/20/2010

Applicant	: Christopher Brichford	: DECISION ON REQUEST FOR
Patent Number	: 7614003	: RECALCULATION of PATENT
Issue Date	: 11/03/2009	: TERM ADJUSTMENT IN VIEW
Appliction No	: 11/585,661	: OF WYETH AND NOTICE OF INTENT TO
Filed	: 10/23/2006	: ISSUE CERTIFICATE OF CORRECTION
		:

The Request for Recalculation is **GRANTED** to the extent indicated.

The patent term adjustment has been determined to be **194** days. The USPTO will *sua sponte* issue a certificate of correction reflecting the amount of PTA days determined by the recalculation.

Prior to the issuance of the certificate of correction, the USPTO will afford patentee an opportunity to be heard and request reconsideration. Accordingly, patentee has **one month or thirty (30) days**, whichever is longer, to file a request for reconsideration of this patent term adjustment calculation. See 35 U.S.C. 154(b)(3)(B)(ii) and 37 CFR 1.322(a)(4). No extensions of time will be granted under 37 CFR 1.136.

Patentee should use document code PET.OP if electronically filing a request for reconsideration of this patent term adjustment calculation. The patentee must also include the information required by 37 CFR 1.705(b)(2) and the fee required by 37 CFR 1.18(e). If patentee does not file a timely request for reconsideration of this patent term adjustment calculation including the information required by 37 CFR 1.705(b)(2) and the fee required by 37 CFR 1.18(e), the USPTO will issue a certificate of correction reflecting the PTA determination noted above.

Patentee should be aware that in order to preserve the right to review in the United States District Court for the District of Columbia of the USPTO patent term adjustment determination, patentee must ensure that he or she also take the steps required under 35 U.S.C. 154(b)(4)(A) in a timely manner. Nothing in the request for recalculation should be construed as providing an alternative time frame for commencing a civil action under 35 U.S.C. 154(b)(4)(A).

Any questions concerning this decision should be directed to the Office of Patent Legal Administration at 571-272-7702.

UNITED STATES PATENT AND TRADEMARK OFFICE

UNITED STATES DEPARTMENT OF COMMERCE
United States Patent and Trademark Office
Address: COMMISSIONER FOR PATENTS
P.O. Box 1450
Alexandria, Virginia 22313-1450
www.uspto.gov

WESTMAN CHAMPLIN & KELLY, P.A.
SUITE 1400
900 SECOND AVENUE SOUTH
MINNEAPOLIS, MN 55402

Mail Date: 04/21/2010

Applicant	: Kevin I. Bertness	: DECISION ON REQUEST FOR
Patent Number	: 7642787	: RECALCULATION of PATENT
Issue Date	: 01/05/2010	: TERM ADJUSTMENT IN VIEW
Appliction No	: 11/585,675	: OF WYETH AND NOTICE OF INTENT TO
Filed	: 10/24/2006	: ISSUE CERTIFICATE OF CORRECTION
		:

The Request for Recalculation is **GRANTED** to the extent indicated.

The patent term adjustment has been determined to be **422** days. The USPTO will *sua sponte* issue a certificate of correction reflecting the amount of PTA days determined by the recalculation.

Prior to the issuance of the certificate of correction, the USPTO will afford patentee an opportunity to be heard and request reconsideration. Accordingly, patentee has **one month or thirty (30) days**, whichever is longer, to file a request for reconsideration of this patent term adjustment calculation. See 35 U.S.C. 154(b)(3)(B)(ii) and 37 CFR 1.322(a)(4). No extensions of time will be granted under 37 CFR 1.136.

Patentee should use document code PET.OP if electronically filing a request for reconsideration of this patent term adjustment calculation. The patentee must also include the information required by 37 CFR 1.705(b)(2) and the fee required by 37 CFR 1.18(e). If patentee does not file a timely request for reconsideration of this patent term adjustment calculation including the information required by 37 CFR 1.705(b)(2) and the fee required by 37 CFR 1.18(e), the USPTO will issue a certificate of correction reflecting the PTA determination noted above.

Patentee should be aware that in order to preserve the right to review in the United States District Court for the District of Columbia of the USPTO patent term adjustment determination, patentee must ensure that he or she also take the steps required under 35 U.S.C. 154(b)(4)(A) in a timely manner. Nothing in the request for recalculation should be construed as providing an alternative time frame for commencing a civil action under 35 U.S.C. 154(b)(4)(A).

Any questions concerning this decision should be directed to the Office of Patent Legal Administration at 571-272-7702.

UNITED STATES PATENT AND TRADEMARK OFFICE

UNITED STATES DEPARTMENT OF COMMERCE
United States Patent and Trademark Office
Address: COMMISSIONER FOR PATENTS
P.O. Box 1450
Alexandria, Virginia 22313-1450
www.uspto.gov

KNOBBE MARTENS OLSON & BEAR LLP
2040 MAIN STREET
FOURTEENTH FLOOR
IRVINE, CA 92614

Mail Date: 05/25/2010

Applicant	: Donald C. Miller	: DECISION ON REQUEST FOR
Patent Number	: 7632203	: RECALCULATION of PATENT
Issue Date	: 12/15/2009	: TERM ADJUSTMENT IN VIEW
Application No	: 11/585,677	: OF WYETH AND NOTICE OF INTENT TO
Filed	: 10/24/2006	: ISSUE CERTIFICATE OF CORRECTION
		:

The Request for Recalculation is **GRANTED** to the extent indicated.

The patent term adjustment has been determined to be **438** days. The USPTO will *sua sponte* issue a certificate of correction reflecting the amount of PTA days determined by the recalculation.

Prior to the issuance of the certificate of correction, the USPTO will afford patentee an opportunity to be heard and request reconsideration. Accordingly, patentee has **one month or thirty (30) days**, whichever is longer, to file a request for reconsideration of this patent term adjustment calculation. See 35 U.S.C. 154(b)(3)(B)(ii) and 37 CFR 1.322(a)(4). No extensions of time will be granted under 37 CFR 1.136.

Patentee should use document code PET.OP if electronically filing a request for reconsideration of this patent term adjustment calculation. The patentee must also include the information required by 37 CFR 1.705(b)(2) and the fee required by 37 CFR 1.18(e). If patentee does not file a timely request for reconsideration of this patent term adjustment calculation including the information required by 37 CFR 1.705(b)(2) and the fee required by 37 CFR 1.18(e), the USPTO will issue a certificate of correction reflecting the PTA determination noted above.

Patentee should be aware that in order to preserve the right to review in the United States District Court for the District of Columbia of the USPTO patent term adjustment determination, patentee must ensure that he or she also take the steps required under 35 U.S.C. 154(b)(4)(A) in a timely manner. Nothing in the request for recalculation should be construed as providing an alternative time frame for commencing a civil action under 35 U.S.C. 154(b)(4)(A).

Any questions concerning this decision should be directed to the Office of Patent Legal Administration at 571-272-7702.

UNITED STATES PATENT AND TRADEMARK OFFICE

COMMISSIONER FOR PATENTS
UNITED STATES PATENT AND TRADEMARK OFFICE
P.O. BOX 1450
ALEXANDRIA, VA 22313-1450
www.uspto.gov

ROHM AND HAAS COMPANY
PATENT DEPARTMENT
100 INDEPENDENCE MALL WEST
PHILADELPHIA PA 19106-2399

COPY MAILED

APR 16 2008

OFFICE OF PETITIONS

In re Application of	:	
Kurt John Waatti	:	
Application No.: 11/585,700	:	ON PETITION
Filed: October 24, 2006	:	
Attorney Docket No.: A01856	:	

This is a decision on the petition, filed April 14, 2008, under 37 CFR 1.313(c)(2) to withdraw the above-identified application from issue after payment of the issue fee.

The petition is **GRANTED**.

The above-identified application is withdrawn from issue for consideration of a submission under 37 CFR 1.114 (request for continued examination). See 37 CFR 1.313(c)(2).

Petitioner is advised that the issue fee paid on April 2, 2008, cannot be refunded. If, however, this application is again allowed, petitioner may request that it be applied towards the issue fee required by the new Notice of Allowance.[1]

Telephone inquiries relating to this decision should be directed to the undersigned at (571) 272-3204.

The application is being referred to Technology Center AU 1797 for further processing of the request for continued examination under 37 CFR 1.114 and for consideration of the concurrently filed Information Disclosure Statement (IDS).

Sherry D. Brinkley
Petitions Examiner
Office of Petitions

[1] *The request to apply the issue fee to the new Notice may be satisfied by completing and returning the new Part B – Fee(s) Transmittal Form (along with any balance due at the time of submission). Petitioner is advised that the Issue Fee Transmittal Form must be completed and timely submitted to avoid abandonment of the application.*

UNITED STATES PATENT AND TRADEMARK OFFICE

UNITED STATES DEPARTMENT OF COMMERCE
United States Patent and Trademark Office
Address: COMMISSIONER FOR PATENTS
P.O. Box 1450
Alexandria, Virginia 22313-1450
www.uspto.gov

NIXON PEABODY, LLP
300 S. Riverside Plaza, 16th Floor
CHICAGO, IL 60606-6613

Mail Date: 04/21/2010

Applicant	: Theodore M. Powell	: DECISION ON REQUEST FOR
Patent Number	: 7661956	: RECALCULATION of PATENT
Issue Date	: 02/16/2010	: TERM ADJUSTMENT IN VIEW
Appliction No	: 11/585,705	: OF WYETH AND NOTICE OF INTENT TO
Filed	: 10/24/2006	: ISSUE CERTIFICATE OF CORRECTION
		:

The Request for Recalculation is **GRANTED** to the extent indicated.

The patent term adjustment has been determined to be **630** days. The USPTO will *sua sponte* issue a certificate of correction reflecting the amount of PTA days determined by the recalculation.

Prior to the issuance of the certificate of correction, the USPTO will afford patentee an opportunity to be heard and request reconsideration. Accordingly, patentee has **one month or thirty (30) days**, whichever is longer, to file a request for reconsideration of this patent term adjustment calculation. See 35 U.S.C. 154(b)(3)(B)(ii) and 37 CFR 1.322(a)(4). No extensions of time will be granted under 37 CFR 1.136.

Patentee should use document code PET.OP if electronically filing a request for reconsideration of this patent term adjustment calculation. The patentee must also include the information required by 37 CFR 1.705(b)(2) and the fee required by 37 CFR 1.18(e). If patentee does not file a timely request for reconsideration of this patent term adjustment calculation including the information required by 37 CFR 1.705(b)(2) and the fee required by 37 CFR 1.18(e), the USPTO will issue a certificate of correction reflecting the PTA determination noted above.

Patentee should be aware that in order to preserve the right to review in the United States District Court for the District of Columbia of the USPTO patent term adjustment determination, patentee must ensure that he or she also take the steps required under 35 U.S.C. 154(b)(4)(A) in a timely manner. Nothing in the request for recalculation should be construed as providing an alternative time frame for commencing a civil action under 35 U.S.C. 154(b)(4)(A).

Any questions concerning this decision should be directed to the Office of Patent Legal Administration at 571-272-7702.

UNITED STATES PATENT AND TRADEMARK OFFICE

Commissioner for Patents
United States Patent and Trademark Office
P.O. Box 1450
Alexandria, VA 22313-1450
www.uspto.gov

COPY MAILED

SEP 19 2007

OFFICE OF PETITIONS

KENNETH W. ILES
LAW OFFICES OF KENNETH W. ILES
9903 WEST 129TH STREET
OVERLAND PARK KS 66213-3222

In re Application of	:	
HURLEY, Edward P. et al.	:	
Application No. 11/585,707	:	DECISION ON PETITION
Filed: October 24, 2006	:	TO WITHDRAW
Attorney Docket No.	:	FROM RECORD
	:	

This is a decision on the Request to Withdraw as attorney or agent of record under 37 C.F.R. § 1.36(b), filed August 13, 2007.

The request is **APPROVED**.

A grantable request to withdraw as attorney/agent of record must be signed by every attorney/agent seeking to withdraw or contain a clear indication that one attorney is signing on behalf of another/others. A request to withdraw will not be approved unless at least 30 (thirty) days would remain between the date of approval and the later of the expiration date of a time to file a response or the expiration date of the maximum time period which can be extended under 37 C.F.R. § 1.136(a).

The request was signed by Kenneth Iles. Applicant is reminded that there is no attorney of record at this time. All future correspondence will be directed to the first named inventor Edward Hurley at the address indicated below.

Telephone inquiries concerning this decision should be directed to Tredelle Jackson at 571-272-2783.

Monica A. Graves
Petitions Examiner
Office of Petitions

cc: **EDWARD P. HURLEY**
SECRETARY AND TREASURER
HEOW, INC.
1214 WESTERN PINE CIRCLE
SARASOTA, FL 34240

UNITED STATES PATENT AND TRADEMARK OFFICE

UNITED STATES DEPARTMENT OF COMMERCE
United States Patent and Trademark Office
Address: COMMISSIONER FOR PATENTS
P.O. Box 1450
Alexandria, Virginia 22313-1450
www.uspto.gov

BARRY W. CHAPIN, ESQ.
CHAPIN INTELLECTUAL PROPERTY LAW, LLC
WESTBOROUGH OFFICE PARK
1700 WEST PARK DRIVE, SUITE 280
WESTBOROUGH, MA 01581

Mail Date: 04/20/2010

Applicant	: Juan-Carlos Colosso	: DECISION ON REQUEST FOR
Patent Number	: 7603318	: RECALCULATION of PATENT
Issue Date	: 10/13/2009	: TERM ADJUSTMENT IN VIEW
Appliction No	: 11/585,734	: OF WYETH AND NOTICE OF INTENT TO
Filed	: 10/24/2006	: ISSUE CERTIFICATE OF CORRECTION
		:

The Request for Recalculation is **GRANTED** to the extent indicated.

The patent term adjustment has been determined to be **239** days. The USPTO will *sua sponte* issue a certificate of correction reflecting the amount of PTA days determined by the recalculation.

Prior to the issuance of the certificate of correction, the USPTO will afford patentee an opportunity to be heard and request reconsideration. Accordingly, patentee has **one month or thirty (30) days**, whichever is longer, to file a request for reconsideration of this patent term adjustment calculation. See 35 U.S.C. 154(b)(3)(B)(ii) and 37 CFR 1.322(a)(4). No extensions of time will be granted under 37 CFR 1.136.

Patentee should use document code PET.OP if electronically filing a request for reconsideration of this patent term adjustment calculation. The patentee must also include the information required by 37 CFR 1.705(b)(2) and the fee required by 37 CFR 1.18(e). If patentee does not file a timely request for reconsideration of this patent term adjustment calculation including the information required by 37 CFR 1.705(b)(2) and the fee required by 37 CFR 1.18(e), the USPTO will issue a certificate of correction reflecting the PTA determination noted above.

Patentee should be aware that in order to preserve the right to review in the United States District Court for the District of Columbia of the USPTO patent term adjustment determination, patentee must ensure that he or she also take the steps required under 35 U.S.C. 154(b)(4)(A) in a timely manner. Nothing in the request for recalculation should be construed as providing an alternative time frame for commencing a civil action under 35 U.S.C. 154(b)(4)(A).

Any questions concerning this decision should be directed to the Office of Patent Legal Administration at 571-272-7702.

UNITED STATES PATENT AND TRADEMARK OFFICE

Commissioner for Patents
United States Patent and Trademark Office
P.O. Box 1450
Alexandria, VA 22313-1450
www.uspto.gov

JJGJR.: 12-07

Paper No: __

COPY MAILED

JAN 04 2008

OFFICE OF PETITIONS

TOWNSEND AND TOWNSEND AND CREW, LLP
TWO EMBARCADERO CENTER
EIGHTH FLOOR
SAN FRANCISCO CA 94111-3834

In re Application of		
Ito, et al.	:	
Application No. 11/585,747	:	DECISION ON PETITION
Filed: 23 October, 2006	:	
Attorney Docket No. 26869T-001910US	:	

This is a decision on the petition filed on 4 December, 2006, and considered under 37 C.F.R. §1.53.

The Office regrets the delay in addressing the matter—the petition was presented to the attorneys in the Office of Petitions only at this writing.

For the reasons set forth below, the petition under 37 C.F.R. §1.53 is **DISMISSED**.

BACKGROUND

The instant application was deposited on 23 October, 2006

On 9 November, 2006, the Office of Initial Patent Examination (OIPE) mailed a Notice of Omitted Items (to wit: "pages 45, 46 of the specification (description and claims)," and thus, the application had been accorded a filing date without those pages.

OIPE indicated that Petitioner might:

- contend via petition that pages 45, 46 of the specification (description and claims) had been submitted on deposit and so evidence that condition with the proper supporting documentation (i.e., a date stamped receipt card (see: MPEP §503)) along with a copy of the specification; or

- submit pages 45, 46 of the specification (description and claims), and accept the date of submission as the filing date; or

- accept the application as deposited.

OIPE set a two- (2-) month period for reply.

On 4 December, 2006, Petitioner submitted the instant petition, including therewith, *inter alia*, what is averred to be a true copy of pages 45, 46 of the specification (description and claims), along with a copy of Petitioner's date-stamped receipt card.

ANALYSIS

A search of the official file reveals that:

- on 23 October, 2006, Petitioner deposited the instant application;

- the Office record reflects that pages 45, 46 of the specification (description and claims) were missing upon deposit—and the pages that are present include (with an unnumbered page(numbered description pages 1 – 44 and 47, claims pages 48 - .

- the date-stamped ("102306") receipt card evidences—in pertinent part–the following:

* * *

* Patent specification (53 pages) (Emphasis supplied)

* * *

Petitioner's receipt card itemized the contents of the application only in generalities—i.e., as to the number of pages in the specification, however, the specification submitted purports to contain an unnumbered title page and 53 numbered pages of description, claims and abstract. The Office acknowledges receiving 46 pages of specification, 5 pages of claims and 1 page of abstract—for a total of 52 pages—however the pages received are the title page and pages 1 – 44 and page 47.

Because Petitioner was not more specific (e.g., title (unnumbered) and specification pages 1 – 47) it is impossible to know which page/pages is/are missing.

As of this writing, it is not possible to accord pages 45 and 46 a filing date of 23 October, 2006.

Moreover, as of this writing the Notice mailed on 9 November, 2006, is not deemed to have been sent in error and, therefore,, is not now disturbed.

CONCLUSION

The petition is **dismissed**.

This application is released to OIPE for further processing with no change to the filing dated.

While telephone inquiries regarding this decision may be directed to the undersigned at (571) 272-3214, it is noted that all practice before the Office is in writing (see: 37 C.F.R. §1.2[1]) and the proper authority for action on any matter in this regard are the statutes (35 U.S.C.), regulations (37 C.F.R.) and the commentary on policy (MPEP). Therefore, no telephone discussion may be controlling or considered authority for Petitioner's/Caller's action(s).

John J. Gillon, Jr.
Senior Attorney
Office of Petitions

---

[1] The regulations at 37 C.F.R. §1.2 provide:

§1.2 Business to be transacted in writing.
All business with the Patent and Trademark Office should be transacted in writing. The personal attendance of applicants or their attorneys or agents at the Patent and Trademark Office is unnecessary. The action of the Patent and Trademark Office will be based exclusively on the written record in the Office. No attention will be paid to any alleged oral promise, stipulation, or understanding in relation to which there is disagreement or doubt.

UNITED STATES PATENT AND TRADEMARK OFFICE

Commissioner for Patents
United States Patent and Trademark Office
P.O. Box 1450
Alexandria, VA 22313-1450
www.uspto.gov

TOWNSEND AND TOWNSEND AND CREW, LLP
TWO EMBARCADERO CENTER
EIGHTH FLOOR
SAN FRANCISCO CA 94111-3834

MAILED

JUN 0 3 2009

OFFICE OF PETITIONS

In re Application of	:	
Ryusuke Ito, et al.	:	
Application No. 11/585,747	:	DECISION GRANTING PETITION
Filed: October 23, 2006	:	UNDER 37 CFR 1.313(c)(2)
Attorney Docket No. 26869S-001910US	:	

This is a decision on the petition under 37 CFR 1.313(c)(2), filed June 2, 2009, to withdraw the above-identified application from issue after payment of the issue fee.

The petition is **GRANTED**.

The above-identified application is withdrawn from issue for consideration of a submission under 37 CFR 1.114 (request for continued examination). *See* 37 CFR 1.313(c)(2).

Petitioner is advised that the issue fee paid on May 14, 2009 cannot be refunded. If, however, this application is again allowed, petitioner may request that it be applied towards the issue fee required by the new Notice of Allowance.[1]

Telephone inquiries should be directed to Terri Williams at (571) 272-2991.

This application is being referred to Technology Center AU 2188 for processing of the request for continued examination under 37 CFR 1.114 and for consideration of the concurrently filed information disclosure statement.

Terri Williams

Terri Williams
Petitions Examiner
Office of Petitions

---

[1] *The request to apply the issue fee to the new Notice may be satisfied by completing and returning the new Part B – Fee(s) Transmittal Form (along with any balance due at the time of submission). Petitioner is advised that the Issue Fee Transmittal Form must be completed and timely submitted to avoid abandonment of the application.*

UNITED STATES PATENT AND TRADEMARK OFFICE

COMMISSIONER FOR PATENTS
UNITED STATES PATENT AND TRADEMARK OFFICE
P.O. BOX 1450
ALEXANDRIA, VA 22313-1450
www.uspto.gov

THE MACLEAN – FOGG COMPANY
C/O THE ALDEN LAW GROUP
2122 YORK ROAD, SUITE 180
OAK BROOK, IL 60523

COPY MAILED

DEC 2 2 2008

OFFICE OF PETITIONS

In re Application of
Paul Lew et al
Application No. 11/585,748
Filed: October 24, 2006
Attorney Docket No. 36-9540-6520-0000-5CON

ON PETITION

This is a decision on the petition filed November 13, 2008 under 37 CFR 1.137(b), to revive the above-identified application.

The petition is **GRANTED.**

The above-identified application became abandoned for failure to submit the Issue fee and Publication fee in a timely manner in reply to the Notice of Allowance mailed July 3, 2008, which set a statutory period for reply of three (3) months. Accordingly, the above-identified application became abandoned on October 4, 2008.

The petition satisfies the conditions for revival pursuant to the provisions of 37 CFR 1.137(b) in that (1) the reply in the form of payment of the Issue fee and Publication fee; (2) the petition fee; and (3) the required statement of unintentional delay have been received. Accordingly, the issue fee is accepted as having been unintentionally delayed.

Telephone inquiries concerning this decision should be directed to the undersigned at (571) 272-3210.

This matter is being referred to the Office of Data Management for further processing.

Irvin Dingle
Petitions Examiner
Office of Petitions

UNITED STATES PATENT AND TRADEMARK OFFICE

UNITED STATES DEPARTMENT OF COMMERCE
United States Patent and Trademark Office
Address: COMMISSIONER FOR PATENTS
P.O. Box 1450
Alexandria, Virginia 22313-1450
www.uspto.gov

EXXONMOBIL CHEMICAL COMPANY
5200 BAYWAY DRIVE
P.O. BOX 2149
BAYTOWN, TX 77522-2149

Mail Date: 05/07/2010

Applicant	: Bryan R. Chapman	: DECISION ON REQUEST FOR
Patent Number	: 7619027	: RECALCULATION of PATENT
Issue Date	: 11/17/2009	: TERM ADJUSTMENT IN VIEW
Application No	: 11/585,761	: OF WYETH AND NOTICE OF INTENT TO
Filed	: 10/24/2006	: ISSUE CERTIFICATE OF CORRECTION
		:

The Request for Recalculation is **GRANTED** to the extent indicated.

The patent term adjustment has been determined to be **0** days. The USPTO will *sua sponte* issue a certificate of correction reflecting the amount of PTA days determined by the recalculation.

Prior to the issuance of the certificate of correction, the USPTO will afford patentee an opportunity to be heard and request reconsideration. Accordingly, patentee has **one month or thirty (30) days**, whichever is longer, to file a request for reconsideration of this patent term adjustment calculation. See 35 U.S.C. 154(b)(3)(B)(ii) and 37 CFR 1.322(a)(4). No extensions of time will be granted under 37 CFR 1.136.

Patentee should use document code PET.OP if electronically filing a request for reconsideration of this patent term adjustment calculation. The patentee must also include the information required by 37 CFR 1.705(b)(2) and the fee required by 37 CFR 1.18(e). If patentee does not file a timely request for reconsideration of this patent term adjustment calculation including the information required by 37 CFR 1.705(b)(2) and the fee required by 37 CFR 1.18(e), the USPTO will issue a certificate of correction reflecting the PTA determination noted above.

Patentee should be aware that in order to preserve the right to review in the United States District Court for the District of Columbia of the USPTO patent term adjustment determination, patentee must ensure that he or she also take the steps required under 35 U.S.C. 154(b)(4)(A) in a timely manner. Nothing in the request for recalculation should be construed as providing an alternative time frame for commencing a civil action under 35 U.S.C. 154(b)(4)(A).

Any questions concerning this decision should be directed to the Office of Patent Legal Administration at 571-272-7702.

UNITED STATES PATENT AND TRADEMARK OFFICE

Commissioner for Patents
United States Patent and Trademark Office
P.O. Box 1450
Alexandria, VA 22313-1450
www.uspto.gov

MAILED
FROM DIRECTOR'S OFFICE

DEC 0 6 2006

TECHNOLOGY CENTER 3600

FERNANDEZ & ASSOCIATES LLP
1047 EL CAMINO REAL
SUITE 201
MENLO PARK CA 94025

In re Application of: Dennis Fernandez Serial No.: 11/585,766 Filed: October 23, 2006 Title: BIOINFORMATIC TRANSACTION SCHEME	DECISION ON PETITION TO MAKE SPECIAL FOR NEW APPLICATION UNDER 37 C.F.R. § 1.102 & M.P.E.P. § 708.02

This is a decision on the petition filed on October 23, 2006 to make the above-identified application special for accelerated examination procedure under 37 C.F.R. § 1.102(d).

The petition to make the application special is **DENIED**.

REGULATION AND PRACTICE

To be eligible for accelerated examination under 37 C.F.R. § 1.102(d) and pursuant to the "Change to Practice for Petitions in Patent Applications to Make Special and for Accelerated Examination" published in the Federal Register on June 26, 2006 (71 Fed. Reg. 36323), the following conditions must be satisfied:

1. The application must be a non-reissue utility or design application filed under 37 CFR 1.111(a);
2. The application, the petition and the required fees must be filed electronically using the USPTO's electronic filing system (EFS), or EFS-web; if not filed electronically, a statement asserting that EFS and EFS-web were not available during the normal business hours;
3. The application, at the time of filing, must be complete under 37 CFR 1.51 and in condition for examination;
4. The application must contain three or fewer independent claims and twenty or fewer total claims and the claims must be directed to a single invention.

The application as filed is not eligible for the accelerated examination under 37 C.F.R. § 1.102(d) because it was not filed electronically using the USPTO's electronic filling system

(EFS), or EFS-web. Further, there is no statement that EFS and EFS-web were not available during normal business hours.

For the above-stated reason, the petition is denied. Therefore, the application will be taken-up by the examiner for action in its regular turn.

Any inquiry regarding this decision should be directed to the undersigned at (571) 272-6619.

Randolph A. Reese
Quality Assurance Specialist
Technology Center 3600

UNITED STATES PATENT AND TRADEMARK OFFICE

UNITED STATES DEPARTMENT OF COMMERCE
United States Patent and Trademark Office
Address: COMMISSIONER FOR PATENTS
P.O. Box 1450
Alexandria, Virginia 22313-1450
www.uspto.gov

APPLICATION NO.	FILING DATE	FIRST NAMED INVENTOR	ATTORNEY DOCKET NO.	CONFIRMATION NO.
11/585,806	10/25/2006	Tomoyoshi Kikuchi	063156	7543

7590 07/16/2009
WESTERMAN, HATTORI, DANIELS & ADRIAN, LLP
1250 CONNECTICUT AVENUE, NW
SUITE 700
WASHINGTON, DC 20036

EXAMINER
JOSEPH, DENNIS P

ART UNIT	PAPER NUMBER
2629	

MAIL DATE	DELIVERY MODE
07/16/2009	PAPER

DECISION GRANTING PETITION UNDER 37 CFR 1.138(d)

The declaration of express abandonment is recognized

This is in response to the petition under 37 CFR 1.138(d), requesting for a refund of any previously paid search fee and excess claims fee in the above-identified application.

The petition is granted.

The express abandonment is recognized. Any previously paid search fee and excess claims fee are hereby refunded.

Telephone inquiries should be directed to the Office of Data Management at (571) 272-4200.

Betty Powell

Patent Publication Branch
Office of Data Management

Repln. Ref: 07/16/2009 BPOWELL 0010105300
DA#:502866 Name/Number:11585806
FC: 9204 $860.00 CR

Adjustment date: 07/16/2009 BPOWELL
10/26/2006 HLE333 00000014 11585806
02 FC:1111 -500.00 OP
04 FC:1203 -360.00 OP

FORM PET651G (Rev. 08/07)

UNITED STATES PATENT AND TRADEMARK OFFICE

Commissioner for Patents
United States Patent and Trademark Office
P.O. Box 1450
Alexandria, VA 22313-1450
www.uspto.gov

THOMAS, KAYDEN, HORSTEMEYER & RISLEY, LLP
600 GALLERIA PARKWAY, S.E.
STE 1500
ATLANTA GA 30339-5994

MAILED

MAR 3 0 2010

OFFICE OF PETITIONS

In re Application of	:	
Shuo-Feng Chang, et a.	:	
Application No. 11/585,850	:	DECISION ON PETITION
Filed: October 25, 2006	:	
Attorney Docket No. 250152-1420	:	

This is a decision on the petition, filed December 20, 2009, which is being treated as a petition under 37 CFR 1.181 (no fee) requesting withdrawal of the holding of abandonment in the above-identified application.

The petition is **GRANTED**.

This application was held abandoned for failure to reply to the non-final Office action mailed January 26, 2009, which set a three (3) month shortened statutory period for reply. A Notice of Abandonment was mailed on August 5, 2009.

Petitioner asserts that the Office action dated January 26, 2009 was not received.

A review of the written record indicates an irregularity in the mailing of the Office action of January 26, 2009. In this regard, the Office received a change of address prior to the mailing of the Office action of January 26, 2009. Office records were not updated to reflect this new change of address. Accordingly, as the Office action was mailed to an incorrect address, the Notice of Abandonment mailed August 5, 2009 is hereby vacated and the holding of abandonment withdrawn.

Telephone inquiries regarding this decision should be directed to Terri Johnson at (571) 272-2991.

This application is being referred to the Technology Center technical support staff of Art Unit 2874 for appropriate action on the concurrently filed amendment.

Chris Bottorff
Petitions Examiner
Office of Petitions

UNITED STATES PATENT AND TRADEMARK OFFICE

UNITED STATES DEPARTMENT OF COMMERCE
United States Patent and Trademark Office
Address: COMMISSIONER FOR PATENTS
P.O. Box 1450
Alexandria, Virginia 22313-1450
www.uspto.gov

ANTONELLI, TERRY, STOUT & KRAUS, LLP
1300 NORTH SEVENTEENTH STREET
SUITE 1800
ARLINGTON, VA 22209-3873

Mail Date: 04/21/2010

Applicant	: Osamu Ikeda	: DECISION ON REQUEST FOR
Patent Number	: 7579677	: RECALCULATION of PATENT
Issue Date	: 08/25/2009	: TERM ADJUSTMENT IN VIEW
Appliction No	: 11/585,879	: OF WYETH AND NOTICE OF INTENT TO
Filed	: 10/25/2006	: ISSUE CERTIFICATE OF CORRECTION
		:

The Request for Recalculation is **GRANTED** to the extent indicated.

The patent term adjustment has been determined to be **155** days. The USPTO will *sua sponte* issue a certificate of correction reflecting the amount of PTA days determined by the recalculation.

Prior to the issuance of the certificate of correction, the USPTO will afford patentee an opportunity to be heard and request reconsideration. Accordingly, patentee has **one month or thirty (30) days**, whichever is longer, to file a request for reconsideration of this patent term adjustment calculation. See 35 U.S.C. 154(b)(3)(B)(ii) and 37 CFR 1.322(a)(4). No extensions of time will be granted under 37 CFR 1.136.

Patentee should use document code PET.OP if electronically filing a request for reconsideration of this patent term adjustment calculation. The patentee must also include the information required by 37 CFR 1.705(b)(2) and the fee required by 37 CFR 1.18(e). If patentee does not file a timely request for reconsideration of this patent term adjustment calculation including the information required by 37 CFR 1.705(b)(2) and the fee required by 37 CFR 1.18(e), the USPTO will issue a certificate of correction reflecting the PTA determination noted above.

Patentee should be aware that in order to preserve the right to review in the United States District Court for the District of Columbia of the USPTO patent term adjustment determination, patentee must ensure that he or she also take the steps required under 35 U.S.C. 154(b)(4)(A) in a timely manner. Nothing in the request for recalculation should be construed as providing an alternative time frame for commencing a civil action under 35 U.S.C. 154(b)(4)(A).

Any questions concerning this decision should be directed to the Office of Patent Legal Administration at 571-272-7702.

UNITED STATES PATENT AND TRADEMARK OFFICE

Commissioner for Patents
United States Patent and Trademark Office
P.O. Box 1450
Alexandria, VA 22313-1450
www.uspto.gov

APPLICATION NUMBER	FILING/RECEIPT DATE	FIRST NAMED APPLICANT	ATTORNEY DOCKET NUMBER
11/585,888	10/25/2006	Tsuyoshi Fujihara	060788

KRATZ, QUINTOS & HANSON, LLP
1420 K Street, N.W.
Suite 400
WASHINGTON DC 20005

DATE MAILED: August 31, 2007

DECISION DISMISSING PETITION UNDER 37 CFR 1.138(d)
The declaration of express abandonment will not be recognized

This is in response to the petition under 37 CFR 1.138(d) filed on August 20, 2007, requesting for a refund of any previously paid search fee and excess claims fee in the above-identified application.

The petition is dismissed.

The express abandonment will **not** be recognized for the reason(s) indicated below:

- ☐ The petition was not filed in sufficient time to permit the appropriate officials to recognize the abandonment before an examination has been made of the application. See 37 CFR 1.138(d).
- ☑ The application is not an application filed under 35 U.S.C. 111(a) on or after December 8, 2004.
- ☐ The petition was not signed by a party authorized by 37 CFR 1.33(b)(1), (3) or (4).
- ☐ The petition for express abandonment under 1.138(d) is dismissed because the applicant did not pay any search fee and excess claims fees in the above-identified application.

Any inquiries concerning this decision should be directed to the Pre-Grant Publication Division at (703) 605-4283.

Barbara J. Debnam
Pre-Grant Publication Division

UNITED STATES PATENT AND TRADEMARK OFFICE

Commissioner for Patents
United States Patent and Trademark Office
P.O. Box 1450
Alexandria, VA 22313-1450
www.uspto.gov

APPLICATION NUMBER	FILING/RECEIPT DATE	FIRST NAMED APPLICANT	ATTORNEY DOCKET NUMBER
11/585,888	10/25/2006	Tsuyoshi Fujihara	060788

KRATZ, QUINTOS & HANSON, LLP
1420 K Street, N.W.
Suite 400
WASHINGTON DC 20005

DATE MAILED: December 11, 2007

SUPPLEMENTAL DECISION DISMISSING PETITION UNDER 37 CFR 1.138(d)
The declaration of express abandonment will not be recognized

This is in response to the petition under 37 CFR 1.138(d), requesting for a refund of any previously paid search fee and excess claims fee in the above-identified application.

The petition is dismissed.

The express abandonment will **not** be recognized for the reason(s) indicated below:

- ☑ The petition was not filed in sufficient time to permit the appropriate officials to recognize the abandonment before an examination has been made of the application. See 37 CFR 1.138(d).
- ☐ The application is not an application filed under 35 U.S.C. 111(a) on or after December 8, 2004.
- ☐ The petition was not signed by a party authorized by 37 CFR 1.33(b)(1), (3) or (4).
- ☐ The petition for express abandonment under 1.138(d) is dismissed because the applicant did not pay any search fee and excess claims fees in the above-identified application.

Any inquiries concerning this decision should be directed to the Office of Data Management at (571) 272-4200.

Patent Publication Branch
Office of Data Management

UNITED STATES PATENT AND TRADEMARK OFFICE

Commissioner for Patents
United States Patent and Trademark Office
P.O. Box 1450
Alexandria, VA 22313-1450
www.uspto.gov

MCDERMOTT WILL & EMERY LLP
600 13TH STREET, NW
WASHINGTON DC 20005-3096

COPY MAILED

APR 16 2009

OFFICE OF PETITIONS

In re Application of	:	
Toshihdie Maeda, et al.	:	
Application No. 11/585,892	:	DECISION GRANTING PETITION
Filed: October 25, 2006	:	UNDER 37 CFR 1.313(c)(2)
Attorney Docket No. 071971-0708	:	

This is a decision on the petition under 37 CFR 1.313(c)(2), filed April 14, 2009, to withdraw the above-identified application from issue after payment of the issue fee.

The petition is **GRANTED**.

The above-identified application is withdrawn from issue for consideration of a submission under 37 CFR 1.114 (request for continued examination). *See* 37 CFR 1.313(c)(2).

Petitioner is advised that the issue fee paid on March 6, 2009 cannot be refunded. If, however, this application is again allowed, petitioner may request that it be applied towards the issue fee required by the new Notice of Allowance.[1]

Telephone inquiries should be directed to Terri Williams at (571) 272-2991.

This application is being referred to Technology Center AU 2818 for processing of the request for continued examination under 37 CFR 1.114 and for consideration of the concurrently filed information disclosure statement.

Terri Williams

Terri Williams
Petitions Examiner
Office of Petitions

---

[1] *The request to apply the issue fee to the new Notice may be satisfied by completing and returning the new Part B – Fee(s) Transmittal Form (along with any balance due at the time of submission). Petitioner is advised that the Issue Fee Transmittal Form* ***must*** *be completed and timely submitted to avoid abandonment of the application.*

UNITED STATES PATENT AND TRADEMARK OFFICE

Commissioner for Patents
United States Patent and Trademark Office
P.O. Box 1450
Alexandria, VA 22313-1450
www.uspto.gov

FOLEY AND LARDNER LLP
SUITE 500
3000 K STREET NW
WASHINGTON, DC 20007

COPY MAILED

MAR 0 6 2008

OFFICE OF PETITIONS

In re Application of	:	
Gary Allan KEMP II, et al	:	
Application No. 11/585,905	:	DECISION ON PETITION
Filed: October 25, 2006	:	TO WITHDRAW
Attorney Docket No. 024051-0229	:	FROM RECORD
	:	

This is a decision on the Request to Withdraw as attorney or agent of record under 37 C.F.R. § 1.36(b), filed November 28, 2007.

The request is **DISMISSED** as moot.

A review of the file record indicates that the power of attorney to Foley and Lardner LLP, has been revoked by the assignee of the patent application on November 2, 2007. Accordingly, the request to withdraw under 37 C.F.R. § 1.36(b) is moot.

The correspondence address of record has been changed and the new correspondence address is the address indicated below.

Telephone inquires concerning this decision should be directed to undersigned at 571-272- 6735.

Diane Goodwyn
Petitions Examiner
Office of Petitions

cc: JOE HERNDON
MCDONNELL, BOEHNEN,
HULBERT, & BERGHOFF LLP
300 SOUTH WACKER DRIVE
CHICAGO, IL 60606-6709

UNITED STATES PATENT AND TRADEMARK OFFICE

UNITED STATES DEPARTMENT OF COMMERCE
United States Patent and Trademark Office
Address: COMMISSIONER FOR PATENTS
P.O. Box 1450
Alexandria, Virginia 22313-1450
www.uspto.gov

APPLICATION NUMBER	FILING OR 371(C) DATE	FIRST NAMED APPLICANT	ATTY. DOCKET NO./TITLE
11/585,905	10/25/2006	Gary Allan Kemp II	024051-0229

CONFIRMATION NO. 8193

POWER OF ATTORNEY NOTICE

OC000000028661572

22428
FOLEY AND LARDNER LLP
SUITE 500
3000 K STREET NW
WASHINGTON, DC 20007

Date Mailed: 03/06/2008

NOTICE REGARDING CHANGE OF POWER OF ATTORNEY

This is in response to the Power of Attorney filed 11/02/2007.

- The Power of Attorney to you in this application has been revoked by the assignee who has intervened as provided by 37 CFR 3.71. Future correspondence will be mailed to the new address of record(37 CFR 1.33).

/dcgoodwyn/

Office of Initial Patent Examination (571) 272-4000 or 1-800-PTO-9199

UNITED STATES PATENT AND TRADEMARK OFFICE

Commissioner for Patents
United States Patent and Trademark Office
P.O. Box 1450
Alexandria, VA 22313-1450
www.uspto.gov

FOLEY AND LARDNER LLP
SUITE 500
3000 K STREET NW
WASHINGTON, DC 20007

COPY MAILED

JAN 25 2008

OFFICE OF PETITIONS

In re Application of	:	
Gary Allan KEMP II, et al	:	
Application No. 11/585,906	:	DECISION ON PETITION
Filed: October 25, 2006	:	TO WITHDRAW
Attorney Docket No. 024051-0230	:	FROM RECORD
	:	

This is a decision on the Request to Withdraw as attorney or agent of record under 37 C.F.R. § 1.36(b), filed November 28, 2007.

The request is **DISMISSED** as moot.

A review of the file record indicates that the power of attorney to Foley and Lardner, LLP, has been revoked by the assignee of the patent application on November 6, 2007. Accordingly, the request to withdraw under 37 C.F.R. § 1.36(b) is moot.

The correspondence address of record has been changed and the new correspondence address is the address indicated below.

Telephone inquires concerning this decision should be directed to undersigned at 571-272- 6735.

Diane Goodwyn
Petitions Examiner
Office of Petitions

cc: JOE HERNDON
MCDONNELL, BOEHNEN,
HULBERT & BERGHOFF LLP
300 SOUTH WACKER DRIVE
CHICAGO, IL 60606-6709

UNITED STATES PATENT AND TRADEMARK OFFICE

Commissioner for Patents
United States Patent and Trademark Office
P.O. Box 1450
Alexandria, VA 22313-1450
www.uspto.gov

COPY MAILED

JAN 25 2008

OFFICE OF PETITIONS

FOLEY AND LARDNER LLP
SUITE 500
3000 K STREET NW
WASHINGTON, DC 20007

In re Application of	:	
Gary Allan KEMP II, et al	:	
Application No. 11/585,907	:	DECISION ON PETITION
Filed: October 25, 2006	:	TO WITHDRAW
Attorney Docket No. 024051-0228	:	FROM RECORD
	:	

This is a decision on the Request to Withdraw as attorney or agent of record under 37 C.F.R. § 1.36(b), filed November 28, 2007.

The request is **DISMISSED** as moot.

A review of the file record indicates that the power of attorney to Foley and Lardner, LLP, has been revoked by the assignee of the patent application on November 6, 2007. Accordingly, the request to withdraw under 37 C.F.R. § 1.36(b) is moot.

The correspondence address of record has been changed and the new correspondence address is the address indicated below.

Telephone inquires concerning this decision should be directed to undersigned at 571-272- 6735.

Diane Goodwyn
Petitions Examiner
Office of Petitions

cc: JOE HERNDON
MCDONNELL, BOEHNEN,
HULBERT & BERGHOFF LLP
300 SOUTH WACKER DRIVE
CHICAGO, IL 60606-6709

SPE RESPONSE FOR CERTIFICATE OF CORRECTION

Paper No.: _____

DATE : 04/15/10

TO SPE OF : ART UNIT 3693

SUBJECT : Request for Certificate of Correction for Appl. No.: 11585907 Patent No.: 7676411

Please respond to this request for a certificate of correction within 7 days.

FOR IFW FILES:

Please review the requested changes/corrections as shown in the **COCIN** document(s) in the IFW application image. No new matter should be introduced, nor should the scope or meaning of the claims be changed.

Please complete the response (see below) and forward the completed response to scanning using document code **COCX**.

FOR PAPER FILES:

Please review the requested changes/corrections as shown in the attached certificate of correction. Please complete this form (see below) and forward it with the file to:

Certificates of Correction Branch (C of C)
Randolph Square 9D40-D
Palm Location 7580

You can fax the Directors/SPE response to 571-270-9990

Lamonte Newsome
Certificates of Correction Branch
703-756-1574

Thank You For Your Assistance

The request for issuing the above-identified correction(s) is hereby:
Note your decision on the appropriate box.

❑ **Approved**	**All** changes apply.
xApproved in Part	Specify below which changes **do not** apply.
❑ **Denied**	State the reasons for denial below.

Comments: The proposed amendment to claim 1, lines 13-14 found on page 2 of the Request for Certification of Correction, (i.e. "please delete 'the user input device to both set a price for the trade order' and insert -- a user input device to both set a price for a trade order --.") should not be entered as it broadens the scope of the claim.

/James Kramer/ 3693
SPE **Art Unit**

SPE RESPONSE FOR CERTIFICATE OF CORRECTION

SPE RESPONSE FOR CERTIFICATE OF CORRECTION

Paper No.: _____

DATE : 06/14/10

TO SPE OF : ART UNIT 3693

SUBJECT : Request for Certificate of Correction for Appl. No.: 11585907 Patent No.: 7676411

Please respond to this request for a certificate of correction within 7 days.

FOR IFW FILES:

Please review the requested changes/corrections as shown in the **COCIN** document(s) in the IFW application image. No new matter should be introduced, nor should the scope or meaning of the claims be changed.

Please complete the response (see below) and forward the completed response to scanning using document code **COCX**.

FOR PAPER FILES:

Please review the requested changes/corrections as shown in the attached certificate of correction. Please complete this form (see below) and forward it with the file to:

Certificates of Correction Branch (C of C)
Randolph Square 9D40-D
Palm Location 7580

You can fax the Directors/SPE response to 571-270-9990

Lamonte Newsome

Certificates of Correction Branch

703-756-1574

Thank You For Your Assistance

The request for issuing the above-identified correction(s) is hereby:

Note your decision on the appropriate box.

X Approved	**All** changes apply.
❑ **Approved in Part**	Specify below which changes **do not** apply.
❑ **Denied**	State the reasons for denial below.

Comments: _____

/James A Kramer/ _____

SPE RESPONSE FOR CERTIFICATE OF CORRECTION

SPE **Art Unit**

UNITED STATES PATENT AND TRADEMARK OFFICE

UNITED STATES DEPARTMENT OF COMMERCE
United States Patent and Trademark Office
Address: COMMISSIONER FOR PATENTS
P.O. Box 1450
Alexandria, Virginia 22313-1450
www.uspto.gov

North Star Intellectual Property Law, PC
P.O. Box 34688
Washington, DC 20043

Mail Date: 04/21/2010

Applicant	: Kyung-geun Lee	: DECISION ON REQUEST FOR
Patent Number	: 7584403	: RECALCULATION of PATENT
Issue Date	: 09/01/2009	: TERM ADJUSTMENT IN VIEW
Appliction No	: 11/585,952	: OF WYETH
Filed	: 10/25/2006	:
		:

The Patentee's Request for Recalculation is **DISMISSED.**

This Request is deemed ineligible for consideration for one or more of the following reasons:

(A). The patent for which PTA recalculation is requested is either a design or reissue application or is a reexamination proceeding;

(B). The patent for which PTA recalculation is requested resulted from a utility or plant application filed under 35 USC 111(a) before May 29, 2000 and no CPA filed in the application on/after May 29, 2000;

(C). The patent for which PTA recalculation is requested resulted from an international application in which the international filing date was before May 29, 2000 and no CPA filed in the application on/after May 29, 2000;

(D). The patent for which PTA recalculation is requested issued on/after March 2, 2010;

(E). The Request for Recalculation was filed more than 180 days after the grant date of the patent and the request was not filed within two months of a dismissal of a request for reconsideration of the of the patent term under 37 CFR 1.705(d);

(F). The Request for Recalculation is not solely limited to USPTO pre-Wyeth interpretation of 35 U.S.C. 154(b)(2)(A);

or

(G). A civil action was filed pursuant to 35 U.S.C. 154(b)(4)(A)concerning the same patent at issue in this request.

Patentee may file a reply to this decision dismissing the Request for Recalculation. Patentee must file such reply within one month or thirty days, whichever is longer, of the mail date of the decision dismissing the Request for Recalculation. No fee is required if patentee is asserting in the reply that the dismissal for ineligibility is improper.

Patentee should use document code PET.OP if electronically filing a reply to this dismissal. If the USPTO finds that the request was improperly deemed ineligible, the USPTO will mail applicant a recalculation determination.

Patentee should be aware that in order to preserve the right to review in the United States District Court for the District of Columbia of the USPTO patent term adjustment determination, patentee must ensure that he or she also take the steps required under 35 U.S.C. 154(b)(4)(A). Nothing in the request for recalculation should be construed as providing an alternative time frame for commencing a civil action under 35 U.S.C. 154 (b)(4)(A).

Any questions concerning this decision should be directed to the Office of Patent Legal Administration at 571-272-7702.

UNITED STATES PATENT AND TRADEMARK OFFICE

Commissioner for Patents
United States Patent and Trademark Office
P.O. Box 1450
Alexandria, VA 22313-1450
www.uspto.gov

FOLEY AND LARDNER LLP
SUITE 500
3000 K STREET NW
WASHINGTON, DC 20007

COPY MAILED

JAN 25 2008

OFFICE OF PETITIONS

In re Application of	:	
Gary Allan KEMP II, et al	:	
Application No. 11/585,966	:	DECISION ON PETITION
Filed: October 25, 2006	:	TO WITHDRAW
Attorney Docket No. 024051-0231	:	FROM RECORD
	:	

This is a decision on the Request to Withdraw as attorney or agent of record under 37 C.F.R. § 1.36(b), filed November 28, 2007.

The request is **DISMISSED** as moot.

A review of the file record indicates that the power of attorney to Foley and Lardner, LLP, has been revoked by the assignee of the patent application on November 6, 2007. Accordingly, the request to withdraw under 37 C.F.R. § 1.36(b) is moot.

The correspondence address of record has been changed and the new correspondence address is the address indicated below.

Telephone inquires concerning this decision should be directed to undersigned at 571-272- 6735.

Diane Goodwyn
Petitions Examiner
Office of Petitions

cc: JOE HERNDON
MCDONNELL, BOEHNEN,
HULBERT & BERGHOFF LLP
300 SOUTH WACKER DRIVE
CHICAGO, IL 60606-6709

UNITED STATES PATENT AND TRADEMARK OFFICE

UNITED STATES DEPARTMENT OF COMMERCE
United States Patent and Trademark Office
Address: COMMISSIONER FOR PATENTS
P.O. Box 1450
Alexandria, Virginia 22313-1450
www.uspto.gov

BACON & THOMAS, PLLC
625 SLATERS LANE
FOURTH FLOOR
ALEXANDRIA, VA 22314-1176

Mail Date: 04/21/2010

Applicant	: Min-Nan Lai	: DECISION ON REQUEST FOR
Patent Number	: 7601854	: RECALCULATION of PATENT
Issue Date	: 10/13/2009	: TERM ADJUSTMENT IN VIEW
Appliction No	: 11/586,001	: OF WYETH AND NOTICE OF INTENT TO
Filed	: 10/25/2006	: ISSUE CERTIFICATE OF CORRECTION
		:

The Request for Recalculation is **GRANTED** to the extent indicated.

The patent term adjustment has been determined to be **0** days. The USPTO will *sua sponte* issue a certificate of correction reflecting the amount of PTA days determined by the recalculation.

Prior to the issuance of the certificate of correction, the USPTO will afford patentee an opportunity to be heard and request reconsideration. Accordingly, patentee has **one month or thirty (30) days**, whichever is longer, to file a request for reconsideration of this patent term adjustment calculation. See 35 U.S.C. 154(b)(3)(B)(ii) and 37 CFR 1.322(a)(4). No extensions of time will be granted under 37 CFR 1.136.

Patentee should use document code PET.OP if electronically filing a request for reconsideration of this patent term adjustment calculation. The patentee must also include the information required by 37 CFR 1.705(b)(2) and the fee required by 37 CFR 1.18(e). If patentee does not file a timely request for reconsideration of this patent term adjustment calculation including the information required by 37 CFR 1.705(b)(2) and the fee required by 37 CFR 1.18(e), the USPTO will issue a certificate of correction reflecting the PTA determination noted above.

Patentee should be aware that in order to preserve the right to review in the United States District Court for the District of Columbia of the USPTO patent term adjustment determination, patentee must ensure that he or she also take the steps required under 35 U.S.C. 154(b)(4)(A) in a timely manner. Nothing in the request for recalculation should be construed as providing an alternative time frame for commencing a civil action under 35 U.S.C. 154(b)(4)(A).

Any questions concerning this decision should be directed to the Office of Patent Legal Administration at 571-272-7702.

UNITED STATES PATENT AND TRADEMARK OFFICE

Commissioner for Patents
United States Patent and Trademark Office
P.O. Box 1450
Alexandria, VA 22313-1450
www.uspto.gov

DONALD E. SCHREIBER
P.O. BOX 2926
KINGS BEACH, CA 96143-2926

COPY MAILED
DEC 22 2008

In re Application of	:	
George J. **LOW**	:	
Application No. 11/586,012	:	DECISION ON PETITION
Filed: February 1, 2007	:	TO MAKE SPECIAL UNDER
Attorney Docket No. **2252**	:	37 CFR 1.102(c)(1)
	:	

This is a decision on the petition under 37 CFR 1.102(c)(1), filed November 26, 2008, to make the above-identified application special based on applicant's age as set forth in M.P.E.P. § 708.02, Section IV.

The petition is **GRANTED**.

A grantable petition to make an application special under 37 CFR 1.102(c)(1) and MPEP § 708.02, Section IV: Applicant's Age must be accompanied by evidence showing that at least one of the applicants is 65 years of age, or more, such as a birth certificate or a statement by applicant. No fee is required

The instant petition includes the certification and drivers license of inventor George John Low, attesting to his age. Accordingly, the above-identified application has been accorded "special" status.

Inquiries concerning either the examination or status of the application should be directed to the Technology Center at 571-272-3600.

Telephone inquiries concerning this decision should be directed to the undersigned at 571-272-7253.

The application is being forwarded to the Technology Center Art Unit 3632 for action on the merits commensurate with this decision.

/Monica A. Graves/
Petitions Examiner
Office of Petitions

UNITED STATES PATENT AND TRADEMARK OFFICE

Commissioner for Patents
United States Patent and Trademark Office
P.O. Box 1450
Alexandria, VA 22313-1450
www.uspto.gov

Galasso & Associates, LP
P.O. Box 26503
Austin TX 78755-0503

MAILED

FEB 17 2009

OFFICE OF PETITIONS

In re Application of
Remelin
Application No. 11/586,014
Filed: October 25, 2006
Attorney Docket No. 1723.060584
For: BIOMETRIC THUMBPRINT LOCK APPARATUS AND METHOD

DECISION GRANTING PETITION UNDER 37 CFR 1.181

This is a decision on the petition under 37 CFR 1.181, filed January 28, 2009, to withdraw the holding of abandonment in the above-identified application.

The petition under 37 CFR 1.181 is **GRANTED**.

This application was held abandoned due to applicant's alleged failure to reply within three months of the mailing date of the May 2, 2008 non-final Office action. The Office contended that this application became abandoned on August 3, 2008. A Notice of Abandonment was mailed on December 19, 2008.

Petitioner asserts that a reply was timely filed on certificate of mailing date August 1, 2008. In support of this assertion, petitioner has provided a copy of applicant's amendment and response that contains a proper certificate of mailing bearing an August 1, 2008 date of deposit.

Under 37 C.F.R. § 1.8(a)(1) correspondence is considered timely if: (1) the correspondence is mailed or transmitted prior to expiration of the set period for response by being properly addressed to the Patent and Trademark Office as set out in 37 C.F.R. § 1.1(a) and deposited with the U.S. Postal Service with sufficient postage as first class mail or transmitted to the Patent and Trademark Office in accordance with 37 C.F.R. § 1.6(d); and (2) the correspondence includes a certificate for each piece of correspondence stating the date of deposit or transmission. The person signing the certificate should have a reasonable basis to expect that the correspondence would be mailed or transmitted on or before the date indicated.

The "**AMENDMENT AND RESPONSE**" bears a proper certificate of mailing, dated August 1, 2008, in compliance with the requirements of 37 C.F.R. § 1.8(a)(1) as set forth above. Petitioner has established that a timely reply to the May 2, 2008 non-final Office action was mailed on certificate of mailing date August 1, 2008.

Applicant has submitted a copy of her return postcard receipt for the August 1, 2008 amendment and response. However, the stamp on the postcard is illegible. Therefore, the return postcard cannot prove what was filed on that day. MPEP 503

On the strength of the Rule 1.8 showing, the petition under 37 CFR 1.181 is **GRANTED**, the holding of abandonment is withdrawn, and the December 19, 2008 Notice of Abandonment is vacated.

After the mailing of this decision, the application file will be returned to Technology Center G.A.U. 3641 for consideration of the amendment filed on certificate of mailing date August 1, 2008 and resubmitted with the present petition.

Any inquiries pertaining to this matter may be directed to the undersigned at (571) 272-3230.

Shirene Willis Brantley

Shirene Willis Brantley
Senior Petitions Attorney
Office of Petitions

UNITED STATES PATENT AND TRADEMARK OFFICE

Commissioner for Patents
United States Patent and Trademark Office
P.O. Box 1450
Alexandria, VA 22313-1450
www.uspto.gov

MAILED

JAN 04 2010

OFFICE OF PETITIONS

Winston & Strawn, LLP
Patent Department
1700 K Street, NW
Washington, DC 20006

In re Application of	:	
Yoav Gal	:	
Application No. 11/586,026	:	DECISION ON PETITION
Filed: October 24, 2006	:	TO WITHDRAW
Attorney Docket No. 85167-75200-USU	:	FROM RECORD
	:	

This is a decision on the Request to Withdraw as attorney or agent of record under 37 C.F.R. § 1.36(b), filed November 11, 2009.

The request is **NOT APPROVED.**

The Office will no longer accept address changes to a new practitioner or law firm filed with a Request, absent the filing of a power of attorney to the new representative. The Office will either change the correspondence address of record to the most current address information provided for the assignee of the entire interest who properly became of record under 37 CFR 3.71 or, if no assignee of the entire interest has properly been made of record under 37 CFR 3.71, the most current address information provided for the first named inventor.

Accordingly, the request to withdraw from record cannot be approved because the request to change the correspondence address does not include a proper power of attorney nor is the address that of: (1) the first named inventor; or (2) an assignee of the entire interest under 37 C.F.R 3.71.

All future communications from the Office will continue to be directed to the above-identified address until otherwise properly notified.

Telephone inquiries concerning this decision should be directed to the undersigned at 571-272-4618.

/Kimberly Inabinet/

Kimberly Inabinet
Petitions Examiner
Office of Petitions

cc: Howard Baker – VivoMetrics, Inc.
c/o Ralph C. Francis
Francis Law Group
1942 Embarcadero Street
Oakland, CA 94606

UNITED STATES PATENT AND TRADEMARK OFFICE

Commissioner for Patents
United States Patent and Trademark Office
P.O. Box 1450
Alexandria, VA 22313-1450
www.uspto.gov

HEWLETT-PACKARD COMPANY
INTELLECTUAL PROPERTY ADMINISTRATION
3404 E. HARMONY ROAD
MAIL STOP 35
FORT COLLINS, CO 80528

MAILED

FEB 23 2010

OFFICE OF PETITIONS

In re Application of
Christopher Wilson et al
Application No. 11/586,057
Filed: October 25, 2006
Attorney Docket No. 200503125-1

ON PETITION

This is a decision on the petition filed November 18, 2009 and supplemented on January 29, 2010 under 37 CFR 1.137(b), to revive the above-identified application.

The petition is **GRANTED.**

The above-identified application became abandoned for failure to submit the Issue fee and Publication Fee in a timely manner in reply to the Notice of Allowance mailed August 14, 2009, which set a statutory period for reply of three (3) months. Accordingly, the above-identified application became abandoned on November 15, 2009.

The petition satisfies the conditions for revival pursuant to the provisions of 37 CFR 1.137(b) in that (1) the reply in the form of payment of the Issue fee and Publication Fee; (2) the petition fee; (3) the required statement of unintentional delay have been received. Accordingly, the issue fee is accepted as having been unintentionally delayed.

Telephone inquiries concerning this decision should be directed to the undersigned at (571) 272-3210.

This matter is being referred to the Office of Data Management for further processing.

Irvin Dingle
Petitions Examiner
Office of Petitions

UNITED STATES PATENT AND TRADEMARK OFFICE

Commissioner for Patents
United States Patent and Trademark Office
P.O. Box 1450
Alexandria, VA 22313-1450
www.uspto.gov

Davis & Bujold, P.L.L.C.
112 Pleasant Street
Concord, NH 03301

COPY MAILED

FEB 0 3 2009

OFFICE OF PETITIONS

In re Application of	:	
Nathan Taylor	:	
Application No. 11/586,063	:	DECISION ON PETITION
Filed: October 25, 2006	:	TO WITHDRAW
Attorney Docket No. NATHAN P01AUSP1	:	FROM RECORD
	:	

This is a decision on the Request to Withdraw as attorney or agent of record under 37 C.F.R. § 1.36(b), filed December 18, 2008.

The request is **NOT APPROVED.**

A grantable request to withdraw as attorney/agent of record must be signed by every attorney/agent seeking to withdraw or contain a clear indication that one attorney is signing on behalf of another/others. The Office requires the practitioner(s) requesting withdrawal to certify that he, she, or they have: (1) given reasonable notice to the client, prior to the expiration of the response period, that the practitioner(s) intends to withdraw from employment; (2) delivered to the client or a duly authorized representative of the client all papers and property (including funds) to which the client is entitled; and (3) notified the client of any responses that may be due and the time frame within which the client must respond, pursuant 37 CFR 10.40(c).

The request cannot be approved because there is no indication that the acts noted in the above-identified certifications have been performed. Refer to Form No. PTO/SB/83 (Updated 4/2008).

It should also be noted that the request cannot be approved because no reasons for withdrawal have been provided. The Office cannot, at this time, determine whether practitioner's request is one of the mandatory or permissive reasons enumerated in 37 CFR 10.40. Any subsequent requests must include reasons for withdrawal. Please note that there is a space provided for on PTO/SB/83 (Request to Withdraw as Attorney or Agent) to supply practitioner's reasons.

All future communications from the Office will continue to be directed to the above-listed address until otherwise notified by applicant.

Telephone inquiries concerning this decision should be directed to the undersigned at 571-272-4618.

Kimberly Inabinet
Petitions Examiner
Office of Petitions

cc: Scott A. Daniels
Daniels Patent Law P.L.L.C.
43 Centre Street
Concord, NH 03301

UNITED STATES PATENT AND TRADEMARK OFFICE

Commissioner for Patents
United States Patent and Trademark Office
P.O. Box 1450
Alexandria, VA 22313-1450
www.uspto.gov

Davis & Bujold, P.L.L.C.
112 Pleasant Street
Concord, NH 03301

COPY MAILED

FEB 04 2009

OFFICE OF PETITIONS

In re Application of	:	
Nathan Taylor	:	
Application No. 11/586,063	:	CORRECTED DECISION ON
Filed: October 25, 2006	:	PETITION TO WITHDRAW
Attorney Docket No. NATHAN P01AUSP1	:	FROM RECORD
	:	

This is a corrected decision on the Request to Withdraw as attorney or agent of record under 37 C.F.R. § 1.36(b), filed December 18, 2008.

The request is **NOT APPROVED.**

A grantable request to withdraw as attorney/agent of record must be signed by every attorney/agent seeking to withdraw or contain a clear indication that one attorney is signing on behalf of another/others. The Office requires the practitioner(s) requesting withdrawal to certify that he, she, or they have: (1) given reasonable notice to the client, prior to the expiration of the response period, that the practitioner(s) intends to withdraw from employment; (2) delivered to the client or a duly authorized representative of the client all papers and property (including funds) to which the client is entitled; and (3) notified the client of any responses that may be due and the time frame within which the client must respond, pursuant 37 CFR 10.40(c).

The request cannot be approved because there is no indication that the acts noted in the above-identified certifications have been performed. Refer to Form No. PTO/SB/83 (Updated 4/2008).

The Office cannot approve the request at this time since the reasons provided do not meet any of the conditions under the mandatory or permissive categories enumerated in 37 CFR 10.40. Section 10.40 of Title 37 of the Code of Federal Regulation states, "[a] practitioner shall not withdraw from employment in a proceeding before the Office without permission from the Office[.]" More specifically, 37 CFR 10.40 states, "[i]f paragraph (b) of this section is not applicable, a practitioner may not request permission to withdraw in matter pending before the Office unless such request or such withdrawal is" for one the permissive reasons listed in 37 CFR 10.40(c). The reason set forth in the request does not meet any of the conditions set forth in 37 CFR 10.40.

All future communications from the Office will continue to be directed to the above-listed address until otherwise notified by applicant.

Telephone inquiries concerning this decision should be directed to the undersigned at 571-272-4618.

Kimberly Inabinet
Petitions Examiner
Office of Petitions

cc: Scott A. Daniels
Daniels Patent Law P.L.L.C.
43 Centre Street
Concord, NH 03301

UNITED STATES PATENT AND TRADEMARK OFFICE

Commissioner for Patents
United States Patent and Trademark Office
P.O. Box 1450
Alexandria, VA 22313-1450
www.uspto.gov

COPY MAILED

NOV 1 2 2009

OFFICE OF PETITIONS

CARR & FERRELL LLP
2200 GENG ROAD
PALO ALTO, CA 94303

In re Application of :
George E. RUUL :
Application No. 11/586,095 :
Filed: October 25, 2009 :
Attorney Docket No. **PA3681US** :

DECISION ON PETITION TO WITHDRAW FROM RECORD

This is a decision on the Request to Withdraw as attorney or agent under 37 C.F.R. § 1.36(b) or 37 C.F.R. § 10.40 filed September 12, 2008.

The request is **APPROVED**.

A review of the file record indicates that Susan Yee of CARR & FERRELL LLP: (1) does not have power of attorney in this patent application; and (2) has been employed or otherwise engaged in the proceedings in this patent application. In view of the present decision, Susan Yee and the attorneys associated with customer number 22830 have been withdrawn from the present application and may not prepare or submit papers under 37 C.F.R. § 1.34, or correspond in any manner in this application unless appointed in an acceptable power of attorney under 37 C.F.R. § 1.32(b).

The request to change the correspondence address of record has been accepted. All future communications from the Office will be directed to the sole named signing inventor at the address below until otherwise properly notified by the applicant.

Applicant is reminded that there is no attorney of record at this time. The application became abandoned for failure to timely respond to the non-final Office action mailed February 2, 2009.

Telephone inquires concerning this decision should be directed to the undersigned at 571-272-7253.

/Monica A. Graves/
Petitions Examiner, Office of Petitions

cc: **GEORGE E. RUUL**
LEVEL 1, 694 MILITARY ROAD
MOSMAN, NSW 2088
AUSTRALIA

UNITED STATES PATENT AND TRADEMARK OFFICE

Commissioner for Patents
United States Patent and Trademark Office
P.O. Box 1450
Alexandria, VA 22313-1450
www.uspto.gov

CARR & FERRELL LLP
2200 GENG ROAD
PALO ALTO, CA 94303

COPY MAILED

OCT 2 9 2009

OFFICE OF PETITIONS

In re Application of	:	
George Eino RUUL	:	
Application No. 11/586,096	:	DECISION ON PETITION
Filed: October 25, 2006	:	TO WITHDRAW
Attorney Docket No. PA3698US	:	FROM RECORD
	:	

This is a decision on the Request to Withdraw as attorney or agent under 37 C.F.R. § 1.36(b) filed September 12, 2008.

The request is **NOT APPROVED**.

The Office will no longer approve requests from practitioners to withdraw from applications where the requesting practitioner is acting, or has acted, in a representative capacity pursuant to 37 CFR 1.34. In these situations, the practitioner is responsible for the correspondence the practitioner files in the application while acting in a representative capacity. As such, there is no need for the practitioner to obtain the Office's permission to withdraw from representation. However, practitioners acting in a representative capacity, like practitioners who have a power of attorney in the application, remain responsible for noncompliance with 37 CFR 1.56, as well as 37 CFR 10.18, with respect to documents they file.

A review of the file record indicates that Susan Yee does not have power of attorney in this patent application. See 37 C.F.R. § 10.40. Accordingly, the request to withdraw under 37 C.F.R. § 1.36(b) is not applicable.

All future communications from the Office will continue to be directed to the above-identified address until otherwise properly notified.

Telephone inquires concerning this decision should be directed to the undersigned at 571-272-6735.

/Diane Goodwyn/
Petitions Examiner
Office of Petitions

cc: GEORGE EINO RUUL
LEVEL 1, 694 MILITARY ROAD
MOSMAN NSW 2088
AUSTRALIA

UNITED STATES PATENT AND TRADEMARK OFFICE

Commissioner for Patents
United States Patent and Trademark Office
P.O. Box 1450
Alexandria, VA 22313-1450
www.uspto.gov

CARR & FERRELL LLP
2200 GENG ROAD
PALO ALTO, CA 94303

COPY MAILED

JUN 0 3 2009

OFFICE OF PETITIONS

In re Application of :

George E. Ruul :
Application No. 11/586,122 :
Filed: October 25, 2006 :
Attorney Docket No. **PA3699US** :

DECISION ON PETITION TO WITHDRAW FROM RECORD

This is a decision on the Request to Withdraw as attorney or agent of record under 37 C.F.R. § 1.36(b), filed September 12, 2008.

The request is **APPROVED**.

A grantable request to withdraw as attorney/agent of record must be signed by every attorney/agent seeking to withdraw or contain a clear indication that one attorney is signing on behalf of another/others.

The request was signed by Susan Yee. A review of the file record indicates that Susan Yee, registration No. 41388: (1) does not have power of attorney in this patent application; and (2) has been employed or otherwise engaged in the proceedings in this patent application. In view of the present decision, Susan Ye and all practitioners of record associated with Customer Number 22830 have been withdrawn from the present application and may not prepare or submit papers under 37 C.F.R. § 1.34, or correspond in any manner in this application unless appointed in an acceptable power of attorney under 37 C.F.R. § 1.32(b).

Applicant is reminded that there is no attorney of record at this time.

All future communications from the Office will be directed to the first named signing inventor George E. Ruul at the address below until otherwise properly notified by the applicant.

The application became abandoned for failure to timely respond to the non-final Office action mailed June 30, 2008.

Telephone inquiries concerning this decision should be directed to the undersigned at 571-272-7253.

/Monica A. Graves/
Petitions Examiner, Office of Petitions

cc: **GEORGE E. RUUL**
LEVEL 1, 694 MILITARY ROAD
MOSMAN, NSW 2088
AUSTRALIA

Attachment: Power/Revocation/New Power Of Attorney with Address Change (PTO/SB/81)

UNITED STATES PATENT AND TRADEMARK OFFICE

Commissioner for Patents
United States Patent and Trademark Office
P.O. Box 1450
Alexandria, VA 22313-1450
www.uspto.gov

FROMMER LAWRENCE & HAUG
745 FIFTH AVENUE- 10TH FL.
NEW YORK, NY 10151

MAILED

APR 12 2010

OFFICE OF PETITIONS

In re Application of	:	
Giovanni M. AGNOLI, et al.	:	
Application No. 11/586,133	:	DECISION GRANTING PETITION
Filed: October 25, 2006	:	UNDER 37 CFR 1.313(c)(2)
Attorney Docket No. **450100-04866.4.US**	:	

This is a decision on the petition under 37 CFR 1.313(c)(2), filed April 6, 2010, to withdraw the above-identified application from issue after payment of the issue fee.

The petition is **GRANTED**.

The above-identified application is withdrawn from issue for consideration of a submission under 37 CFR 1.114 (request for continued examination). *See* 37 CFR 1.313(c)(2).

Petitioner is advised that the issue fee paid on April 2, 2010 cannot be refunded. If, however, this application is again allowed, petitioner may request that it be applied towards the issue fee required by the new Notice of Allowance.[1]

Telephone inquiries should be directed to the undersigned at (571) 272-7253.

This application is being referred to Technology Center AU 2452 for processing of the request for continued examination under 37 CFR 1.114 and for consideration of the concurrently filed information disclosure statement.

/Monica A. Graves/
Petitions Examiner, Office of Petitions

---

[1] *The request to apply the issue fee to the new Notice may be satisfied by completing and returning the new Part B – Fee(s) Transmittal Form (along with any balance due at the time of submission). Petitioner is advised that the Issue Fee Transmittal Form* ***must*** *be completed and timely submitted to avoid abandonment of the application.*

UNITED STATES PATENT AND TRADEMARK OFFICE

UNITED STATES DEPARTMENT OF COMMERCE
United States Patent and Trademark Office
Address: COMMISSIONER FOR PATENTS
P.O. Box 1450
Alexandria, Virginia 22313-1450
www.uspto.gov

APPLICATION NO.	FILING DATE	FIRST NAMED INVENTOR	ATTORNEY DOCKET NO.	CONFIRMATION NO.
11/586,139	10/24/2006	Toshiyuki Arai	SONYJP 3.0-748 DIV	9933

7590 09/08/2009
LERNER, DAVID, LITTENBERG,
KRUMHOLZ & MENTLIK
600 SOUTH AVENUE WEST
WESTFIELD, NJ 07090

EXAMINER
BURGESS, BARBARA N

ART UNIT	PAPER NUMBER
2457	

MAIL DATE	DELIVERY MODE
09/08/2009	PAPER

DECISION GRANTING PETITION UNDER 37 CFR 1.138(d)

The declaration of express abandonment is recognized

This is in response to the petition under 37 CFR 1.138(d), requesting for a refund of any previously paid search fee and excess claims fee in the above-identified application.

The petition is granted.

The express abandonment is recognized. Any previously paid search fee and excess claims fee are hereby refunded.

Telephone inquiries should be directed to the Office of Data Management at (571) 272-4200.

Nimi Farmer

Patent Publication Branch
Office of Data Management

Adjustment date: 09/08/2009 NFARMER
10/27/2006 MWOLDGE1 00000012 121095 11586139
02 FC:1111 500.00 CR
04 FC:1201 400.00 CR

FORM PET651G (Rev. 08/07)

UNITED STATES DEPARTMENT OF COMMERCE
Patent and Trademark Office
ASSISTANT SECRETARY OF COMMERCE AND
COMMISSIONER OF PATENTS AND TRADEMARKS
Washington, DC 20231

7/13/09

Patent No. :7367868
Inventor(s) :Memmelaar et al.
Issued : 5/6/2008
Title : CENTERLESS GRINDER
Atty.doc./File No.

Request for Certificates of Correction

Consideration has been given to your request for the issuance of a Certificate of Correction, for the above – identified patent under the provisions of CFR 1.322.

Inspection of the application for the patent reveals that 16 line 50 Claim 4 is printed in accordance with the record. Therefore being no fault on the Patent and Trademark Office, It has no authority to issue a certificate of correction under the provision of 1.322.

In view of the forgoing, your request in this matter, is hereby denied.

Future written correspondence concerning this matter should be filed and directed to Decisions & Certificates of Correction Branch.

Henry Randall
Decisions & Certificates
of Correction Branch
(703) 756-1571

Richard J. Botos
LERNER DAVID LITTENBERG KRUMHOLZ & MENTLIK, LLP
600 South Avenue West
Westfield, New Jersey 07090

HR

UNITED STATES PATENT AND TRADEMARK OFFICE

COMMISSIONER FOR PATENTS
UNITED STATES PATENT AND TRADEMARK OFFICE
P.O. BOX 1450
ALEXANDRIA, VA 22313-1450
www.uspto.gov
DIW Aug-07

FISH & NEAVE IP GROUP
ROPES & GRAY LLP
ONE INTERNATIONAL PLACE
BOSTON MA 02110-2624

COPY MAILED

AUG 0 8 2007

OFFICE OF PETITIONS

In re Application of	:	
Rubin, DePetrillo, Provost,	:	
Rothman, Donahue, and Penner	:	DECISION ACCORDING STATUS
Application Number: 11/586196	:	UNDER 37 CFR 1.47(a)
Filing Date: 10/24/2006	:	
Attorney Docket Number: 104692-0004-101	:	

This is in response to the petition filed under 37 CFR 1.47(a) on 4 May, 2007.

The petition is **GRANTED**.

Petitioners have shown that the non-signing inventor, Sheldon Provost, has refused to sign and return the declaration naming him as a joint inventor along with Benjamin Rubin, Paolo DePetrillo, Daniel Rothman, Jason Donahue, and Julie Penner after having been sent a copy of the application. Specifically, petitioners have shown, that a copy of the application was sent to the non-signing inventor's last known address. The non-signing inventor, however, failed to sign and return the declaration.

It is noted that petitioners state that the non-signing inventor's "last known addresses" are his business and residence addresses. MPEP 409.03(e) states that ordinarily, the last known address will be the last known residence of the non-signing inventor. As such, the residence address provided for the last known address will be construed as the inventor's last known address. Petitioners **must** inform the Office if this is not a correct interpretation.

The above-identified application and papers have been reviewed and found in compliance with 37 CFR 1.47(a). This application is hereby accorded Rule 1.47(a) status.

As provided in Rule 1.47(c), this Office will forward notice of this application's filing to the non-signing inventor at the address given in the Declaration. Notice of the filing of this application will also be published in the *Official Gazette*.

The application is being referred to Technology Center Art Unit 3736 for examination in due course.

Telephone inquiries related to this decision should be directed to the undersigned at 571-272-3231.

D Wood

Douglas I. Wood
Senior Petitions Attorney
Office of Petitions

UNITED STATES PATENT AND TRADEMARK OFFICE

COMMISSIONER FOR PATENTS
UNITED STATES PATENT AND TRADEMARK OFFICE
P.O. BOX 1450
ALEXANDRIA, VA 22313-1450
www.uspto.gov
DIW Aug-07

Sheldon Provost
336 Acoma Way
Fremont CA 94539

COPY MAILED

AUG 08 2007

OFFICE OF PETITIONS

In re Application of
Rubin et al.
Application No. 11/586,196
Filed:24 October, 2006
For: SYSTEMS AND METHODS FOR SLEEP MONITORING

Dear Mr. Provost:

You are named as a joint inventor in the above identified United States patent application, filed under the provisions of 35 U.S.C. 116 (United States Code), and 37 CFR 1.47(a), Rules of Practice in Patent Cases. Should a patent be granted on the application you will be designated therein as a joint inventor.

As a named inventor you are entitled to inspect any paper in the file wrapper of the application, order copies of all or any part thereof (at a prepaid cost per 37 CFR 1.19) or make your position of record in the application. Alternatively, you may arrange to do any of the preceding through a registered patent attorney or agent presenting written authorization from you. If you care to join the application, counsel of record (see below) would presumably assist you. Joining in the application would entail the filing of an appropriate oath or declaration by you pursuant to 37 CFR 1.63.

Telephone inquiries regarding this communication should be directed to the undersigned at 571/272-3231. Requests for information regarding your application should be directed to the File Information Unit at 571-272-3150. Information regarding how to pay for and order a copy of the application, or a specific paper in the application, should be directed to Certification Division at 571-272-3150 or 1-800-972-6382 (outside the Washington D.C. area).

D Wood

Douglas I. Wood
Senior Petitions Attorney
Office of Petitions

FISH AND NEAVE IP GROUP
ROPES & GRAY LLP
ONE INTERNATIONAL PLACE
BOSTON MA 02110-2624

UNITED STATES PATENT AND TRADEMARK OFFICE

Commissioner for Patents
United States Patent and Trademark Office
P.O. Box 1450
Alexandria, VA 22313-1450
www.uspto.gov

RAJ ABHYANKER, LLP
C/O INTELLEVATE
P.O. BOX 52050
MINNEAPOLIS, MN 55402

COPY MAILED

MAR 06 2008

OFFICE OF PETITIONS

In re Application of	:	
Alec S. ANDRONIKOV, et al	:	
Application No. 11/586,204	:	DECISION ON PETITION
Filed: August 16, 2006	:	TO WITHDRAW
Attorney Docket No. 00049.00003US1	:	FROM RECORD
	:	

This is a decision on the Request to Withdraw as attorney or agent of record under 37 C.F.R. § 1.36(b), filed December 6, 2007.

The request is **NOT APPROVED**.

A grantable request to withdraw as attorney/agent of record must be signed by every attorney/agent seeking to withdraw or contain a clear indication that one attorney is signing on behalf of another/others. A request to withdraw will not be approved unless at least 30 (thirty) days would remain between the date of approval and the later of the expiration date of a time to file a response or the expiration date of the maximum time period which can be extended under 37 C.F.R. § 1.136(a).

The request cannot be approved because the attorneys of record were not appointed by customer number.

All future communications from the Office will continue to be directed to the above-listed address until otherwise notified by applicant.

There are no outstanding Office actions pending at the present time.

Telephone inquiries concerning this decision should be directed to the undersigned at 571-272-6735.

Diane Goodwyn
Petitions Examiner
Office of Petitions

cc: INFREEDA, INC.
809B CUESTA DRIVE, SUITE 204
MOUNTAIN VIEW, CA 94040

UNITED STATES PATENT AND TRADEMARK OFFICE

Commissioner for Patents
United States Patent and Trademark Office
P.O. Box 1450
Alexandria, VA 22313-1450
www.uspto.gov

CARR & FERRELL LLP
2200 Geng Road
Palo Alto, CA 94303

MAILED

OCT 16 2009

OFFICE OF PETITIONS

In re Application of	:	
George Eino Ruul	:	
Application No. 11/586,213	:	DECISION ON PETITION
Filed: October 25, 2006	:	TO WITHDRAW
Attorney Docket No. PA3682US	:	FROM RECORD
	:	

This is a decision on the Request to Withdraw as attorney or agent of record under 37 C.F.R. § 1.36(b), filed September 12, 2008.

The request is **APPROVED**.

A grantable request to withdraw as attorney/agent of record must be signed by every attorney/agent seeking to withdraw or contain a clear indication that one attorney is signing on behalf of another/others. A request to withdraw will not be approved unless at least 30 (thirty) days would remain between the date of approval and the later of the expiration date of a time to file a response or the expiration date of the maximum time period which can be extended under 37 C.F.R. § 1.136(a).

The request was signed by Susan Yee on behalf of all attorneys of record. All attorneys/agents have been withdrawn. Applicant is reminded that there is no attorney of record at this time.

All future correspondence will be directed to the first named inventor George Eino Ruul at the address indicated below.

Telephone inquiries concerning this decision should be directed to Terri Johnson at 571-272-2991.

T. Johnson

Terri Johnson
Petitions Examiner
Office of Petitions

cc: **George Eino Ruul**
Level 1, Military Road
Mosman, NSW 2088
Australia

UNITED STATES PATENT AND TRADEMARK OFFICE

UNITED STATES DEPARTMENT OF COMMERCE
United States Patent and Trademark Office
Address: COMMISSIONER FOR PATENTS
P.O. Box 1450
Alexandria, Virginia 22313-1450
www.uspto.gov

APPLICATION NUMBER	FILING OR 371(C) DATE	FIRST NAMED APPLICANT	ATTY. DOCKET NO./TITLE
11/586,213	10/25/2006	George Eino Ruul	PA3682US

CONFIRMATION NO. 9160

POWER OF ATTORNEY NOTICE

22830
CARR & FERRELL LLP
2200 GENG ROAD
PALO ALTO, CA 94303

OC000000038314203

Date Mailed: 10/16/2009

NOTICE REGARDING CHANGE OF POWER OF ATTORNEY

This is in response to the Power of Attorney filed 09/12/2008.

- The withdrawal as attorney in this application has been accepted. Future correspondence will be mailed to the new address of record. 37 CFR 1.33.

/tsjohnson/

Office of Data Management, Application Assistance Unit (571) 272-4000, or (571) 272-4200, or 1-888-786-0101

UNITED STATES PATENT AND TRADEMARK OFFICE

Commissioner for Patents
United States Patent and Trademark Office
P.O. Box 1450
Alexandria, VA 22313-1450
www.uspto.gov

MORRISON & FOERSTER LLP
12531 HIGH BLUFF DRIVE
SUITE 100
SAN DIEGO CA 92130-2040

COPY MAILED

AUG 1 1 2008

OFFICE OF PETITIONS

In re Application of	:	
Janoff, et al.	:	DECISION REFUSING STATUS
Application No. 11/586,215	:	UNDER 37 CFR 1.47(a)
Filed: October 25, 2006	:	
Attorney Docket No. 532552002100	:	

This decision is mailed in response to the partial petition under 37 CFR 1.47(a), filed June 12, 2007.

The partial petition is **dismissed** and the merits of the partial petition will not be addressed because the partial petition is not signed by a proper party. No additional petition fee will be due when petitioners file a reconsideration petition.

Rule 47 applicants are given TWO (2) MONTHS from the mailing date of this decision to reply, correcting the below-noted deficiencies. Any reply should be entitled "Request for Reconsideration of Petition Under 37 CFR 1.47(a)," and should only address the deficiencies noted below, except that the reply may include an oath or declaration executed by the non-signing inventor. **FAILURE TO RESPOND WILL RESULT IN ABANDONMENT OF THE APPLICATION.** Any extensions of time will be governed by 37 CFR 1.136(a).

A review of the application file reveals that a formal Rule 47(a) petition has not been filed. A "DECLARATION OF LAWRENCE D. MAYER UNDER 37 CFR 1.47(A)" was filed on June 12, 2007. However, the document is a statement of facts and, at best, can only be considered a partial petition signed by Lawrence D. Mayer.

37 CFR 1.33(b) states that any amendments and other papers filed in an application must be signed by (1) an appointed registered attorney or agent; (2) a registered attorney or agent not appointed, but acting in a representative capacity, (3) an assignee under 3.71(b); or (4) all of the named inventors.

Lawrence D. Mayer has not provided an attorney registration number and a review of Office records does not reveal that a person named Lawrence D. Mayer has been assigned a registration number. Lawrence D. Mayer has not shown that he is an authorized representative of an assignee who has right to take action.

In short, Lawrence D. Mayer has not established that he is permitted to file amendments and other papers in this application.

In any reconsideration petition, applicants are encouraged to file a reconsideration petition selecting **one** of the following courses of action: Either (a) submit Lawrence D. Mayer's registration number; (b) submit an appropriate 3.73(b) statement on behalf of the assignee (if there is one) establishing ownership of the invention signed by a person authorized to act on behalf of the assignee (the person authorized to act on behalf of the assignee should be Lawrence D. Mayer and in this manner, the signature on the partial petition will be ratified); or (c) submit a Rule 47(a) petition signed by a registered practitioner.

Any reconsideration petition should include payment of the $200.00 petition fee.

Further correspondence with respect to this matter should be addressed as follows:

By mail: Mail Stop PETITION
Commissioner for Patents
Post Office Box 1450
Alexandria, VA 22313-1450

By hand: U.S. Patent and Trademark Office
Customer Service Window, Mail Stop Petition
Randolph Building
401 Dulany Street
Alexandria, VA 22314

By FAX: (571) 273-8300 – ATTN: Office of Petitions

Telephone inquiries concerning this decision should be directed to the undersigned at (571) 272-3230.

Shirene Willis Brantley
Senior Petitions Attorney
Office of Petitions

UNITED STATES PATENT AND TRADEMARK OFFICE

Commissioner for Patents
United States Patent and Trademark Office
P.O. Box 1450
Alexandria, VA 22313-1450
www.uspto.gov

MORRISON & FOERSTER LLP
12531 HIGH BLUFF DRIVE
SUITE 100
SAN DIEGO CA 92130-2040

COPY MAILED

SEP 3 0 2008

OFFICE OF PETITIONS

In re Application of	:	
Janoff, et al.	:	DECISION ACCORDNG STATUS
Application No. 11/586,215	:	UNDER 37 CFR 1.47(a)
Filed: October 25, 2006	:	
Attorney Docket No. 532552002100	:	

This decision is mailed in response to the renewed petition under 37 CFR 1.47(a), filed September 8, 2008.

Petitioners have shown that the non-signing inventor, John Redman, has constructively refused to join in the filing of the above-identified application.

The application and papers have been reviewed and found in compliance with 37 CFR 1.47(a). This application is hereby accorded Rule 1.47(a) status.

As provided in 37 CFR 1.47(c), this Office will forward notice of this application's filing to the non-signing inventor at the address given in the petition. Notice of the filing of this application will also be published in the Official Gazette.

This application is being referred to the Office of Patent Application Processing for further pre-examination processing.

Telephone inquiries concerning this decision should be directed to the undersigned at (571) 272-3230.

Shirene Willis Brantley

Shirene Willis Brantley
Senior Petitions Attorney
Office of Petitions

UNITED STATES PATENT AND TRADEMARK OFFICE

Commissioner for Patents
United States Patent and Trademark Office
P.O. Box 1450
Alexandria, VA 22313-1450
www.uspto.gov

JOHN REDMAN
9 HASTINGS DRIVE
MULLICA HILLS NJ 08062

COPY MAILED
SEP 30 2008
OFFICE OF PETITIONS

In re Application of	:	
Janoff, et al.	:	LETTER
Application No. 11/586,215	:	
Filed: October 25, 2006	:	
Attorney Docket No. 532552002100	:	

Dear Mr. Redman:

You are named as a joint inventor in the above-identified United States patent application, filed under the provisions of 35 U.S.C. 116 (United States Code), and 37 CFR 1.47(a), Rules of Practice in Patent Cases. Should a patent be granted on the application you will be designated therein as a joint inventor.

As a named inventor you are entitled to inspect any paper in the file wrapper of the application, order copies of all or any part thereof (at a prepaid cost per 37 CFR 1.19) or make your position of record in the application. Alternatively, you may arrange to do any of the preceding through a registered patent attorney or agent presenting written authorization from you. If you care to join the application, counsel of record (see below) would presumably assist you. Joining the application would entail the filing of an appropriate oath or declaration by you pursuant to 37 CFR 1.63.

Telephone inquiries regarding this communication should be directed to the undersigned at (571) 272-3230. Requests for information regarding your application should be directed to the File Information Unit at (703) 308-2733. Information regarding how to pay for and order a copy of the application, or a specific paper in the application, should be directed to the Certification Division at (571) 272-3150 or 1 (800) 972-6382 (outside the Washington, DC area).

Shirene Willis Brantley
Senior Petitions Attorney
Office of Petitions

ATTORNEYS OF RECORD: MORRISON & FOERSTER LLP
12531 HIGH BLUFF DRIVE
SUITE 100
SAN DIEGO CA 92130-2040

UNITED STATES PATENT AND TRADEMARK OFFICE

COMMISSIONER FOR PATENTS
UNITED STATES PATENT AND TRADEMARK OFFICE
P.O. BOX 1450
ALEXANDRIA, VA 22313-1450
www.uspto.gov

MYERS BIGEL SIBLEY & SAJOVEC
PO BOX 37428
RALEIGH, NC 27627

COPY MAILED
JAN 22 2007
OFFICE OF PETITIONS

In re Application of	:	
Cui, et al.	:	
Filed: October 25, 2006	:	ON PETITION
Application No. 11/586,227	:	
Dkt. No.: 9151-31DV	:	

This is a decision on the "PETITION TO GRANT FILING DATE TO NO-PROVISIONAL APPLICATION," filed January 12, 2007 to accord the above-identified application a filing date of October 25, 2006. This matter is being properly treated under 37 CFR 1.53(e) as a petition to accord the application a filing date of October 25, 2006.

The petition under 37 CFR 1.53(e) is **GRANTED**.

The application was filed October 25, 2006 without drawings. The Notice of Incomplete Nonprovisional Application was mailed November 13, 2006. The Notice indicated, *inter alia*, that the application had not been accorded a filing date because the application appeared to have been submitted without drawings as required per 35 USC 113.

As stated in MPEP 601.01(f), it is the practice of the PTO to treat a non-provisional application that contains at least some disclosure of a process, method, or composition as an application for which a drawing is not necessary for an understanding of the invention under 35 USC 113 (first sentence).

Moreover, MPEP 601.01(f) states that a nonprovisional application having at least one claim, or a provisional application having at least some disclosure, directed to the subject matter discussed above for which a drawing is usually not considered essential for a filing date, describing drawing figure(s) in the specification, but filed without drawings will be treated as an application filed without all of the drawing figures referred to in the specification as discussed in MPEP 601.01(g), so long as the application contains something that can be construed as a written description and the names of all the inventors. Should the Technology Center determine that

drawings are necessary under 35 U.S.C. 113 (first sentence) the filing date issue will be reconsidered by the USPTO.

A review of the official file reveals that the instant application includes at least one process, method, or composition claim. As it is USPTO practice to treat a non-provisional application that contains at least some disclosure of a process, method, or composition as an application for which a drawing is not necessary, the application, as submitted, is entitled to a filing date of October 25, 2006. Thus, the instant petition is unnecessary as the instant application is otherwise entitled to a filing date under 37 CFR 1.53(b). Accordingly, the Notice as it relates to the 35 USC 113 requirement is withdrawn.

The application will be processed with only the papers present on October 25, 2006, without drawings as part of the original disclosure.

The preliminary amendment submitted with the instant petition will be examined in due course.

No fee is has been assessed in connection with this matter.

The application is being returned to the Office of Initial Patent Examination for further processing with a filing date of October 25, 2006 using only the papers present on that day.

Telephone inquiries related to this decision may be directed to the undersigned at (571) 272-3205.

Alesia M. Brown
Petitions Attorney
Office of Petitions

UNITED STATES PATENT AND TRADEMARK OFFICE

UNITED STATES DEPARTMENT OF COMMERCE
United States Patent and Trademark Office
Address: COMMISSIONER FOR PATENTS
P.O. Box 1450
Alexandria, Virginia 22313-1450
www.uspto.gov

BRINKS HOFER GILSON & LIONE
P.O. BOX 10395
CHICAGO, IL 60610

Mail Date: 04/21/2010

Applicant	: Kazuma Sekiya	: DECISION ON REQUEST FOR
Patent Number	: 7648889	: RECALCULATION of PATENT
Issue Date	: 01/19/2010	: TERM ADJUSTMENT IN VIEW
Appliction No	: 11/586,234	: OF WYETH AND NOTICE OF INTENT TO
Filed	: 10/25/2006	: ISSUE CERTIFICATE OF CORRECTION
		:

The Request for Recalculation is **GRANTED** to the extent indicated.

The patent term adjustment has been determined to be **634** days. The USPTO will *sua sponte* issue a certificate of correction reflecting the amount of PTA days determined by the recalculation.

Prior to the issuance of the certificate of correction, the USPTO will afford patentee an opportunity to be heard and request reconsideration. Accordingly, patentee has **one month or thirty (30) days**, whichever is longer, to file a request for reconsideration of this patent term adjustment calculation. See 35 U.S.C. 154(b)(3)(B)(ii) and 37 CFR 1.322(a)(4). No extensions of time will be granted under 37 CFR 1.136.

Patentee should use document code PET.OP if electronically filing a request for reconsideration of this patent term adjustment calculation. The patentee must also include the information required by 37 CFR 1.705(b)(2) and the fee required by 37 CFR 1.18(e). If patentee does not file a timely request for reconsideration of this patent term adjustment calculation including the information required by 37 CFR 1.705(b)(2) and the fee required by 37 CFR 1.18(e), the USPTO will issue a certificate of correction reflecting the PTA determination noted above.

Patentee should be aware that in order to preserve the right to review in the United States District Court for the District of Columbia of the USPTO patent term adjustment determination, patentee must ensure that he or she also take the steps required under 35 U.S.C. 154(b)(4)(A) in a timely manner. Nothing in the request for recalculation should be construed as providing an alternative time frame for commencing a civil action under 35 U.S.C. 154(b)(4)(A).

Any questions concerning this decision should be directed to the Office of Patent Legal Administration at 571-272-7702.

UNITED STATES PATENT AND TRADEMARK OFFICE

Commissioner for Patents
United States Patent and Trademark Office
P.O. Box 1450
Alexandria, VA 22313-1450
www.uspto.gov

PHARMACIA CORPORATION
GLOBAL PATENT DEPARTMENT
POST OFFICE BOX 1027
ST. LOUIS MO 63006

COPY MAILED

OCT 2 6 2006

OFFICE OF PETITIONS

In re Application of	:	
Diane T. Stephenson	:	
Application No. 10/958,145	:	ON PETITION
Filed: October 4, 2004	:	
Attorney Docket No. PHA 4281.1; (01619/1US;	:	

This is a decision on the petition under 37 CFR 1.137(b), filed June 7, 2006, to revive the above-identified application.

The petition is **GRANTED**.

The above-identified application is being revived solely for purposes of continuity. As continuity has been established by this decision reviving the above-identified application, the above-identified application is again abandoned in favor of continuing application filed June 7, 2006.

Telephone inquiries concerning this decision should be directed to the undersigned at (571) 272-3208.

Karen Creasy

Karen Creasy
Petitions Examiner
Office of Petitions

Copied from 10958145 on 11/02/2006

UNITED STATES PATENT AND TRADEMARK OFFICE

UNITED STATES DEPARTMENT OF COMMERCE
United States Patent and Trademark Office
Address: COMMISSIONER FOR PATENTS
P.O. Box 1450
Alexandria, Virginia 22313-1450
www.uspto.gov

KNOBBE MARTENS OLSON & BEAR LLP
2040 MAIN STREET
FOURTEENTH FLOOR
IRVINE, CA 92614

Mail Date: 05/25/2010

Applicant	: Karl S. Johnson	: DECISION ON REQUEST FOR
Patent Number	: 7669064	: RECALCULATION of PATENT
Issue Date	: 02/23/2010	: TERM ADJUSTMENT IN VIEW
Application No	: 11/586,282	: OF WYETH AND NOTICE OF INTENT TO
Filed	: 10/25/2006	: ISSUE CERTIFICATE OF CORRECTION
		:

The Request for Recalculation is **GRANTED** to the extent indicated.

The patent term adjustment has been determined to be **590** days. The USPTO will *sua sponte* issue a certificate of correction reflecting the amount of PTA days determined by the recalculation.

Prior to the issuance of the certificate of correction, the USPTO will afford patentee an opportunity to be heard and request reconsideration. Accordingly, patentee has **one month or thirty (30) days**, whichever is longer, to file a request for reconsideration of this patent term adjustment calculation. See 35 U.S.C. 154(b)(3)(B)(ii) and 37 CFR 1.322(a)(4). No extensions of time will be granted under 37 CFR 1.136.

Patentee should use document code PET.OP if electronically filing a request for reconsideration of this patent term adjustment calculation. The patentee must also include the information required by 37 CFR 1.705(b)(2) and the fee required by 37 CFR 1.18(e). If patentee does not file a timely request for reconsideration of this patent term adjustment calculation including the information required by 37 CFR 1.705(b)(2) and the fee required by 37 CFR 1.18(e), the USPTO will issue a certificate of correction reflecting the PTA determination noted above.

Patentee should be aware that in order to preserve the right to review in the United States District Court for the District of Columbia of the USPTO patent term adjustment determination, patentee must ensure that he or she also take the steps required under 35 U.S.C. 154(b)(4)(A) in a timely manner. Nothing in the request for recalculation should be construed as providing an alternative time frame for commencing a civil action under 35 U.S.C. 154(b)(4)(A).

Any questions concerning this decision should be directed to the Office of Patent Legal Administration at 571-272-7702.

UNITED STATES PATENT AND TRADEMARK OFFICE

Commissioner for Patents
United States Patent and Trademark Office
P.O. Box 1450
Alexandria, VA 22313-1450
www.uspto.gov

BRINKS HOFER GILSON & LIONE/INDY/COOK
BRINKS HOFER GILSON & LIONE
CAPITAL CENTER, SUITE 1100
201 NORTH ILLINOIS STREET
INDIANAPOLIS, IN 46204-4220

COPY MAILED
MAR 15 2010

In re Application of	:	
Case et al.	:	DECISION ON PETITION
Application No. 11/586,285	:	TO WITHDRAW
Filed: October 25, 2006	:	FROM RECORD
Attorney Docket No. 1000-266	:	

This is a decision on the Request to Withdraw as attorney or agent of record under 37 C.F.R. § 1.36(b), filed December 14, 2009.

The request is **DISMISSED** as involving a moot issue.

A review of the file record indicates that the power of attorney was revoked by the Assignee of the patent application on January 20, 2010. Accordingly, the request to withdraw under 37 C.F.R. § 1.36(b) is moot.

All future communications from the Office will be directed to the below-listed address until otherwise properly notified.

Telephone inquires concerning this decision should be directed to the undersigned at 571-272-3206. All other inquires concerning either the examination or status of the application should be directed to the Technology Center.

Liana Walsh
Petitions Examiner
Office of Petitions

cc: BUCHANAN INTELLECTUAL PROPERTY OFFICE LLC
P.O. BOX 700
PERRYSBURG OH 43552-0700

UNITED STATES PATENT AND TRADEMARK OFFICE

Commissioner for Patents
United States Patent and Trademark Office
P.O. Box 1450
Alexandria, VA 22313-1450
www.uspto.gov

ALFRED M. WALKER
225 OLD COUNTRY ROAD
MELVILLE NY 11747-2712

MAILED

JAN 30 2009

OFFICE OF PETITIONS
ON PETITION

In re Application of :
Rampersad :
Application No. 11/586,304 :
Filed: October 25, 2006 :
Attorney Docket No. 261004BreadCIP :
For: EDIBLE MANUALLY HOLDABLE FOOD PRODUCT WITH HYDROPHILIC LIQUID ABSORBENT INSERT

This is a decision on the petition, filed December 22, 2008, under 37 CFR 1.137(b) to revive the above-identified application.

The petition is **GRANTED**.

The above-identified application became abandoned for failure to timely submit a reply within three (3) months of the mailing of the November 28, 2007 non-final Office action. No response being received and no extensions of time being obtained under the provisions of 37 CFR 1.136(a), this application became abandoned on February 28, 2008. A Notice of Abandonment was mailed on August 18, 2008.

Applicant has submitted an amendment and terminal disclaimer in reply to the November 28, 2007 non-final Office action, an acceptable statement of the unintentional nature of the delay in responding to the November 28, 2007 non-final Office action, and the $810.00 petition fee.

All of the requirements under 37 CFR 1.137(b) being met, the petition is granted.

After the mailing of this decision, the application will be returned to Technology Center AU 1794 for consideration of the amendment and terminal disclaimer filed on December 22, 2008.

Telephone inquiries should be directed to the undersigned at (571) 272-3230.

Shirene Willis Brantley

Shirene Willis Brantley
Senior Petitions Attorney
Office of Petitions

UNITED STATES PATENT AND TRADEMARK OFFICE

UNITED STATES DEPARTMENT OF COMMERCE
United States Patent and Trademark Office
Address: COMMISSIONER FOR PATENTS
P.O. Box 1450
Alexandria, Virginia 22313-1450
www.uspto.gov

APPL NO.	FILING OR 371 (c) DATE	ART UNIT	FIL FEE REC'D	ATTY.DOCKET NO	DRAWINGS	TOT CLMS	IND CLMS
11/586,310	10/25/2006	1754	1050	MIT06-08	48	37	2

CONFIRMATION NO. 9788

CORRECTED FILING RECEIPT

OC000000021960991

58406
BARRY W. CHAPIN, ESQ.
CHAPIN INTELLECTUAL PROPERTY LAW, LLC
WESTBOROUGH OFFICE PARK
1700 WEST PARK DRIVE
WESTBOROUGH, MA 01581

Date Mailed: 01/11/2007

Receipt is acknowledged of this regular Patent Application. It will be considered in its order and you will be notified as to the results of the examination. Be sure to provide the U.S. APPLICATION NUMBER, FILING DATE, NAME OF APPLICANT, and TITLE OF INVENTION when inquiring about this application. Fees transmitted by check or draft are subject to collection. Please verify the accuracy of the data presented on this receipt. **If an error is noted on this Filing Receipt, please mail to the Commissioner for Patents P.O. Box 1450 Alexandria Va 22313-1450. Please provide a copy of this Filing Receipt with the changes noted thereon. If you received a "Notice to File Missing Parts" for this application, please submit any corrections to this Filing Receipt with your reply to the Notice. When the USPTO processes the reply to the Notice, the USPTO will generate another Filing Receipt incorporating the requested corrections (if appropriate).**

Applicant(s)

Anastasios John Hart, Somerville, MA;
Alexander Henry Slocum, Bow, NH;
Lucas Carolus van Laake, Eindhoven, NETHERLANDS;

Power of Attorney: The patent practitioners associated with Customer Number **58406**.

Domestic Priority data as claimed by applicant

This appln claims benefit of 60/729,881 10/25/2005

Foreign Applications

If Required, Foreign Filing License Granted: 11/09/2006

The country code and number of your priority application, to be used for filing abroad under the Paris Convention, is US11/586,310

Projected Publication Date: To Be Determined - pending completion of Corrected Papers

Non-Publication Request: No

Early Publication Request: No

**** SMALL ENTITY ****

Title

Apparatus and methods for controlled growth and assembly of nanostructures

Preliminary Class

423

PROTECTING YOUR INVENTION OUTSIDE THE UNITED STATES

Since the rights granted by a U.S. patent extend only throughout the territory of the United States and have no effect in a foreign country, an inventor who wishes patent protection in another country must apply for a patent in a specific country or in regional patent offices. Applicants may wish to consider the filing of an international application under the Patent Cooperation Treaty (PCT). An international (PCT) application generally has the same effect as a regular national patent application in each PCT-member country. The PCT process **simplifies** the filing of patent applications on the same invention in member countries, but **does not result** in a grant of "an international patent" and does not eliminate the need of applicants to file additional documents and fees in countries where patent protection is desired.

Almost every country has its own patent law, and a person desiring a patent in a particular country must make an application for patent in that country in accordance with its particular laws. Since the laws of many countries differ in various respects from the patent law of the United States, applicants are advised to seek guidance from specific foreign countries to ensure that patent rights are not lost prematurely.

Applicants also are advised that in the case of inventions made in the United States, the Director of the USPTO must issue a license before applicants can apply for a patent in a foreign country. The filing of a U.S. patent application serves as a request for a foreign filing license. The application's filing receipt contains further information and guidance as to the status of applicant's license for foreign filing.

Applicants may wish to consult the USPTO booklet, "General Information Concerning Patents" (specifically, the section entitled "Treaties and Foreign Patents") for more information on timeframes and deadlines for filing foreign patent applications. The guide is available either by contacting the USPTO Contact Center at 800-786-9199, or it can be viewed on the USPTO website at http://www.uspto.gov/web/offices/pac/doc/general/index.html.

For information on preventing theft of your intellectual property (patents, trademarks and copyrights), you may wish to consult the U.S. Government website, http://www.stopfakes.gov. Part of a Department of Commerce initiative, this website includes self-help "toolkits" giving innovators guidance on how to protect intellectual property in specific countries such as China, Korea and Mexico. For questions regarding patent enforcement issues, applicants may call the U.S. Government hotline at 1-866-999-HALT (1-866-999-4158).

LICENSE FOR FOREIGN FILING UNDER
Title 35, United States Code, Section 184
Title 37, Code of Federal Regulations, 5.11 & 5.15

GRANTED

The applicant has been granted a license under 35 U.S.C. 184, if the phrase "IF REQUIRED, FOREIGN FILING LICENSE GRANTED" followed by a date appears on this form. Such licenses are issued in all applications where the conditions for issuance of a license have been met, regardless of whether or not a license may be required as set forth in 37 CFR 5.15. The scope and limitations of this license are set forth in 37 CFR 5.15(a) unless an earlier license has been issued under 37 CFR 5.15(b). The license is subject to revocation upon written notification. The date indicated is the effective date of the license, unless an earlier license of similar scope has been granted under 37 CFR 5.13 or 5.14.

This license is to be retained by the licensee and may be used at any time on or after the effective date thereof unless it is revoked. This license is automatically transferred to any related applications(s) filed under 37 CFR 1.53(d). This license is not retroactive.

The grant of a license does not in any way lessen the responsibility of a licensee for the security of the subject matter as imposed by any Government contract or the provisions of existing laws relating to espionage and the national security or the export of technical data. Licensees should apprise themselves of current regulations especially with respect to certain countries, of other agencies, particularly the Office of Defense Trade Controls, Department of State (with respect to Arms, Munitions and Implements of War (22 CFR 121-128)); the Bureau of Industry and Security, Department of Commerce (15 CFR parts 730-774); the Office of Foreign Assets Control, Department of Treasury (31 CFR Parts 500+) and the Department of Energy.

NOT GRANTED

No license under 35 U.S.C. 184 has been granted at this time, if the phrase "IF REQUIRED, FOREIGN FILING LICENSE GRANTED" DOES NOT appear on this form. Applicant may still petition for a license under 37 CFR 5.12, if a license is desired before the expiration of 6 months from the filing date of the application. If 6 months has lapsed from the filing date of this application and the licensee has not received any indication of a secrecy order under 35 U.S.C. 181, the licensee may foreign file the application pursuant to 37 CFR 5.15(b).

UNITED STATES PATENT AND TRADEMARK OFFICE

Commissioner for Patents
United States Patent and Trademark Office
P.O. Box 1450
Alexandria, VA 22313-1450
www.uspto.gov

PHARMACIA & UPJOHN
7000 Portage Road
KZO-300-104
Kalamazoo, MI 49001

MAILED

JUL 29 2009

OFFICE OF PETITIONS

In re Application of	:	
Jay Gregory Calvert et al	:	
Application No. 11/586,328	:	DECISION ON PETITION
Filed: October 25, 2006	:	
Attorney Docket No. PC10278E	:	

This is a decision on the petition filed June 23, 2009, requesting under 37 CFR 1.182, that the previous acceptance of the four terminal disclaimers filed April 22, 2009 be withdrawn and replaced with the terminal disclaimers filed June 23, 2009.

The petition is **GRANTED**.

Petitioners assert that, the purpose of the new terminal disclaimers is to provide a date no earlier than the date of the supplemental reply. As there are remaining claims for which the aforementioned terminal disclaimers were originally proffered, the undersigned has consulted with the examiner in charge of this application, Ali Salimi, and has found that the examiner concurs with petitioners' assertion. Accordingly, the four terminal disclaimers dated April 22, 2009 are withdrawn. The four terminal disclaimers filed June 23, 2009 are approved. USPTO records for the above-identified application have been changed consistent with this decision.

The file does not indicate a change of address has been submitted, although the address given on the petition differs from the address of record. If appropriate, a change of address should be filed in accordance with MPEP 601.03. A courtesy copy of this decision is being mailed to the address given on the petition; however, the Office will mail all future correspondence solely to the address of record.

Telephone inquiries related to this decision should be addressed to the undersigned at (571) – 272-0602.

Thurman K. Page
Petitions Examiner
Office of Petitions

cc: Pfizer, Inc.
Legal Department, 5th Floor
150 East 42nd Street
New York, NY 10017-5755

UNITED STATES PATENT AND TRADEMARK OFFICE

Commissioner for Patents
United States Patent and Trademark Office
P.O. Box 1450
Alexandria, VA 22313-1450
www.uspto.gov

ALLEMAN HALL MCCOY RUSSELL & TUTTLE LLP
806 SW BROADWAY
SUITE 600
PORTLAND OR 97205-3335

COPY MAILED

MAR 1 2 2008

OFFICE OF PETITIONS

In re Application of	:	
Matsuda, Yoshimoto	:	
Application No. 11/586,334	:	DECISION ON PETITION
Filed: October 24, 2006	:	
Attorney Docket No. ACO06336	:	

This is a decision on the petition under the unintentional provisions of 37 CFR 1.137(b), filed February 11, 2008, to revive the above-identified application.

The petition is **GRANTED**.

The petition satisfies the requirements of 37 CFR 1.137(b) in that petitioner has supplied (1) the reply in the form of an Amendment, (2) the petition fee, and (3) a proper statement of unintentional delay.

An extension of time under 37 CFR 1.136 must be filed prior to the expiration of the maximum extendable period for reply. See In re Application of S., 8 USPQ2d 1630, 1631 (Comm'r Pats. 1988). Accordingly, since the $1050.00 extension of time fee submitted with the petition on February 11, 2008 was subsequent to the maximum extendable period for reply, this fee is unnecessary and will be credited to petitioner's deposit account as authorized.

Telephone inquiries concerning this decision should be directed to the undersigned at (571) 272-3206.

This matter is being referred to Technology Center 3747 for further examination on the merits.

Liana Walsh
Petitions Examiner
Office of Petitions

UNITED STATES PATENT AND TRADEMARK OFFICE

Commissioner for Patents
United States Patent and Trademark Office
P.O. Box 1450
Alexandria, VA 22313-1450
www.uspto.gov

Townsend and Townsend and Crew, LLP
Two Embarcadero Center
Eighth Floor
San Francisco, CA 94111-3834

COPY MAILED

OCT 01 2008

OFFICE OF PETITIONS

In re Application of	:	
Lydia Lee Sohn, et al.	:	
Application No. 11/586,337	:	DECISION ON PETITION
Filed: October 24, 2006	:	TO WITHDRAW
Attorney Docket No.	:	FROM RECORD
	:	

This is a decision on the Request to Withdraw as attorney or agent of record under 37 C.F.R. § 1.36(b), filed August 8, 2008.

The request is **APPROVED**.

A grantable request to withdraw as attorney/agent of record must be signed by every attorney/agent seeking to withdraw or contain a clear indication that one attorney is signing on behalf of another/others. A request to withdraw will not be approved unless at least 30 (thirty) days would remain between the date of approval and the later of the expiration date of a time to file a response or the expiration date of the maximum time period which can be extended under 37 C.F.R. § 1.136(a).

The request was signed by Randolph Ted Apple on behalf of all attorneys of record. All attorneys/agents have been withdrawn. Applicant is reminded that there is no attorney of record at this time.

All future correspondence will be directed to the first named inventor Joe Smith at the address indicated below.

The change of address filed on August 8, 2008 has not been accepted because it was not signed by an attorney of record.

There is no outstanding Office action at this time.

Telephone inquiries concerning this decision should be directed to Terri Williams at 571-272-2991.

Terri Williams
Petitions Examiner
Office of Petitions

cc: **Lydia L. Sohn**
5 Campbell Woods Way
Princeton, NJ 08540

cc: **David Heckadon**
Gordon and Resse, LLP
275 Battery Street, Suite 2000
San Francisco, CA 94111

UNITED STATES PATENT AND TRADEMARK OFFICE

UNITED STATES DEPARTMENT OF COMMERCE
United States Patent and Trademark Office
Address: COMMISSIONER FOR PATENTS
P.O. Box 1450
Alexandria, Virginia 22313-1450
www.uspto.gov

APPLICATION NUMBER	FILING OR 371(C) DATE	FIRST NAMED APPLICANT	ATTY. DOCKET NO./TITLE
11/586,337	10/24/2006	Lydia Lee Sohn	022363-000110US

CONFIRMATION NO. 8035

POWER OF ATTORNEY NOTICE

20350
TOWNSEND AND TOWNSEND AND CREW, LLP
TWO EMBARCADERO CENTER
EIGHTH FLOOR
SAN FRANCISCO, CA 94111-3834

OC000000032356170

Date Mailed: 09/30/2008

NOTICE REGARDING CHANGE OF POWER OF ATTORNEY

This is in response to the Power of Attorney filed 08/08/2008.

- The withdrawal as attorney in this application has been accepted. Future correspondence will be mailed to the new address of record. 37 CFR 1.33.

/gbien-aime/

Office of Data Management, Application Assistance Unit (571) 272-4000, or (571) 272-4200, or 1-888-786-0101

UNITED STATES PATENT AND TRADEMARK OFFICE

UNITED STATES DEPARTMENT OF COMMERCE
United States Patent and Trademark Office
Address: COMMISSIONER FOR PATENTS
P.O. Box 1450
Alexandria, Virginia 22313-1450
www.uspto.gov

CANTOR COLBURN, LLP
20 Church Street
22nd Floor
Hartford, CT 06103

Mail Date: 04/20/2010

Applicant	: Donald T. Haynie	: DECISION ON REQUEST FOR
Patent Number	: 7615530	: RECALCULATION of PATENT
Issue Date	: 11/10/2009	: TERM ADJUSTMENT IN VIEW
Appliction No	: 11/586,340	: OF WYETH AND NOTICE OF INTENT TO
Filed	: 10/25/2006	: ISSUE CERTIFICATE OF CORRECTION
		:

The Request for Recalculation is **GRANTED** to the extent indicated.

The patent term adjustment has been determined to be **424** days. The USPTO will *sua sponte* issue a certificate of correction reflecting the amount of PTA days determined by the recalculation.

Prior to the issuance of the certificate of correction, the USPTO will afford patentee an opportunity to be heard and request reconsideration. Accordingly, patentee has **one month or thirty (30) days**, whichever is longer, to file a request for reconsideration of this patent term adjustment calculation. See 35 U.S.C. 154(b)(3)(B)(ii) and 37 CFR 1.322(a)(4). No extensions of time will be granted under 37 CFR 1.136.

Patentee should use document code PET.OP if electronically filing a request for reconsideration of this patent term adjustment calculation. The patentee must also include the information required by 37 CFR 1.705(b)(2) and the fee required by 37 CFR 1.18(e). If patentee does not file a timely request for reconsideration of this patent term adjustment calculation including the information required by 37 CFR 1.705(b)(2) and the fee required by 37 CFR 1.18(e), the USPTO will issue a certificate of correction reflecting the PTA determination noted above.

Patentee should be aware that in order to preserve the right to review in the United States District Court for the District of Columbia of the USPTO patent term adjustment determination, patentee must ensure that he or she also take the steps required under 35 U.S.C. 154(b)(4)(A) in a timely manner. Nothing in the request for recalculation should be construed as providing an alternative time frame for commencing a civil action under 35 U.S.C. 154(b)(4)(A).

Any questions concerning this decision should be directed to the Office of Patent Legal Administration at 571-272-7702.

UNITED STATES PATENT AND TRADEMARK OFFICE

COMMISSIONER FOR PATENTS
UNITED STATES PATENT AND TRADEMARK OFFICE
P.O. BOX 1450
ALEXANDRIA, VA 22313-1450
www.uspto.gov

COPY MAILED

MAR 15 2007

OFFICE OF PETITIONS

PATTERSON, THUENTE, SKAAR & CHRISTENSEN, P.A.
4800 IDS CENTER
80 SOUTH 8TH STREET
MINNEAPOLIS MN 55402-2100

In re Application of :
Marina Lensky : DECISION ON PETITION
Application No. 11/586,353 :
Deposited: October 25, 2006 :
Atty Docket No. 3338.106US01 :

This is a decision on the petition under 37 CFR 1.57(a), filed on January 8, 2007 requesting that the above-identified application be accorded a filing date of October 25 2006, with 4 sheets of drawings containing Figures 1-4 as a part of the original disclosure.

The petition is **dismissed**.

On October 25, 2006, the instant application was deposited without drawings.

Accordingly, on November 13, 2006, the Office of Initial Patent Examination mailed a Notice of Incomplete Nonprovisional Application, stating the application had not been accorded a filing date because the application had been deposited without drawings. A two month period for reply was set.

In response, on October 25, 2006, the present petition and a copy of 4 sheets of drawings were filed.

Petitioners admit that the 4 sheets of drawings were inadvertently omitted from the application papers filed on October 25, 2006, but states that this application claims contains a claim for benefit under 35 U.S.C. § 119(a)-(d) of prior-filed French application No. 05 532 46, filed on October 25, 2005, which contains the omitted drawings. Petitioner further states that a proper claim for benefit was made to the prior-filed foreign application in the specification filed with the original application papers.

As stated in MPEP 601.01(f), it is the practice of the PTO to treat a nonprovisional application that contains at least some disclosure of a process or method as an application for which a drawing is <u>not</u> necessary for an understanding of the invention under 35 U.S.C. 113 (first sentence).

MPEP 601.01(f) also states that:

> A nonprovisional application having at least one claim, or a provisional application having at least some disclosure, directed to the subject matter discussed above for which a drawing is usually not considered essential for a filing date, describing drawing figure(s) in the specification, but filed without drawings will be treated as an application filed without all of the drawing figures referred to in the specification as discussed in MPEP 601.01(g), so long as the application contains something that can be construed as a written description and the names of all the inventors.

As a review of the official file reveals that the application includes at least one method claim(s).

In view of the above, the "Notice" mailed November 13, 2006, was mailed in error and is hereby withdrawn.

MPEP 201.06(c)(IV) states that:

> An applicant may incorporate by reference the prior application by including, in the application-as-filed, a statement that such specifically enumerated prior application or applications are "hereby incorporated herein by reference." The statement may appear in the specification or in the application transmittal letter. The inclusion of this incorporation by reference of the prior application(s) will permit an applicant to amend the continuing application to include any subject matter in such prior application(s), <u>without the need for a petition</u>.
>
> (emphasis supplied)
>
> For applications filed on or after September 21, 2004, a claim under 35 U.S.C. 120 and 37 CFR 1.78 for benefit of a prior-filed nonprovisional application or international application designating the U.S. that was present on the filing date of the continuation or divisional application is considered an incorporation by reference of the prior-filed application as to inadvertently omitted material, subject to the conditions and requirements of 37 CFR 1.57(a).

MPEP 201.06(c)(IV)(B) further states that:

> If a continuation or divisional application as originally filed on or after September 21, 2004 does not include an explicit incorporation by reference statement and is entitled to a filing date despite the inadvertent omission

> of a portion of the prior application(s), applicant may be permitted to add the omitted material by way of an amendment under 37 CFR 1.57(a). Such an amendment must be made within any time period set by the Office. See 37 CFR 1.57(a)(1). If an application as originally filed included a proper explicit incorporation by reference statement (or an explicit incorporation by reference statement that has been made effective under 37 CFR 1.57(g)), the omitted specification page(s) and/or drawing figure(s) may be added by amendment provided the omitted item(s) contains only subject matter in common with a document that has been properly incorporated by reference. If the Office identified the omitted item(s) in a "Notice of Omitted Item(s)," applicant need not respond to the "Notice of Omitted Item(s)." Applicant should, however, submit the amendment adding the omitted material prior to the first Office action to avoid delays in the prosecution of the application. See MPEP § 601.01(d) and § 601.01(g).

Accordingly, applicants may wish to consider filing the omitted figures as an amendment under 37 CFR 1.57(a). If the omitted figures are filed as an amendment under 37 CFR 1.57(a), the amendment will be reviewed by the examiner for new matter.

As the petition was necessitated by an error on the part of the USPTO, the petition fee will be refunded.

The application will be processed and examined with a filing date of **October 25, 2006**, using only the application papers present on filing. The sheets of drawings and the other application papers filed with the present petition will not be used for processing or examination, but will be retained in the application file.

The application will be referred to the Office of Initial Patent Examination for further processing with a filing date of **October 25, 2006**, using only the application papers present on filing.

Telephone inquiries specific to this decision should be directed to Petitions Attorney Charlema R. Grant at 571.272.3215.

Charles A. Pearson
Director
Office of Petitions

UNITED STATES PATENT AND TRADEMARK OFFICE

UNITED STATES DEPARTMENT OF COMMERCE
United States Patent and Trademark Office
Address: COMMISSIONER FOR PATENTS
P.O. Box 1450
Alexandria, Virginia 22313-1450
www.uspto.gov

ROCKWELL AUTOMATION, INC./BF
ATTENTION: SUSAN M. DONAHUE, E-7F19
1201 SOUTH SECOND STREET
MILWAUKEE, WI 53204

Mail Date: 04/20/2010

Applicant	: Norman S. Shelvik	: DECISION ON REQUEST FOR
Patent Number	: 7617412	: RECALCULATION of PATENT
Issue Date	: 11/10/2009	: TERM ADJUSTMENT IN VIEW
Appliction No	: 11/586,355	: OF WYETH AND NOTICE OF INTENT TO
Filed	: 10/25/2006	: ISSUE CERTIFICATE OF CORRECTION
		:

The Request for Recalculation is **GRANTED** to the extent indicated.

The patent term adjustment has been determined to be **444** days. The USPTO will *sua sponte* issue a certificate of correction reflecting the amount of PTA days determined by the recalculation.

Prior to the issuance of the certificate of correction, the USPTO will afford patentee an opportunity to be heard and request reconsideration. Accordingly, patentee has **one month or thirty (30) days**, whichever is longer, to file a request for reconsideration of this patent term adjustment calculation. See 35 U.S.C. 154(b)(3)(B)(ii) and 37 CFR 1.322(a)(4). No extensions of time will be granted under 37 CFR 1.136.

Patentee should use document code PET.OP if electronically filing a request for reconsideration of this patent term adjustment calculation. The patentee must also include the information required by 37 CFR 1.705(b)(2) and the fee required by 37 CFR 1.18(e). If patentee does not file a timely request for reconsideration of this patent term adjustment calculation including the information required by 37 CFR 1.705(b)(2) and the fee required by 37 CFR 1.18(e), the USPTO will issue a certificate of correction reflecting the PTA determination noted above.

Patentee should be aware that in order to preserve the right to review in the United States District Court for the District of Columbia of the USPTO patent term adjustment determination, patentee must ensure that he or she also take the steps required under 35 U.S.C. 154(b)(4)(A) in a timely manner. Nothing in the request for recalculation should be construed as providing an alternative time frame for commencing a civil action under 35 U.S.C. 154(b)(4)(A).

Any questions concerning this decision should be directed to the Office of Patent Legal Administration at 571-272-7702.

UNITED STATES PATENT AND TRADEMARK OFFICE

Commissioner for Patents
United States Patent and Trademark Office
P.O. Box 1450
Alexandria, VA 22313-1450
www.uspto.gov

Nancy A. Pappas
Life Sciences, Inc.
2900 72nd Street, North
St. Petersburg FL 33710

COPY MAILED

JUL 30 2007

OFFICE OF PETITIONS

In re Application of :
Simon Srybnik and Louis Srybnik :
Application No. 11/586,362 : DECISION ON PETITION
Filed: October 25, 2006 :
Attorney Docket No. SRY-1 :

This is a decision on the petition styled as a petition under 37 CFR 1.183 (which requires a $400 fee), filed May 16, 2007, to correct the spelling of the name of one of the inventor's surname; namely "Louis Srybnmik" to -- Louis Srybnik -- . The petition is being treated as a request for a corrected Filing Receipt under 37 CFR 1.181, since no petition is required where there is a typographical or transliteration error in the inventor's name. *Note* 605.04(b).

The request is **GRANTED**.

Office records have been corrected to reflect the correct spelling of the above-named inventor. A corrected Filing Receipt, which sets forth the correct spelling of the above-named inventor, was mailed on May 30, 2007.

Any questions concerning this matter may be directed to the undersigned at (571) 272-3218.

The matter is being referred to Publishing Division for further processing in view of the payment of the issue fee on July 24, 2007.

Frances Hicks
Petitions Examiner
Office of Petitions

UNITED STATES PATENT AND TRADEMARK OFFICE

Commissioner for Patents
United States Patent and Trademark Office
P.O. Box 1450
Alexandria, VA 22313-1450
www.uspto.gov

Vic Lin
Myers, Dawes, Andras & Sherman, LLP
Suite 1150
19900 MacArthur Boulevard
Irvine, CA 92612

COPY MAILED

JAN 2 6 2009

OFFICE OF PETITIONS

In re Application of	:	
Jack Nguyen et al.	:	
Application No. 11/586,395	:	DECISION ON PETITION
Filed: October 25, 2006	:	TO WITHDRAW
Attorney Docket No. FMI1.PAU.65	:	FROM RECORD
	:	

This is a decision on the Request to Withdraw as attorney or agent of record under 37 C.F.R. § 1.36(b), filed December 9, 2008.

The request is **APPROVED**.

A grantable request to withdraw as attorney/agent of record must be signed by every attorney/agent seeking to withdraw or contain a clear indication that one attorney is signing on behalf of another/others. A request to withdraw will not be approved unless at least 30 (thirty) days would remain between the date of approval and the later of the expiration date of a time to file a response or the expiration date of the maximum time period which can be extended under 37 C.F.R. § 1.136(a).

The request was signed by Vic Y. Lin on behalf of all attorneys/agents of record. All attorneys/agents of record have been withdrawn.

Applicant is reminded that there is no attorney of record at this time.

The correspondence address has been changed to that of the first signing inventor. The address is copied below.

Telephone inquiries concerning this decision should be directed to Kimberly Inabinet at 571-272-4618.

Kimberly Inabinet
Petitions Examiner
Office of Petitions

cc: Jack Nguyen
15 Calle Pelicano
San Clemente, CA 92673

UNITED STATES PATENT AND TRADEMARK OFFICE

UNITED STATES DEPARTMENT OF COMMERCE
United States Patent and Trademark Office
Address: COMMISSIONER FOR PATENTS
P.O. Box 1450
Alexandria, Virginia 22313-1450
www.uspto.gov

APPLICATION NUMBER	FILING OR 371(C) DATE	FIRST NAMED APPLICANT	ATTY. DOCKET NO./TITLE
11/586,395	10/25/2006	Jack Nguyen	FMI1.PAU.65

CONFIRMATION NO. 9315

POWER OF ATTORNEY NOTICE

Vic Lin
Myers Dawes Andras & Sherman, LLP
Suite 1150
19900 MacArthur Blvd.
Irvine, CA 92612

OC000000034203648

Date Mailed: 01/26/2009

NOTICE REGARDING CHANGE OF POWER OF ATTORNEY

This is in response to the Power of Attorney filed 12/09/2008.

- The withdrawal as attorney in this application has been accepted. Future correspondence will be mailed to the new address of record. 37 CFR 1.33.

/kainabinet/

Office of Data Management, Application Assistance Unit (571) 272-4000, or (571) 272-4200, or 1-888-786-0101

UNITED STATES PATENT AND TRADEMARK OFFICE

Commissioner for Patents
United States Patent and Trademark Office
P.O. Box 1450
Alexandria, VA 22313-1450
www.uspto.gov

EXXONMOBIL RESEARCH AND ENGINEERING COMPANY
P.O. BOX 900
ANNANDALE NJ 08801-0900

COPY MAILED

DEC 1 4 2009

OFFICE OF PETITIONS

In re Application of	:	
Soled et al.	:	
Application No. 11/586,399	:	DECISION ON PETITION
Filed: October 25, 2006	:	
Attorney Docket No. AMM-0605	:	

This is a decision on the petition under the unintentional provisions of 37 CFR 1.137(b), filed October 19, 2009, to revive the above-identified application.

The petition is **GRANTED**.

This application became abandoned for failure to timely pay the issue and publication fees on or before October 13, 2009, as required by the Notice of Allowance and Fee(s) Due mailed July 13, 2009. Accordingly, the date of abandonment of this application is October 14, 2009. A Notice of Abandonment was mailed October 26, 2009.

The petition satisfies the requirements of 37 CFR 1.137(b) in that petitioner has supplied (1) the reply in the form of payment of the issue fee of $1,510.00 and publication fee of $300.00; (2) the petition fee of $1,620.00; and (3) a proper statement of unintentional delay.

It is not apparent whether the person signing the instant petition was ever given a power of attorney or authorization of agent to prosecute this patent. In accordance with 37 CFR 1.34(a), the signature appearing on the petition shall constitute a representation to the United States Patent and Trademark Office that he/she is authorized to represent the particular party in whose behalf he/she acts. Additionally, the petitioner has signed the petition but has not set forth a USPTO registration number. Petitioner should note that all documents submitted before the United States Patent and Trademark Office by a registered patent attorney/agent must contain his/her registration number. However, since the accompanying Part B document does include the signature and registration number for David M. Weisberg the petition is accepted as being properly signed.

Telephone inquiries concerning this decision should be directed to the undersigned at (571) 272-7751.

This application is being referred to the Office of Data Management for processing into a patent.

Joan Olszewski
Petitions Examiner
Office of Petitions

UNITED STATES PATENT AND TRADEMARK OFFICE

Commissioner for Patents
United States Patent and Trademark Office
P.O. Box 1450
Alexandria, VA 22313-1450
www.uspto.gov

MAYER & WILLIAMS PC
251 NORTH AVENUE WEST
2ND FLOOR
WESTFIELD NJ 07090

COPY MAILED

AUG 0 1 2008

OFFICE OF PETITIONS

In re Application of	:	
Andy Heath	:	
Application No. 11/586,419	:	ON PETITION
Filed: October 25, 2006	:	
Attorney Docket No. 7003/59	:	

This is a decision on the petition under 37 CFR 1.137(b), filed July 10, 2008, to revive the above-identified application.

The petition is **GRANTED**.

The application became abandoned on January 7, 2007, for failure to respond to the Notice to File Missing Parts of Non-provisional Application mailed November 6, 2006.

The petition satisfies the requirements of 37 CFR 1.137(b) in that petitioner has supplied (1) the reply in the form of payment of the filing fee, search fee, examination fee and surcharges, a declaration, and an English translation of the specification; (2) the petition fee of $770.00 will be charged to deposit account 50-1047, and (3) an adequate statement of unintentional delay.

Telephone inquiries concerning this decision should be directed to the undersigned at (571) 272-3222.

The application file is being directed to the Office of Patent Application Processing further processing.

Kenya A. McLaughlin
Petitions Attorney
Office of Petitions

UNITED STATES PATENT AND TRADEMARK OFFICE

Commissioner for Patents
United States Patent and Trademark Office
P.O. Box 1450
Alexandria, VA 22313-1450
www.uspto.gov

Date : September 1, 2009

Patent No. :7547468
Inventor(s) :Junji Miyashita
Issued :June 16, 2009
Title :OPTICAL FILM AND LIGHTING DEVICE USING THE OPTICAL FILM

Re: Request for Certificate of Correction

Consideration has been given your request for the issuance of a certificate of correction for the above-identified patent under the provisions of 37 CFR 1.322 and/or 1.323.

Assignees' names and addresses (assignment data) printed in a patent are based *solely* on information supplied in the appropriate space for identifying the assignment data, i.e., item 3 of the Fee(s) Transmittal Form PTOL-85B. After payment of the issue fee, correction of assignment data submitted on the PTOL-85B can only be done by Certificate of Correction under 37 CFR 1.323, with a request under 37 CFR 3.81(b).

A request for a patent to be corrected to state the name of the assignee must:

A. state that the assignment was submitted for recordation as set forth in 37 CFR 3.11 before issuance of the patent;

B. include a request for a certificate of correction under 37 CFR 1.323 along with the fee set forth in 37 CFR 1.20(a); and

C. include the processing fee set forth in 37 CFR 1.17(i).

If the request is granted, Certificates of Correction Branch will be notified that a Certificate of Correction may be issued.

See Manual of Patent Examining Procedure, Section 1481.01 (Rev. 3) (Oct. 2005).

Applicant has not included items A and or C above, accordingly, the request for Certificate of Correction to add or change the assignee data is dismissed.

Any request under 37 CFR 3.81(b) should be directed to the following address or facsimile number:

By mail: Mail Stop PETITIONS
Commissioner for Patents
Post Office Box 1450
Alexandria, VA 22313-1450

By hand: Customer Service Window
Randolph Building
401 Dulany Street
Alexandria, VA 22314

By fax: 571-273-8300
ATTN: Office of Petitions

EFS web uspto.gov/ebc/index.html
(must be registered as an e-filer to submit responses)
Technical Support 1-866-217-9197

Any inquiry concerning this communication should be directed to Ms. A. Green at (703) 756-1541.

A Green

Mary Diggs, Supervisor
Decisions & Certificates
of Correction Branch
(703) 756-1580 or (703) 756-1541

Scott A. Timmerman
Brinks, Hofer, Gilson & Lione
P.O. Box 10395
Chicago, Ill 60610

/arg

UNITED STATES PATENT AND TRADEMARK OFFICE

COMMISSIONER FOR PATENTS
UNITED STATES PATENT AND TRADEMARK OFFICE
P.O. BOX 1450
ALEXANDRIA, VA 22313-1450
www.uspto.gov

COPY MAILED

JUL 20 2007

OFFICE OF PETITIONS

ROBERT POPA, ESQ.
C/O LADAS & PARRY
SUITE 2100
5670 WILSHIRE BOULEVARD
LOS ANGELES, CA 90036-5679

In re Application of :
Roland Heumesser :
Application No. 11/586,430 : DECISION DISMISSING
Filed: October 25, 2006 : PETITION
Attorney Docket No. 6157 623804-1 :

This is a decision on the petition filed November 20, 2006, requesting that the above-identified application be accorded a filing date of October 24, 2006, rather than the presently accorded date of October 25, 2006. The petition is properly being treated under 37 CFR 1.10(d).

Petitioner requests the earlier filing date on the basis that the application was purportedly deposited in Express Mail service with the U. S. Postal Service (USPS) on October 24, 2006, pursuant to the requirements of 37 CFR 1.10. The petition is accompanied by (1) a copy of the Express Mail envelope No. EV889699415US, (2) a copy of the post card receipt therefor dated "102506," and (3) a verified statement signed by Lianne M. Doan stating that she mailed the application pursuant to 37 CFR 1.10 on October 24, 2006. It is noted that the copy of the Express Mail envelope for Express Mail No. EV889699415US does not show a "date-in," in fact, the fields usually completed by an USPS representative is completely blank.

Paragraph (d) of 37 CFR 1.10 states that:

> Any person filing correspondence under this section that was received by the Office and delivered by the "Express Mail Post Office to Addressee" service of the USPS, who can show that the "date-in" on the "Express Mail" mailing label or other official notation entered by the USPS was incorrectly entered or omitted by the USPS, may petition the Director to accord the correspondence a filing date as of the date the correspondence is shown to have been deposited with the USPS, provided that:
>
> (1) The petition is filed promptly after the person becomes aware that the Office has accorded, or will accord, a

filing date based upon an incorrect entry by the USPS;

(2) The number of the "Express Mail" mailing label was placed on the paper(s) or fee(s) that constitute the correspondence prior to the original mailing by "Express Mail"; and

(3) The petition includes a showing which establishes, to the satisfaction of the Director, that the requested filing date was the date the correspondence was deposited in "Express Mail Post Office to Addressee" service prior to the last scheduled pickup for that day. Any showing pursuant to this paragraph must be corroborated by evidence from the USPS or that came into being after deposit and within one business day of the deposit of the correspondence in the "Express Mail Post Office to Addressee" service of the USPS.

Petitioner has shown that the instant petition was filed promptly within the meaning of § 1.10(d)(1). There is no dispute that the number of the "Express Mail" mailing label, EV889699415US, was placed on the papers that constitute the correspondence prior to the original mailing by "Express Mail," in compliance with § 1.10(d)(2). The papers presently accorded a filing date of October 25, 2006 bear that "Express Mail" number. However, petitioner has failed to make a showing "which establishes, to the satisfaction of the Director, that the requested filing date was the date the correspondence was deposited in the "Express Mail Post Office to Addressee" service prior to the last scheduled pickup for that day," as required under 37 CFR §1.10(d)(3).

The statements of Attorney Robert Popa and Lianne M. Doan merely reflect an intention by the respective preparers and drafters that the application be placed in Express Mail service on October 24, 2006. This evidence does not overcome the other evidence, including the USPTO date-stamp of October 25, 2006 on the postcard, which supports a conclusion that any Express Mail mailing label accompanying the application bore a date-in of October 25, 2006.

Further, there is no corroborating evidence from the USPS or evidence that came into being after deposit to establish the actual date of deposit in the "Express Mail Post Office to Addressee" service prior to the last scheduled pickup for that day.

In view of the above, the petition is **DISMISSED**.

Any request for reconsideration of this decision should be filed within **TWO MONTHS** of the date of this decision in order to be considered timely (see 37 CFR 1.181(f)). No extensions of time pursuant to the provisions of 37 CFR 1.136 are permitted. If reconsideration is not requested within the time period specified

above, this application will be referred to Office of Initial Patent Examination with the presently accorded filing date of October 25, 2006.

Further correspondence with respect to this matter should be addressed as follows:

By mail: Mail Stop PETITION
Commissioner for Patents
Post Office Box 1450
Alexandria, VA 22313-1450

By hand: U.S. Patent and Trademark Office
Customer Service Window, Mail Stop PETITION
Randolph Building
401 Dulany Street
Alexandria, VA 22314

The centralized facsimile number is **(571) 273-8300.**

Any questions concerning this matter may be directed to the undersigned at (571) 272-3204.

Sherry D. Brinkley
Petitions Examiner
Office of Petitions

UNITED STATES PATENT AND TRADEMARK OFFICE

Commissioner for Patents
United States Patent and Trademark Office
P.O. Box 1450
Alexandria, VA 22313-1450
www.uspto.gov

DREIER LLP
499 PARK AVE
NEW YORK NY 10022

COPY MAILED

JUL 13 2007

OFFICE OF PETITIONS

In re Application of	:	
Norton, et al.	:	
Application No. 11/586,434	:	
Filing Date: October 25, 2006	:	DECISION REFUSING
Attorney Docket No. 600189.466	:	STATUS UNDER § 1.47(a)

This is a decision in response to the petition under 37 CFR 1.47(a), filed June 13, 2007.

The petition under 37 CFR 1.47(a) is **DISMISSED**.

Rule 47 applicant is given TWO MONTHS from the mailing date of this decision to reply, correcting the below-noted deficiencies. Any reply should be entitled "Request for Reconsideration of Petition Under 37 CFR 1.47(a)," and should only address the deficiencies noted below, except that the reply may include an oath or declaration executed by the non-signing inventors. **Failure to respond will result in abandonment of the application.** Any extensions of time will be governed by 37 CFR 1.136(a).

A grantable petition under 37 CFR 1.47(a) requires: (1) proof that the non-signing inventor(s) cannot be reached or refuses to sign the oath or declaration after having been presented with the application papers (specification, claims and drawings); (2) an acceptable oath or declaration in compliance with 37 CFR 1.63; (3) the petition fee; and (4) a statement of the last known address of the non-signing inventor(s). The instant petition does not satisfy requirement (2).

As to requirement (2), petitioner has failed to submit an oath or declaration in compliance with 37 CFR 1.63. The declaration is not acceptable because it contains a non-initialed, non-dated alteration to the citizenship of inventor Hansson.[1] Regarding this, the Manual of Patent Examining Procedure states that it is "improper for anyone, including counsel, to alter, rewrite, or partly fill in any part of the application, including the oath or declaration, after execution of the oath or declaration by the applicant." Furthermore, the Office "will not consider whether noninitialed and/or nondated alterations were made before or after signing of the oath or declaration but will require a new oath or declaration."[2]

On renewed petition, applicants must submit a declaration in compliance with 37 CFR 1.63.

Applicant submitted $130 for the petition fee. However, a petition under 37 CFR 1.47 requires a fee of $200. As petitioner included an authorization to charge any additional fees to his deposit account, Deposit Account No. 50-4026 has been charged $200.

Further correspondence with respect to this matter should be addressed as follows:

By mail: Mail Stop Petitions
Commissioner for Patents
P.O. Box 1450
Alexandria VA 22313-1450

By FAX: (571)273-8300
Attn: Office of Petitions

---

[1] "Any interlineation, erasure, cancellation or other alteration of the application papers...should be dated and initialed or signed by the applicant on the same sheet of paper." 37 CFR 1.52(c)(1).

[2] MPEP 605.04(a).

Telephone inquiries concerning this decision may be directed to the undersigned at (571)272-3207.

Cliff Congo
Petitions Attorney
Office of Petitions

UNITED STATES PATENT AND TRADEMARK OFFICE

Commissioner for Patents
United States Patent and Trademark Office
P.O. Box 1450
Alexandria, VA 22313-1450
www.uspto.gov

DREIER LLP
499 PARK AVE
NEW YORK NY 10022

COPY MAILED

SEP 12 2007

OFFICE OF PETITIONS

In re Application of	:	
Norton, et al.	:	
Application No. 11/586,434	:	
Filing Date: October 25, 2006	:	DECISION ACCORDING
Attorney Docket No. 600189.466	:	STATUS UNDER § 1.47(a)

This is a decision in response to the renewed petition under 37 CFR 1.47(a), filed August 20, 2007.

The petition under 37 CFR 1.47(a) is **GRANTED**.

Applicants filed a petition under 37 CFR 1.47(a) on June 13, 2007. However, the petition was dismissed in a decision mailed on July 13, 2007. The petition was dismissed because the contained a non-initialed, non-dated alteration to the citizenship of inventor Xu.[1]

With the instant petition, Rule 47 applicant has submitted a newly executed declaration from Xu. The other requirements for a grantable petition under 37 CFR 1.47(a) were previously met with the petition filed on June 13, 2007. Accordingly, the above identified application is hereby accorded Rule 1.47(a) status. As provided in 37 CFR 1.47(c), this Office will forward notice of this application's filing to non-signing inventor Tam at the last known address provided in the petition. Notice of the filing of this application will also be published in the Official Gazette.

---

[1] "Any interlineation, erasure, cancellation or other alteration of the application papers...should be dated and initialed or signed by the applicant on the same sheet of paper." 37 CFR 1.52(c)(1).

The matter is being forwarded to the Office of Initial Patent Examination for pre-examination processing.

Telephone inquiries concerning this decision may be directed to the undersigned at (571)272-3207.

Cliff Congo
Petitions Attorney
Office of Petitions

UNITED STATES PATENT AND TRADEMARK OFFICE

Commissioner for Patents
United States Patent and Trademark Office
P.O. Box 1450
Alexandria, VA 22313-1450
www.uspto.gov

CHUNG-MAN TAM
15 SAN ANTONIO PLACE #102
SAN FRANCISCO CA 94133

COPY MAILED

SEP 1 2 2007

OFFICE OF PETITIONS

LETTER

In re Application of :
Norton, et al. :
Application No. 11/586,434 :
Filed: October 25, 2006 :
Title: Systems and Methods for :
Subscribing to Updates of User :
Assigned Keywords :

Dear Mr. Tam:

You are named as a joint inventor in the above-identified United States patent reissue application filed under the provisions of 35 USC 116 (United States Code) and 37 CFR 1.47(a), Rules of Practice in Patent Cases. Should a patent be granted on the application you will be designated therein as a joint inventor.

As a joint inventor, you are entitled to inspect any paper in the file wrapper of the application, order copies of all or any part thereof (at a prepaid cost per 37 CFR 1.19) or make your position of record in the application. Alternatively, you may arrange to do any of the preceding through a registered patent attorney or agent presenting written authorization from you. If you care to join the application, agent of record would presumably assist you. Joining in the application would entail the filing of an appropriate oath or declaration by you pursuant to 37 CFR 1.63.

Telephone inquiries regarding this communication should be directed to Petitions Attorney Cliff Congo at (571)272-3207. Requests for information regarding your application should be directed to the File Information Unit at (703) 308-2733. Information regarding how to pay for and order a copy of the application, or a specific paper in the application, should be directed to the Certification Division at (703) 308-9726 or 1-800-972-6382 (outside the Washington D.C. area).

Cliff Congo
Petitions Attorney
Office of Petitions

UNITED STATES PATENT AND TRADEMARK OFFICE

COMMISSIONER FOR PATENTS
UNITED STATES PATENT AND TRADEMARK OFFICE
P.O. BOX 1450
ALEXANDRIA, VA 22313-1450
www.uspto.gov

JAMES W. MILLER, ATTORNEY
527 MARQUETTE AVENUE
SUITE 1960, RAND TOWER
MINNEAPOLIS MN 55402

COPY MAILED

SEP 1 0 2008

OFFICE OF PETITIONS

In re Application of
LOXTERKAMP et al.
Application No. 11/586,440
Filed: 10/25/2006
Attorney Docket No. 26.2.D89/USA

DECISION ON PETITION

This is a decision on the petition under 37 CFR 1.181 (no fee) filed August 13, 2008, to withdraw the holding of abandonment in the above-identified application.

On January 8, 2008, the Office mailed a nonfinal Office action, which set a three-month shortened statutory period for reply. In the apparent absence of a timely filed response, the Office mailed a Notice of Abandonment on July 31, 2008.

A review of the record reveals that petitioner filed a timely reply to the nonfinal Office action on May 8, 2008; however, petitioner placed an incorrect application number (11/686,440) on the reply. The reply in the form of an amendment and a request for an extension of time for response within the first month were located in the file of Application No. 11/686,440, and were transferred to the correct application, No. 11/586,440. Therefore, the USPTO received the reply and the request for an extension of time for response within the first month on May 8, 2008, but they were not timely matched with the file due to the incorrect application number.

Under current Office procedure, if a paper having an incorrect application number contains sufficient information to identify the correct application and was timely received at the Office, the holding of abandonment will be withdrawn. In reviewing the papers, it is concluded that there was sufficient information thereon to associate the papers with the present application file.

For the reasons stated above, the petition is **granted**. The holding of abandonment is hereby withdrawn and the application is restored to pending status.

The matter is being referred to Technology Center Art Unit 3671 for appropriate action on the reply filed May 8, 2008.

Telephone inquiries specific to this decision should be directed to the undersigned at (571) 272-3211. All other questions regarding the status of the application or the examination process should be directed to the Technology Center.

Christina Tartera Donnell

Christina Tartera Donnell
Senior Petitions Attorney
Office of Petitions