1 8 SEP 2008

United States Patent and Trademark Office

Commissioner for Patents
United States Patent and Trademark Office
P.O. Box 1450
Alexandria, VA 22313-1450
www.uspto.gov

WENDEROTH, LIND & PONACK, L.L.P.
2033 K STREET N. W.
SUITE 800
WASHINGTON DC 20006-1021

In re Application of	:	
Olsen et al.	:	
Application No.: 11/795,946	:	
PCT No.: PCT/NO2005/000477	:	
Int. Filing Date: 22 December 2005	:	DECISION
Priority Date: 28 January 2005	:	
Attorney Docket No.: 2007_1212A	:	
For: Device For Transporting Structures On Water	:	

This is in response to the submission under 37 CFR 1.497(d) filed on 24 October 2007.

BACKGROUND

This international application was filed on 22 December 2005, claimed an earlier priority date of 28 January 2005, and designated the U.S. The International Bureau transmitted a copy of the published international application to the USPTO on 03 August 2006. The 30 month time period for paying the basic national fee in the United States expired at midnight on 28 July 2007. Applicant filed *inter alia* the basic national fee on 25 July 2007.

DISCUSSION

Inspection of the declaration filed on 24 October 2007 reveals that it nominates Tor Ole Olsen, Kolbjorn Hoyland, Arnstein Godejord and Ronald Seim, who are not named in the published international application. A declaration filed under 37 CFR 1.497 (d) must be by the actual inventor or inventors as required under 37 CFR 1.63 or as permitted by 37 CFR 1.42, 1.43 or 1.47. The declaration must be accompanied by (1) a statement from each person being added as an inventor and from each person being deleted as an inventor that the error in inventorship occurred without deceptive intention on his or her part, (2) the processing fee set forth in 37 CFR 1.17; and (3) if an assignment has been executed by any of the original named inventors, the written consent of the assignee (*See* 37 CFR 3.73(b)).

Regarding requirement (1), applicants have provided a "Statement Re Inventorship" in which Messrs. Hoyland, Olsen, Godejord and Seim assert that "they are inventors of the invention contained in the above-identified application and any error in inventorship in the international application occurred without deceptive intent on their part." This satisfies requirement (1).

Regarding requirement (2), the required processing fee has been paid.

Regarding requirement (3), it appears from inspection of the published international application that MPU ENTERPRISE AS may enjoy an assignment interest in this application, but no assignee consent to the proposed change in inventorship has been provided. Clarification is required.

It is noted that the declaration is defective because it appears to have been compiled by aggregating separately signed sheets to arrive at the document submitted; it appears that complete copies of the declaration documents as signed by the inventors have not been submitted. See MPEP 201.03.

DECISION

The declaration is **NOT ACCEPTED** under 37 CFR 1.497(d), without prejudice.

If reconsideration on the merits of this matter is desired, a proper response must be filed within **TWO (2) MONTHS** from the mail date of this decision. Extensions of time are available under 37 CFR 1.136(a). Failure to timely reply will result in **ABANDONMENT** of this application. No additional processing fee is required.

Please direct any further correspondence with respect to this matter to the Assistant Commissioner for Patents, Mail Stop PCT, P.O. Box 1450, Alexandria, VA 22313-1450, and address the contents of the letter to the attention of the Office of PCT Legal Administration.

/George Dombroske/
George Dombroske
PCT Legal Examiner
Office of PCT Legal Administration
Tel: (571) 272-3283
Fax: (571) 273-0459

11 JAN 2010

United States Patent and Trademark Office

Commissioner for Patents
United States Patent and Trademark Office
P.O. Box 1450
Alexandria, VA 22313-1450
www.uspto.gov

WENDEROTH, LIND & PONACK, L.L.P.
2033 K STREET N. W.
SUITE 800
WASHINGTON DC 20006-1021

In re Application of	:	
Olsen et al.	:	
Application No.: 11/795,946	:	
PCT No.: PCT/NO2005/000477	:	
Int. Filing Date: 22 December 2005	:	DECISION
Priority Date: 28 January 2005	:	
Attorney Docket No.: 2007_1212A	:	
For: Device For Transporting Structures On Water	:	

This is in response to the renewed submission under 37 CFR 1.497(d) filed on 10 November 2008.

DISCUSSION

In a Decision mailed on 18 September 2008, the declaration filed on 24 October 2007 was not accepted under 37 CFR 1.497(d), without prejudice, because

> Regarding requirement (3), it appears from inspection of the published international application that MPU ENTERPRISE AS may enjoy an assignment interest in this application, but no assignee consent to the proposed change in inventorship has been provided. Clarification is required.
>
> It is noted that the declaration is defective because it appears to have been compiled by aggregating separately signed sheets to arrive at the document submitted; it appears that complete copies of the declaration documents as signed by the inventors have not been submitted. See MPEP 201.03.

In response, counsel has provided a "Consent of Assignee..." signed by Olav Weider in the capacity of Managing Director, who asserts that he "is empowered to act on behalf of the actual assignee," identifies MPU Enterprise AS as the assignee, identifies the reel and frame numbers where an assignment was recorded in the USPTO, and expresses consent to the change in inventorship. This satisfies requirement (3).

With respect to the declaration, counsel has submitted declaration documents which are acceptable for purposes of 37 CFR 1.497(a) and (b).

DECISION

The declaration is **ACCEPTED** under 37 CFR 1.497(d).

This application is being returned to the Office of Patent Application Processing. Its date under 35 U.S.C. 371(c)(1), (2) and (4) is **10 November 2008**.

/George Dombroske/
George Dombroske
PCT Legal Examiner
Office of PCT Legal Administration
Tel: (571) 272-3283

UNITED STATES PATENT AND TRADEMARK OFFICE

Commissioner for Patents
United States Patent and Trademark Office
P.O. Box 1450
Alexandria, VA 22313-1450
www.uspto.gov
DIW Apr-10

YOUNG & THOMPSON
209 MADISON STREET
SUITE 500
ALEXANDRIA VA 22314

MAILED

APR 15 2010

OFFICE OF PETITIONS

In re Application of Iguchi et al. Application Number: 11/795979 Filing Date: 07/25/2007 Attorney Docket Number: 8006-1035	: : : : : :	ON PETITION

This is a decision on the petition under 37 CFR 1.137(b) filed on February 5, 2010.

The petition is **GRANTED**.

This application became abandoned on October 9, 2009, for failure to timely submit a reply to the non-final Office action mailed on July 8, 2009, which set a three (3)-month shortened statutory period for reply. No extensions of the time for reply in accordance with 37 CFR 1.136(a) were obtained. Notice of Abandonment was mailed on January 21, 2010.

Receipt of the amendment filed on February 5, 2010, is acknowledged.

The application is referred to Technology Center Art Unit 2156 for further processing.

Telephone inquiries concerning this matter may be directed to the undersigned at (571) 272-3231.

DWood

Douglas I. Wood
Senior Petitions Attorney
Office of Petitions

17 OCT 2007

UNITED STATES PATENT AND TRADEMARK OFFICE

Commissioner for Patents
United States Patent and Trademark Office
P.O. Box 1450
Alexandria, VA 22313-1450
www.uspto.gov

NATH & ASSOCIATES
112 South West Street
Alexandria, VA 22314

In re Application of	:	
PAVLOV, Nikolai et al.	:	
Application No.: 11/795,980	:	DECISION
PCT No.: PCT/IL2006/000099	:	
Int. Filing Date: 25 January 2006	:	ON PETITION UNDER
Priority Date: 26 January 2005	:	
Docket No.: 28419U	:	37 CFR 1.47(a)
For: VIDEO-RATE HOLOGRAPHIC	:	
SURVEILLANCE SYSTEM	:	

This is a decision on applicants' Petition Under 37 CFR 1.47(a), filed in the United States Patent and Trademark Office (USPTO) on 25 July 2007.

BACKGROUND

On 25 January 2006, applicants filed international application no. PCT/IL2006/000099, claiming a priority date of 26 January 2005. A copy of the international application was transmitted to the Office by the International Bureau on 03 August 2006. The deadline for payment of the basic national fee in the United States was 26 July 2007.

On 25 July 2007, applicants filed a transmittal letter for entry into the national phase in the United States, accompanied by the basic national fee, a declaration of the inventors and a petition under 37 CFR 1.47(a).

DISCUSSION

A petition under 37 CFR 1.47 must be accompanied by: (1) the fee under 37 CFR 1.17(h), (2) proof of pertinent facts, namely that the inventor refuses to sign after being presented with the application papers or cannot be reached after diligent effort, (3) a statement of the last known address of the inventor, and (4) an oath or declaration by the 37 CFR 1.47(a) applicant on behalf of himself or herself and the nonsigning applicant.

Items (1), (3) and (4) have been met. (1) The petition fee of $200 has been paid. (3) The petition lists the last known addresses of non-signing inventor Nikolai Pavlov as RID Ltd., Tomsk, Russia; 634934 Studencheskaya st. 10b-1. (4) The declaration complies with 37 CFR 1.497(a)-(b) and 1.47(a).

Item (2) has not been satisfied. The petition must supply proof that applicant refused to sign after being presented with the application papers (specification, including claims, drawings, and oath or declaration). MPEP §409.03(d). It appears that Mr. Pavlov was sent a copy of the declaration and assignment. Copies of documentary evidence supporting the presentation of Mr. Pavlov with a complete copy of the application papers, including the declaration, should be submitted.

The statement from Bjørn Magne Sundal does not indicate that the inventor was presented with a complete copy of the application papers and then failed to return them. Additionally, numerous documents are referenced as attachments in the statement and many are listed in the transmittal letter, but those documents are not present in the application file.

CONCLUSION

For the above reasons, applicants' petition under 37 CFR 1.47(a) is **DISMISSED** without prejudice.

If reconsideration on the merits of this petition is desired, a proper response must be filed within TWO (2) MONTHS from the mail date of this decision. Failure to timely file the proper response will result in abandonment of this application. Extensions of time under 37 CFR 1.136(a) are available. Any reconsideration request should include a cover letter entitled "Renewed Petition Under 37 CFR 1.47(a)." No additional petition fee is required.

Any further correspondence with respect to this matter should be addressed to the Mail Stop PCT, Commissioner for Patents, Office of PCT Legal Administration, P.O. Box 1450, Alexandria, Virginia 22313-1450, with the contents of the letter marked to the attention of the Office of PCT Legal Administration.

Erin P. Thomson

Erin P. Thomson
Attorney Advisor
PCT Legal Administration

Telephone: 571-272-3292
Facsimile: 571-273-0459

2 2 APR 2008

UNITED STATES PATENT AND TRADEMARK OFFICE

Commissioner for Patents
United States Patent and Trademark Office
P.O. Box 1450
Alexandria, VA 22313-1450
www.uspto.gov

NATH & ASSOCIATES
112 South West Street
Alexandria, VA 22314

In re Application of	:	
PAVLOV, Nikolai et al.	:	
Application No.: 11/795,980	:	DECISION
PCT No.: PCT/IL2006/000099	:	
Int. Filing Date: 25 January 2006	:	ON PETITION UNDER
Priority Date: 26 January 2005	:	
Docket No.: 28419U	:	37 CFR 1.47(a)
For: VIDEO-RATE HOLOGRAPHIC	:	
SURVEILLANCE SYSTEM	:	

This is a decision on applicants' Petition Under 37 CFR 1.47(a), filed in the United States Patent and Trademark Office (USPTO) on 15 February 2008.

BACKGROUND

On 17 October 2007, the Office mailed Decision On Petition Under 37 CFR 1.47(a), dismissing applicants' petition without prejudice.

On 15 February 2008, applicants filed a renewed petition, accompanied by the fee for a two month extension of time.

DISCUSSION

A petition under 37 CFR 1.47 must be accompanied by: (1) the fee under 37 CFR 1.17(h), (2) proof of pertinent facts, namely that the inventor refuses to sign after being presented with the application papers or cannot be reached after diligent effort, (3) a statement of the last known address of the inventor, and (4) an oath or declaration by the 37 CFR 1.47(a) applicant on behalf of himself or herself and the nonsigning applicant.

Items (1), (3) and (4) were previously satisfied. The petition now lists the last known addresses of non-signing inventor Nikolai Pavlov as d.2 "G" nv.5; St. Ordzhenikidze; 410015 SARATOV; Russia.

Item (2) has been satisfied. The petition supplies proof that applicant refused to sign after being presented with the application papers.

CONCLUSION

For the above reasons, applicants' petition under 37 CFR 1.47(a) is **GRANTED**.

As provided in 37 CFR 1.47(a), a notice of the filing of this application will be forwarded to the nonsigning inventor at his last known address of record.

A notice of the filing of the application under 37 CFR 1.47(a) will be published in the Official Gazette.

This application is being forwarded to the National Stage Processing Branch of the Office of PCT Operations to continue national stage processing of the application, including accordation of a 35 U.S.C. §371(c)(1), (c)(2) and (c)(4) date of **25 July 2007**.

/Erin P. Thomson/

Erin P. Thomson
Attorney Advisor
PCT Legal Administration

Telephone: 571-272-3292
Facsimile: 571-273-0459

2 2 APR 2008

UNITED STATES PATENT AND TRADEMARK OFFICE

Commissioner for Patents
United States Patent and Trademark Office
P.O. Box 1450
Alexandria, VA 22313-1450
www.uspto.gov

Nikolai Pavlov
d.2 "G" nv.5
St. Ordzhenikidze
410015 SARATOV
Russia

In re Application of
PAVLOV, Nikolai et al.
Application No.: 11/795,980
PCT No.: PCT/IL2006/000099
Int. Filing Date: 25 January 2006
Priority Date: 26 January 2005
Docket No.: 28419U
For: VIDEO-RATE HOLOGRAPHIC SURVEILLANCE SYSTEM

Dear Mr. Pavlov:

You are named as an inventor in the above-captioned United States national stage application, filed under the provisions of 37 CFR 1.47(a) and 35 U.S.C. 116. Should a patent be granted, you will be designated as an inventor.

As a named inventor, you are entitled to inspect any paper in the file wrapper of the application, order copies of all or any part thereof (at a prepaid cost per 37 CFR 1.19) or to make your position of record in the application. Alternatively, you may arrange to do any of the preceding through a registered patent agent or attorney presenting written authorization from you. The counsel for the applicant is listed below. Joining in the application would entail the filing of an appropriate oath or declaration by you pursuant to 37 CFR 1.63.

/Erin P. Thomson/

Erin P. Thomson
Attorney Advisor
PCT Legal Administration

Telephone: 571-272-3292
Facsimile: 571-273-0459

NATH & ASSOCIATES
112 South West Street
Alexandria, VA 22314

UNITED STATES PATENT AND TRADEMARK OFFICE

Commissioner for Patents
United States Patent and Trademark Office
P.O. Box 1450
Alexandria, VA 22313-1450
www.uspto.gov

31 AUG 2007

28997
HARNESS, DICKEY & PIERCE, PLC
7700 Bonhomme, Ste. 400
St. Louis, MO 63105

In re Application of
KIM *et al*
U.S. Application No.: 11/795,995
PCT No.: PCT/KR2005/003319
Int. Filing Date: 06 October 2005
Priority Date: 06 October 2004
Attorney Docket No.: 15207-4/US/NP
For: III-NITRIDE SEMICONDUCTOR LIGHT EMITTING DEVICE AND METHOD FOR MANUFACTURING THE SAME

DECISION ON PETITION FOR REVIVAL UNDER 37 CFR 1.137(b)

This is a decision on the petition filed with the national stage papers on 24 July 2007 which is treated under 37 CFR 1.137(b) and is **DISMISSED** without prejudice.

Applicants submitted a USPTO form PTO/SB/64/PCT (05-07) whose title was modified to indicate that the petition was filed under 37 CFR 1.137(a), instead of 37 CFR 1.137(b). **Alterations of USPTO forms are not permitted!**

Regardless, this petition is treated under 37 CFR 1.137(b).

Applicants included a $750.00 petition fee which is the appropriate small entity fee for a petition under 37 CFR 1.137(b), not 37 CFR 1.137(a). Moreover, the title page of the petition is for petition to revive an **unintentionally abandoned** application (37 CFR 1.137(b)). In addition, the petition includes a statement that "[t]he entire delay in filing the required reply until the filing of a grantable petition under 37 CFR 1.137(b) was unintentional" as required by 37 CFR 1.137(b)(3). A telephone call to counsel on 30 August 2007 verified that the petition was intended to be filed under 37 CFR 1.137(b).

A petition to revive pursuant to 37 CFR 1.137(b) requires: (1) a proper reply, (2) the petition fee required by law, (3) a statement that the "entire delay in filing the required reply from the due date for the reply to the filing of a grantable petition pursuant to this paragraph was unintentional," and (4) any terminal disclaimer and fee required pursuant to 37 CFR 1.137(c).

Applicants failed to satisfy item (3).

The required statement of 37 CFR 1.137(b)(3) is provided in the petition. But the person signing the petition has no authority to make this statement. Doo-Jin BAK

signed the petition as CEO, Epivally Co. Ltd. (presumably the assignee). However, applicants failed to include a Statement Under 3.73(b) authorizing Mr. Bak to make the required statement. As such, the statement in the petition is not accepted.

The application remains **ABANDONED**.

If reconsideration on the merits of this petition is desired, a proper response must be filed within **TWO (2) MONTHS** from the mail date of this decision. Extensions of time may be obtained under 37 CFR 1.136(a).

Any further correspondence should be addressed to the Mail Stop PCT, Commissioner for Patents, Office of PCT Legal Administration, P.O. Box 1450, Alexandria, Virginia 22313-1450, with the contents of the letter marked to the attention of the Office of PCT Legal Administration.

James Thomson

James Thomson
Attorney Advisor
Office of PCT Legal Administration

Tel.: (571) 272-3302

UNITED STATES PATENT AND TRADEMARK OFFICE

Commissioner for Patents
United States Patent and Trademark Office
P.O. Box 1450
Alexandria, VA 22313-1450
www.uspto.gov

11 DEC 2007

28997
HARNESS, DICKEY & PIERCE, PLC
7700 Bonhomme, Ste. 400
St. Louis, MO 63105

In re Application of
KIM *et al*
U.S. Application No.: 11/795,995
PCT No.: PCT/KR2005/003319
Int. Filing Date: 06 October 2005
Priority Date: 06 October 2004
Attorney Docket No.: 15207-4/US/NP
For: III-NITRIDE SEMICONDUCTOR LIGHT EMITTING DEVICE AND METHOD FOR MANUFACTURING THE SAME

DECISION ON RENEWED PETITION FOR REVIVAL UNDER 37 CFR 1.137(b)

This is a decision on the response filed 31 October 2007 which is treated as a renewed petition under 37 CFR 1.137(b) and is hereby **DISMISSED** without prejudice.

In the initial petition under 37 CFR 1.137(b), applicants failed to satisfy item (3) as there was no evidence that the person signing the petition had any authority to make the delay statement.

In the renewed petition, applicants submitted a "Statement Under 3.73(b)" signed by Doo-Jin Bak, CEO, Epivalley Co. Ltd. Applicants also provided a copy of an assignment naming Epivalley Co. Ltd. as the assignee and the three inventors listed as assignors.

However, counsel failed to include a statement that the assignment was, or concurrently is being submitted for recordation, or a statement specifying where the assignment is recorded in the Office. *See* 37 CFR 3.73.[1]

For this reason, item (3) of 37 CFR 1.137(b) is not yet complete.

---

[1] 37 CFR 3.73 (b)(1) In order to . . . take action in a patent . . . matter, the assignee must establish its ownership of the patent . . . Ownership is established by submitting a signed statement identifying the assignee, accompanied by either:

(i) . . . For patent matters only, the submission of the documentary evidence must be accompanied by a statement affirming that the documentary evidence of the chain of title from the original owner to the assignee was or concurrently is being submitted for recordation pursuant to § 3.11; or

(ii) A statement specifying where documentary evidence of a chain of title from the original owner to the assignee is recorded in the assignment records of the Office (*e.g.*, reel and frame number).

11/795,995

Any further correspondence should be addressed to the Mail Stop PCT, Commissioner for Patents, Office of PCT Legal Administration, P.O. Box 1450, Alexandria, Virginia 22313-1450, with the contents of the letter marked to the attention of the Office of PCT Legal Administration.

James Thomson

James Thomson
Attorney Advisor
Office of PCT Legal Administration

Tel.: (571) 272-3302

17 DEC 2007

UNITED STATES PATENT AND TRADEMARK OFFICE

Commissioner for Patents
United States Patent and Trademark Office
P.O. Box 1450
Alexandria, VA 22313-1450
www.uspto.gov

28997
HARNESS, DICKEY & PIERCE, PLC
7700 Bonhomme, Ste. 400
St. Louis, MO 63105

In re Application of :
KIM *et al* :
U.S. Application No.: 11/795,995 :
PCT No.: PCT/KR2005/003319 :
Int. Filing Date: 06 October 2005 :
Priority Date: 06 October 2004 :
Attorney Docket No.: 15207-4/US/NP :
For: III-NITRIDE SEMICONDUCTOR LIGHT :
EMITTING DEVICE AND METHOD :
FOR MANUFACTURING THE SAME :

DECISION ON RENEWED PETITION FOR REVIVAL UNDER 37 CFR 1.137(b)

This is a decision on the response filed 13 December 2007 which is treated as a renewed petition under 37 CFR 1.137(b) and is **GRANTED** as follows.

In the prior renewed petition, applicants failed to satisfy item (3) of 37 CFR 1.137(b). Counsel did not include a statement attesting that the assignment was, or concurrently is being submitted for recordation, or specifying where the assignment is recorded in the Office. This information is required by 37 CFR 3.73(b).

In the papers filed 13 December 2007, applicants state that "such assignment was filed December 13, 2007, and recorded at Reel 020238, Frame 0802." This statement meets the requirements of 37 CFR 3.73(b)(ii). As such, item (3) of 37 CFR 1.137(b) is complete. Accordingly, all requirements under 37 CFR 1.137(b) are now satisfied.

This application is being forwarded to the Office of Patent Application Processing for further processing.

James Thomson

James Thomson
Attorney Advisor
Office of PCT Legal Administration

Tel.: (571) 272-3302

UNITED STATES PATENT AND TRADEMARK OFFICE

Commissioner for Patents
United States Patent and Trademark Office
P.O. Box 1450
Alexandria, VA 22313-1450
www.uspto.gov

STERNE, KESSLER, GOLDSTEIN & FOX P.L.L.C.
1100 NEW YORK AVENUE, N.W.
WASHINGTON, DC 20005

COPY MAILED
JAN 06 2010

In re Application of	:	
Christoph Erdelen, et al.	:	
Application No.: 11/796,029	:	ON PETITION
Filed: April 26, 2007	:	
Attorney Docket No.: 2400.2690005/RWE	:	

This is a decision on the petition, filed January 5, 2010, under 37 CFR 1.313(c)(2) to withdraw the above-identified application from issue after payment of the issue fee.

The petition is **GRANTED**.

The above-identified application is withdrawn from issue for consideration of a submission under 37 CFR 1.114 (request for continued examination). See 37 CFR 1.313(c)(2).

Petitioner is advised that the issue fee paid on December 3, 2009, cannot be refunded. If, however, this application is again allowed, petitioner may request that it be applied towards the issue fee required by the new Notice of Allowance.[1]

Telephone inquiries relating to this decision should be directed to the undersigned at (571) 272-3204.

The application is being referred to Technology Center AU 1615 for further processing of the request for continued examination under 37 CFR 1.114 and for consideration of the concurrently filed Information Disclosure Statement (IDS).

/SDB/

Sherry D. Brinkley
Petitions Examiner
Office of Petitions

---

[1] *The request to apply the issue fee to the new Notice may be satisfied by completing and returning the new Part B – Fee(s) Transmittal Form (along with any balance due at the time of submission). Petitioner is advised that the Issue Fee Transmittal Form must be completed and timely submitted to avoid abandonment of the application.*

UNITED STATES PATENT AND TRADEMARK OFFICE

Commissioner for Patents
United States Patent and Trademark Office
P.O. Box 1450
Alexandria, VA 22313-1450
www.uspto.gov

STINSON MORRISON HECKER LLP
ATTN: PATENT GROUP
1201 WALNUT STREET, SUITE 2800
KANSAS CITY MO 64106-2150

MAILED

AUG 20 2009

OFFICE OF PETITIONS

In re Application of	:	
Michael Stahlman	:	
Application No. 11/796,033	:	DECISION ON PETITION
Filed: April 26, 2007	:	
Attorney Docket No. 824790-0002	:	

This is a decision on the petition to withdraw the holding of abandonment under 37 CFR 1.181, filed July 16, 2009.

The petition is **GRANTED**.

The above-identified application was held abandoned for failure to timely file a response to the non-final Office action mailed December 8, 2008. This Office action set a shortened statutory period for reply of three (3) months. The Office mailed a Notice of Abandonment on June 24, 2009, stating that no reply had been received.

A review of the application file reveals the presence of an Amendment, filed on June 12, 2009, made timely by obtaining a three month extension of time and including a Certificate of Mailing dated June 8, 2009. A review of Office finance records confirms that the Office received the fee for the three month extension of time on that same day. Accordingly, it is obvious that the Notice of Abandonment was mailed in error.

In view thereof, **the holding of abandonment is withdrawn.**

The matter is being forwarded to Group Art Unit 3728 for consideration of the Amendment, timely filed with a three month extension of time on June 12, 2009 (Certificate of Mailing dated June 8, 2009).

Telephone inquiries regarding this decision should be directed to the undersigned at (571)272-3207.

Cliff Congo
Petitions Attorney
Office of Petitions

UNITED STATES PATENT AND TRADEMARK OFFICE

Commissioner for Patents
United States Patent and Trademark Office
P.O. Box 1450
Alexandria, VA 22313-1450
www.uspto.gov

KATHERINE A. JACKSON HUEBSCH
MEDTRONIC, INC.
710 MEDTRONIC PARKWAY
MINNEAPOLIS, MN 55432

COPY MAILED

AUG 1 1 2008

OFFICE OF PETITIONS

In re Application of	:	
KANAYINKAL, et al.	:	
Application No. 11/796,045	:	DECISION ON PETITION
Filed: April 26, 2007	:	TO WITHDRAW
Attorney Docket No. **P0023923.01**	:	FROM RECORD
	:	

This is a decision on the Request to Withdraw as attorney or agent of record under 37 C.F.R. § 1.36(b), filed October 29, 2007.

The request is **DISMISSED** as moot.

A review of the file record indicates that the power of attorney to **KATHERINE A. JACKSON HUEBSCH** of **MEDTRONIC, INC.** has been revoked by the assignee of the patent application on June 13, 2008. Accordingly, the request to withdraw under 37 C.F.R. § 1.36(b) is moot.

All future communications from the Office will continue to be directed to the below-listed address until otherwise notified by applicant.

Telephone inquires concerning this decision should be directed to the undersigned at 571-272-7253.

Monica A. Graves
Petitions Examiner
Office of Petitions

cc: **MINTZ LEVIN COHN FERRIS GLOVSKY & POPEO**
ATTN: PATENT INTAKE CUSTOMER NO. 35437
ONE FINANCIAL CENTER
BOSTON MA 02111

UNITED STATES PATENT AND TRADEMARK OFFICE

Commissioner for Patents
United States Patent and Trademark Office
P.O. Box 1450
Alexandria, VA 22313-1450
www.uspto.gov

Squire, Sanders & Dempsey, LLP
Two Renaissance Square
40 North Central Avenue
Suite 2700
Phoenix, AZ 85004-4498

COPY MAILED

AUG 1 8 2008

In re Application of	:	
Richard W. Barker	:	
Application No. 11/796,093	:	DECISION ON PETITION
Filed: April 25, 2007	:	TO WITHDRAW
Attorney Docket No. 100138.00002	:	FROM RECORD
	:	

This is a decision on the Request to Withdraw as attorney or agent under 37 C.F.R. § 1.36(b) or 37 C.F.R. § 10.40 filed July 29, 2008.

The request is **APPROVED**.

A review of the file record indicates that the firm of Alex D. Starkovich: (1) does not have power of attorney in this patent application; and (2) has been employed or otherwise engaged in the proceedings in this patent application. In view of the present decision, all the attorneys associated with customer number 25901 have been withdrawn from the present application and may not prepare or submit papers under 37 C.F.R. § 1.34, or correspond in any manner in this application unless appointed in an acceptable power of attorney under 37 C.F.R. § 1.32(b).

The correspondence address of record has been changed and the new correspondence address is the address indicated below.

Applicant is reminded that there is no attorney of record at this time.

Telephone inquires concerning this decision should be directed to Kimberly Inabinet at 571-272-4618.

Kimberly Inabinet
Petitions Examiner
Office of Petitions

cc: Richard W. Barker
4138 W. Behrend Drive
Glendale, AZ 85308

UNITED STATES PATENT AND TRADEMARK OFFICE

UNITED STATES DEPARTMENT OF COMMERCE
United States Patent and Trademark Office
Address: COMMISSIONER FOR PATENTS
P.O. Box 1450
Alexandria, Virginia 22313-1450
www.uspto.gov

APPLICATION NUMBER	FILING OR 371(C) DATE	FIRST NAMED APPLICANT	ATTY. DOCKET NO./TITLE
11/796,093	04/25/2007	Richard W. Barker	100138.00002

CONFIRMATION NO. 3043

POWER OF ATTORNEY NOTICE

23619
SQUIRE SANDERS & DEMPSEY LLP
TWO RENAISSANCE SQUARE, 40 NORTH CENTRAL AVENUE
SUITE 2700
PHOENIX, AZ 85004-4498

OC000000031620439

Date Mailed: 08/18/2008

NOTICE REGARDING CHANGE OF POWER OF ATTORNEY

This is in response to the Power of Attorney filed 07/29/2008.

- The withdrawal as attorney in this application has been accepted. Future correspondence will be mailed to the new address of record. 37 CFR 1.33.

/kainabinet/

Office of Data Management, Application Assistance Unit (571) 272-4000, or (571) 272-4200, or 1-888-786-0101

UNITED STATES PATENT AND TRADEMARK OFFICE

Commissioner for Patents
United States Patent and Trademark Office
P.O. Box 1450
Alexandria, VA 22313-1450
www.uspto.gov

31 JUL 2007

BEYER WEAVER LLP
P.O. BOX 70250
OAKLAND, CA 94612-0250

In re Application of	:	
CAI, Kui et al.	:	
Application No.: 11/796,094	:	
PCT No.: PCT/SG04/00357	:	
Int. Filing Date: 26 October 2004	:	DECISION
Priority Date: None	:	
Attorney's Docket No.: LLYDP001/FP3656/SN	:	
For: Method And System For Encoding And Decoding Information With Modulation Constraints And Error Control	:	

This is in response to applicants' "Letter To Withdraw The Missing Requirement Notice," filed 09 July 2007. Applicants' submission has been treated as a petition under 37 CFR 1.181.

BACKGROUND

On 26 October 2004, applicants filed international application PCT/SG04/00357. The thirty-month period for paying the basic national fee in the United States expired at midnight on 26 April 2007.

On 25 April 2007, applicants filed a transmittal letter for entry into the national stage in the United States, which was accompanied, *inter alia*, by the requisite basic national fee.

On 24 May 2007, the Office mailed a first Filing Receipt.

On 25 May 2007, the Office mailed a second Filing Receipt.

On 25 May 2007, the Office mailed a "Notice To File Missing Parts Of Nonprovisional Application," indicating that an oath or declaration, an abstract, and the surcharge for late filing of the oath or declaration were required.

On 09 July 2007, applicants filed the instant "Letter To Withdraw The Missing Requirement Notice," mailed 25 May 2007.

DISCUSSION

A review of the Transmittal Letter, filed on 25 April 2007, clearly indicates that the instant application is the national stage entry for international application PCT/SG04/00357. The transmittal letter also indicates that the fees to be paid are the basic national fee, the examination fee and the search fee, which are fees directly related to a U.S. national stage application. Furthermore, the "Electronic Acknowledgement Receipt," mailed 06 July 2007, clearly indicates that the instant application is the "U.S. National Stage under 35 USC 371."

Hence, it is concluded that applicants filed a U.S. national stage application under 35 U.S.C. 371. As such, the mailing of the two Filings Receipts and the "Notice To File Missing Parts Of Nonprovisional Application" was in error.

A review of the papers shows that a declaration and an abstract were filed on 25 April 2007. As such, the surcharge for late filing of the oath or declaration is not required.

CONCLUSION

The "Notice To File Missing Parts Of Nonprovisional Application" mailed 25 May 2007 is **VACATED**.

The Filing Receipts mailed 24 May 2007 and 25 May 2007 are **VACATED**.

This application is being forwarded to the National Stage Processing Division of the Office of the PCT Operations for processing as a U.S. national stage application under 35 U.S.C. 371.

Any further correspondence with respect to this matter should be addressed to Mail Stop PCT, Commissioner for Patents, Office of PCT Legal Administration, P.O. Box 1450, Alexandria, VA 22313-1450, with the contents of the letter marked to the attention of the PCT Legal Office.

Leonard Smith
PCT Legal Examiner
Office of PCT Legal Administration
Telephone: (571) 272-3297
Facsimile: (571) 273-0459

Stefan Staicovici
PCT Legal Examiner
Office of PCT Legal Administration
Telephone: (571) 272-1208

UNITED STATES PATENT AND TRADEMARK OFFICE

UNITED STATES DEPARTMENT OF COMMERCE
United States Patent and Trademark Office
Address: COMMISSIONER FOR PATENTS
P.O. Box 1450
Alexandria, Virginia 22313-1450
www.uspto.gov

HICKMAN PALERMO TRUONG & BECKER/ORACLE
2055 GATEWAY PLACE
SUITE 550
SAN JOSE, CA 95110-1083

Mail Date: 04/21/2010

Applicant	: Thierry Cruanes	: DECISION ON REQUEST FOR
Patent Number	: 7636731	: RECALCULATION of PATENT
Issue Date	: 12/22/2009	: TERM ADJUSTMENT IN VIEW
Appliction No	: 11/796,102	: OF WYETH AND NOTICE OF INTENT TO
Filed	: 04/25/2007	: ISSUE CERTIFICATE OF CORRECTION
		:

The Request for Recalculation is **GRANTED** to the extent indicated.

The patent term adjustment has been determined to be **250** days. The USPTO will *sua sponte* issue a certificate of correction reflecting the amount of PTA days determined by the recalculation.

Prior to the issuance of the certificate of correction, the USPTO will afford patentee an opportunity to be heard and request reconsideration. Accordingly, patentee has **one month or thirty (30) days**, whichever is longer, to file a request for reconsideration of this patent term adjustment calculation. See 35 U.S.C. 154(b)(3)(B)(ii) and 37 CFR 1.322(a)(4). No extensions of time will be granted under 37 CFR 1.136.

Patentee should use document code PET.OP if electronically filing a request for reconsideration of this patent term adjustment calculation. The patentee must also include the information required by 37 CFR 1.705(b)(2) and the fee required by 37 CFR 1.18(e). If patentee does not file a timely request for reconsideration of this patent term adjustment calculation including the information required by 37 CFR 1.705(b)(2) and the fee required by 37 CFR 1.18(e), the USPTO will issue a certificate of correction reflecting the PTA determination noted above.

Patentee should be aware that in order to preserve the right to review in the United States District Court for the District of Columbia of the USPTO patent term adjustment determination, patentee must ensure that he or she also take the steps required under 35 U.S.C. 154(b)(4)(A) in a timely manner. Nothing in the request for recalculation should be construed as providing an alternative time frame for commencing a civil action under 35 U.S.C. 154(b)(4)(A).

Any questions concerning this decision should be directed to the Office of Patent Legal Administration at 571-272-7702.

UNITED STATES PATENT AND TRADEMARK OFFICE

UNITED STATES DEPARTMENT OF COMMERCE
United States Patent and Trademark Office
Address: COMMISSIONER FOR PATENTS
P.O. Box 1450
Alexandria, Virginia 22313-1450
www.uspto.gov

HICKMAN PALERMO TRUONG & BECKER/ORACLE
2055 GATEWAY PLACE
SUITE 550
SAN JOSE, CA 95110-1083

Mail Date: 05/18/2010

Applicant : Thierry Cruanes
Patent Number : 7636731
Issue Date : 12/22/2009
Application No: 11/796,102
Filed : 04/25/2007

: NOTICE CONCERNING IMPROPER
: CALCULATION OF PATENT TERM
: ADJUSTMENT BASED UPON USPTO
: IMPROPERLY MEASURING REDUCTION
: PERIOD UNDER 37 CFR 1.704(c)(10).

The United States Patent and Trademark Office (USPTO) discovered that in processing the recent recalculation decisions mailed in response to patentee's filed Request for Recalculation of Patent Term Adjustment in view of Wyeth, the USPTO improperly measured the reduction period for reductions under 37 CFR 1.704(c)(10). Pursuant to 37 CFR 1.704(c)(10), patentee's reduction begins on the date of filing the amendment under 37 CFR 1.312 ("1.312 amendment") or other related paper and ends on the date that the Office mails a response to the filing of the 1.312 amendment or other paper. It has been discovered that during the recalculation, the calculation failed to the limit the reduction to the mail date of the response to the 1.312 amendment or other paper. Accordingly, patentee's reductions were greater than warranted.

This notice **VACATES** the previous GRANTED request for recalculation and provides patentee with a revised GRANTED recalculation.

The patent term adjustment has been determined to be **293** days. The USPTO will *sua sponte* issue a certificate of correction reflecting the amount of patent term adjustment (PTA) days determined by the recalculation.

Prior to the issuance of the certificate of correction, the USPTO will afford patentee an opportunity to be heard and request reconsideration. Accordingly, patentee has **one month or thirty (30) days** from the mail date of this notice, whichever is longer, to file a request for reconsideration of this PTA calculation. See 35 U.S.C. § 154(b)(3)(B)(ii) and 37 CFR 1.322(a)(4).

Patentee should use document code PET.OP if electronically filing a request for reconsideration of this PTA calculation. The patentee must also include the information required by 37 CFR 1.705(b)(2), and the fee required by 37 CFR 1.18(e). If patentee does not file a timely request for reconsideration of this PTA calculation, including the information required by 37 CFR 1.705(b)(2) and the fee required by 37 CFR 1.18(e), the USPTO will issue a certificate of correction reflecting the PTA determination noted above.

Patentee should be aware that in order to preserve the right of review of the USPTO's PTA determination in the United States District Court for the District of Columbia, patentee must ensure that the steps required under 35 U.S.C. § 154 (b)(4) are taken in a timely manner. Nothing in the request for recalculation should be construed as providing an alternative time frame for commencing a civil action under 35 U.S.C. § 154(b)(4).

UNITED STATES PATENT AND TRADEMARK OFFICE

UNITED STATES DEPARTMENT OF COMMERCE
United States Patent and Trademark Office
Address: COMMISSIONER FOR PATENTS
P.O. Box 1450
Alexandria, Virginia 22313-1450
www.uspto.gov

APPLICATION NO.	FILING DATE	FIRST NAMED INVENTOR	ATTORNEY DOCKET NO.	CONFIRMATION NO.
11/796,104	04/26/2007	Heikki Johannes Sipila	OXF06016P00230US	1665

32116 7590 02/19/2010
WOOD, PHILLIPS, KATZ, CLARK & MORTIMER
500 W. MADISON STREET
SUITE 3800
CHICAGO, IL 60661

EXAMINER
SWANSON, WALTER H

ART UNIT	PAPER NUMBER
2823	

MAIL DATE	DELIVERY MODE
02/19/2010	PAPER

Please find below and/or attached an Office communication concerning this application or proceeding.

The time period for reply, if any, is set in the attached communication.

UNITED STATES DEPARTMENT OF COMMERCE
U.S. Patent and Trademark Office
Address: COMMISSIONER FOR PATENTS
P.O. Box 1450
Alexandria, Virginia 22313-1450

APPLICATION NO./ CONTROL NO.	FILING DATE	FIRST NAMED INVENTOR / PATENT IN REEXAMINATION	ATTORNEY DOCKET NO.
11796104	4/26/2007	SIPILA ET AL.	OXF06016P00230US

EXAMINER
MATTHEW SMITH

ART UNIT	PAPER
2823	20100212

DATE MAILED:

WOOD, PHILLIPS, KATZ, CLARK & MORTIMER
500 W. MADISON STREET
SUITE 3800
CHICAGO, IL 60661

Please find below and/or attached an Office communication concerning this application or proceeding.

Commissioner for Patents

A Decision on applicant's Petition to Correct Inventorship filed on January 25, 2008 has been granted and a letter indicating as such accompanies this letter.

/Matthew S. Smith/
Supervisory Patent Examiner, Art Unit 2823

Matthew S. Smith
SPE
Art Unit: 2823

UNITED STATES PATENT AND TRADEMARK OFFICE

Commissioner for Patents
United States Patent and Trademark Office
P.O. Box 1450
Alexandria, VA 22313-1450
www.uspto.gov

Paper No.252010

Mark Polyakov
WOOD, PHILLIPS, KATZ, CLARK & MORTIMER
500 West Madison Street, Suite 3800
Chicago, Illinois 60661

Appl No.: 11/796104	:	
Inv.: Sipila et al.	:	**DECISION ON PETITION**
Filed: April 26, 2007	:	**UNDER** *37 CFR 1.48(a)*
For: A Method for Patterning a Detector Crystal and a Semiconductor Detector Having a Patterned Crystal	:	

This is a decision on the applicant's "Petition to Correct And/Or Add to Originally Named Inventors to a Patent" originally filed under 37 CFR 1.48(a) filed January 25, 2008. The applicant requests that Juha Jouni Kalliopuska of be added to the list of inventors as originally filed, namely, Heikki Johannes Sipilä, Seppo Nenonen, and Hans Andersson.

After a careful review of the file and applicant having supplied all of the information and requirements of 37 CFR 1.48(a), the petition is hereby **granted**.

The application will be forwarded to the Office of Initial Patent Examination (OIPE) for issuance of a corrected filing receipt, and correction of Office records to reflect the inventorship as corrected.

MATTHEW SMITH
SUPERVISORY PATENT EXAMINER
TECHNOLOGY CENTER 2800

UNITED STATES PATENT AND TRADEMARK OFFICE

UNITED STATES DEPARTMENT OF COMMERCE
United States Patent and Trademark Office
Address: COMMISSIONER FOR PATENTS
P.O. Box 1450
Alexandria, Virginia 22313-1450
www.uspto.gov

HICKMAN PALERMO TRUONG & BECKER/ORACLE
2055 GATEWAY PLACE
SUITE 550
SAN JOSE, CA 95110-1083

Mail Date: 04/21/2010

Applicant	: Thierry Cruanes	: DECISION ON REQUEST FOR
Patent Number	: 7603339	: RECALCULATION of PATENT
Issue Date	: 10/13/2009	: TERM ADJUSTMENT IN VIEW
Appliction No	: 11/796,110	: OF WYETH AND NOTICE OF INTENT TO
Filed	: 04/25/2007	: ISSUE CERTIFICATE OF CORRECTION
		:

The Request for Recalculation is **GRANTED** to the extent indicated.

The patent term adjustment has been determined to be **338** days. The USPTO will *sua sponte* issue a certificate of correction reflecting the amount of PTA days determined by the recalculation.

Prior to the issuance of the certificate of correction, the USPTO will afford patentee an opportunity to be heard and request reconsideration. Accordingly, patentee has **one month or thirty (30) days**, whichever is longer, to file a request for reconsideration of this patent term adjustment calculation. See 35 U.S.C. 154(b)(3)(B)(ii) and 37 CFR 1.322(a)(4). No extensions of time will be granted under 37 CFR 1.136.

Patentee should use document code PET.OP if electronically filing a request for reconsideration of this patent term adjustment calculation. The patentee must also include the information required by 37 CFR 1.705(b)(2) and the fee required by 37 CFR 1.18(e). If patentee does not file a timely request for reconsideration of this patent term adjustment calculation including the information required by 37 CFR 1.705(b)(2) and the fee required by 37 CFR 1.18(e), the USPTO will issue a certificate of correction reflecting the PTA determination noted above.

Patentee should be aware that in order to preserve the right to review in the United States District Court for the District of Columbia of the USPTO patent term adjustment determination, patentee must ensure that he or she also take the steps required under 35 U.S.C. 154(b)(4)(A) in a timely manner. Nothing in the request for recalculation should be construed as providing an alternative time frame for commencing a civil action under 35 U.S.C. 154(b)(4)(A).

Any questions concerning this decision should be directed to the Office of Patent Legal Administration at 571-272-7702.

UNITED STATES PATENT AND TRADEMARK OFFICE

Commissioner for Patents
United States Patent and Trademark Office
P.O. Box 1450
Alexandria, VA 22313-1450
www.uspto.gov

WEINGARTEN, SCHURGIN, GAGNEBIN & LEBOVICI, LLP
TEN POST OFFICE SQUARE
BOSTON MA 02109

COPY MAILED

JUN 29 2007

OFFICE OF PETITIONS

In re Application of	:	
Gilbert D. Beinhocker	:	
Application No. 11/796,130	:	DECISION ON PETITION
Filed: April 26, 2007	:	TO MAKE SPECIAL UNDER
Attorney Docket No. BEIN-002XX	:	37 CFR 1.102(c)(1)
	:	

This is a decision on the petition under 37 CFR 1.102(c)(1), filed June 5, 2007, to make the above-identified application special based on applicant's age as set forth in M.P.E.P. § 708.02, Section IV.

The petition is **GRANTED**.

A grantable petition to make an application special under 37 CFR 1.102(c)(1) and MPEP § 708.02, Section IV: Applicant's Age must be accompanied by evidence showing that at least one of the applicants is 65 years of age, or more, such as a birth certificate or a statement by applicant. No fee is required

The instant petition includes a copy of applicant's birth certificate. Accordingly, the above-identified application has been accorded "special" status.

Telephone inquiries concerning this decision should be directed to undersigned at 571-272-1642.

All other inquiries concerning either the examination or status of the application should be directed to the Technology Center.

This application is being referred to the Office of Initial Patent Examination to await a reply to the Notice to File Corrected Application Papers (Notice) mailed May 21, 2007. This application will be accorded "special" status when pre-examination processing is done.

April M. Wise
Petitions Examiner
Office of Petitions

UNITED STATES PATENT AND TRADEMARK OFFICE

Commissioner for Patents
United States Patent and Trademark Office
P.O. Box 1450
Alexandria, VA 22313-1450
www.uspto.gov

SLATER & MATSIL, L.L.P.
17950 PRESTON ROAD, SUITE 1000
DALLAS, TX 75252

COPY MAILED

OCT 12 2007

OFFICE OF PETITIONS

In re Application of :
Chang, et al. :
Application No. 11/796,164 :
Filed: April 27, 2007 :
Attorney Docket No. TSM05-0367 :

ON PETITION

This is a decision on the petition filed under 37 CFR 1.10(d) to accord the application a filing date of April 27, 2007.

The petition is **granted**.

The record reflects that the subject application arrived at the Patent and Trademark Office in an Express Mail envelope with Express Mail label EV27616705US showing a date-in of April 26, 2007. Petitioner filed the instant petition on September 27, 2007, asserting that the application should have been accorded a filing date of April 27, 2007, as that was date the application was deposited with the Express Mail service.

Title 37, Section 1.10(d) of the Code of Federal Regulations reads, in pertinent part:

> Any person filing correspondence under this section that was received by the Office and delivered by the Express Mail Post Office to Addressee service of the USPS who can show that the date-in on the Express Mail mailing label or other official notation entered by the USPS was incorrectly entered or omitted by the USPS, may petition the Commissioner to accord the correspondence a filing date as of the date the correspondence is shown to have been deposited with the USPS, provided that:
>
> (1) The petition is filed promptly after the person becomes aware that the Office has accorded or will accord, a filing date based upon an incorrect entry by USPS;
>
> (2) The number of the Express Mail mailing label was placed on the paper(s) or fee(s) that constitute the correspondence prior to the original mailing by Express Mail; and
>
> (3) The petition includes a showing which establishes, to the satisfaction of the Commissioner, that the requested filing date was the date the correspondence was deposited in the AExpress Mail Post Office to Addressee@ service prior to the last scheduled pickup for that day. Any showing pursuant to this paragraph must be corroborated by evidence from the USPS or that came into being after deposit within one business day of the deposit of the correspondence in the AExpress Mail Post Office to Addressee@ service of the USPS.

All of the above requirements have been met. The application will, therefore, be accorded a filing date of April 27, 2007.

The application file is being forwarded to the Office of Patent Application Processing where the application will be accorded a filing date of April 27, 2007, and a corrected filing receipt generated.

Telephone injuries concerning this decision should be directed to the undersigned at (571) 272-3222.

Kenya A. McLaughlin
Petitions Attorney
Office of Petitions

UNITED STATES PATENT AND TRADEMARK OFFICE

Commissioner for Patents
United States Patent and Trademark Office
P.O. Box 1450
Alexandria, VA 22313-1450
www.uspto.gov

MAILED

APR 26 2010

OFFICE OF PETITIONS

RENE YIN
2886 GAINSBOROUGH DRIVE
SAN MARINO, CA 91108

In re Application of:	:	
Rene YIN	:	
Application No. 11/796,176	:	DECISION ON PETITION
Filed: April 28, 2007	:	
Attorney Docket No. Yin2	:	

This is a decision on the petition under 37 CFR 1.137(b), filed February 19, 2010, to revive the above-identified application.

The petition is DISMISSED

The application became abandoned for failure to reply in a timely manner to the final Office action mailed March 5, 2009, which set a shortened statutory period for reply of three (3) months. No extensions of time under the provisions of 37 CFR 1.136(a) were obtained. Accordingly, the application became abandoned on June 6, 2009.

A grantable petition under 37 CFR 1.137(b) must be accompanied by: (1) the required reply, unless previously filed; (2) the petition fee as set forth in 37 CFR 1.17(m); (3) a statement that the entire delay in filing the required reply from the due date for the reply until the filing of a grantable petition pursuant to 37 CFR 1.137(b) was unintentional; and (4) any terminal disclaimer (and fee as set forth in 37 CFR 1.20(d)) required by 37 CFR 1.137(d). Where there is a question as to whether either the abandonment or the delay in filing a petition under 37 CFR 1.137 was unintentional, the Commissioner may require additional information. See MPEP 711.03(c)(III)(C) and (D). The instant petition lacks item(s) (3). The petition is not properly signed in that the signature block above petitioner's printed name has not been filled out. Accordingly, the petition is not being further treated at this time.

An extension of time under 37 CFR 1.136 must be filed prior to the expiration of the maximum extendable period for reply. See In re Application of S., 8 USPQ2d 1630, 1631 (Comm'r Pats. 1988). Since the $245.00 extension of time fee submitted with the petition on February 19, 2010 was subsequent to the maximum extendable period for reply, this fee is unnecessary and will be refunded by Treasury Check in due course.

Telephone inquiries concerning this decision should be directed to Shahid Alam at (571) 272-6052 or in his absence to the undersigned at (571) 272-7099.

David A. Bucci
Petitions Examiner
Office of Petitions

UNITED STATES PATENT AND TRADEMARK OFFICE

Commissioner for Patents
United States Patent and Trademark Office
P.O. Box 1450
Alexandria, VA 22313-1450
www.uspto.gov

MORRISON & FOERSTER LLP
425 MARKET STREET
SAN DIEGO, CA 92130-2040

COPY MAILED

NOV 0 4 2009

OFFICE OF PETITIONS

In re Application of	:	
Peter Jonathon Legg	:	
Application No. 11/796,181	:	DECISION ON PETITION
Filed: April 27, 2007	:	TO WITHDRAW
Attorney Docket No. **562492008400**	:	FROM RECORD
	:	

This is a decision on the Request to Withdraw as attorney or agent of record under 37 CFR § 1.36(b), filed September 10, 2009.

The request is **NOT APPROVED**.

A grantable request to withdraw as attorney/agent of record must be signed by every attorney/agent seeking to withdraw or contain a clear indication that one attorney is signing on behalf of another/others.

The request cannot be approved because the address for neither the first named inventor nor the assignee of record was not provided in the request. The Office will only accept changes to the most current address information provided for the assignee of the entire interest that properly became of record under 37 CFR 3.71 or, the most current address of the first named inventor. The assignee must establish its ownership of the patent to the satisfaction of the Director. In this regard, a Statement under 37 CFR 3.73(b) must have either: (i) documentary evidence of a chain of title from the original owner to the assignee (*e.g.*, copy of an executed assignment), and a statement affirming that the documentary evidence of the chain of title from the original owner to the assignee was or concurrently is being submitted for recordation pursuant to § 3.11; or (ii) a statement specifying where documentary evidence of a chain of title from the original owner to the assignee is recorded in the assignment records of the Office (*e.g.*, reel and frame number).

All future communications from the Office will continue to be directed to the above-listed address until otherwise notified by applicant.

Telephone inquiries concerning this decision should be directed to JoAnne Burke at 571-272-4584.

JoAnne Burke
Petitions Examiner
Office of Petitions

UNITED STATES PATENT AND TRADEMARK OFFICE

Commissioner for Patents
United States Patent and Trademark Office
P.O. Box 1450
Alexandria, VA 22313-1450
www.uspto.gov

SLATER & MATSIL, L.L.P.
17950 PRESTON ROAD, SUITE 1000
DALLAS, TX 75252

COPY MAILED

APR 17 2008

OFFICE OF PETITIONS

In re Application of Chan et al. :
Application No. 11/796,201 :
Filing Date: April 27, 2007 :
Attorney Docket No. TSM06-0473 :

Decision on Petition

This is a decision on the petition filed October 1, 2007, under 37 CFR 1.10(d) to accord the above-identified application a filing date of April 27, 2007, instead of April 26, 2007.

The petition is **granted**.

Petitioner asserts the "date-in" on the "Express Mail" mailing label was incorrectly entered.

37 CFR 1.10(d)(3) states,

> The petition [must include] a showing which establishes, to the satisfaction of the Commissioner, that the requested filing date was the date the correspondence was deposited in the "Express Mail Post Office to Addressee" service prior to the last scheduled pickup for that day. Any showing pursuant to this paragraph must be corroborated by evidence from the USPS or that came into being after deposit and within one business day of the deposit of the correspondence in the "Express Mail Post Office to Addressee" service of the USPS.

A review of the Express Mail mailing label indicates the label includes a date-stamp indicating the application was mailed April 27, 2007. The date-stamp on the Express Mail mailing label, in conjunction with the petition, is sufficient to prove the application was mailed April 27, 2007.

Petitioner has satisfied the requirements of 37 CFR 1.10(d) and the application has been accorded a filing date of April 27, 2007.

Telephone inquiries regarding this communication should be directed to Petitions Attorney Steven Brantley at (571) 272-3203.

Charles Steven Brantley
Senior Petitions Attorney
Office of Petitions

UNITED STATES PATENT AND TRADEMARK OFFICE

Commissioner for Patents
United States Patent and Trademark Office
P.O. Box 1450
Alexandria, VA 22313-1450
www.uspto.gov

SLATER & MATSIL, L.L.P.
17950 PRESTON ROAD, SUITE 1000
DALLAS TX 75252

COPY MAILED

NOV 26 2007

OFFICE OF PETITIONS

In re Application of	:	
Lee, et al.	:	
Application No. 11/796,202	:	DECISION GRANTING
Filed: April 26, 2007	:	PETITION
Attorney Docket No. TSM06-0752	:	

This is a decision on the petition filed October 26, 2007, requesting that the above-identified application be accorded a filing date of April 27, 2007, rather than the presently accorded date of April 26, 2007. The petition is properly treated as a petition under 37 CFR 1.10(d).

Petitioner requests the earlier filing date on the basis that the application was purportedly deposited with Express Mail Service on April 27, 2007 pursuant to 37 CFR 1.10. While the copy of the Express Mail label receipt No. EV978583326US bears a handwritten "date-in" of "4 26 07," it also includes a USPS receipt date stamp of "APR 26 2007." Petitioner is alleging that the date of mailing shown in the "date-in" is a U. S. Postal Service (USPS) error and the correct date of mailing pursuant to 37 CFR 1.10 is April 27, 2007. The same Express Mail label number also appears on the original Utility Patent Application Transmittal of record in the application file.

The evidence presented is convincing that the Express Mail package was entrusted to the USPS on April 27, 2007, as shown by the USPS stamped receipt date. Accordingly, this application is entitled to a filing date of April 27, 2007, and has been so accorded.

In view of the above, the petition is **GRANTED**.

This application file is being referred to the Office of Initial Patent Examination (OIPE) for **correction of the filing date to April 27, 2007 and for issuance of a corrected filing receipt**.

Telephone inquiries relating to this decision should be directed to the undersigned at (571) 272-3230. Telephone inquiries related to OIPE processing should be directed to their hotline at (571) 272-4100.

Shirene Willis Brantley

Shirene Willis Brantley
Senior Petitions Attorney
Office of Petitions

UNITED STATES PATENT AND TRADEMARK OFFICE

UNITED STATES DEPARTMENT OF COMMERCE
United States Patent and Trademark Office
Address: COMMISSIONER FOR PATENTS
P.O. Box 1450
Alexandria, Virginia 22313-1450
www.uspto.gov

APPLICATION NO.	FILING DATE	FIRST NAMED INVENTOR	ATTORNEY DOCKET NO.	CONFIRMATION NO.
11/796,205	04/27/2007	Murti V. Salapaka	505400	2894

53609 7590 09/09/2008
REINHART BOERNER VAN DEUREN P.C.
2215 PERRYGREEN WAY
ROCKFORD, IL 61107

EXAMINER
WACHSMAN, HAL D

ART UNIT	PAPER NUMBER
2857	

NOTIFICATION DATE	DELIVERY MODE
09/09/2008	ELECTRONIC

Please find below and/or attached an Office communication concerning this application or proceeding.

The time period for reply, if any, is set in the attached communication.

Notice of the Office communication was sent electronically on above-indicated "Notification Date" to the following e-mail address(es):

RockMail@reinhartlaw.com

UNITED STATES PATENT AND TRADEMARK OFFICE

Commissioner for Patents
United States Patent and Trademark Office
P.O. Box 1450
Alexandria, VA 22313-1450
www.uspto.gov

In re Application of SALAPAKA et al.
Appl. No.: 11/796205
Filed: April 27, 2007
For: OBSERVER BASED Q-CONTROL IMAGING METHODS FOR ATOMIC FORCE MICROSCOPY

DECISION ON PETITION
37 CFR 1.84(a)(2)

This decision is in response to the petition filed April 27, 2007 in the above-identified application. Petitioner request that color drawings be accepted in accordance with 37 C.F.R. 1.84 (a)(2).

The petition states that Figures 11a, 11b, 11c, 12a, 12b, 12c, 12d, 19, 20a, 20b, 20c, 20d, 21a, 21b, 21c, 21d, 22a, 22b and 22c are color drawings, necessary for the understanding of the invention because black and white drawings do not show the samples clearly enough to show the reader of the application how the invention provides quality images of samples. The petition complies with 37 C.F.R. 1.84 (a)(2) in that it was accompanied by (1) the appropriate fee and (2) at least three sets of color drawings. The original specification, filed on April 27, 2007 also contains the statement required as set forth in 37 C.F.R. 1.84 (a)(2) (iii).

Having met all requirements set forth in 37 C.F.R. 1.84 (a)(2), the petition is granted.

SUMMARY: The petition is **granted**. The application has been forwarded to the examiner in charge thereof for further action.

Eliseo Ramos-Feliciano
Supervisory Patent Examiner
Art Unit 2857
Patent Examining Technology Center 2800

REINHART BOERNER VAN DEUREN P.C.
2215 PERRYGREEN WAY
ROCKFORD IL 61107

UNITED STATES PATENT AND TRADEMARK OFFICE

UNITED STATES DEPARTMENT OF COMMERCE
United States Patent and Trademark Office
Address: COMMISSIONER FOR PATENTS
P.O. Box 1450
Alexandria, Virginia 22313-1450
www.uspto.gov

REINHART BOERNER VAN DEUREN P.C.
2215 PERRYGREEN WAY
ROCKFORD, IL 61107

Mail Date: 04/20/2010

Applicant	: Murti V. Salapaka	: DECISION ON REQUEST FOR
Patent Number	: 7627438	: RECALCULATION of PATENT
Issue Date	: 12/01/2009	: TERM ADJUSTMENT IN VIEW
Appliction No	: 11/796,205	: OF WYETH AND NOTICE OF INTENT TO
Filed	: 04/27/2007	: ISSUE CERTIFICATE OF CORRECTION
		:

The Request for Recalculation is **GRANTED** to the extent indicated.

The patent term adjustment has been determined to be **83** days. The USPTO will *sua sponte* issue a certificate of correction reflecting the amount of PTA days determined by the recalculation.

Prior to the issuance of the certificate of correction, the USPTO will afford patentee an opportunity to be heard and request reconsideration. Accordingly, patentee has **one month or thirty (30) days**, whichever is longer, to file a request for reconsideration of this patent term adjustment calculation. See 35 U.S.C. 154(b)(3)(B)(ii) and 37 CFR 1.322(a)(4). No extensions of time will be granted under 37 CFR 1.136.

Patentee should use document code PET.OP if electronically filing a request for reconsideration of this patent term adjustment calculation. The patentee must also include the information required by 37 CFR 1.705(b)(2) and the fee required by 37 CFR 1.18(e). If patentee does not file a timely request for reconsideration of this patent term adjustment calculation including the information required by 37 CFR 1.705(b)(2) and the fee required by 37 CFR 1.18(e), the USPTO will issue a certificate of correction reflecting the PTA determination noted above.

Patentee should be aware that in order to preserve the right to review in the United States District Court for the District of Columbia of the USPTO patent term adjustment determination, patentee must ensure that he or she also take the steps required under 35 U.S.C. 154(b)(4)(A) in a timely manner. Nothing in the request for recalculation should be construed as providing an alternative time frame for commencing a civil action under 35 U.S.C. 154(b)(4)(A).

Any questions concerning this decision should be directed to the Office of Patent Legal Administration at 571-272-7702.

UNITED STATES PATENT AND TRADEMARK OFFICE

Commissioner for Patents
United States Patent and Trademark Office
P.O. Box 1450
Alexandria, VA 22313-1450
www.uspto.gov

COPY MAILED
JUN 03 2008

SLATER & MATSIL, L.L.P.
17950 PRESTON ROAD, SUITE 1000
DALLAS TX 75252

In re Application of	:	
Lee, et al.	:	
Application No. 11/796,206	:	DECISION
Filed/Deposited: 26 April, 2007	:	
Attorney Docket No. TSM06-0621		

This is a decision on the petition filed on 1 October, 2007, requesting that the above-identified application be accorded a filing date of 27 April, 2007, rather than the presently accorded date of 26 April, 2007. The petition is properly treated as a petition under 37 C.F.R. §1.10(c).

The Office regrets the delay in addressing this matter, however, the instant petition was presented to the attorneys in the Office of Petitions only at this writing.

The petition is **GRANTED**.

The application transmittal bears the U.S. Postal Service (U.S.P.S.) Express Mail Label Receipt No. EV727616665US.

Petitioner requests the filing date on the basis that the application was purportedly deposited with U.S.P.S. Express Mail Service on 27 April, 2007, pursuant to 37 C.F.R. §1.10. While the copy of the U.S.P.S. Express Mail Label Receipt No. EV727616665US bears a handwritten "date-in" of "4/26/07," it also includes a USPS receipt date stamp—though partially obscured—that appears to be of "APR 27 2007." Petitioner is alleging that the date of mailing shown in the "date-in" is a USPS error and the correct date of mailing pursuant to 37 C.F.R. §1.10 is 27 April, 2007.

The Office considers the date the paper or fee is shown to have been deposited as "Express Mail" to be the "date-in" on the Express Mail label, MPEP §513. However, in view of the conflicting

dates on the label, although Petitioner failed to do so and present the results to the Office with the instant petition, the Office of Petitioner made a search of the USPS' Express Mail Track & Confirm database and received the following information from that source regarding the package bearing Express Mail Label Receipt No. EV727616665US: Acceptance DALLAS TX 75248 04/27/07 5:41pm." (Emphasis supplied.)

The petition is **granted**. The petition fee is waived and no fee appears to have been charged—should Petitioner later discover that a fee was charged, Petitioner should request a refund from the Office of Finance and submit a copy of this decision with that request.

The instant file is released to the Office of Patent Application Processing (OPAP) (formerly the Office of Initial Patent Examination (OIPE)) to correct the filing date so as to accord to the instant application a filing date of 27 April, 2007, and to mail to Petitioner a corrected filing receipt reflecting a filing date of 27 April, 2007.

Telephone inquiries related to OPAP processing should be directed to their hotline at (571) 272-4100.

While telephone inquiries regarding this decision may be directed to the undersigned at (571) 272-3214, it is noted that all practice before the Office is in writing (see: 37 C.F.R. §1.2[1]) and the proper authority for action on any matter in this regard are the statutes (35 U.S.C.), regulations (37 C.F.R.) and the commentary on policy (MPEP). Therefore, no telephone discussion may be controlling or considered authority for Petitioner's action(s).

John J. Gillon, Jr.
Senior Attorney
Office of Petitions

---

[1] The regulations at 37 C.F.R. §1.2 provide:
§1.2 Business to be transacted in writing.
All business with the Patent and Trademark Office should be transacted in writing. The personal attendance of applicants or their attorneys or agents at the Patent and Trademark Office is unnecessary. The action of the Patent and Trademark Office will be based exclusively on the written record in the Office. No attention will be paid to any alleged oral promise, stipulation, or understanding in relation to which there is disagreement or doubt.

Gillon, John

From: U.S._Postal_Service_ [U.S._Postal_Service@usps.com]
Sent: Wednesday, May 28, 2008 4:31 AM
To: Gillon, John
Subject: U.S. Postal Service Track & Confirm email Restoration - EV72 7616 665U S

This is a post-only message. Please do not respond.

John Gillon has requested that you receive this restoration information for Track & Confirm as listed below.

Current Track & Confirm e-mail information provided by the U.S. Postal Service.

Label Number: EV72 7616 665U S

Service Type: Express Mail - Post Office to Addressee

Shipment Activity	Location	Date & Time
Delivered	ALEXANDRIA VA 22313	04/30/07 6:30am
Arrival at Pick-Up-Point	ALEXANDRIA VA 22313	04/28/07 9:22am
Arrival at		
Arrival at Unit	DULLES VA 20102	04/28/07 8:06am
Processed	DALLAS TX 75261	04/27/07 8:29pm
Processed	DALLAS TX 75248	04/27/07 5:51pm
Acceptance	DALLAS TX 75248	04/27/07 5:41pm

USPS has not verified the validity of any email addresses submitted via its online Track & Confirm tool.

For more information, or if you have additional questions on Track & Confirm services and features, please visit the Frequently Asked Questions (FAQs) section of our Track & Confirm site at http://www.usps.com/shipping/trackandconfirmfaqs.htm

UNITED STATES PATENT AND TRADEMARK OFFICE

Commissioner for Patents
United States Patent and Trademark Office
P.O. Box 1450
Alexandria, VA 22313-1450
www.uspto.gov

COPY MAILED

SEP 06 2007

OFFICE OF PETITIONS

Mr. Christopher John Rourk
Jackson Walker LLP
901 Main Street, Suite 6000
DALLAS TX 75202

In re Application of
William Karau
Application No. 11/796,250
Deposited: April 27, 2007
Attorney Docket No.: 130797.00001
Title of Invention: Barbecue Firebox and Method of Operation

ON PETITION

This is a decision on the Petition for Filing Date filed June 21, 2007, requesting that the above-identified application be accorded the filing date of April 27, 2007.

Application papers in the above-identified application were deposited on April 27, 2007. However, on June 5, 2007, the Office of Initial Patent Examination mailed a "Notice of Incomplete Nonprovisional Application", notifying applicant that the application papers had not been accorded a filing date because the application was deposited without drawings.[1]

In response, 5 sheets of drawings and the present petition were filed on June 21, 2007. The petition contends that the application as filed included 5 sheets of drawings and were described in the original filed specification. In support, the petition is accompanied by a copy of applicants' postcard receipt which acknowledges receipt in the office of "Formal Drawings 5 pg(s)" on April 27, 2007.

Applicants' postcard receipt is prima facie[2] evidence that drawings were received on April 27, 2007, but no drawings are present in the file. Hence, it is clear that the papers for this

---

[1] See 35 U.S.C. 111(a)(4)

[2] A postcard receipt which itemizes and properly identifies the items which are being filed serves as prima facie evidence of receipt in the office of all items listed thereon. See MPEP 503.

application were mishandled by the Office. Therefore, it is concluded that 5 sheets of drawings were received on April 27, 2007, as shown in counsel's file, and later misplaced in the Office.

The petition is Granted. A petition fee has not been charged.

Since the original drawings cannot be located in the Office, the copy of the drawings supplied on June 21, 2007, will be used for processing and examination purposes.

The application will be returned to the Office of Initial Patent Examination for further processing with a **filing date of April 27, 2007**, using the 5 sheets of drawings supplied on June 21, 2007.

Telephone inquiries related to this decision may be directed to the undersigned at (571) 272-3215.

Charlema R. Grant

Charlema R. Grant
Petitions Attorney
Office of Petitions

UNITED STATES PATENT AND TRADEMARK OFFICE

Commissioner for Patents
United States Patent and Trademark Office
P.O. Box 1450
Alexandria, VA 22313-1450
www.uspto.gov

MORRISON & FOERSTER LLP
755 PAGE MILL RD
PALO ALTO, CA 94304-1018

MAILED

JUN 07 2010

OFFICE OF PETITIONS

In re Application of	:	
Lie Yang, et. al.	:	
Application No. 11/796,258	:	DECISION ON PETITION
Filed: April 27, 2007	:	TO WITHDRAW FROM
Attorney Docket No. 085804-710500	:	RECORD

This is a decision on the request to withdraw as attorney or agent of record under 37 CFR §§ 1.36(b), or 10.40 filed March 24, 2010.

The request is **NOT APPROVED**.

A review of the file record indicates that the power of attorney to Robert A. Saltzberg and all the attorneys/agents associated with Customer Number 25226 have been revoked by the assignee of the above application on April 19, 2010. Accordingly, the request to withdraw under 37 CFR §§ 1.36(b) or 10.40 is moot.

All future communications from the Office will be directed to the new correspondence address of record until otherwise notified by applicant.

Telephone inquires concerning this decision should be directed to the undersigned at (571) 272-3226.

Andrea Smith
Petitions Examiner
Office of Petitions

UNITED STATES PATENT AND TRADEMARK OFFICE

Commissioner for Patents
United States Patent and Trademark Office
P.O. Box 1450
Alexandria, VA 22313-1450
www.uspto.gov

APPLICATION NUMBER	FILING/RECEIPT DATE	FIRST NAMED APPLICANT	ATTORNEY DOCKET NUMBER
11/796262	04/27/07	Usui	SONYJP 3.3-1037 DIV

530
Lerner, David, Littenberg,
Krumholz & Mentlik
600 South Avenue West
Westfield, NJ 07090

DATE MAILED: October 16, 2007

DECISION GRANTING PETITION UNDER 37 CFR 1.138
The declaration of express abandonment is recognized

This is in response to the petition under 37 CFR 1.138(d) filed on April 27, 2007 requesting for a refund any previously paid search fee and excess claims fee in the above-identified application, and the petition under 37 CFR 1.138(c) filed on April 16, 2007, for express abandonment to avoid publication of the above-identified application.

The petitions are granted.

The express abandonment is recognized. Any previously paid search fee and excess claims fee are hereby refunded. The application has been withdrawn from publication. A notice of abandonment will be mailed in due course.

Any inquiries concerning this decision should be directed to the Pre-Grant Publication Division at (703) 605-4283.

571-272-4200

Pre-Grant Publication Division

UNITED STATES PATENT AND TRADEMARK OFFICE

UNITED STATES DEPARTMENT OF COMMERCE
United States Patent and Trademark Office
Address: COMMISSIONER FOR PATENTS
P.O. Box 1450
Alexandria, Virginia 22313-1450
www.uspto.gov

APPLICATION NO.	FILING DATE	FIRST NAMED INVENTOR	ATTORNEY DOCKET NO.	CONFIRMATION NO.
11/796,262	04/27/2007	Hiroki Usui	SONYJP 3.3-1037 DIV	5516

530 7590 09/18/2007
LERNER, DAVID, LITTENBERG,
KRUMHOLZ & MENTLIK
600 SOUTH AVENUE WEST
WESTFIELD, NJ 07090

EXAMINER
KOONTZ, TAMMY J

ART UNIT	PAPER NUMBER
3974	

MAIL DATE	DELIVERY MODE
09/18/2007	PAPER

Please find below and/or attached an Office communication concerning this application or proceeding.

The time period for reply, if any, is set in the attached communication.

Notice of Abandonment	Application No.	Applicant(s)	
	11/796,262	USUI, HIROKI	
	Examiner	Art Unit	
	Not Assigned	None	

-- The MAILING DATE of this communication appears on the cover sheet with the correspondence address--

This application is abandoned in view of:

1. ☐ Applicant's failure to timely file a proper reply to the Office letter mailed on _____.
   (a) ☐ A reply was received on _____ (with a Certificate of Mailing or Transmission dated _____), which is after the expiration of the period for reply (including a total extension of time of _____ month(s)) which expired on _____.
   (b) ☐ A proposed reply was received on _____, but it does not constitute a proper reply under 37 CFR 1.113 (a) to the final rejection.
   (A proper reply under 37 CFR 1.113 to a final rejection consists only of: (1) a timely filed amendment which places the application in condition for allowance; (2) a timely filed Notice of Appeal (with appeal fee); or (3) a timely filed Request for Continued Examination (RCE) in compliance with 37 CFR 1.114).
   (c) ☐ A reply was received on _____ but it does not constitute a proper reply, or a bona fide attempt at a proper reply, to the non-final rejection. See 37 CFR 1.85(a) and 1.111. (See explanation in box 7 below).
   (d) ☐ No reply has been received.

2. ☐ Applicant's failure to timely pay the required issue fee and publication fee, if applicable, within the statutory period of three months from the mailing date of the Notice of Allowance (PTOL-85).
   (a) ☐ The issue fee and publication fee, if applicable, was received on _____ (with a Certificate of Mailing or Transmission dated _____), which is after the expiration of the statutory period for payment of the issue fee (and publication fee) set in the Notice of Allowance (PTOL-85).
   (b) ☐ The submitted fee of $_____ is insufficient. A balance of $_____ is due.
   The issue fee required by 37 CFR 1.18 is $_____. The publication fee, if required by 37 CFR 1.18(d), is $_____.
   (c) ☐ The issue fee and publication fee, if applicable, has not been received.

3. ☐ Applicant's failure to timely file corrected drawings as required by, and within the three-month period set in, the Notice of Allowability (PTO-37).
   (a) ☐ Proposed corrected drawings were received on _____ (with a Certificate of Mailing or Transmission dated _____), which is after the expiration of the period for reply.
   (b) ☐ No corrected drawings have been received.

4. ☑ The letter of express abandonment which is signed by the attorney or agent of record, the assignee of the entire interest, or all of the applicants.

5. ☐ The letter of express abandonment which is signed by an attorney or agent (acting in a representative capacity under 37 CFR 1.34(a)) upon the filing of a continuing application.

6. ☐ The decision by the Board of Patent Appeals and Interference rendered on _____ and because the period for seeking court review of the decision has expired and there are no allowed claims.

7. ☐ The reason(s) below:

Barbara J Debnam

Barbara J Debnam
Management & Program
Analyst Art Unit: 3900

Petitions to revive under 37 CFR 1.137(a) or (b), or requests to withdraw the holding of abandonment under 37 CFR 1.181, should be promptly filed to minimize any negative effects on patent term.

OIPE IAP28
AUG 0 9 2007
PATENT & TRADEMARK OFFICE

IFW

PTO/SB/24B (04-07)
Approved for use through 09/30/2007. OMB 0651-0031
U.S. Patent and Trademark Office; U.S. DEPARTMENT OF COMMERCE

Under the Paperwork Reduction Act of 1995, no persons are required to respond to a collection of information unless it displays a valid OMB control number.

PETITION FOR EXPRESS ABANDONMENT TO OBTAIN A REFUND

Fax the petition directly to the
Pre-Grant Publication Division at (703) 305-8568
Or Mail the petition to:
Mail Stop Express Abandonment
Commissioner for Patents
P.O. Box 1450, Alexandria, VA 22313-1450

Application Number	11/796,262-Conf. #5516
Filing Date	April 27, 2007
First Named Inventor	Hiroki Usui
Art Unit	2825
Examiner Name	B. C. Tat
Attorney Docket Number	SONYJP 3.3-1037 DIV

Petition for Express Abandonment Under 37 CFR 1.138(d) to Obtain a Refund

I hereby petition to expressly abandon the above-identified application to obtain a refund of any previously paid search fee and excess claims fee in the application. Please refund any search fee and excess claims fee paid in this application.

[X] The Director is hereby authorized to credit the fee(s) to Deposit Account No. 12-1095 .

NOTE: The provisions of 37 CFR 1.138(d) only apply to applications filed under 35 U.S.C. 111(a) on or after December 8, 2004. A paper requesting express abandonment of an application is not effective unless and until an appropriate USPTO official recognizes and acts on the paper. See the Manual of Patent Examining Procedure (MPEP), section 711.01.

TO AVOID PUBLICATION, INCLUDE FORM PTO/SB/24A AND PETITION FEE WITH THIS FORM.

Adjustment date: 08/31/2007 KKING1
05/01/2007 EAYALEW1 00000009 121095 11796262
02 FC:1111 500.00 CR

I am the:
[ ] applicant.

[ ] assignee of record of the entire interest. See 37 CFR 3.71.
Statement under 37 CFR 3.73(b) is enclosed. (Form PTO/SB/96)

[X] attorney or agent of record. Attorney or agent registration number is 47,946 .

[ ] attorney or agent acting under 37 CFR 1.34, who is authorized under 37 CFR 1.138(b) because the application is expressly abandoned in favor of a continuing application.
Attorney or agent registration number is _____ .

Signature	August 6, 2007 Date
Darren M. Simon, Esq. Typed or printed name	(908) 518-6374 Telephone Number

Note: Signatures of all the inventors or assignees of record of the entire interest or their representative(s) are required. Submit multiple forms if more than one signature is required, see below.

[X] Total of 1 forms are submitted.

I hereby certify that this paper (along with any paper referred to as being attached or enclosed) is being deposited with the U.S. Postal Service on the date shown below with sufficient postage as First Class Mail, in an envelope addressed to: MS Express Abandonment, Commissioner for Patents, P.O. Box 1450, Alexandria, VA 22313-1450.

Dated: August 6, 2007 Signature: _____ (Darren M. Simon, Esq.)

785442_1.DOC

UNITED STATES PATENT AND TRADEMARK OFFICE

Commissioner for Patents
United States Patent and Trademark Office
P.O. Box 1450
Alexandria, VA 22313-1450
www.uspto.gov

TED MASTERS
TED MASTERS & ASSOCIATES, INC.
5121 SPICEWOOD DRIVE
CHARLOTTE, NC 28227-0313

COPY MAILED

MAY 08 2008

OFFICE OF PETITIONS

In re Application of	:
Richard L. Billmers, et. al.	:
Application No. 11/796,290	: DECISION ON PETITIONS
Filed: April 28, 2007	: UNDER 37 CFR 1.78(a)(3) AND (a)(6)
Attorney Docket No. N/A	:

This is a decision on the petition under 37 CFR § 1.78, filed December 18, 2007, which is being treated as petitions under 37 CFR §§ 1.78(a)(3) and 1.78(a)(6), to accept an unintentionally delayed claim under 35 U.S.C. §§120 and 119(e) for the benefit of the prior-filed applications set forth in the concurrently filed amendment.

The petitions are **GRANTED.**

A petition for acceptance of a claim for late priority under 37 CFR §§ 1.78(a)(3) and 1.78(a)(6) is only applicable to those applications filed on or after November 29, 2000. Further, the petition is appropriate only after the expiration of the period specified in 37 CFR §§ 1.78(a)(2)(ii) and 1.78(a)(5)(ii). In addition, the petition under 37 CFR §§ 1.78(a)(3) and 1.78(a)(6) must be accompanied by:

(1) the reference required by 35 U.S.C. §§ 120 and 119(e) and 37 CFR §§ 1.78(a)(2)(i) and 1.78(a)(5)(i) of the prior-filed application, unless previously submitted;
(2) the surcharge set forth in § 1.17(t); and
(3) a statement that the entire delay between the date the claim was due under 37 CFR §§ 1.78(a)(2)(ii) and 1.78(a)(5)(ii) and the date the claim was filed was unintentional. The Director may require additional information where there is a question whether the delay was unintentional.

All the above requirements having been satisfied, the late claim for benefit of priority under 35 U.S.C. §§ 120 and 119(e) is accepted as being unintentionally delayed.

The granting of the petition to accept the delayed benefit claim to the prior-filed applications under 37 CFR §§ 1.78(a)(3) and 1.78(a)(6) should not be construed as meaning that this application is entitled to the benefit of the filing date of the prior-filed applications. In order for this application to be entitled to the benefit of the prior-filed applications, all other requirements under 35 U.S.C. §§120 and 1.78(a)(1) and (a)(2) and under 35 U.S.C. §119(e) and 37 CFR 1.78(a)(4) and (a)(5) must be met. Similarly, the fact that the corrected Filing Receipt accompanying this decision on petition includes the prior-filed applications should not be construed as meaning that applicant is entitled to the claim for benefit of priority to the prior-filed applications noted thereon. Accordingly, the examiner will, in due course, consider this benefit claim and determine whether the application is entitled to the benefit of the earlier filing date.

A corrected Filing Receipt, which includes the priority claim to the prior-filed applications, accompanies this decision on petition.

This application is being forwarded to Technology Center Art Unit 2877, for consideration by the examiner of the claim under 35 U.S.C. § §120 and 119(e) of the prior-filed nonprovisional and provisional applications.

Any questions concerning this matter may be directed to the undersigned at (571) 272-3226. All other inquiries concerning either the examination procedures or status of the application should be directed to the Technology Center.

Andrea Smith
Petitions Examiner
Office of Petitions

ATTACHMENT : Corrected Filing Receipt

UNITED STATES PATENT AND TRADEMARK OFFICE

UNITED STATES DEPARTMENT OF COMMERCE
United States Patent and Trademark Office
Address: COMMISSIONER FOR PATENTS
P.O. Box 1450
Alexandria, Virginia 22313-1450
www.uspto.gov

APPLICATION NUMBER	FILING or 371(c) DATE	GRP ART UNIT	FIL FEE REC'D	ATTY.DOCKET.NO	TOT CLAIMS	IND CLAIMS
11/796,290	04/28/2007	2877	500		19	3

CONFIRMATION NO. 3916

CORRECTED FILING RECEIPT

40742
TED MASTERS
TED MASTERS & ASSOCIATES, INC.
5121 SPICEWOOD DRIVE
CHARLOTTE, NC 28227-0313

OC000000029811227

Date Mailed: 05/07/2008

Receipt is acknowledged of this non-provisional patent application. The application will be taken up for examination in due course. Applicant will be notified as to the results of the examination. Any correspondence concerning the application must include the following identification information: the U.S. APPLICATION NUMBER, FILING DATE, NAME OF APPLICANT, and TITLE OF INVENTION. Fees transmitted by check or draft are subject to collection. Please verify the accuracy of the data presented on this receipt. **If an error is noted on this Filing Receipt, please submit a written request for a Filing Receipt Correction. Please provide a copy of this Filing Receipt with the changes noted thereon. If you received a "Notice to File Missing Parts" for this application, please submit any corrections to this Filing Receipt with your reply to the Notice. When the USPTO processes the reply to the Notice, the USPTO will generate another Filing Receipt incorporating the requested corrections**

Applicant(s)

Richard I. Billmers, Langhorne, PA;
Elizabeth J. Billmers, Langhorne, PA;
Mary E. Ludwig, Elkton, MD;
Joseph David Matchett, Lindenwold, NJ;

Power of Attorney: The patent practitioners associated with Customer Number 40742

Domestic Priority data as claimed by applicant

This appln claims benefit of 60/797,753 05/05/2006
and is a CIP of 11/197,796 08/05/2005 PAT 7,355,768
which claims benefit of 60/601,538 08/14/2004

Foreign Applications

If Required, Foreign Filing License Granted: 05/25/2007

The country code and number of your priority application, to be used for filing abroad under the Paris Convention, is **US 11/796,290**

Projected Publication Date: Request for Non-Publication Acknowledged

Non-Publication Request: Yes

Early Publication Request: No
**** SMALL ENTITY ****

Title

Monochromator employing single grating volume holograms and method of use

Preliminary Class

356

PROTECTING YOUR INVENTION OUTSIDE THE UNITED STATES

Since the rights granted by a U.S. patent extend only throughout the territory of the United States and have no effect in a foreign country, an inventor who wishes patent protection in another country must apply for a patent in a specific country or in regional patent offices. Applicants may wish to consider the filing of an international application under the Patent Cooperation Treaty (PCT). An international (PCT) application generally has the same effect as a regular national patent application in each PCT-member country. The PCT process **simplifies** the filing of patent applications on the same invention in member countries, but **does not result** in a grant of "an international patent" and does not eliminate the need of applicants to file additional documents and fees in countries where patent protection is desired.

Almost every country has its own patent law, and a person desiring a patent in a particular country must make an application for patent in that country in accordance with its particular laws. Since the laws of many countries differ in various respects from the patent law of the United States, applicants are advised to seek guidance from specific foreign countries to ensure that patent rights are not lost prematurely.

Applicants also are advised that in the case of inventions made in the United States, the Director of the USPTO must issue a license before applicants can apply for a patent in a foreign country. The filing of a U.S. patent application serves as a request for a foreign filing license. The application's filing receipt contains further information and guidance as to the status of applicant's license for foreign filing.

Applicants may wish to consult the USPTO booklet, "General Information Concerning Patents" (specifically, the section entitled "Treaties and Foreign Patents") for more information on timeframes and deadlines for filing foreign patent applications. The guide is available either by contacting the USPTO Contact Center at 800-786-9199, or it can be viewed on the USPTO website at http://www.uspto.gov/web/offices/pac/doc/general/index.html.

For information on preventing theft of your intellectual property (patents, trademarks and copyrights), you may wish to consult the U.S. Government website, http://www.stopfakes.gov. Part of a Department of Commerce initiative, this website includes self-help "toolkits" giving innovators guidance on how to protect intellectual property in specific countries such as China, Korea and Mexico. For questions regarding patent enforcement issues, applicants may call the U.S. Government hotline at 1-866-999-HALT (1-866-999-4158).

LICENSE FOR FOREIGN FILING UNDER

Title 35, United States Code, Section 184

Title 37, Code of Federal Regulations, 5.11 & 5.15

GRANTED

The applicant has been granted a license under 35 U.S.C. 184, if the phrase "IF REQUIRED, FOREIGN FILING LICENSE GRANTED" followed by a date appears on this form. Such licenses are issued in all applications where the conditions for issuance of a license have been met, regardless of whether or not a license may be required as

set forth in 37 CFR 5.15. The scope and limitations of this license are set forth in 37 CFR 5.15(a) unless an earlier license has been issued under 37 CFR 5.15(b). The license is subject to revocation upon written notification. The date indicated is the effective date of the license, unless an earlier license of similar scope has been granted under 37 CFR 5.13 or 5.14.

This license is to be retained by the licensee and may be used at any time on or after the effective date thereof unless it is revoked. This license is automatically transferred to any related applications(s) filed under 37 CFR 1.53(d). This license is not retroactive.

The grant of a license does not in any way lessen the responsibility of a licensee for the security of the subject matter as imposed by any Government contract or the provisions of existing laws relating to espionage and the national security or the export of technical data. Licensees should apprise themselves of current regulations especially with respect to certain countries, of other agencies, particularly the Office of Defense Trade Controls, Department of State (with respect to Arms, Munitions and Implements of War (22 CFR 121-128)); the Bureau of Industry and Security, Department of Commerce (15 CFR parts 730-774); the Office of Foreign AssetsControl, Department of Treasury (31 CFR Parts 500+) and the Department of Energy.

NOT GRANTED

No license under 35 U.S.C. 184 has been granted at this time, if the phrase "IF REQUIRED, FOREIGN FILING LICENSE GRANTED" DOES NOT appear on this form. Applicant may still petition for a license under 37 CFR 5.12, if a license is desired before the expiration of 6 months from the filing date of the application. If 6 months has lapsed from the filing date of this application and the licensee has not received any indication of a secrecy order under 35 U.S.C. 181, the licensee may foreign file the application pursuant to 37 CFR 5.15(b).

SPE RESPONSE FOR CERTIFICATE OF CORRECTION

Paper No.: _____

DATE : 3/25/09

TO SPE OF : ART UNIT 2877

SUBJECT : Request for Certificate of Correction for Appl. No.: 11796290 Patent No.: 7480048 B1

Please respond to this request for a certificate of correction within 7 days.

FOR IFW FILES:

Please review the requested changes/corrections as shown in the **COCIN** document(s) in the IFW application image. No new matter should be introduced, nor should the scope or meaning of the claims be changed.

Please complete the response (see below) and forward the completed response to scanning using document code **COCX**.

FOR PAPER FILES:

Please review the requested changes/corrections as shown in the attached certificate of correction. Please complete this form (see below) and forward it with the file to:

Certificates of Correction Branch (CofC)
South Tower - 9A22
Palm Location 7580
You can fax the Directors/SPE response to 571-270-9990

LAMONTE NEWSOME
Certificates of Correction Branch
703-308-9390 ext. 112

Thank You For Your Assistance

The request for issuing the above-identified correction(s) is hereby:
Note your decision on the appropriate box.

- ☐ **Approved XXX** — **All** changes apply.
- ☐ **Approved in Part** — Specify below which changes **do not** apply.
- ☐ **Denied** — State the reasons for denial below.

Comments: APPROVED.

/Gregory J. Toatley, Jr./ 2877
SPE Art Unit

UNITED STATES PATENT AND TRADEMARK OFFICE

UNITED STATES DEPARTMENT OF COMMERCE
United States Patent and Trademark Office
Address: COMMISSIONER FOR PATENTS
P.O. Box 1450
Alexandria, Virginia 22313-1450
www.uspto.gov

MACMILLAN SOBANSKI & TODD, LLC
ONE MARITIME PLAZA FIFTH FLOOR
720 WATER STREET
TOLEDO, OH 43604-1619

Mail Date: 04/21/2010

Applicant	: Karl William Swonger JR.	: DECISION ON REQUEST FOR
Patent Number	: 7607857	: RECALCULATION of PATENT
Issue Date	: 10/27/2009	: TERM ADJUSTMENT IN VIEW
Appliction No	: 11/796,301	: OF WYETH AND NOTICE OF INTENT TO
Filed	: 04/27/2007	: ISSUE CERTIFICATE OF CORRECTION
		:

The Request for Recalculation is **GRANTED** to the extent indicated.

The patent term adjustment has been determined to be **0** days. The USPTO will *sua sponte* issue a certificate of correction reflecting the amount of PTA days determined by the recalculation.

Prior to the issuance of the certificate of correction, the USPTO will afford patentee an opportunity to be heard and request reconsideration. Accordingly, patentee has **one month or thirty (30) days**, whichever is longer, to file a request for reconsideration of this patent term adjustment calculation. See 35 U.S.C. 154(b)(3)(B)(ii) and 37 CFR 1.322(a)(4). No extensions of time will be granted under 37 CFR 1.136.

Patentee should use document code PET.OP if electronically filing a request for reconsideration of this patent term adjustment calculation. The patentee must also include the information required by 37 CFR 1.705(b)(2) and the fee required by 37 CFR 1.18(e). If patentee does not file a timely request for reconsideration of this patent term adjustment calculation including the information required by 37 CFR 1.705(b)(2) and the fee required by 37 CFR 1.18(e), the USPTO will issue a certificate of correction reflecting the PTA determination noted above.

Patentee should be aware that in order to preserve the right to review in the United States District Court for the District of Columbia of the USPTO patent term adjustment determination, patentee must ensure that he or she also take the steps required under 35 U.S.C. 154(b)(4)(A) in a timely manner. Nothing in the request for recalculation should be construed as providing an alternative time frame for commencing a civil action under 35 U.S.C. 154(b)(4)(A).

Any questions concerning this decision should be directed to the Office of Patent Legal Administration at 571-272-7702.

UNITED STATES PATENT AND TRADEMARK OFFICE

Commissioner for Patents
United States Patent and Trademark Office
P.O. Box 1450
Alexandria, VA 22313-1450
www.uspto.gov

GIBSON & DERNIER L.L.P.
900 ROUTE 9 NORTH
SUITE 504
WOODBRIDGE NJ 07095

COPY MAILED

DEC 28 2009

OFFICE OF PETITIONS

In re Application of	:	
Yardeni et al.	:	DECISION ON PETITION
Application No. 11/796,304	:	TO WITHDRAW
Filed: April 27, 2007	:	FROM RECORD
Attorney Docket No. 763/2	:	

This is a decision on the request to withdraw as attorney of record under 37 C.F.R. § 1.36, filed October 8, 2009.

The request is **NOT APPROVED**.

The Request for Withdrawal as Attorney or Agent and Change of Correspondence Address submitted on October 8, 2009 is hereby not accepted. Petitioner has not complied with current USPTO requirements, as set forth in 37 CFR 10.40 concerning Request for Withdrawal as Attorney and Change of Correspondence Address. Specifically, pursuant to 37 CFR 10.40, the Office will require the practitioner(s) to certify that he, she or they have:

> (1) given reasonable notice to the client, prior to the expiration of the reply period, that the practitioner(s) intends to withdraw from employment;
>
> (2) delivered to the client or a duly authorized representative of the client all papers and property (including funds) to which the client is entitled; and
>
> (3) notified the client of any replies that may be due and the time frame within which the client must respond.

Petitioner has not complied with the above certifications. Petitioner contends that "the applicant instructed the former attorney of this firm to take their file to a new firm, thereby discharging this firm". This instruction by applicant did not discharge petitioner from their responsibility.

Additionally, the Office will only accept correspondence address changes to the most current address information provided for the assignee of the entire interest *who properly became of record under 37 CFR 3.71,* or, if no assignee of the entire interest has properly been made of record, the most current address information provided for the first named inventor. 37 CFR 3.71(c) states:

> *An assignee becomes of record either in a national patent application or a reexamination proceeding by filing a statement in compliance with § 3.73(b) that is signed by a party who is authorized to act on behalf of the assignee.*

Therefore, as there is currently no Statement under 37 CFR 3.73(b) of record in the instant application, the Office cannot change the correspondence address to the address on the Request to Withdraw.

All future communications from the Office will continue to be directed to the above-listed address until otherwise notified by applicant.

Currently, there is an outstanding Office action mailed October 2, 2009 that requires a reply.

Telephone inquires concerning this decision should be directed to the undersigned at 571-272-7751.

Joan Olszewski

Joan Olszewski
Petitions Examiner
Office of Petitions

UNITED STATES PATENT AND TRADEMARK OFFICE

Commissioner for Patents
United States Patent and Trademark Office
P.O. Box 1450
Alexandria, VA 22313-1450
www.uspto.gov

MAILED

MAR 30 2009

OFFICE OF PETITIONS

Olympic Patent Works PLLC
P.O. Box 4277
Seattle, WA 98104

In re Application of	:	
Brett Hunter	:	
Application No. 11/796,305	:	DECISION ON PETITION
Filed: April 27, 2007	:	TO WITHDRAW
Attorney Docket No. 35083.001	:	FROM RECORD
	:	

This is a decision on the Request to Withdraw as attorney or agent of record under 37 C.F.R. § 1.36(b), filed January 8, 2009.

The request is **NOT APPROVED** because it is moot.

A review of the file record indicates that the power of attorney to Olympic Patent Works, PLLC has been revoked by the applicant of the patent application on February 3, 2009. Accordingly, the request to withdraw under 37 C.F.R. § 1.36(b) is moot.

All future communications from the Office will continue to be directed to the below-listed address until otherwise notified by applicant.

Telephone inquires concerning this decision should be directed to Terri Williams at 571-272-2991.

Terri Williams
Petitions Examiner
Office of Petitions

cc: **Harshaw Research, Inc.**
210 W. Tecumseh Street
Ottawa, KS 66067

UNITED STATES PATENT AND TRADEMARK OFFICE

UNITED STATES DEPARTMENT OF COMMERCE
United States Patent and Trademark Office
Address: COMMISSIONER FOR PATENTS
P.O. Box 1450
Alexandria, Virginia 22313-1450
www.uspto.gov

APPLICATION NO.	FILING DATE	FIRST NAMED INVENTOR	ATTORNEY DOCKET NO.	CONFIRMATION NO.
11/796,315	04/27/2007	Bruce Hamilton	10060766-1	4121

7590 12/11/2009
AGILENT TECHNOLOGIES INC.
INTELLECTUAL PROPERTY ADMINISTRATION,LEGAL DEPT.
MS BLDG. E P.O. BOX 7599
LOVELAND, CO 80537

EXAMINER
LEE, THOMAS C

ART UNIT	PAPER NUMBER
2115	

NOTIFICATION DATE	DELIVERY MODE
12/11/2009	ELECTRONIC

DECISION GRANTING PETITION UNDER 37 CFR 1.138(d)

The declaration of express abandonment is recognized

This is in response to the petition under 37 CFR 1.138(d), requesting for a refund of any previously paid search fee and excess claims fee in the above-identified application.

The petition is granted.

The express abandonment is recognized. Any previously paid search fee and excess claims fee are hereby refunded.

Telephone inquiries should be directed to the Office of Data Management at (571) 272-4200.

Betty Powell

Patent Publication Branch
Office of Data Management

FORM PET651G (Rev. 08/07)

UNITED STATES PATENT AND TRADEMARK OFFICE

Commissioner for Patents
United States Patent and Trademark Office
P.O. Box 1450
Alexandria, VA 22313-1450
www.uspto.gov

PHILLIPS LYTLE LLP
INTELLECTUAL PROPERTY GROUP
3400 HSBC CENTER
BUFFALO NY 14203-3509

COPY MAILED
MAY 2 3 2008
OFFICE OF PETITIONS

In re Application of :
El Bayoumy and Lunin :
Application No. 11/796,318 : DECISION REFUSING STATUS
Filed: April 27, 2007 : UNDER 37 CFR 1.47(a) AND
Attorney Docket No. MD 295 1 : DECISION ON PETITION UNDER
For: COMPOSITE RING GEAR WITH METALLIC GEAR : PETITION UNDER 37 CFR 1.137(b)
INSERT, AND METHOD OF FORMING SAME

This is a decision on the petition under 37 CFR 1.47(a), filed February 1, 2008. This is also a decision on the petition under 37 CFR 1.137(b) filed February 1, 2008.

The petition under 37 CFR 1.47(a) is **dismissed.**

The petition under 37 CFR 1.137(b) is also **dismissed.**

Any request for reconsideration under this decision must be submitted within TWO (2) MONTHS from the mail date of this decision. Extensions of time under 37 CFR 1.136(a) are permitted. Failure to respond will result in the abandonment of this application. Any response should be titled "Request for Reconsideration of Petitions Under 37 CFR 1.47(a) and 37 CFR 1.137(b) .

The above-identified application was filed on April 27, 2007, without an executed oath or declaration. Accordingly, a "Notice to File Missing Parts Nonprovisional Application" (the "Notice") was mailed on May 27, 2007, requiring an executed oath or declaration and a surcharge for the late filing of the oath or declaration. The Notice allowed an extendable period for response of two months from its mailing date. A response was not received within the allowable period and the application became abandoned on July 28, 2007. The instant petitions were filed on February 1, 2008.

TREATMENT UNDER 37 CFR 1.47(a)

A grantable petition under 37 CFR 1.47(a) requires:

(1) proof that the non-signing inventor(s) cannot be reached or refuses to sign the oath or declaration after having been presented with the application papers (specification, claims, and drawings);

(2) an acceptable oath or declaration in compliance with 35 U.S.C. §§ 115 and 116;

(3) the petition fee,

(4) a statement of the last known address of the non-signing inventor,

The instant petition lacks items (1) and (2) as set forth above.

As to item (1), the instant petition does not provide sufficient evidence that a complete copy of the application papers was sent to the non-signing inventor. Further to this point, Section 409.03(d) of the *Manual of Patent Examining Procedure* (MPEP) provides, in pertinent part, that:

> [a] refusal by an inventor to sign an oath or declaration when the inventor has not been presented with the application papers does not itself suggest that the inventor is refusing to join the application unless it is clear that the inventor understands exactly what he or she is being asked to sign and refuses to accept the application papers. A copy of the application paper should be sent to the last known address of the non-signing inventor . . .
>
> Where a refusal of the inventor to sign the application papers is alleged, the circumstances of the presentation of the application papers and of the refusal must be specified in a statement of facts by the person who presented the inventor with the application papers and/or to whom the refusal was made. Statements by a party not present when an oral refusal is made will not be accepted.
>
> Proof that a *bona fide* attempt was made to present a copy of the application papers (specification, including claims, drawings, and oath or declaration) to the nonsigning inventor for signature, but the inventor refused to accept delivery of the papers or expressly stated that the application papers should not be sent, may be sufficient. When there is an express oral refusal, that fact along with the time and place of the refusal must be stated in the statement of facts. When there is an express written refusal, a copy of the document evidencing that refusal must be made part of the statement of facts. The document may be redacted to remove material not related to the inventor's reasons for refusal.
>
> When it is concluded by the 37 CFR 1.47 applicant that a nonsigning inventor's conduct constitutes a refusal, all facts upon which that conclusion is based should be stated in the statement of facts in support of the petition or directly in the petition. If there is documentary evidence to support facts alleged in the petition or in any statement of facts, such evidence should be submitted. Whenever a nonsigning inventor gives a reason for refusing to sign the application oath or declaration, that reason should be stated in the petition.

While the instant petition states that inventor Lunin has refused to join the prosecution of the application, it is not clear whether inventor Lunin was provided with a complete copy of the application papers, and not just the declaration and assignment. In order for inventor Lunin's refusal to have merit relative to the instant petition, it must be clear that he was provided with a complete copy of the application papers or an effort was made to provide him with the same and he refused.

As to item (2), Section 409.03 of the *Manual of Patent Examining Procedure* (MPEP) provides, in pertinent part, that:

> (A) All the available joint inventors must (1) make oath or declaration on their own behalf as required by 37 CFR 1.63 or 1.175 (see MPEP § 602 § 605.01, and § 1414) and (2) make oath or declaration on behalf of the nonsigning inventor as required by 37 CFR 1.64. An oath or declaration signed by all of the available joint inventors with the signature block of the nonsigning inventor(s) left blank may be treated as having been signed by all the available joint inventors on behalf of the nonsigning inventor(s), unless otherwise indicated.

The declaration filed February 1, 2008, is defective because the signature blocks for the inventors are not contained in one document or do not appear on two separate, but complete, declarations containing a signature block for both inventors. The declarations, as filed, do not give the impression that the inventors are signing on their own behalf and on behalf of the non-signing inventor and incorrectly cite both joint inventors as the "first or sole inventor. The renewed petition must be accompanied by a declaration that complies with Section 409.03 as cited above.

TREATMENT UNDER 37 CFR 1.137(b)

Effective December 1, 1997, the provisions of 37 CFR 1.137(b) now provide that where the delay in reply was unintentional, a petition may be filed to revive an abandoned application or a lapsed patent pursuant to 37 CFR 1.137(b). A grantable petition pursuant to 37 CFR 1.137(b) must be accompanied by:

(1) the required reply, unless previously filed. In a non-provisional application abandoned for failure to prosecute, the required reply may be met by the filing of a continuing application. In an application or patent, abandoned or lapsed for failure to pay the issue fee, or any portion thereof, the required reply must be the payment of the issue fee or any outstanding balance thereof.

(2) the petition fee as set forth in 37 CFR 1.17(m);

(3) a statement that the entire delay in filing the required reply from the due date for the reply until the filing of a grantable petition pursuant to 37 CFR 1.137(b) was unintentional. The Commissioner may require additional information where there is a question whether the delay was unintentional; and

(4) any terminal disclaimer (and fee set forth in 37 CFR 1.20(d)) required pursuant to 37 CFR 1.137(c).

The instant petition does not satisfy the requirements of item (1) above.

The Notice to File Missing Parts of Non-Provisional Application required a properly executed declaration to be filed. The petition under 37 CFR 1.47(a) is not grantable and, therefore, neither is the petition under 37 CFR 1.137(b). The renewed petition under 37 CFR 1.137(b) must be accompanied by either a properly executed declaration or a grantable petition under 37 CFR 1.47(a).

Further correspondence with respect to this matter should be addressed as follows:

By mail: Mail Stop Petitions
Commissioner for Patents
P.O. Box 1450
Alexandria, VA 22313-1450

By FAX: (571) 273-8300
Attn: Office of Petitions

Telephone inquiries concerning this decision should be directed to the undersigned at (571) 272-3222.

Kenya A. McLaughlin
Petitions Attorney
Office of Petitions

UNITED STATES PATENT AND TRADEMARK OFFICE

Commissioner for Patents
United States Patent and Trademark Office
P.O. Box 1450
Alexandria, VA 22313-1450
www.uspto.gov

PHILLIPS LYTLE LLP
INTELLECTUAL PROPERTY GROUP
3400 HSBC CENTER
BUFFALO NY 14203-3509

COPY MAILED
DEC 19 2008

In re Application of	:
El Bayoumy and Lunin	:
Application No. 11/796,318	: DECISION REFUSING STATUS
Filed: April 27, 2007	: UNDER 37 CFR 1.47(a) AND
Attorney Docket No. MD 295 1	: DECISION ON PETITION UNDER
For: COMPOSITE RING GEAR WITH METALLIC GEAR INSERT, AND METHOD OF FORMING SAME	: PETITION UNDER 37 CFR 1.137(b)

This is a decision on the renewed petition under 37 CFR 1.47(a), filed November 24, 2008. This is also a decision on the petition under 37 CFR 1.137(b) filed November 24, 2008.

The petition under 37 CFR 1.47(a) is **dismissed.**

The petition under 37 CFR 1.137(b) is also **dismissed**.

Any request for reconsideration under this decision must be submitted within TWO (2) MONTHS from the mail date of this decision. Extensions of time under 37 CFR 1.136(a) are permitted. Failure to respond will result in the abandonment of this application. Any response should be titled "Request for Reconsideration of Petitions Under 37 CFR 1.47(a) and 37 CFR 1.137(b) .

The above-identified application was filed on April 27, 2007, without an executed oath or declaration. Accordingly, a "Notice to File Missing Parts Nonprovisional Application" (the "Notice") was mailed on May 27, 2007, requiring an executed oath or declaration and a surcharge for the late filing of the oath or declaration. The Notice allowed an extendable period for response of two months from its mailing date. A response was not received within the allowable period and the application became abandoned on July 28, 2007. Petitions were filed on February 1, 2008, and dismissed by a decision mailed May 23, 2008..

TREATMENT UNDER 37 CFR 1.47(a)

A grantable petition under 37 CFR 1.47(a) requires:

(1) proof that the non-signing inventor(s) cannot be reached or refuses to sign the oath or declaration after having been presented with the application papers (specification, claims, and drawings);

(2) an acceptable oath or declaration in compliance with 35 U.S.C. §§ 115 and 116;

(3) the petition fee,

(4) a statement of the last known address of the non-signing inventor,

The instant petition lacks item (2) as set forth above.

As to item (2), the declaration filed November 24, 2008, does not provide a residential mailing address in the signature block fro inventor Lunin. Further to this pint, 37 CFR 1.63(c) provides that:

c) Unless such information is supplied on an application data sheet in accordance with § 1.76, the oath or declaration must also identify:

(1) The mailing address, and the residence if an inventor lives at a location which is different from where the inventor customarily receives mail, of each inventor; and

(2) Any foreign application for patent (or inventor's certificate) for which a claim for priority is made pursuant to § 1.55, and any foreign application having a filing date before that of the application on which priority is claimed, by specifying the application number, country, day, month, and year of its filing

The renewed petition must be accompanied by a proper declaration under 37 CFR 1.63 that includes the last known mailing address for inventor Lunin.

TREATMENT UNDER 37 CFR 1.137(b)

Effective December 1, 1997, the provisions of 37 CFR 1.137(b) now provide that where the delay in reply was unintentional, a petition may be filed to revive an abandoned application or a lapsed patent pursuant to 37 CFR 1.137(b). A grantable petition pursuant to 37 CFR 1.137(b) must be accompanied by:

(1) the required reply, unless previously filed. In a non-provisional application abandoned for failure to prosecute, the required reply may be met by the filing of a continuing application. In an application or patent, abandoned or lapsed for failure to pay the issue fee, or any portion thereof, the required reply must be the payment of the issue fee or any outstanding balance thereof.

(2) the petition fee as set forth in 37 CFR 1.17(m);

(3) a statement that the entire delay in filing the required reply from the due date for the reply until the filing of a grantable petition pursuant to 37 CFR 1.137(b) was unintentional. The Commissioner may require additional information where there is a question whether the delay was unintentional; and

(4) any terminal disclaimer (and fee set forth in 37 CFR 1.20(d)) required pursuant to 37 CFR 1.137(c).

The instant petition does not satisfy the requirements of item (1) above.

The Notice to File Missing Parts of Non-Provisional Application required a properly executed declaration to be filed. The petition under 37 CFR 1.47(a) is not grantable and, therefore, neither is the petition under 37 CFR 1.137(b). The renewed petition under 37 CFR 1.137(b) must be accompanied by either a properly executed declaration or a grantable petition under 37 CFR 1.47(a).

Further correspondence with respect to this matter should be addressed as follows:

By mail: Mail Stop Petitions
Commissioner for Patents
P.O. Box 1450
Alexandria, VA 22313-1450

By FAX: (571) 273-8300
Attn: Office of Petitions

Telephone inquiries concerning this decision should be directed to the undersigned at (571) 272-3222.

Kenya A. McLaughlin
Petitions Attorney
Office of Petitions

UNITED STATES PATENT AND TRADEMARK OFFICE

Commissioner for Patents
United States Patent and Trademark Office
P.O. Box 1450
Alexandria, VA 22313-1450
www.uspto.gov

COPY MAILED

JUL 3 1 2009

OFFICE OF PETITIONS

PHILLIPS LYTLE LLP
INTELLECTUAL PROPERTY GROUP
3400 HSBC CENTER
BUFFALO NY 14203-3509

In re Application of :
El Bayoumy and Lunin :
Application No. 11/796,318 : DECISION ACCORDINGSTATUS
Filed: April 27, 2007 : UNDER 37 CFR 1.47(a) AND
Attorney Docket No. MD 295 1 : DECISION ON PETITION UNDER
For: COMPOSITE RING GEAR WITH METALLIC GEAR INSERT, AND METHOD OF FORMING SAME : PETITION UNDER 37 CFR 1.137(b)

This is in response to the renewed petitions under 37 CFR 1.47(a) and 37 CFR 1.137(b), filed, June 19, 2009

The petition under 37 CFR 1.47(a) is **GRANTED**.

The petition under 37 CFR 1.137(b) is also **GRANTED**.

The above-identified application and papers have been reviewed and found in compliance with 37 CFR 1.47(a). This application is hereby accorded Rule 1.47(a) status.

The above-identified application was filed on April 27, 2007, without an executed oath or declaration. Accordingly, a "Notice to File Missing Parts Nonprovisional Application" (the "Notice") was mailed on May 27, 2007, requiring an executed oath or declaration and a surcharge for the late filing of the oath or declaration. The Notice allowed an extendable period for response of two months from its mailing date. A response was not received within the allowable period and the application became abandoned on July 28, 2007. Petitions were filed on February 1, 2008, and dismissed by a decision mailed May 23, 2008. Renewed petitions were filed on November 24, 2008, and dismissed by a decision mailed December 19, 2008.

Petitioner has shown that inventor Lunin has constructively refused to join the application after having been presented with the application papers. The above-identified application and papers have been reviewed and found in compliance with 37 CFR 1.47(a). This application is hereby accorded Rule 1.47(a) status.

As provided in Rule 1.47(c), this Office will forward notice of this application's filing to the non-signing inventor at the address given in the petition. Notice of the filing of this application will also be published in the Official Gazette.

This application will be directed to the Office of Patent Patent Application Processing for further processing.

Telephone inquiries concerning this decision should be directed to the undersigned at (571) 272-3222.

Kenya A. McLaughlin
Petitions Attorney
Office of Petitions

UNITED STATES PATENT AND TRADEMARK OFFICE

Commissioner for Patents
United States Patent and Trademark Office
P.O. Box 1450
Alexandria, VA 22313-1450
www.uspto.gov

CROCKETT & CROCKETT, P.C.
26020 ACERO
SUITE 200
MISSION VIEJO CA 92691

COPY MAILED

JUL 3 1 2009

OFFICE OF PETITIONS

In re Application of	:	
Scott Burwell	:	DECISION ON PETITION
Application No. 11/796,319	:	TO WITHDRAW
Filed: April 26, 2007	:	FROM RECORD
Attorney Docket No. 212/880	:	

This is a decision on the request to withdraw as attorney of record under 37 C.F.R. § 1.36, filed June 26, 2009.

The request is **NOT APPROVED**.

The Request for Withdrawal as Attorney or Agent and Change of Correspondence Address submitted on June 26, 2009 is hereby not accepted. Petitioner has not complied with current USPTO requirements, as set forth in 37 CFR 10.40 concerning Request for Withdrawal as Attorney and Change of Correspondence Address. Specifically, pursuant to 37 CFR 10.40, the Office will require the practitioner(s) to certify that he, she or they have:

> (1) given reasonable notice to the client, prior to the expiration of the reply period, that the practitioner(s) intends to withdraw from employment;
>
> (2) delivered to the client or a duly authorized representative of the client all papers and property (including funds) to which the client is entitled; and
>
> (3) notified the client of any replies that may be due and the time frame within which the client must respond.

Petitioner has not complied with items (1) and (3) of the above certifications.

All future communications from the Office will continue to be directed to the above-listed address until properly notified.

There is an outstanding Office action mailed June 11, 2009 that requires a reply.

Telephone inquires concerning this decision should be directed to Joan Olszewski at 571-272-7751.

/Liana Walsh/
Liana Walsh
Petitions Examiner
Office of Petitions

UNITED STATES PATENT AND TRADEMARK OFFICE

Commissioner for Patents
United States Patent and Trademark Office
P.O. Box 1450
Alexandria, VA 22313-1450
www.uspto.gov

CROCKETT & CROCKETT, P.C.
26020 ACERO
SUITE 200
MISSION VIEJO CA 92691

COPY MAILED

SEP 03 2009

OFFICE OF PETITIONS

In re Application of	:	
Scott Burwell	:	DECISION ON PETITION
Application No. 11/796,319	:	TO WITHDRAW
Filed: April 26, 2007	:	FROM RECORD
Attorney Docket No. 212/880	:	

This is a decision on the renewed Request to Withdraw as attorney or agent of record under 37 C.F.R. § 1.36(b), filed August 4, 2009.

The request is **APPROVED**.

A grantable request to withdraw as attorney/agent of record must be signed by every attorney/agent seeking to withdraw or contain a clear indication that one attorney is signing on behalf of another/others. The Office will require the practitioner(s) to certify that he, she or they have: (1) given reasonable notice to the client, prior to the expiration of the reply period, which the practitioner(s) intends to withdraw from employment; (2) delivered to the client or a duly authorized representative of the client all papers and property (including funds) to which the client is entitled; and (3) notified the client of any replies that may be due and the time frame within which the client must respond, pursuant to 37 CFR 10.40 (c).

The request was signed by Paul J. Backofen on behalf of all attorneys of record who are associated with Customer No. 23371.

All attorneys/agents associated with Customer Number 23371 have been withdrawn. Applicant is reminded that there is no attorney of record at this time.

All future correspondence will be directed to the first named inventor at the address indicated below.

Currently, there is an outstanding Office action mailed June 11, 2009 that requires a reply.

Telephone inquires concerning this decision should be directed to the undersigned at (571) 272-7751. All other inquires concerning either the examination or status of the application should be directed to the Technology Center.

Joan Olszewski
Petitions Examiner
Office of Petitions

cc: Scott Burwell
1313 Calle Avanzado
San Clemente CA 92673

UNITED STATES PATENT AND TRADEMARK OFFICE

UNITED STATES DEPARTMENT OF COMMERCE
United States Patent and Trademark Office
Address: COMMISSIONER FOR PATENTS
P.O. Box 1450
Alexandria, Virginia 22313-1450
www.uspto.gov

APPLICATION NO.	FILING DATE	FIRST NAMED INVENTOR	ATTORNEY DOCKET NO.	CONFIRMATION NO.
11/796,327	04/27/2007	Min-Jo Choi	0003595USU/3062	3173

7590 07/03/2008

Paul D. Greeley
Ohlandt, Greeley, Ruggiero & Perle, L.L.P.
10th Floor
One Landmark Square
Stamford, CT 06901-2682

EXAMINER
REDDING, DAVID A

ART UNIT	PAPER NUMBER
3723	

MAIL DATE	DELIVERY MODE
07/03/2008	PAPER

DECISION GRANTING PETITION UNDER 37 CFR 1.138(d)

The declaration of express abandonment is recognized

This is in response to the petition under 37 CFR 1.138(d), requesting for a refund of any previously paid search fee and excess claims fee in the above-identified application.

The petition is granted.

The express abandonment is recognized. Any previously paid search fee and excess claims fee are hereby refunded.

Telephone inquiries should be directed to the Office of Data Management at (571) 272-4200.

Nioni Farmer

Patent Publication Branch
Office of Data Management

Refund Ref:
07/09/2008 NFARMER 0000163512

CHECK Refund Total: $500.00

Adjustment date: 07/09/2008 NFARMER
05/01/2007 AAHMADI 00000023 11796327
02 FC:1111 -500.00 OP

FORM PET651G (Rev. 08/07)

UNITED STATES PATENT AND TRADEMARK OFFICE

Commissioner for Patents
United States Patent and Trademark Office
P.O. Box 1450
Alexandria, VA 22313-1450
www.uspto.gov

MCCORMICK PAULDING & HUBER LLP
185 ASYLUM STREET
CITY PLACE II
HARTFORD CT 06103

COPY MAILED

SEP 12 2007

OFFICE OF PETITIONS

In re Application of	:	
Foschini, et al.	:	
Application No. 11/796,328	:	DECISION ON PETITION
Filed: April 27, 2007	:	
Attorney Docket No. 7650-0045	:	

This is a decision on the petition under 37 C.F.R. § 1.53, filed July 19, 2007, to accord the above application a filing date of April 27, 2007, with Figure 5 of the drawings as part of the original disclosure.

The petition is **GRANTED**.

Application papers in the above-identified application were filed on April 27, 2007. However, on May 23, 2007, the Initial Patent Examination Division mailed applicant a "Notice of Omitted Item(s) in a Nonprovisional Application". Applicants were notified that the application papers had been accorded a filing date; however, Figure 5 of the drawings appeared to have been omitted.

In response, applicants timely filed the instant petition on July 19, 2007. Accompanying the petition was a copy of Figure 5. Applicants maintain that the application as originally filed included this drawing figure. In support thereof, applicant submitted a postcard receipt identifying this application, itemizing 7 pages of formal drawings as enclosed, bearing a United States Patent and Trademark Office date-stamp of April 27, 2007, and lacking any notation of non-receipt of any item listed.

A postcard receipt which itemizes and properly identifies the items which are being filed serves as *prima facie* evidence of receipt in the Office of all items listed thereon on the date stamped thereon by the Office. See MPEP 503.

Given the basis for granting the petition, the $400 petition fee has been refunded to Deposit Account No. 13-0235.

The application is being forwarded to the Office of Initial Patent Examination (OIPE) for further processing with a filing date of April 27, 2007, using the application papers received in the Office on that date and Figure 5 of the drawings as resupplied on petition filed July 19, 2007.

Telephone inquiries related to this decision should be directed to the undersigned at 571-272-3207.

Cliff Congo
Petitions Attorney
Office of Petitions

UNITED STATES PATENT AND TRADEMARK OFFICE

UNITED STATES DEPARTMENT OF COMMERCE
United States Patent and Trademark Office
Address: COMMISSIONER FOR PATENTS
P.O. Box 1450
Alexandria, Virginia 22313-1450
www.uspto.gov

BLAKELY SOKOLOFF TAYLOR & ZAFMAN LLP
1279 OAKMEAD PARKWAY
SUNNYVALE, CA 94085-4040

Mail Date: 04/21/2010

Applicant	: Yalun Li	: DECISION ON REQUEST FOR
Patent Number	: 7616586	: RECALCULATION of PATENT
Issue Date	: 11/10/2009	: TERM ADJUSTMENT IN VIEW
Appliction No	: 11/796,335	: OF WYETH AND NOTICE OF INTENT TO
Filed	: 04/26/2007	: ISSUE CERTIFICATE OF CORRECTION
		:

The Request for Recalculation is **GRANTED** to the extent indicated.

The patent term adjustment has been determined to be **0** days. The USPTO will *sua sponte* issue a certificate of correction reflecting the amount of PTA days determined by the recalculation.

Prior to the issuance of the certificate of correction, the USPTO will afford patentee an opportunity to be heard and request reconsideration. Accordingly, patentee has **one month or thirty (30) days**, whichever is longer, to file a request for reconsideration of this patent term adjustment calculation. See 35 U.S.C. 154(b)(3)(B)(ii) and 37 CFR 1.322(a)(4). No extensions of time will be granted under 37 CFR 1.136.

Patentee should use document code PET.OP if electronically filing a request for reconsideration of this patent term adjustment calculation. The patentee must also include the information required by 37 CFR 1.705(b)(2) and the fee required by 37 CFR 1.18(e). If patentee does not file a timely request for reconsideration of this patent term adjustment calculation including the information required by 37 CFR 1.705(b)(2) and the fee required by 37 CFR 1.18(e), the USPTO will issue a certificate of correction reflecting the PTA determination noted above.

Patentee should be aware that in order to preserve the right to review in the United States District Court for the District of Columbia of the USPTO patent term adjustment determination, patentee must ensure that he or she also take the steps required under 35 U.S.C. 154(b)(4)(A) in a timely manner. Nothing in the request for recalculation should be construed as providing an alternative time frame for commencing a civil action under 35 U.S.C. 154(b)(4)(A).

Any questions concerning this decision should be directed to the Office of Patent Legal Administration at 571-272-7702.

UNITED STATES PATENT AND TRADEMARK OFFICE

Commissioner for Patents
United States Patent and Trademark Office
P.O. Box 1450
Alexandria, VA 22313-1450
www.uspto.gov

TYCO HEALTHCARE GROUP LP
60 MIDDLETOWN AVENUE
NORTH HAVEN, CT 06473

MAILED

APR 20 2009

OFFICE OF PETITIONS

In re Application of	:	
TRANDAFIR, Titi	:	
Application No. 11/796,340	:	DECISION ON PETITION
Filed: April 27, 2007	:	TO WITHDRAW
Attorney Docket No. **1429-36 CIP**	:	FROM RECORD
	:	

This is a decision on the Request to Withdraw as attorney or agent under 37 C.F.R. § 1.36(b) or 37 C.F.R. § 10.40 filed March 12, 2009.

The request is **NOT APPROVED**.

A review of the file record indicates that Customer No. #50855 does not have power of attorney in this patent application nor is there any statement or evidence of record of employment in or otherwise being engaged in the proceedings in this patent application. Accordingly, the request to withdraw under 37 C.F.R. § 1.36(b) is not applicable.

All future communications from the Office will continue to be directed to the below-listed address until otherwise properly notified by the applicant.

Telephone inquires concerning this decision should be directed to Michelle R. Eason at 571-272-4231.

Michelle R. Eason
Paralegal Specialist
Office of Petitions

cc: **CARTER, DELUCA, FARRELL & SCHMIDT, LLP**
445 BROAD HOLLOW ROAD
SUITE 420
MELVILLE, NY 11747

UNITED STATES PATENT AND TRADEMARK OFFICE

Commissioner for Patents
United States Patent and Trademark Office
P.O. Box 1450
Alexandria, VA 22313-1450
www.uspto.gov

COPY MAILED

APR 24 2009

OFFICE OF PETITIONS

CARTER, DELUCA, FARRELL & SCHMIDT, LLP
445 BROAD HOLLOW ROAD
SUITE 420
MELVILLE NY 11747

In re Application of	:	
TRANDARIR, Titi	:	
Application No. 11/796,340	:	DECISION ON PETITION
Filed: April 27, 2007	:	TO WITHDRAW
Attorney Docket No. **1429-36 CIP**	:	FROM RECORD
	:	

This is a decision on the renewed Request to Withdraw as attorney or agent of record under 37 C.F.R. § 1.36(b), filed April 09, 2009.

The request is **APPROVED**.

A grantable request to withdraw as attorney/agent of record must be signed by every attorney/agent seeking to withdraw or contain a clear indication that one attorney is signing on behalf of another/others. The Office requires the practitioner(s) requesting withdrawal to certify that he, she, or they have: (1) given reasonable notice to the client, prior to the expiration of the response period, that the practitioner(s) intends to withdraw from employment; (2) delivered to the client or a duly authorized representative of the client all papers and property (including funds) to which the client is entitled; and (3) notified the client of any responses that may be due and the time frame within which the client must respond, pursuant 37 CFR 10.40(c).

The request was signed by David M. Carter on behalf of all attorneys of record who are associated with customer No. 31554. All attorneys/agents associated have been withdrawn. Applicant is reminded that there is no attorney of record at this time.

The request to change the correspondence address of record is not acceptable as the requested correspondence address is not that of: (1) the first named signing inventor; or (2) an intervening assignee of the entire interest under 37 C.F.R 3.71. All future communications from the Office will be directed to the first named signing inventor.

Telephone inquiries concerning this decision should be directed to Michelle R. Eason at 571-272-4231.

Michelle R. Eason
Paralegal Specialist
Office of Petitions

cc: **TITI TRANDAFIR**
1101 JOSEPH CT.
S. PLAINFIELD, NJ 07080-2354

cc: **JUVENT, INC.**
300 ATRIUM DRIVE
SUITE 210
SOMERSET, NJ 08873

UNITED STATES PATENT AND TRADEMARK OFFICE

Commissioner for Patents
United States Patent and Trademark Office
P.O. Box 1450
Alexandria, VA 22313-1450
www.uspto.gov

PERKINS COIE LLP
P.O. BOX 2168
MENLO PARK CA 94026

COPY MAILED

JUL 3 1 2007

OFFICE OF PETITIONS

In re Application of	:	
Herbert G. Hart	:	
Application No. 11/796,350	:	DECISION ON PETITION
Filed: April 26, 2007	:	TO MAKE SPECIAL UNDER
Attorney Docket No. 59971-5001.US01	:	37 CFR 1.102(c)(1)
	:	

This is a decision on the petition under 37 CFR 1.102(c)(1), filed July 6, 2007, to make the above-identified application special based on applicant's age as set forth in M.P.E.P. § 708.02, Section IV.

The petition is **GRANTED**.

A grantable petition to make an application special under 37 CFR 1.102(c)(1) and MPEP § 708.02, Section IV: Applicant's Age must be accompanied by evidence showing that at least one of the applicants is 65 years of age, or more, such as a birth certificate or a statement by applicant. No fee is required

The instant petition includes a declaration statement signed by applicant. Accordingly, the above-identified application has been accorded "special" status.

Telephone inquiries concerning this decision should be directed to undersigned at 571-272-1642.

All other inquiries concerning either the examination or status of the application should be directed to the Technology Center.

The application is being referred back to the Office of Initial Patent Examination for processing. This application will be accorded "special" when pre-examination processing is done.

April M. Wise
Petitions Examiner
Office of Petitions

UNITED STATES PATENT AND TRADEMARK OFFICE

Commissioner for Patents
United States Patent and Trademark Office
P.O. Box 1450
Alexandria, VA 22313-1450
www.uspto.gov

TILLMAN WRIGHT, PLLC
P.O. BOX 471581
CHARLOTTE, NC 28247

COPY MAILED
NOV 26 2008

In re Application of	:	
Herbert G. HART	:	
Application No. 11/796,350	:	DECISION ON PETITION
Filed: April 26, 2007	:	
Attorney Docket No. 1706.502.01	:	

This is a decision on the petition under the unintentional provisions of 37 CFR 1.137(b), filed October 23, 2008, to revive the above-identified application.

The petition is **GRANTED**.

The above identified application became abandoned for failure to reply in a timely manner to the non-final Office action mailed April 16, 2008, which set a shortened statutory period for reply of three (3) months. No extensions of time under the provisions of 37 CFR 1.136(a) were obtained. Accordingly, the application became abandoned on July 16, 2008.

The petition satisfies the requirements of 37 CFR 1.137(b) in that petitioner has supplied (1) the reply in the form of an amendment, (2) the petition fee of $810 and (3) a proper statement of unintentional delay.

The Power of Attorney and Change of Correspondence Address filed October 23, 2008 is accepted.

An extension of time under 37 CFR 1.136 must be filed prior to the expiration of the maximum extendable period for reply. See In re Application of S., 8 USPQ2d 1630, 1631 (Comm'r Pats. 1988). Since the $555 extension of time fee submitted with the petition on October 23, 2008 was subsequent to the maximum extendable period for reply, this fee is unnecessary and petitioner may request a refund of this fee by writing to the following address: Mail Stop 16, Commissioner for Patents, P. O. Box 1450, Alexandria, VA 22313-1450. A copy of this decision should accompany petitioner's request.

It is not apparent whether the person signing the statement of unintentional delay was in a position to have firsthand or direct knowledge of the facts and circumstances of the delay at

issue. Nevertheless, such statement is being treated as having been made as the result of a reasonable inquiry into the facts and circumstances of such delay. See 37 CFR 10.18(b) and Changes to Patent Practice and Procedure; Final Rule Notice, 62 Fed. Reg. 53131, 53178 (October 10, 1997), 1203 Off. Gaz. Pat. Office 63, 103 (October 21, 1997). In the event that such an inquiry has not been made, petitioner must make such an inquiry. If such inquiry results in the discovery that it is not correct that the entire delay in filing the required reply from the due date for the reply until the filing of a grantable petition pursuant to 37 CFR 1.137(b) was unintentional, petitioner must notify the Office.

Telephone inquiries concerning this decision should be directed to Karin Reichle at (571) 272-6051.

This application is being referred to Technology Center AU 3723 for appropriate action by the Examiner in the normal course of business on the reply received October 23, 2008.

David Bucci
Petitions Examiner
Office of Petitions

UNITED STATES PATENT AND TRADEMARK OFFICE

Commissioner for Patents
United States Patent and Trademark Office
P.O. Box 1450
Alexandria, VA 22313-1450
www.uspto.gov

In re Application of
Herbert G. Hart

Application No. 11796350

Filed: April 26,2007

Attorney Docket No. 1706.502.01

:DECISION ON PETITION TO MAKE SPECIAL
:UNDER 37 CFR 1.102(c)(1)

This is a decision on the electronic petition under 37 CFR 1.102 (c)(1), filed 22-JAN-2009 to make the above-identified application special based on applicant's age as set forth in MPEP § 708.02, Section IV.

The petition is **GRANTED**.

A grantable petition to make an application special under 37 CFR 1.102(c)(1), MPEP § 708.02, Section IV: Applicant's Age must include a statement by applicant or a registered practitioner having evidence that applicant is at least 65 years of age. No fee is required.

Accordingly, the above-identified application has been accorded "special" status and will be taken up for action by the examiner upon the completion of all pre-examination processing.

Telephone inquiries concerning this electronic decision should be directed to the Electronic Business Center at 866-217-9197.

All other inquiries concerning either the examination or status of the application should be directed to the Technology Center.

UNITED STATES PATENT AND TRADEMARK OFFICE

Commissioner for Patents
United States Patent and Trademark Office
P.O. Box 1450
Alexandria, VA 22313-1450
www.uspto.gov

MAILED

APR 12 2010

OFFICE OF PETITIONS

MCCARTER & ENGLISH, LLP STAMFORD
CANTERBURY GREEN
201 BROAD STREET, 9TH FLOOR
STAMFORD CT 06901

In re Application of	:	
Richard C. Polivka et al.	:	
Application No. 11/796,379	:	DECISION ON PETITION
Filed: April 27, 2007	:	TO WITHDRAW
Attorney Docket No. ITI-492 (118001.16803)	:	FROM RECORD
	:	

This is a decision on the Request to Withdraw as attorney or agent of record under 37 C.F.R. § 1.36(b), filed February 1, 2010.

The request is **NOT APPROVED.**

The Office will no longer accept address changes to a new practitioner or law firm filed with a Request, absent the filing of a power of attorney to the new representative. The Office will either change the correspondence address of record to the most current address information provided for the assignee of the entire interest who properly became of record under 37 CFR 3.71 or, if no assignee of the entire interest has properly been made of record under 37 CFR 3.71, the most current address information provided for the first named inventor. This change has been made in order to avoid subsequent correspondence being directed to an incorrect address or to a practitioner who has not been appointed as practitioner of record by the applicant.

Accordingly, the request to withdraw from record cannot be approved because the request does not include a forwarding address. When filing a renewed request the address change should be that of : (1) the first named inventor; or (2) an assignee of the entire interest under 37 C.F.R 3.71, who has properly intervened.

The change of address provided on the request is not that of the current assignee of record.

All future communications from the Office will continue to be directed to the above-identified address until otherwise properly notified.

Telephone inquiries concerning this decision should be directed to the undersigned at 571-272-4618.

/Kimberly Inabinet/

Kimberly Inabinet
Petitions Examiner
Office of Petitions

UNITED STATES PATENT AND TRADEMARK OFFICE

Commissioner for Patents
United States Patent and Trademark Office
P.O. Box 1450
Alexandria, VA 22313-1450
www.uspto.gov

R. NEIL SUDOL
714 COLORADO AVENUE
BRIDGEPORT, CT 06605-1601

COPY MAILED

JUN 2 0 2008

OFFICE OF PETITIONS

In re Application of	:	
Peter T. WEBER, et al	:	
Application No. 11/796,474	:	DECISION ON PETITION
Filed: April 27, 2007	:	
Attorney Docket No. S45-008US	:	

This is a decision on the petition under the unintentional provisions of 37 CFR 1.137(b), filed February 14, 2008, to revive the above-identified application.

The petition is **GRANTED**.

The application became abandoned for failure to reply in a timely manner to the Notice to File Missing Parts of Nonprovisional Application (Notice), mailed May 31, 2007. The Notice set a period for reply of two (2) months from the mail date of the Notice. No extensions of time under the provisions of 37 CFR 1.136(a) were obtained. Accordingly, the application became abandoned on August 1, 2007.

The petition satisfies the requirements of 37 CFR 1.137(b) in that petitioner has supplied (1) the reply in the form of corrected drawings; (2) the petition fee of $770; and (3) an adequate statement of unintentional delay.

Telephone inquiries concerning this decision should be directed to Diane Goodwyn at (571)272-6735.

This application is being referred to the Office of Patent Application Processing for processing in the normal course of business on the reply received February 14, 2008.

Thurman Page
Petitions Examiner
Office of Petitions

UNITED STATES DEPARTMENT OF COMMERCE
Patent and Trademark Office
ASSISTANT SECRETARY OF COMMERCE AND
COMMISSIONER OF PATENTS AND TRADEMARKS
Washington, DC 20231

6/4/09

Patent No. :7474820
Inventor(s) :Alex Vayers et al.
Issued :1/6/2009
Title : Micro-Optic Adapters And Tips For Surgical Illumination Fibers
Atty.doc./File No.

Request for Certificates of Correction

Consideration has been given to your request for the issuance of a Certificate of Correction, for the above – identified patent under the provisions of CFR 1.322.

Inspection of the application for the patent reveals item [75], is printed in accordance with the record. Therefore being no fault on the Patent and Trademark Office, It has no authority to issue a certificate of correction under the provision of 1.322.

In view of the forgoing, your request in this matter, is hereby denied.

Future written correspondence concerning this matter should be filed and directed to Decisions & Certificates of Correction Branch.

Henry Randall
Decisions & Certificates
of Correction Branch
(703) 756-1571

CROCKETT & CROCKETT
26020 ACERO, SUITE 200
MISSION VIEJO, CA 92691

HR

UNITED STATES PATENT AND TRADEMARK OFFICE

Commissioner for Patents
United States Patent and Trademark Office
P.O. Box 1450
Alexandria, VA 22313-1450
www.uspto.gov

McDermott Will & Emery LLP
18191 Von Karman Avenue
Suite 500
Irvine, CA 92612-7108

COPY MAILED

AUG 01 2008

In re Application of	:	
Jay R. McCoy, et al.	:	
Application No. 11/796,502	:	DECISION ON PETITION
Filed: April 27, 2007	:	TO WITHDRAW
Attorney Docket No. 076960-0037	:	FROM RECORD
	:	

This is a decision on the Request to Withdraw as attorney or agent of record under 37 C.F.R. § 1.36(b), filed March 10, 2008.

The request is **NOT APPROVED** because it is moot.

A review of the file record indicates that the power of attorney to McDermott Will & Emery has been revoked by the assignee of the patent application on April 17, 2008. Accordingly, the request to withdraw under 37 C.F.R. § 1.36(b) is moot.

All future communications from the Office will continue to be directed to the below-listed address until otherwise notified by applicant.

Telephone inquires concerning this decision should be directed to Terri Williams at 571-272-2991.

Terri Williams
Petitions Examiner
Office of Petitions

cc: **Vista IP Law Group LLP**
2040 Main Street, 9th Floor
Irvine, CA 92614

UNITED STATES PATENT AND TRADEMARK OFFICE

UNITED STATES DEPARTMENT OF COMMERCE
United States Patent and Trademark Office
Address: COMMISSIONER FOR PATENTS
P.O. Box 1450
Alexandria, Virginia 22313-1450
www.uspto.gov

THE PROCTER & GAMBLE COMPANY
Global Legal Department - IP
Sycamore Building - 4th Floor
299 East Sixth Street
CINCINNATI, OH 45202

Mail Date: 04/21/2010

Applicant	: Luke R. Magee	: DECISION ON REQUEST FOR
Patent Number	: 7632257	: RECALCULATION of PATENT
Issue Date	: 12/15/2009	: TERM ADJUSTMENT IN VIEW
Appliction No	: 11/796,506	: OF WYETH AND NOTICE OF INTENT TO
Filed	: 04/27/2007	: ISSUE CERTIFICATE OF CORRECTION
		:

The Request for Recalculation is **GRANTED** to the extent indicated.

The patent term adjustment has been determined to be **0** days. The USPTO will *sua sponte* issue a certificate of correction reflecting the amount of PTA days determined by the recalculation.

Prior to the issuance of the certificate of correction, the USPTO will afford patentee an opportunity to be heard and request reconsideration. Accordingly, patentee has **one month or thirty (30) days**, whichever is longer, to file a request for reconsideration of this patent term adjustment calculation. See 35 U.S.C. 154(b)(3)(B)(ii) and 37 CFR 1.322(a)(4). No extensions of time will be granted under 37 CFR 1.136.

Patentee should use document code PET.OP if electronically filing a request for reconsideration of this patent term adjustment calculation. The patentee must also include the information required by 37 CFR 1.705(b)(2) and the fee required by 37 CFR 1.18(e). If patentee does not file a timely request for reconsideration of this patent term adjustment calculation including the information required by 37 CFR 1.705(b)(2) and the fee required by 37 CFR 1.18(e), the USPTO will issue a certificate of correction reflecting the PTA determination noted above.

Patentee should be aware that in order to preserve the right to review in the United States District Court for the District of Columbia of the USPTO patent term adjustment determination, patentee must ensure that he or she also take the steps required under 35 U.S.C. 154(b)(4)(A) in a timely manner. Nothing in the request for recalculation should be construed as providing an alternative time frame for commencing a civil action under 35 U.S.C. 154(b)(4)(A).

Any questions concerning this decision should be directed to the Office of Patent Legal Administration at 571-272-7702.

11 146 509

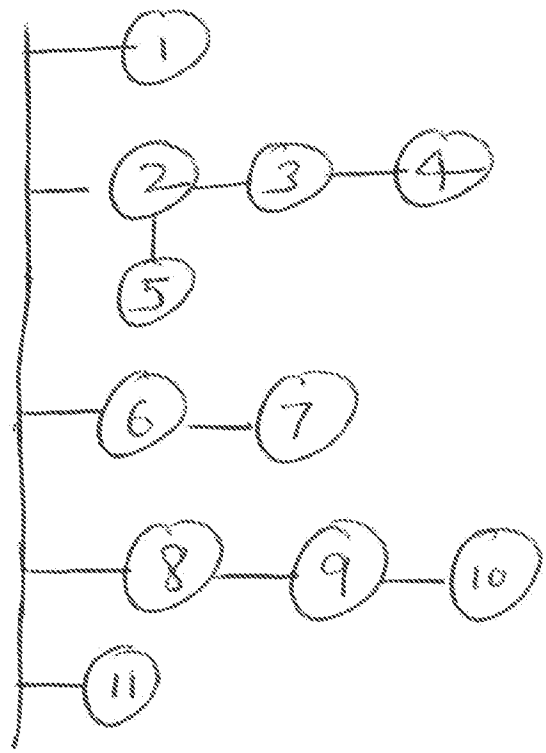

EAST Search History

EAST Search History (Prior Art)

Ref #	Hits	Search Query	DBs	Default Operator	Plurals	Time Stamp
L1	1383	206/494	US-PGPUB; USPAT; USOCR; FPRS; EPO; JPO; DERWENT	OR	ON	2009/07/04 10:11
L2	910	206/440	US-PGPUB; USPAT; USOCR; FPRS; EPO; JPO; DERWENT	OR	ON	2009/07/04 10:11
L3	541	206/776	US-PGPUB; USPAT; USOCR; FPRS; EPO; JPO; DERWENT	OR	ON	2009/07/04 10:11
L4	141	206/777	US-PGPUB; USPAT; USOCR; FPRS; EPO; JPO; DERWENT	OR	ON	2009/07/04 10:11
L5	183	206/778	US-PGPUB; USPAT; USOCR; FPRS; EPO; JPO; DERWENT	OR	ON	2009/07/04 10:11
L6	761	206/524.1	US-PGPUB; USPAT; USOCR; FPRS; EPO; JPO; DERWENT	OR	ON	2009/07/04 10:11
L7	713	206/812	US-PGPUB; USPAT; USOCR; FPRS; EPO; JPO; DERWENT	OR	ON	2009/07/04 10:12
L8	403	206/524.6	US-PGPUB; USPAT; USOCR; FPRS; EPO; JPO; DERWENT	OR	ON	2009/07/04 10:12
L9	1	5972473A	US-PGPUB; USPAT; USOCR; FPRS; EPO; JPO; DERWENT	OR	ON	2009/07/04 10:13
S1	2308	428/35.2	US-PGPUB; USPAT; USOCR; FPRS; EPO; JPO; DERWENT	OR	ON	2009/06/24 16:22

S2	4985119	matte layer	US-PGPUB; USPAT; USOCR; FPRS; EPO; JPO; DERWENT	OR	ON	2009/06/24 16:29

7/4/2009 10:32:24 AM
C:\Documents and Settings\rverma1\My Documents\EAST\Workspaces\packaged absorbent product translucent area.wsp

UNITED STATES PATENT AND TRADEMARK OFFICE

UNITED STATES DEPARTMENT OF COMMERCE
United States Patent and Trademark Office
Address: COMMISSIONER FOR PATENTS
P.O. Box 1450
Alexandria, Virginia 22313-1450
www.uspto.gov

APPLICATION NO.	FILING DATE	FIRST NAMED INVENTOR	ATTORNEY DOCKET NO.	CONFIRMATION NO.
11/796,514	04/27/2007	Todd Eugene Frank	64336 A US	4336

25212 7590 07/06/2009
DOW AGROSCIENCES LLC
9330 ZIONSVILLE RD
INDIANAPOLIS, IN 46268

EXAMINER
BUI, PHUONG T

ART UNIT	PAPER NUMBER
1638	

MAIL DATE	DELIVERY MODE
07/06/2009	PAPER

Please find below and/or attached an Office communication concerning this application or proceeding.

The time period for reply, if any, is set in the attached communication.

UNITED STATES PATENT AND TRADEMARK OFFICE

Commissioner for Patents
United States Patent and Trademark Office
P.O. Box 1450
Alexandria, VA 22313-1450
www.uspto.gov

JUL 0 6 2009

DOW AGROSCIENCES LLC
9330 ZIONSVILLE RD
INDIANAPOLIS IN 46268

In re Application of:	:
Todd Frank	:
Serial No.: 11/796,514	: PETITION DECISION
Filed: April 27, 2007	:
Attorney Docket No.: **64336 A US**	

This is in response to the petition under 37 CFR § 1.59(b), filed June 23, 2009, to expunge information from the above identified application. This application has not been allowed.

Petitioner requests that the Reply to Request for Information under 37 CFR 1.105, and attachment thereto, submitted to the Patent Office on June 23, 2009, be expunged from the record. Petitioner states either: (A) that the information contains trade secret material, proprietary material and/or material that is subject to a protective order which has not been made public; or (B) that the information submitted was unintentionally submitted and the failure to obtain its return would cause irreparable harm to the party who submitted the information or to the party in interest on whose behalf the information was submitted, and the information has not otherwise been made public. The petition fee set forth in 37 CFR § 1.17(g) has been paid.

This is an examined application which is currently under non-final rejection. As such the information provided has been reviewed, in part, but proceedings in the application have not been terminated. As stated in M.P.E.P. 724, upon allowance or other action closing prosecution in an application, petition may be made for return of Proprietary information. The information cannot be expunged at this time.

The petition is **DISMISSED**. Petitioner may resubmit the petition subsequent to a Notice of Allowability or *ex parte Quayle* action being mailed in the application. No additional petition fee will be required at that time.

Should there be any questions about this decision please contact Marianne C. Seidel by letter addressed to Director, TC 1600, at the address listed above, or by telephone at 571-272-0584 or by facsimile sent to the general Office facsimile number, 703-872-9306.

Marianne C. Seidel
Quality Assurance Specialist
Technology Center 1600

UNITED STATES PATENT AND TRADEMARK OFFICE

UNITED STATES DEPARTMENT OF COMMERCE
United States Patent and Trademark Office
Address: COMMISSIONER FOR PATENTS
P.O. Box 1450
Alexandria, Virginia 22313-1450
www.uspto.gov

APPLICATION NO.	FILING DATE	FIRST NAMED INVENTOR	ATTORNEY DOCKET NO.	CONFIRMATION NO.
11/796,514	04/27/2007	Todd Eugene Frank	64336 A US	4336

25212 7590 03/17/2010
DOW AGROSCIENCES LLC
9330 ZIONSVILLE RD
INDIANAPOLIS, IN 46268

EXAMINER
BUI, PHUONG T

ART UNIT	PAPER NUMBER
1638	

MAIL DATE	DELIVERY MODE
03/17/2010	PAPER

Please find below and/or attached an Office communication concerning this application or proceeding.

The time period for reply, if any, is set in the attached communication.

UNITED STATES PATENT AND TRADEMARK OFFICE

Commissioner for Patents
United States Patent and Trademark Office
P.O. Box 1450
Alexandria, VA 22313-1450
www.uspto.gov

MAR 1 7 2010

DOW AGROSCIENCES LLC
9330 ZIONSVILLE RD
INDIANAPOLIS IN 46268

In re Application of:
Todd Eugene Frank
Serial No.: 11/796,514
Filed: April 27, 2007
Attorney Docket No.: **64336 A US**

: PETITION DECISION

This is in response to the renewed petition under 37 CFR § 1.59(b), filed March 8, 2010, to expunge information from the above identified application. This application has been allowed.

Petitioner requests that Declaration under 37 CFR 1.132 submitted to the Patent Office on June 23, 2009 be expunged from the record. Petitioner states either: (A) that the information contains trade secret material, proprietary material and/or material that is subject to a protective order which has not been made public; or (B) that the information submitted was unintentionally submitted and the failure to obtain its return would cause irreparable harm to the party who submitted the information or to the party in interest on whose behalf the information was submitted, and the information has not otherwise been made public. The petition fee set forth in 37 CFR § 1.17(g) has been paid.

The reasons set forth in this petition establishes to the satisfaction of the Director that expungement of the information is appropriate. The file entry for this document has been closed and as such the document is no longer publicly available, which is the IFW equivalent to removal of a paper document from a paper file wrapper.

Therefore, petitioner's petition is GRANTED.

Should there be any questions about this decision please contact Marianne C. Seidel by letter addressed to Director, TC 1600, at the address listed above, or by telephone at 571-272-0584 or by facsimile sent to the general Office facsimile number, 703-872-9306.

Marianne C. Seidel
Quality Assurance Specialist
Technology Center 1600

SPE RESPONSE FOR CERTIFICATE OF CORRECTION

Paper No.: _____

DATE : 7/16/09

TO SPE OF : ART UNIT 2436 MOAZZAMI Nasser (Spe)

SUBJECT : Request for Certificate of Correction for Appl. No.: 11/796534 Patent No.: 7536013

Please respond to this request for a certificate of correction within 7 days.

FOR IFW FILES:

Please review the requested changes/corrections as shown in the **COCIN** document(s) in the IFW application image. No new matter should be introduced, nor should the scope or meaning of the claims be changed.

Please complete the response (see below) and forward the completed response to scanning using document code **COCX**.

FOR PAPER FILES:

Please review the requested changes/corrections as shown in the attached certificate of correction. Please complete this form (see below) and forward it with the file to:

Certificates of Correction Branch (CofC)
South Tower - 9A22
Palm Location 7580

Certificates of Correction Branch
703-308-9390 ext. _____

Thank You For Your Assistance

The request for issuing the above-identified correction(s) is hereby:
Note your decision on the appropriate box.

- ☒ **Approved** — **All** changes apply.
- ☐ **Approved in Part** — Specify below which changes **do not** apply.
- ☐ **Denied** — State the reasons for denial below.

Comments: _____

Nasser Moazzami — **SPE**

2436 — **Art Unit**

UNITED STATES PATENT AND TRADEMARK OFFICE

COMMISSIONER FOR PATENTS
UNITED STATES PATENT AND TRADEMARK OFFICE
P.O. BOX 1450
ALEXANDRIA, VA 22313-1450
WWW.USPTO.GOV

Paper No. None

SPRINKLE IP LAW GROUP
1301 W. 25TH STREET
SUITE 408
AUSTIN TX 78705

COPY MAILED

SEP 12 2007

OFFICE OF PETITIONS

In re Application of :
Ian McLean Pattison, Michael :
Edward Luna, and Roland Zink :
Application No. 11/796,572 :
Filed: April 27, 2007 : DECISION ON PETITION
Attorney Docket No. 724S1120-1 :
Title: CONTEXTUAL BASED :
IDENTITY :

This is in response to the petition pursuant to 37 C.F.R. § 1.47(a)[1], filed August 21, 2007.

On April 27, 2007, the application was filed, identifying Ian McLean Pattison, Michael Edward Luna, and Roland Zink as joint inventors. The application was deposited without an executed

---

1A grantable petition under 37 C.F.R. § 1.47(a) requires:
(1) the petition fee of $200;
(2) a surcharge of either $65 or $130 if the petition is not filed at the time of filing the application, as set forth in 37 C.F.R. § 1.16(e);
(3) a statement of the last known address of the non-signing inventors;
(4) either
a) proof that a copy of the entire application (specification, claims, drawings, and the oath or declaration) was sent or given to the non-signing inventor for review and proof that the non-signing inventor refuses to join in the application or
b) proof that the non-signing inventor cannot be found or reached after diligent effort, and;
(5) a declaration which complies with 37 C.F.R. § 1.63.

oath or declaration. On May 21, 2007, a "Notice to File Missing Parts of Nonprovisional Application - Filing Date Granted" (Notice) was mailed, requiring, *inter alia*, a fully executed oath or declaration and the associated surcharge. This Notice set a two-month period for reply.

Along with the present petition, Petitioner has submitted, *inter alia*, a portion of the petition fee, a declaration that has been executed by Messrs. Pattison and Zink and the surcharge associated with the late submission of the same, and a statement of facts. Petitioner has further submitted a one-month extension of time so as to make timely this response.

Regarding the petition fee, the remainder of the same has been charged to Petitioner's Deposit Account, as authorized in the petition.

Petitioner has met requirements (1) - (3) and (5) of Rule § 1.47(a).

Regarding the fourth requirement of Rule § 1.47(a), **it does not appear that a complete copy of the application was sent to the last-known address of each of the two non-signing inventors.** Where a refusal of the inventors to sign the application papers is alleged, the Office requires the petitioner to establish that a bona fide attempt was made to mail a complete copy of the application, which entails the specification, claims, drawings, and oath or declaration[2].

The Chief Financial Officer of the Assignee has set forth that he sent an electronic copy of the assignment document to non-signing inventor Luna[3]. No mention has been made of any presentation of the application to the non-signing joint inventor, and as such, the fourth requirement has not been met.

Petitioner has set forth that Mr. Luna indicated to Mr. Morrison that he would not sign "any other documents pertaining (sic) the Application[4]..."

However, it follows that since it has not been shown that a complete copy of the application was sent to the inventors, one cannot refuse to sign something which one has not seen. A refusal by an inventor to sign an oath or declaration when the inventor has not been presented with the application papers does

2 See MPEP § 409.03(d).
3 Morrison statement of facts, paragraph 5.
4 Id. at 8.

not itself suggest that the inventor is refusing to join the application unless it is clear that the inventor understands exactly what he or she is being asked to sign and refuses to accept the application papers. It is reasonable to require that the inventors be presented with the application papers before a petition under Rule § 1.47 is granted since such a procedure ensures that the inventor is apprised of the application to which the oath or declaration is directed[5].

Before filing the renewed petition, Petitioner should mail a complete copies of the application to the last known addresses[6] of non-signing joint inventors, and provide each of them with a reasonable period of time to respond. Petitioner should note that any statement that pertains to the presentation should be made by one having firsthand knowledge of the event. Statements based on hearsay are not normally accepted.

It follows that the present petition must be **DISMISSED**.

Any reply must be submitted within **TWO MONTHS** from the mail date of this decision. Extensions of time under 37 C.F.R. § 1.136(a) are permitted. The reply should include a cover letter entitled "Renewed Petition Under 37 C.F.R. § 1.47(a)". This is not a final agency action within the meaning of 5 U.S.C § 704.

The renewed petition should indicate in a prominent manner that the attorney handling this matter is Paul Shanoski, and may be submitted by mail[7], hand-delivery[8], or facsimile[9]. Registered users of EFS-Web may alternatively submit a response to this decision via EFS-Web[10].

If responding by mail, Petitioner is advised not to place the undersigned's name on the envelope. Only the information that appears in the footnote should be included - adding anything else to the address will delay the delivery of the response to the undersigned.

---

5 In re Gray, 115 USPQ 80 (Comm'r Pat. 1956).
6 The transmission of documents via Email, while a common practice, can be problematic. Transmission and receipt of documents-whether in image, word-processing, spreadsheet or other form-can be affected by differences in software generation between the sender and recipient(s), and other interferences include but are not limited to sender's and recipient's Internet service provider's (ISP) and/or office/personal security firewall systems.
7 Mail Stop Petition, Commissioner for Patents, United States Patent and Trademark Office, P.O. Box 1450, Alexandria, VA, 22313-1450.
8 Customer Window, Randolph Building, 401 Dulaney Street, Alexandria, VA, 22314.
9 (571) 273-8300- please note this is a central facsimile number.
10 https://sportal.uspto.gov/authenticate/authenticateuserlocalepf.html

Telephone inquiries **regarding this decision** should be directed to the undersigned at (571) 272-3225[11]. All other inquiries concerning examination procedures or status of the application should be directed to the Technology Center.

Paul Shanoski
Senior Attorney
Office of Petitions
United States Patent and Trademark Office

---

11 Petitioner will note that all practice before the Office should be in writing, and the action of the Office will be based exclusively on the written record in the Office. See 37 C.F.R. § 1.2. As such, Petitioner is reminded that no telephone discussion may be controlling or considered authority for any further action(s) of Petitioner.

UNITED STATES PATENT AND TRADEMARK OFFICE

COMMISSIONER FOR PATENTS
UNITED STATES PATENT AND TRADEMARK OFFICE
P.O. BOX 1450
ALEXANDRIA, VA 22313-1450
WWW.USPTO.GOV

Paper No.

SPRINKLE IP LAW GROUP
1301 W. 25TH STREET
SUITE 408
AUSTIN TX 78705

COPY MAILED
JAN 22 2008
OFFICE OF PETITIONS

In re Application of	:	
Ian McLean Pattison, Michael	:	
Edward Luna, and Roland Zink	:	
Application No. 11/796,572	:	DECISION ON RENEWED
Filed: April 27, 2007	:	PETITION PURSUANT TO
Attorney Docket No. 724S1120-1	:	37 C.F.R. § 1.47(A)
Title: CONTEXTUAL BASED	:	
IDENTITY	:	

This is in response to the renewed petition pursuant to 37 C.F.R. § 1.47(a)[1], filed December 21, 2007.

This renewed petition is **DISMISSED**.

1A grantable petition under 37 C.F.R. § 1.47(a) requires:

(1) the petition fee of $200;
(2) a surcharge of either $65 or $130 if the petition is not filed at the time of filing the application, as set forth in 37 C.F.R. § 1.16(e);
(3) a statement of the last known address of the non-signing inventors;
(4) either
  a) proof that a copy of the entire application (specification, claims, drawings, and the oath or declaration) was sent or given to the non-signing inventor for review and proof that the non-signing inventor refuses to join in the application or
  b) proof that the non-signing inventor cannot be found or reached after diligent effort, and;
(5) a declaration which complies with 37 C.F.R. § 1.63.

On April 27, 2007, the application was filed, identifying Ian McLean Pattison, Michael Edward Luna, and Roland Zink as joint inventors. The application was deposited without an executed oath or declaration. On May 21, 2007, a "Notice to File Missing Parts of Nonprovisional Application - Filing Date Granted" (Notice) was mailed, requiring, *inter alia*, a fully executed oath or declaration and the associated surcharge. This Notice set a two-month period for reply.

An original petition was filed on August 21, 2007, and was dismissed via the mailing of a decision on September 12, 2007, for failing to meet the fourth requirement of Rule § 1.47(a).

With this renewed petition, Petitioner has submitted a two-month extension of time so as to make timely this response. Petitioner has also submitted a declaration that has been executed by formerly non-signing joint inventor Luna. However, joinder has not been achieved, as this declaration cannot be accepted, due to the fact that it contains a non-initialed and non-dated change by inventor Luna[2].

Moreover, this inventor has indicated that his last name is not Luna, but rather "Smith-Luna." Consequently, it appears that a petition pursuant to 37 C.F.R. § 1.182 will be required along with a second renewed petition pursuant to Rule § 1.47(a) so that the name of this inventor can be changed in Office records - Petitioner is reminded that pursuant to Rule § 1.48(f)(1), inventorship is set upon the first filing of a declaration that has been executed by any of the inventors.

Any reply must be submitted within **TWO MONTHS** from the mail date of this decision. Extensions of time under 37 C.F.R. § 1.136(a) are permitted. The reply should include a cover letter entitled "Second Renewed Petition Under 37 C.F.R. § 1.47(a)". This is not a final agency action within the meaning of 5 U.S.C § 704.

The renewed petition should indicate in a prominent manner that the attorney handling this matter is Paul Shanoski, and may be submitted by mail[3], hand-delivery[4], or facsimile[5]. Registered users of EFS-Web may alternatively submit a response to this decision via EFS-Web[6].

---

2 See 37 C.F.R. § 1.52(c)(1) and MPEP § 605.04(a).
3 Mail Stop Petition, Commissioner for Patents, United States Patent and Trademark Office, P.O. Box 1450, Alexandria, VA, 22313-1450.
4 Customer Window, Randolph Building, 401 Dulaney Street, Alexandria, VA, 22314.
5 (571) 273-8300- please note this is a central facsimile number.
6 https://sportal.uspto.gov/authenticate/authenticateuserlocalepf.html

If responding by mail, Petitioner is advised not to place the undersigned's name on the envelope. Only the information that appears in the footnote should be included - adding anything else to the address will delay the delivery of the response to the undersigned.

Telephone inquiries **regarding this decision** should be directed to the undersigned at (571) 272-3225[7]. All other inquiries concerning examination procedures or status of the application should be directed to the Technology Center.

/Paul Shanoski/
Paul Shanoski
Senior Attorney
Office of Petitions

---

7 Petitioner will note that all practice before the Office should be in writing, and the action of the Office will be based exclusively on the written record in the Office. See 37 C.F.R. § 1.2. As such, Petitioner is reminded that no telephone discussion may be controlling or considered authority for any further action(s) of Petitioner.

UNITED STATES PATENT AND TRADEMARK OFFICE

Commissioner for Patents
United States Patent and Trademark Office
P.O. Box 1450
Alexandria, VA 22313-1450
www.uspto.gov

Paper No.

SPRINKLE IP LAW GROUP
1301 W. 25TH STREET
SUITE 408
AUSTIN TX 78705

COPY MAILED

APR 1 1 2008

OFFICE OF PETITIONS

In re Application of	:	
Ian McLean Pattison, Michael	:	DECISION ON SECOND RENEWED
Edward Luna, and Roland Zink	:	PETITION PURSUANT TO
Application No. 11/796,572	:	37 C.F.R. § 1.47(A) AND
Filed: April 27, 2007	:	PETITION PURSUANT TO
Attorney Docket No. 724S1120-1	:	37 C.F.R. § 1.182
Title: CONTEXTUAL BASED	:	
IDENTITY	:	

This is in response to the second renewed petition pursuant to 37 C.F.R. § 1.47(a) and the petition pursuant to 37 C.F.R. § 1.182, both filed concurrently on March 24, 2008.

The second renewed petition pursuant to 37 C.F.R. § 1.47(a) is **DISMISSED AS MOOT**.

The petition pursuant to 37 C.F.R. § 1.182 is **GRANTED**.

On April 27, 2007, the application was filed, identifying Ian McLean Pattison, Michael Edward Luna, and Roland Zink as joint inventors. The application was deposited without an executed oath or declaration. On May 21, 2007, a "Notice to File Missing Parts of Nonprovisional Application - Filing Date Granted" (Notice) was mailed, requiring, *inter alia*, a fully executed oath or declaration and the associated surcharge. This Notice set a two-month period for reply.

A grantable petition pursuant to 37 C.F.R. § 1.47(a) requires:

(1) the petition fee of $200;

(2) a surcharge of either $65 or $130 if the petition is not filed at the time of filing the application, as set forth in 37 C.F.R. § 1.16(e);
(3) a statement of the last known address of the non-signing inventors;
(4) either
  a) proof that a copy of the entire application (specification, claims, drawings, and the oath or declaration) was sent or given to the non-signing inventor for review and proof that the non-signing inventor refuses to join in the application or
  b) proof that the non-signing inventor cannot be found or reached after diligent effort, and;
(5) a declaration which complies with 37 C.F.R. § 1.63.

An original petition pursuant to Rule 1.47(a) was filed on August 21, 2007, and was dismissed via the mailing of a decision on September 12, 2007, for failing to meet the fourth requirement of Rule 1.47(a). A renewed petition pursuant to Rule 1.47(a) was filed December 21, 2007 along with a two-month extension of time so as to make timely this response, and was dismissed via the mailing of a decision on January 22, 2008. The decision set forth, *in pertinent part*:

> Petitioner has also submitted a declaration that has been executed by formerly non-signing joint inventor Luna. However, joinder has not been achieved, as this declaration cannot be accepted, due to the fact that it contains a non-initialed and non-dated change by inventor Luna[1].
>
> Moreover, this inventor has indicated that his last name is not Luna, but rather "Smith-Luna." Consequently, it appears that a petition pursuant to 37 C.F.R. § 1.182 will be required along with a second renewed petition pursuant to Rule § 1.47(a) so that the name of this inventor can be changed in Office records - Petitioner is reminded that pursuant to Rule § 1.48(f)(1), inventorship is set upon the first filing of a declaration that has been executed by any of the inventors.

<u>The petition pursuant to 37 C.F.R. § 1.182</u>:

The fee that is associated with the filing of this petition will be charged to Petitioner's Deposit Account in due course.

---

1 <u>See</u> 37 C.F.R. § 1.52(c)(1) and MPEP § 605.04(a).

With this petition, Petitioner has submitted a statement of facts from a paralegal which indicates that the declaration that was submitted on filing contains an error: 'Michael Edward Luna" should have been listed as "Michael Edward Smith Luna." Petitioner has also included a statement of facts from Mr. Luna that confirms that his name is "Michael Edward Smith Luna."

Office records have been updated to reflect that this joint inventor is correctly listed as "Michael Edward Smith Luna."

The second petition pursuant to 37 C.F.R. § 1.47(a):

With this second renewed petition, Petitioner has included a declaration that has been executed by each of the three inventors.

As such, the second renewed petition is **DISMISSED AS MOOT**.

In view of the joinder of the joint inventor, further consideration under 37 C.F.R. § 1.47(a) is not necessary and the petition is considered moot. This application does not have any Rule 1.47(a) status and no such status should appear on the file wrapper. This application need not be returned to this Office for further consideration under 37 C.F.R. § 1.47(a).

The Office of Patent Application Processing (OPAP) will be notified of this decision so that the application may receive further processing.

The general phone number for OPAP is 571-272-4000. Telephone inquiries **regarding this decision** should be directed to the undersigned at (571) 272-3225[2]..

/Paul Shanoski/
Paul Shanoski
Senior Attorney
Office of Petitions

---

2 Petitioner will note that all practice before the Office should be in writing, and the action of the Office will be based exclusively on the written record in the Office. See 37 C.F.R. § 1.2. As such, Petitioner is reminded that no telephone discussion may be controlling or considered authority for any further action(s) of Petitioner.

UNITED STATES PATENT AND TRADEMARK OFFICE

Commissioner for Patents
United States Patent and Trademark Office
P.O. Box 1450
Alexandria, VA 22313-1450
www.uspto.gov
DIW Apr-08

RICHARD D. CLARKE
LAW OFFICE OF RICHARD D. CLARKE
3755 AVOCADO BLVD., #1000
LA MESA CA 91941-7301

COPY MAILED

APR 2 2 2008

OFFICE OF PETITIONS

In re Application of Weinstein and Eulmi Application Number: 11/796593 Filing Date: 04/28/2007 Attorney Docket Number: 07-ARF/106	:	DECISION REFUSING STATUS UNDER 37 CFR 1.47(a)

This is in response to the petition under 37 CFR 1.47(a) filed on September 7, 2007.

The petition is **DISMISSED**.

Rule 47 applicant is given TWO MONTHS from the mailing date of this decision to reply, correcting the below-noted deficiencies. Any reply should be entitled "Request for Reconsideration of Petition Under 37 CFR 1.47(a)," and should only address the deficiencies noted below, except that the reply may include an oath or declaration executed by the non-signing inventor. **FAILURE TO RESPOND WILL RESULT IN ABANDONMENT OF THE APPLICATION.** Extensions of time may be obtained in accordance with 37 CFR 1.136(a).

The above-identified application was filed on April 28, 2007, without an executed oath or declaration.

Accordingly, on June 4, 2007, a Notice to File Missing Parts of Nonprovisional Application was mailed, requiring an executed oath or declaration, and a surcharge for its late filing.

In response, on September 7, 2007 (certificate of mailing date September 4, 2007), a declaration naming Eliahu Weinstein and Sam H. Eulmi as joint inventors, signed by joint inventor Eulmi on behalf of himself and non-signing joint inventor Weinstein was filed, along with the present petition and fee, and a one (1) month extension of time.

Petitioners assert that the papers were sent to the non-signing inventor by email. Subsequently, the non-signing inventor sent a return email to petitioner's counsel. A copy of the email is included.

A grantable petition under 37 CFR 1.47(a) requires:

(1) proof that the non-signing inventor cannot be reached or located, notwithstanding diligent effort, or refuses to sign the oath or declaration after having been presented with the application papers (specification, claims and drawings);

(2) an acceptable oath or declaration in compliance with 35 U.S.C. §§ 115 and 116;

(3) the petition fee;

(4) a surcharge of $130 or $65 (small entity) if the petition and/or declaration is not filed at the time of filing the application, and

(5) a statement of the last known address of the non-signing inventor.

The petition lacks item (1).

The petition must be dismissed because sufficient proof has not been provided that the inventor received the application papers. With regard to the mailing by certified mail, the showing of record is that the papers were not received by the non-signing inventor, but by another individual, and it is unclear whether the non-signing inventor ever received the application.

In this regard, a copy of the application papers should be sent to the **last known address** of the non-signing inventor, or, if the non-signing inventor is represented by counsel, to the address of the non-signing inventor's attorney.[1]

Furthermore, with regard to the sending of the documents by email, the transmission of documents via Email, while a common practice, can be problematic. Transmission and receipt of documents-whether in image, word-processing, spreadsheet or other form-can be effected by differences in software generation between the sender and recipient(s), and other interferences include but are not limited to sender's and recipient's Internet service provider's (ISP) and/or office/personal security firewall systems.

Thus, in the absence of an express statement from a non-signing inventor(s) that he/she/they have received, opened and read a

[1] MPEP 409.03(d)(II).

document, unlike a printed page in the language of the recipient there is as of this writing no basis to presume that an Emailed document was in a form that can be read and comprehended.

It is further noted that the reply email from the non-signing inventor states "**You never sent me anything to let me know you filed and what you filed in my behalf.**" (emphasis in original) This statement suggests that the non-signing inventor may not have received or been able to read the emailed documents.

Petitioners may show proof that a copy of the application was sent or given to the non-signing inventor for review by providing a copy of the cover letter transmitting the application papers (specification, including claims, drawings, if any, and the declaration) to the non-signing inventor or details given in an affidavit or declaration of facts by a person having first-hand knowledge of the details.

Likewise, before a *bona fide* refusal to sign the declaration can be alleged, petitioners must show that a copy of the application was sent or given to the inventor. If the inventor refuses in writing, petitioners must submit a copy of that written refusal with any renewed petition. If the refusal was made orally to a person, then that person must provide details of the refusal in an affidavit or declaration of fact.

If an inventor(s) cannot be reached at his or her last known address, petitioners must provide details, in an affidavit or declaration of facts by a person with first hand knowledge of the details, of the efforts, such as Internet, e-mail, or telephone directory searches, which have been undertaken to locate that inventor, send or give a copy of the application papers to him or her, and request that he or she sign and return the declaration.

If repeated attempts to contact an inventor(s) by telephone, mail, and e-mail, are unsuccessful, petitioners will have established that an inventor(s) cannot be found despite diligent efforts.

Further correspondence with respect to this matter should be addressed as follows:

By mail: Mail Stop Petition
Commissioner for Patents
P.O. Box 1450
Alexandria, VA 22313-1450

By FAX: (571) 273-8300
Attn: Office of Petitions

By hand: Customer Service Window
Mail Stop Petition
Randolph Building
401 Dulany Street
Alexandria, VA 22314

Telephone inquiries related to this decision should be directed to the undersigned at 571-272-3231.

D Wood

Douglas I. Wood
Senior Petitions Attorney
Office of Petitions

UNITED STATES PATENT AND TRADEMARK OFFICE

UNITED STATES DEPARTMENT OF COMMERCE
United States Patent and Trademark Office
Address: COMMISSIONER FOR PATENTS
P.O. Box 1450
Alexandria, Virginia 22313-1450
www.uspto.gov

APPLICATION NO.	FILING DATE	FIRST NAMED INVENTOR	ATTORNEY DOCKET NO.	CONFIRMATION NO.
11/796,595	04/27/2007	Thomas Conrad Mack	64337 A US	3936

25212 7590 02/06/2009
DOW AGROSCIENCES LLC
9330 ZIONSVILLE RD
INDIANAPOLIS, IN 46268

EXAMINER
IBRAHIM, MEDINA AHMED

ART UNIT	PAPER NUMBER
1638	

MAIL DATE	DELIVERY MODE
02/06/2009	PAPER

Please find below and/or attached an Office communication concerning this application or proceeding.

The time period for reply, if any, is set in the attached communication.

UNITED STATES PATENT AND TRADEMARK OFFICE

Commissioner for Patents
United States Patent and Trademark Office
P.O. Box 1450
Alexandria, VA 22313-1450
www.uspto.gov

DOW AGROSCIENCES LLC
9330 ZIONSVILLE RD
INDIANAPOLIS IN 46268

FEB 0 6 2009

In re Application of:
Mack et al.
Serial No.: 11/796,595
Filed: April 27, 2007
Attorney Docket No.: **64337 A US**

: PETITION DECISION

This is in response to the petition under 37 CFR § 1.59(b), filed January 30, 2009, to expunge information from the above identified application. This application has not been allowed.

Petitioner requests that Declaration submitted to the Patent Office on January 30, 2009, be expunged from the record. Petitioner states either: (A) that the information contains trade secret material, proprietary material and/or material that is subject to a protective order which has not been made public; or (B) that the information submitted was unintentionally submitted and the failure to obtain its return would cause irreparable harm to the party who submitted the information or to the party in interest on whose behalf the information was submitted, and the information has not otherwise been made public. The petition fee set forth in 37 CFR § 1.17(g) has been paid.

This is an examined application which is currently under non-final rejection. As such the information provided has been reviewed, in part, but proceedings in the application have not been terminated. As stated in M.P.E.P. 724, upon allowance or other action closing prosecution in an application, petition may be made for return of Proprietary information. The information cannot be expunged at this time.

The petition is **DISMISSED**. Petitioner may resubmit the petition subsequent to a Notice of Allowability or *ex parte Quayle* action being mailed in the application. No additional petition fee will be required at that time.

Should there be any questions about this decision please contact Marianne C. Seidel by letter addressed to Director, TC 1600, at the address listed above, or by telephone at 571-272-0584 or by facsimile sent to the general Office facsimile number, 703-872-9306.

Marianne C. Seidel
Quality Assurance Specialist
Technology Center 1600

UNITED STATES PATENT AND TRADEMARK OFFICE

UNITED STATES DEPARTMENT OF COMMERCE
United States Patent and Trademark Office
Address: COMMISSIONER FOR PATENTS
P.O. Box 1450
Alexandria, Virginia 22313-1450
www.uspto.gov

APPLICATION NO.	FILING DATE	FIRST NAMED INVENTOR	ATTORNEY DOCKET NO.	CONFIRMATION NO.
11/796,595	04/27/2007	Thomas Conrad Mack	64337 A US	3936

25212 7590 11/09/2009
DOW AGROSCIENCES LLC
9330 ZIONSVILLE RD
INDIANAPOLIS, IN 46268

EXAMINER
IBRAHIM, MEDINA AHMED

ART UNIT	PAPER NUMBER
1638	

MAIL DATE	DELIVERY MODE
11/09/2009	PAPER

Please find below and/or attached an Office communication concerning this application or proceeding.

The time period for reply, if any, is set in the attached communication.

UNITED STATES PATENT AND TRADEMARK OFFICE

Commissioner for Patents
United States Patent and Trademark Office
P.O. Box 1450
Alexandria, VA 22313-1450
www.uspto.gov

NOV 03 2009

DOW AGROSCIENCES LLC
9330 ZIONSVILLE RD
INDIANAPOLIS IN 46268

In re Application of:	:
Thomas Conrad Mack	: PETITION DECISION
Serial No.: 11/796,595	:
Filed: April 27, 2007	:
Attorney Docket No.: **64337 A US**	

This is in response to the renewed petition under 37 CFR § 1.59(b), filed October 26, 2009, to expunge information from the above identified application. This application has been allowed.

Petitioner requests that the Declaration submitted to the Patent Office on January 30, 2009 be expunged from the record. Petitioner states either: (A) that the information contains trade secret material, proprietary material and/or material that is subject to a protective order which has not been made public; or (B) that the information submitted was unintentionally submitted and the failure to obtain its return would cause irreparable harm to the party who submitted the information or to the party in interest on whose behalf the information was submitted, and the information has not otherwise been made public. The petition fee set forth in 37 CFR § 1.17(g) has been paid.

The reasons set forth in this petition establishes to the satisfaction of the Director that expungement of the information is appropriate. The file entry for this document has been closed and as such the document is no longer publicly available, which is the IFW equivalent to removal of a paper document from a paper file wrapper.

Therefore, petitioner's petition is GRANTED.

Should there be any questions about this decision please contact Marianne C. Seidel by letter addressed to Director, TC 1600, at the address listed above, or by telephone at 571-272-0584 or by facsimile sent to the general Office facsimile number, 703-872-9306.

Marianne C. Seidel
Quality Assurance Specialist
Technology Center 1600

UNITED STATES PATENT AND TRADEMARK OFFICE

UNITED STATES DEPARTMENT OF COMMERCE
United States Patent and Trademark Office
Address: COMMISSIONER FOR PATENTS
P.O. Box 1450
Alexandria, Virginia 22313-1450
www.uspto.gov

DOW AGROSCIENCES LLC
9330 ZIONSVILLE RD
INDIANAPOLIS, IN 46268

Mail Date: 04/21/2010

Applicant	: Thomas Conrad Mack	: DECISION ON REQUEST FOR
Patent Number	: 7635806	: RECALCULATION of PATENT
Issue Date	: 12/22/2009	: TERM ADJUSTMENT IN VIEW
Appliction No	: 11/796,595	: OF WYETH AND NOTICE OF INTENT TO
Filed	: 04/27/2007	: ISSUE CERTIFICATE OF CORRECTION
		:

The Request for Recalculation is **GRANTED** to the extent indicated.

The patent term adjustment has been determined to be **12** days. The USPTO will *sua sponte* issue a certificate of correction reflecting the amount of PTA days determined by the recalculation.

Prior to the issuance of the certificate of correction, the USPTO will afford patentee an opportunity to be heard and request reconsideration. Accordingly, patentee has **one month or thirty (30) days**, whichever is longer, to file a request for reconsideration of this patent term adjustment calculation. See 35 U.S.C. 154(b)(3)(B)(ii) and 37 CFR 1.322(a)(4). No extensions of time will be granted under 37 CFR 1.136.

Patentee should use document code PET.OP if electronically filing a request for reconsideration of this patent term adjustment calculation. The patentee must also include the information required by 37 CFR 1.705(b)(2) and the fee required by 37 CFR 1.18(e). If patentee does not file a timely request for reconsideration of this patent term adjustment calculation including the information required by 37 CFR 1.705(b)(2) and the fee required by 37 CFR 1.18(e), the USPTO will issue a certificate of correction reflecting the PTA determination noted above.

Patentee should be aware that in order to preserve the right to review in the United States District Court for the District of Columbia of the USPTO patent term adjustment determination, patentee must ensure that he or she also take the steps required under 35 U.S.C. 154(b)(4)(A) in a timely manner. Nothing in the request for recalculation should be construed as providing an alternative time frame for commencing a civil action under 35 U.S.C. 154(b)(4)(A).

Any questions concerning this decision should be directed to the Office of Patent Legal Administration at 571-272-7702.

UNITED STATES PATENT AND TRADEMARK OFFICE

UNITED STATES DEPARTMENT OF COMMERCE
United States Patent and Trademark Office
Address: COMMISSIONER FOR PATENTS
P.O. Box 1450
Alexandria, Virginia 22313-1450
www.uspto.gov

APPLICATION NO.	FILING DATE	FIRST NAMED INVENTOR	ATTORNEY DOCKET NO.	CONFIRMATION NO.
11/796,602	04/27/2007	Robert Alan Brannen	KM2111.012A	2072

20995 7590 01/02/2009
KNOBBE MARTENS OLSON & BEAR LLP
2040 MAIN STREET
FOURTEENTH FLOOR
IRVINE, CA 92614

EXAMINER
BENSON, WALTER

ART UNIT	PAPER NUMBER
2837	

NOTIFICATION DATE	DELIVERY MODE
01/02/2009	ELECTRONIC

Please find below and/or attached an Office communication concerning this application or proceeding.

The time period for reply, if any, is set in the attached communication.

Notice of the Office communication was sent electronically on above-indicated "Notification Date" to the following e-mail address(es):

jcartee@kmob.com
eOAPilot@kmob.com

UNITED STATES PATENT AND TRADEMARK OFFICE

Commissioner for Patents
United States Patent and Trademark Office
P.O. Box 1450
Alexandria, VA 22313-1450
www.uspto.gov

Date Mailed: January 2, 2009

KNOBBE MARTENS OLSON & BEAR LLP
2040 MAIN STREET
FOURTEENTH FLOOR
IRVINE CA 92614

Applicant: Brannen et al.
Appl. No.: 11/796,602
Filing Date: April 27, 2007
Title: DC MOTOR VARIABLE KICK-START
Attorney Docket No.: KM2111.012A
Pub. No.: US 2008/0265811 A1
Pub. Date: October 30, 2008

This is a decision on the request for republication of patent application publication under 37 CFR 1.221(a), filed on December 30, 2008, for the above-identified application.

The request under 37 CFR 1.221(a) is DISMISSED.

37 CFR 1.221(a) requires "a copy of the application in compliance with the Office electronic filing system requirements and be accompanied by the publication fee set forth in § 1.18(d) and the processing fee set forth in § 1.17(i)". If the request for republication does not comply with the electronic filing system requirements, the republication will not take place and the publication fee set forth in § 1.18(d) will be refunded. The processing fee will be retained.

The applicant did not supply a copy of the application in compliance with the Office electronic filing system, as required by 37 CFR 1.221(a) because **the Applicant submitted the papers as a "Document for an existing application", which are entered into the application file, and not as a "Pre-Grant Publication" submission**. In addition, the applicant did not provide a copy of the application. The request for republication does not comply with the electronic filing system requirements, thus republication will not take place.

Any request for republication under 37 CFR 1.221(a), must be submitted via the EFS system, **as a Pre-Grant publication submission.** The applicant is directed to the following website for additional instructions on how to submit a Pre-Grant Publication submission via the electronic filing system:

http://www.uspto.gov/ebc/portal/efs/pgpub_quickstart.pdf

Any questions or requests for reconsideration of the decision should be addressed as follows:

By mail to: Mail Stop PGPUB
Commissioner for Patents
P.O. Box 1450
Alexandria, Va. 22313-1450

By facsimile: 571-273-8300

Telephone inquiries regarding this correspondence should be directed to The Office of Data Management at 571-272-4200.

Tammy J. Koontz
Program & Management Analyst
Office of Data Management

Adjustment date: 01/05/2009 KKING1
12/31/2008 INTEFSW 00004102 11796602
01 FC:1504 -300.00 OP

Refund Ref:
01/05/2009 0030065241

Credit Card Refund Total: $300.00

Master C: XXXXXXXXXXXX5583

UNITED STATES PATENT AND TRADEMARK OFFICE

Commissioner for Patents
United States Patent and Trademark Office
P.O. Box 1450
Alexandria, VA 22313-1450
www.uspto.gov

ROPES & GRAY LLP
PATENT DOCKETING 39/41
ONE INTERNATIONAL PLACE
BOSTON, MA 02110-2624

COPY MAILED
JUN 17 2009
OFFICE OF PETITIONS

In re Application of Gjorstrup :
Application No. 11/796,611 : Decision on Petition
Filing Date: April 27, 2007 :
Attorney Docket No. 103848-0003-101 :

This is a decision on the petition under 37 CFR 1.181 filed April 14, 2009, requesting the Office withdraw the holding of abandonment.

The petition is **granted**.

Facts

The Office mailed a non-final Office action on July 9, 2008. The Office action set a shortened statutory period for reply of three months.

A reply, Information Disclosure Statement, request for a three-month extension of time and other papers were filed January 13, 2008, along with a Certificate of Mailing dated January 9, 2009.

The reply, in the form of a thirteen-page amendment, was inadvertently scanned into the Office's Image File Wrapper as part of the documents submitted with the IDS. As a result, the Office failed to recognize the amendment had been filed and mailed a Notice of Abandonment on March 30, 2009.

The instant petition was filed April 14, 2009, and requests withdrawal of the holding of abandonment.

Discussion

A review of the record indicates a timely reply was filed in response to the July 9, 2008 Office action. Therefore, the Notice of Abandonment is hereby vacated and the holding of abandonment withdrawn.

Technology Center Art Unit 1617 will be informed of the instant decision and the application, including the amendment filed January 13, 2009, will be further examined in due course.

Telephone inquiries regarding this communication should be directed to Petitions Attorney Steven Brantley at (571) 272-3203.

Charles Steven Brantley
Senior Petitions Attorney
Office of Petitions

UNITED STATES PATENT AND TRADEMARK OFFICE

Commissioner for Patents
United States Patent and Trademark Office
P.O. Box 1450
Alexandria, VA 22313-1450
www.uspto.gov

DORITY & MANNING, P.A.
POST OFFICE BOX 1449
GREENVILLE SC 29602-1449

COPY MAILED

DEC 12 2007

OFFICE OF PETITIONS

In re Application of	:	
Wenzel, et al.	:	DECISION REFUSING STATUS
Application No. 11/796,615	:	UNDER 37 CFR 1.47(a)
Filed: April 27, 2007	:	
Attorney Docket No. KCX-1132-CIP	:	
(64126564US01)		

This is in response to the petition under 37 CFR 1.47(a), filed September 25, 2007.

The petition is **DISMISSED**.

Rule 47 applicant is given TWO (2) MONTHS from the mailing date of this decision to reply, correcting the below-noted deficiencies. Any reply should be entitled "Request for Reconsideration of Petition Under 37 CFR 1.47(a)," and should only address the deficiencies noted below, except that the reply may include an oath or declaration executed by the non-signing inventor. **FAILURE TO RESPOND WILL RESULT IN ABANDONMENT OF THE APPLICATION.** Any extensions of time will be governed by 37 CFR 1.136(a).

A grantable petition under 37 CFR 1.47(a) requires: (1) proof that the non-signing inventor cannot be reached or refuses to sign the oath or declaration after having been presented with the application papers (specification, claims and drawings); (2) an acceptable oath or declaration in compliance with 35 U.S.C. §§ 115 and 116; (3) the petition fee; and (4) a statement of the last known address of the non-signing inventor. Applicants lack item (1) set forth above.

As to item (1), Applicants failed to establish that Mr. Ribble and Ms. Stahl have constructively refused to sign the declaration. Attorney Timothy A. Cassidy does not appear to have first hand knowledge of the efforts made via telephone to obtain their cooperation. It appears that Pam Knorr and Judy Garot have first hand knowledge of the pertinent events.

The Office would like Ms. Knorr's and Ms. Garot's statements regarding their efforts to obtain the non-signing inventors' signatures on the declaration. The statement of facts must be signed by a person having *firsthand knowledge* of the facts recited therein. Statements based on hearsay will not normally be accepted. MPEPE 409.03(d)

The petition fee associated with filing a petition under Rule 47 is $200.00. Petitioner has paid $130.00. Deposit account no. 04-1403 will be charged the $70.00 balance due.

Further correspondence with respect to this matter should be addressed as follows:

By Mail: Mail Stop PETITION
Commissioner for Patents
Post Office Box 1450
Alexandria, VA 22313-1450

By Hand: U. S. Patent and Trademark Office
Customer Window, Mail Stop PETITIONS
401 Dulany Street
Alexandria, VA 22314

The centralized facsimile number is **(571) 273-8300.**

Telephone inquiries should be directed to the undersigned at (571) 272-3230.

Shirene Willis Brantley

Shirene Willis Brantley
Senior Petitions Attorney
Office of Petitions

UNITED STATES PATENT AND TRADEMARK OFFICE

Commissioner for Patents
United States Patent and Trademark Office
P.O. Box 1450
Alexandria, VA 22313-1450
www.uspto.gov

DORITY & MANNING, P.A.
POST OFFICE BOX 1449
GREENVILLE SC 29602-1449

COPY MAILED

JUN 0 4 2008

OFFICE OF PETITIONS

In re Application of	:	
Wenzel, et al.	:	DECISION ACCORDING STATUS
Application No. 11/796,615	:	UNDER 37 CFR 1.47(a)
Filed: April 27, 2007	:	
Attorney Docket No. KCX-1132-CIP	:	
(64126564US01)		

This is in response to the reconsideration petition under 37 CFR 1.47(a), filed February 12, 2008.

The petition is **GRANTED.**

Petitioners have shown that the non-signing inventors, Mr. Ribble and Ms. Stahl, have constructively refused to sign the declaration.

The application and papers have been reviewed and found in compliance with 37 CFR 1.47(a). This application is hereby accorded Rule 1.47(a) status.

As provided in 37 CFR 1.47(c), this Office will forward notice of this application's filing to the non-signing inventors at the addresses given in the petition. Notice of the filing of this application will also be published in the Official Gazette.

This application is being referred to the Office of Patent Application Processing for pre-examination processing.

Telephone inquiries regarding this decision should be directed to the undersigned at (571) 272-3230.

Shirene Willis Brantley

Shirene Willis Brantley
Senior Petitions Attorney
Office of Petitions

UNITED STATES PATENT AND TRADEMARK OFFICE

Commissioner for Patents
United States Patent and Trademark Office
P.O. Box 1450
Alexandria, VA 22313-1450
www.uspto.gov

BRENDON F. RIBBLE
1308 ONEIDA ROAD
MENASHA WI 54952

COPY MAILED

JUN 0 4 2008

OFFICE OF PETITIONS

In re Application of	:	
Wenzel, et al.	:	LETTER
Application No. 11/796,615	:	
Filed: April 27, 2007	:	
Attorney Docket No. KCX-1132-CIP	:	
(64126564US01)		

Dear Mr. Ribble:

You are named as a joint inventor in the above-identified United States patent application, filed under the provisions of 35 U.S.C. 116 (United States Code), and 37 CFR 1.47(a), Rules of Practice in Patent Cases. Should a patent be granted on the application you will be designated therein as a joint inventor.

As a named inventor you are entitled to inspect any paper in the file wrapper of the application, order copies of all or any part thereof (at a prepaid cost per 37 CFR 1.19) or make your position of record in the application. Alternatively, you may arrange to do any of the preceding through a registered patent attorney or agent presenting written authorization from you. If you care to join the application, counsel of record (see below) would presumably assist you. Joining the application would entail the filing of an appropriate oath or declaration by you pursuant to 37 CFR 1.63.

Telephone inquiries regarding this communication should be directed to the undersigned at (571) 272-3230. Requests for information regarding your application should be directed to the File Information Unit at (703) 308-2733. Information regarding how to pay for and order a copy of the application, or a specific paper in the application, should be directed to the Certification Division at (571) 272-3150 or 1 (800) 972-6382 (outside the Washington, DC area).

Shirene Willis Brantley
Senior Petitions Attorney
Office of Petitions

cc: DORITY & MANNING, P.A.
POST OFFICE BOX 1449
GREENVILLE SC 29602-1449

UNITED STATES PATENT AND TRADEMARK OFFICE

Commissioner for Patents
United States Patent and Trademark Office
P.O. Box 1450
Alexandria, VA 22313-1450
www.uspto.gov

KATHERINE D. STAHL
424 SOUTH WEIMAR STREET
APPLETON WI 54915

COPY MAILED
JUN 04 2008
OFFICE OF PETITIONS

In re Application of	:	
Wenzel, et al.	:	LETTER
Application No. 11/796,615	:	
Filed: April 27, 2007	:	
Attorney Docket No. KCX-1132-CIP (64126564US01)	:	

Dear Ms. Stahl:

You are named as a joint inventor in the above-identified United States patent application, filed under the provisions of 35 U.S.C. 116 (United States Code), and 37 CFR 1.47(a), Rules of Practice in Patent Cases. Should a patent be granted on the application you will be designated therein as a joint inventor.

As a named inventor you are entitled to inspect any paper in the file wrapper of the application, order copies of all or any part thereof (at a prepaid cost per 37 CFR 1.19) or make your position of record in the application. Alternatively, you may arrange to do any of the preceding through a registered patent attorney or agent presenting written authorization from you. If you care to join the application, counsel of record (see below) would presumably assist you. Joining the application would entail the filing of an appropriate oath or declaration by you pursuant to 37 CFR 1.63.

Telephone inquiries regarding this communication should be directed to the undersigned at (571) 272-3230. Requests for information regarding your application should be directed to the File Information Unit at (703) 308-2733. Information regarding how to pay for and order a copy of the application, or a specific paper in the application, should be directed to the Certification Division at (571) 272-3150 or 1 (800) 972-6382 (outside the Washington, DC area).

Shirene Willis Brantley
Senior Petitions Attorney
Office of Petitions

cc: DORITY & MANNING, P.A.
POST OFFICE BOX 1449
GREENVILLE SC 29602-1449

UNITED STATES PATENT AND TRADEMARK OFFICE

Commissioner for Patents
United States Patent and Trademark Office
P.O. Box 1450
Alexandria, VA 22313-1450
www.uspto.gov

RICHARD ARON OSMAN
4070 CALLE ISABELLA
SAN CLEMENTE, CA 92672

COPY MAILED

JUN 27 2008

OFFICE OF PETITIONS

In re Application of :
Toufan Parman :
Application No. 11/796,631 : ON PETITION
Filed: April 27, 2007 :
Attorney Docket No. SRI-118/US :

This is a decision on the petition under 37 CFR 1.137(b), filed by March 6, 2008, to revive the above-identified application.

The petition is **GRANTED**.

The application became abandoned for failure to timely respond to a Notice to File Missing Parts (Notice) mailed May 22, 2007. The Notice set a period for reply of two (2) months and required an oath or declaration under 37 CFR 1.63, the surcharge under 37 CFR 1.16(e) and the search and examination fees. No extension of time under the provisions of 37 CFR 1.136(a) was obtained. Accordingly, the application became abandoned on July 23, 2007. A Notice of Abandonment was mailed on January 31, 2008. On March 6, 2008, the present petition was filed.

The petition satisfies the requirements of 37 CFR 1.137(b) in that petitioner has supplied (1) the reply in the form of an executed declaration under 37 CFR 1.63, the $255 search fee, $105 examination fee and the $65 surcharge; (2) the petition fee of $770; and (3) an adequate statement of unintentional delay[1].

The application is being referred to the Office of Patent Application Processing (OPAP) for further processing using the declaration filed March 6, 2008.

Telephone inquires related to this decision should be directed to the undersigned at (571) 272-3204. Telephone inquiries related to processing at OPAP should be directed to their hotline at (571) 272-4000.

Sherry D. Brinkley
Petitions Examiner
Office of Petitions

[1] While it is not apparent whether the person signing the statement of unintentional delay was in a position to have firsthand or direct knowledge of the facts and circumstances of the delay at issue, such statement is being treated as having been made as the result of a reasonable inquiry into the facts and circumstances of such delay. See 37 CFR 10.18(b) and Changes to Patent Practice and Procedure; Final Rule Notice, 62 Fed. Reg. 53131, 53178 (October 10, 1997), 1203 Off. Gaz. Pat. Office 63, 103 (October 21, 1997). In the event that such an inquiry has not been made, petitioner must make such an inquiry. If such inquiry results in the discovery that it is not correct that the entire delay in filing the required reply from the due date for the reply until the filing of a grantable petition pursuant to 37 CFR 1.137(b) was unintentional, petitioner must notify the Office.

UNITED STATES PATENT AND TRADEMARK OFFICE

Commissioner for Patents
United States Patent and Trademark Office
P.O. Box 1450
Alexandria, VA 22313-1450
www.uspto.gov

COPY MAILED

DEC 1 0 2009

OFFICE OF PETITIONS

THE LAW OFFICES OF
BRADLEY J. BEREZNAK
800 WEST EL CAMINO REAL
SUITE 180
MOUNTAIN VIEW CA 94040

In re Application of	:	
Sajassi	:	
Application No. 11/796,636	:	DECISION
Filed/Deposited: 27 April, 2007	:	
Attorney Docket No. 01236.P077	:	

This is a decision on the petition filed on 23 October, 2009, for revival of an application abandoned due to unintentional delay under 37 C.F.R. §1.137(b).

The petition under 37 C.F.R. §1.137(b) is **GRANTED**.

As to the Allegations
of Unintentional Delay

The requirements of a grantable petition pursuant to 37 C.F.R. §1.137(b) are the petition and fee therefor, a reply, a proper statement of unintentional delay under the regulation, and, where applicable, a terminal disclaimer and fee. (However, it does not appear that a terminal disclaimer and fee are due here.)

Petitioners' attentions always are directed to the guidance in the Commentary at MPEP §711.03(c)(II).

BACKGROUND

The record reflects as follows:

Petitioner failed to reply timely and properly to the Notice of Allowance/Allowability and Fees Due mailed on 25 June, 2009, with reply due under a non-extendable deadline on or before 25 September, 2009.

The application went abandoned by operation of law after midnight 25 September, 2009.

The Office mailed the Notice of Abandonment on 13 October, 2009.

On 23 October, 2009, Petitioner filed, *inter alia*, a petition (with fee) pursuant to 37 C.F.R. §1.137(b), a reply in the form of fees due, and made the statement of unintentional delay.

Petitioners' attentions always are directed to the guidance in the Commentary at MPEP §711.03(c)(II).

The availability of applications and application papers online to applicants/practitioners who diligently associate their Customer Number with the respective application(s) now provides an applicant/practitioner on-demand information as to events/transactions in an application.

Out of an abundance of caution, Petitioners always are reminded that those registered to practice and all others who make representations before the Office **must** inquire into the underlying facts of representations made to the Office and support averments with the appropriate documentation–since all owe to the Office the continuing duty to disclose.[1]

STATUTES, REGULATIONS AND ANALYSIS

Congress has authorized the Commissioner to "revive an application if the delay is shown to the satisfaction of the Commissioner to have been "unavoidable." 35 U.S.C. §133 (1994).[2]
The regulations at 37 C.F.R. §1.137(a) and (b) set forth the requirements for a Petitioner to revive a previously unavoidably or unintentionally, respectively, abandoned application under this congressional grant of authority.

Unintentional delays are those that do not satisfy the very strict statutory and regulatory requirements of unavoidable delay, and also, by definition, are not intentional.[3]))

---

[1] See supplement of 17 June, 1999. The Patent and Trademark Office is relying on petitioner's duty of candor and good faith and accepting a statement made by Petitioner. See Changes to Patent Practice and Procedure, 62 Fed. Reg. at 53160 and 53178, 1203 Off. Gaz. Pat. Office at 88 and 103 (responses to comments 64 and 109)(applicant obligated under 37 C.F.R. §10.18 to inquire into the underlying facts and circumstances when providing statements to the Patent and Trademark Office).

[2] 35 U.S.C. §133 provides:

35 U.S.C. §133 Time for prosecuting application.
Upon failure of the applicant to prosecute the application within six months after any action therein, of which notice has been given or mailed to the applicant, or within such shorter time, not less than thirty days, as fixed by the Commissioner in such action, the application shall be regarded as abandoned by the parties thereto, unless it be shown to the satisfaction of the Commissioner that such delay was unavoidable.

[3] Therefore, by example, an unintentional delay in the reply might occur if the reply and transmittal form are to be prepared for shipment by the US Postal Service, but other pressing matters distract one's attention and the mail is not timely deposited for shipment.

As to Allegations of
Unintentional Delay

The requirements of a grantable petition pursuant to 37 C.F.R. §1.137(b) are the petition and fee therefor, a reply, a proper statement of unintentional delay under the regulation, and, where applicable, a terminal disclaimer and fee.

It appears that the requirements under 37 C.F.R. §1.137(b) have been satisfied.

CONCLUSION

Accordingly, the petition under 37 C.F.R. §1.137(b) is **granted**.

The instant application is released to the Publications Branch to be processed into a patent in due course.

Petitioner may find it beneficial to view Private PAIR within a fortnight of the instant decision to ensure that the revival has been acknowledged by the Publications Branch in response to this decision. It is noted that all inquiries with regard to that change in status need be directed to the Publications Branch where that change of status must be effected—that does not occur in the Office of Petitions.

Telephone inquiries regarding this decision may be directed to the undersigned at (571) 272-3214—it is noted, however, that all practice before the Office is in writing (see: 37 C.F.R. §1.2[4]) and the proper authority for action on any matter in this regard are the statutes (35 U.S.C.), regulations (37 C.F.R.) and the commentary on policy (MPEP). Therefore, no telephone discussion may be controlling or considered authority for Petitioner's action(s).

/John J. Gillon, Jr./
John J. Gillon, Jr.
Senior Attorney
Office of Petitions

---

[4] The regulations at 37 C.F.R. §1.2 provide:
§1.2 Business to be transacted in writing.
All business with the Patent and Trademark Office should be transacted in writing. The personal attendance of applicants or their attorneys or agents at the Patent and Trademark Office is unnecessary. The action of the Patent and Trademark Office will be based exclusively on the written record in the Office. No attention will be paid to any alleged oral promise, stipulation, or understanding in relation to which there is disagreement or doubt.

UNITED STATES PATENT AND TRADEMARK OFFICE

UNITED STATES DEPARTMENT OF COMMERCE
United States Patent and Trademark Office
Address: COMMISSIONER FOR PATENTS
P.O. Box 1450
Alexandria, Virginia 22313-1450
www.uspto.gov

THE LAW OFFICES OF BRADLEY J. BEREZNAK
800 WEST EL CAMINO REAL
SUITE 180
MOUNTAIN VIEW, CA 94040

Mail Date: 07/09/2010

Applicant	: Ali Sajassi	: DECISION ON REQUEST FOR
Patent Number	: 7646778	: RECALCULATION of PATENT
Issue Date	: 01/12/2010	: TERM ADJUSTMENT IN VIEW
Application No	: 11/796,636	: OF WYETH AND NOTICE OF INTENT TO
Filed	: 04/27/2007	: ISSUE CERTIFICATE OF CORRECTION
		:

The Request for Recalculation is **GRANTED** to the extent indicated.

The patent term adjustment has been determined to be **259** days. The USPTO will *sua sponte* issue a certificate of correction reflecting the amount of PTA days determined by the recalculation.

Prior to the issuance of the certificate of correction, the USPTO will afford patentee an opportunity to be heard and request reconsideration. Accordingly, patentee has **one month or thirty (30) days**, whichever is longer, to file a request for reconsideration of this patent term adjustment calculation. See 35 U.S.C. 154(b)(3)(B)(ii) and 37 CFR 1.322(a)(4). No extensions of time will be granted under 37 CFR 1.136.

Patentee should use document code PET.OP if electronically filing a request for reconsideration of this patent term adjustment calculation. The patentee must also include the information required by 37 CFR 1.705(b)(2) and the fee required by 37 CFR 1.18(e). If patentee does not file a timely request for reconsideration of this patent term adjustment calculation including the information required by 37 CFR 1.705(b)(2) and the fee required by 37 CFR 1.18(e), the USPTO will issue a certificate of correction reflecting the PTA determination noted above.

Patentee should be aware that in order to preserve the right to review in the United States District Court for the District of Columbia of the USPTO patent term adjustment determination, patentee must ensure that he or she also take the steps required under 35 U.S.C. 154(b)(4)(A) in a timely manner. Nothing in the request for recalculation should be construed as providing an alternative time frame for commencing a civil action under 35 U.S.C. 154(b)(4)(A).

Any questions concerning this decision should be directed to the Office of Patent Legal Administration at 571-272-7702.

UNITED STATES PATENT AND TRADEMARK OFFICE

Commissioner for Patents
United States Patent and Trademark Office
P.O. Box 1450
Alexandria, VA 22313-1450
www.uspto.gov

LAW OFFICE OF JOHN L. ISAAC
3140 S. PEORIA STREET, SUITE K-243
AURORA, CO 80014

MAILED

JUN 0 8 2009

OFFICE OF PETITIONS

In re Application of	:	
John J. SELISKAR	:	
Application No. 11/796,652	:	DECISION ON PETITION TO
Filed: April 27, 2007	:	WITHDRAW FROM RECORD
Attorney Docket No. **7098.02.04**	:	

This is a decision on the Request to Withdraw as attorney or agent of record under 37 C.F.R. § 1.36(b), filed February 19, 2009.

The request is **DISMISS** as moot.

A review of the file record indicates that the power of attorney to the LAW OFFICE OF JOHN L. ISAAC has been revoked by the applicant of the patent application on February 19, 2009. Accordingly, the request to withdraw under 37 C.F.R. § 1.36(b) is moot.

All future communications from the Office will continue to be directed to the below-listed address until otherwise notified by applicant.

Telephone inquires concerning this decision should be directed to the undersigned at 571-272- 7253.

/Monica A. Graves/
Petitions Examiner, Office of Petitions

cc: **JOHN J. SELISKAR**
5501 HIGHBERRY WOODS ROAD
MIDLOTHIAN, VA 23112

UNITED STATES PATENT AND TRADEMARK OFFICE

Commissioner for Patents
United States Patent and Trademark Office
P.O. Box 1450
Alexandria, VA 22313-1450
www.uspto.gov

JACK PAAVILA
BOX 1151
ALEXANDRIA K0C IA0 CA
CANADA

COPY MAILED

JAN 2 4 2008

OFFICE OF PETITIONS

In re Application of	:	
Robert Winikoff	:	
Application No. 11/796,656	:	DECISION ON PETITION
Filed: June 20, 2007	:	TO MAKE SPECIAL UNDER
Attorney Docket No. 184-3US	:	37 CFR 1.102(c)(1)
	:	

This is a decision on the petition under 37 CFR 1.102(c)(1), filed December 31, 2007, to make the above-identified application special based on applicant's age as set forth in M.P.E.P. § 708.02, Section IV.

The petition is **GRANTED**.

A grantable petition to make an application special under 37 CFR 1.102(c)(1) and MPEP § 708.02, Section IV: Applicant's Age must be accompanied by evidence showing that at least one of the applicants is 65 years of age, or more, such as a birth certificate or a statement by applicant. No fee is required

The instant petition includes a photocopy of applicant Robert Winikoff's birth certificate. Accordingly, the above-identified application has been accorded "special" status.

Telephone inquiries concerning this decision should be directed to Kimberly Inabinet at 571-272-4618.

All other inquiries concerning either the examination or status of the application should be directed to the Technology Center.

Upon completion of the pre-examination processing by the Office of Initial Patent Examining, this application will be referred to Technology Center Art Unit 3781 for action on the merits commensurate with this decision.

Kimberly Inabinet

Kimberly Inabinet
Petitions Examiner
Office of Petitions

UNITED STATES PATENT AND TRADEMARK OFFICE

Commissioner for Patents
United States Patent and Trademark Office
P.O. Box 1450
Alexandria, VA 22313-1450
www.uspto.gov

JEFF MYERS
OFFICE OF RESEARCH DEVELOPMENT & ADMINISTRATION
SOUTHERN ILLINOIS UNIVERCITY CARBONDALE MC 4709
CARBONDALE, IL 62901

COPY MAILED

AUG 04 2008

OFFICE OF PETITIONS

In re Application of	:	
KOC, Rasit	:	
Application No. 11/796,664	:	DECISION ON PETITION
Filed: April 27, 2007	:	TO WITHDRAW
Attorney Docket No. **OGSIU-K001**	:	FROM RECORD

This is a decision on the Request to Withdraw as attorney or agent of record under 37 C.F.R. § 1.36(b), filed July 23, 2007.

The request is **APPROVED.**

A grantable request to withdraw as attorney/agent of record must be signed by every attorney/agent seeking to withdraw or contain a clear indication that one attorney is signing on behalf of another/others. A request to withdraw will not be approved unless at least 30 (thirty) days would remain between the date of approval and the later of the expiration date of a time to file a response or the expiration date of the maximum time period which can be extended under 37 C.F.R. § 1.136(a).

The request was signed by David L. Wood. David L. Wood has been withdrawn as attorney or agent of record. Applicant is reminded that there is no attorney of record at this time.

All future communications from the Office will continue to be directed to the assignee of the entire interest until otherwise properly notified by the applicant.

Telephone inquiries concerning this decision should be directed to the undersigned at 571-272-7253.

Monica A. Graves
Petitions Examiner
Office of Petitions

APPROVED: /AAH/ (03/10/2010)

PTO/SB/44 (09-07)
Approved for use through 08/31/2010. OMB 0651-0033
U.S. Patent and Trademark Office; U.S. DEPARTMENT OF COMMERCE
Under the Paperwork Reduction Act of 1995, no persons are required to respond to a collection of information unless it displays a valid OMB control number.
(Also Form PTO-1050)

UNITED STATES PATENT AND TRADEMARK OFFICE
CERTIFICATE OF CORRECTION

PATENT NO. : 7,473,189

APPLICATION NO.: 11/796,671

ISSUE DATE : January 6, 2009

INVENTOR(S) : Schweigert et al.

It is certified that an error appears or errors appear in the above-identified patent and that said Letters Patent is hereby corrected as shown below:

Column 4, Line 14 (Claim 1), delete "form" and insert --from-- after the text reading "the midpoint measured"

Column 4, Line 40 (Claim 2), insert "--club-- after the text reading "The putter"

Column 4, Line 40 (Claim 2), delete "and" and insert --cavity and the-- after the text reading "wherein the first"

Column 5, Line 10 (Claim 9), delete "form" and insert --from-- after the text reading "the midpoint measured"

Column 5, Line 48 (Claim 13), delete "then" and insert --than-- after the text reading "at the toe and the heel"

Column 6, LIne 8 (Claim 17), delete "," after the text reading "having a radius of curvature"

Column 6, Line 16 (Claim 17), delete "form" and insert --from-- before the text reading "the front face to the back,"

MAILING ADDRESS OF SENDER (Please do not use customer number below):
Karsten Manufacturing Corporation
2201 W. Desert Cove
Phoenix, Arizona 85029

This collection of information is required by 37 CFR 1.322, 1.323, and 1.324. The information is required to obtain or retain a benefit by the public which is to file (and by the USPTO to process) an application. Confidentiality is governed by 35 U.S.C. 122 and 37 CFR 1.14. This collection is estimated to take 1.0 hour to complete, including gathering, preparing, and submitting the completed application form to the USPTO. Time will vary depending upon the individual case. Any comments on the amount of time you require to complete this form and/or suggestions for reducing this burden, should be sent to the Chief Information Officer, U.S. Patent and Trademark Office, U.S. Department of Commerce, P.O. Box 1450, Alexandria, VA 22313-1450. DO NOT SEND FEES OR COMPLETED FORMS TO THIS ADDRESS. **SEND TO: Attention Certificate of Corrections Branch, Commissioner for Patents, P.O. Box 1450, Alexandria, VA 22313-1450.**

If you need assistance in completing the form, call 1-800-PTO-9199 and select option 2.

Privacy Act Statement

The **Privacy Act of 1974 (P.L. 93-579)** requires that you be given certain information in connection with your submission of the attached form related to a patent application or patent. Accordingly, pursuant to the requirements of the Act, please be advised that: (1) the general authority for the collection of this information is 35 U.S.C. 2(b)(2); (2) furnishing of the information solicited is voluntary; and (3) the principal purpose for which the information is used by the U.S. Patent and Trademark Office is to process and/or examine your submission related to a patent application or patent. If you do not furnish the requested information, the U.S. Patent and Trademark Office may not be able to process and/or examine your submission, which may result in termination of proceedings or abandonment of the application or expiration of the patent.

The information provided by you in this form will be subject to the following routine uses:

1. The information on this form will be treated confidentially to the extent allowed under the Freedom of Information Act (5 U.S.C. 552) and the Privacy Act (5 U.S.C 552a). Records from this system of records may be disclosed to the Department of Justice to determine whether disclosure of these records is required by the Freedom of Information Act.
2. A record from this system of records may be disclosed, as a routine use, in the course of presenting evidence to a court, magistrate, or administrative tribunal, including disclosures to opposing counsel in the course of settlement negotiations.
3. A record in this system of records may be disclosed, as a routine use, to a Member of Congress submitting a request involving an individual, to whom the record pertains, when the individual has requested assistance from the Member with respect to the subject matter of the record.
4. A record in this system of records may be disclosed, as a routine use, to a contractor of the Agency having need for the information in order to perform a contract. Recipients of information shall be required to comply with the requirements of the Privacy Act of 1974, as amended, pursuant to 5 U.S.C. 552a(m).
5. A record related to an International Application filed under the Patent Cooperation Treaty in this system of records may be disclosed, as a routine use, to the International Bureau of the World Intellectual Property Organization, pursuant to the Patent Cooperation Treaty.
6. A record in this system of records may be disclosed, as a routine use, to another federal agency for purposes of National Security review (35 U.S.C. 181) and for review pursuant to the Atomic Energy Act (42 U.S.C. 218(c)).
7. A record from this system of records may be disclosed, as a routine use, to the Administrator, General Services, or his/her designee, during an inspection of records conducted by GSA as part of that agency's responsibility to recommend improvements in records management practices and programs, under authority of 44 U.S.C. 2904 and 2906. Such disclosure shall be made in accordance with the GSA regulations governing inspection of records for this purpose, and any other relevant (*i.e.*, GSA or Commerce) directive. Such disclosure shall not be used to make determinations about individuals.
8. A record from this system of records may be disclosed, as a routine use, to the public after either publication of the application pursuant to 35 U.S.C. 122(b) or issuance of a patent pursuant to 35 U.S.C. 151. Further, a record may be disclosed, subject to the limitations of 37 CFR 1.14, as a routine use, to the public if the record was filed in an application which became abandoned or in which the proceedings were terminated and which application is referenced by either a published application, an application open to public inspection or an issued patent.
9. A record from this system of records may be disclosed, as a routine use, to a Federal, State, or local law enforcement agency, if the USPTO becomes aware of a violation or potential violation of law or regulation.

SPE RESPONSE FOR CERTIFICATE OF CORRECTION

Paper No.:20100310

DATE : March 10, 2010

TO SPE OF : ART UNIT 3711

SUBJECT : Request for Certificate of Correction on Patent No.: 7473189

A response is requested with respect to the accompanying request for a certificate of correction.

Please complete this form and return with file, within **7** days to:
Certificates of Correction Branch - ST (South Tower) 9A22
Palm location **7590** - Tel. No. (703) 305-8309

With respect to the change(s) requested, correcting Office and/or Applicant's errors, should the patent read as shown in the certificate of correction? No new matter should be introduced, nor should the scope or meaning of the claims be changed.

Thank You For Your Assistance **Certificates of Correction Branch**

The request for issuing the above-identified correction(s) is hereby:

Note your decision on the appropriated box.

☒ **Approved** All changes apply.

☐ **Approved in Part** Specify below which changes **do not** apply.

☐ **Denied** State the reasons for denial below.

Comments:

Corrections are based on the numbering of the claims in the patent and not the application.

/Gene Kim/
Supervisory Patent Examiner, Art Unit 3711

UNITED STATES PATENT AND TRADEMARK OFFICE

Commissioner for Patents
United States Patent and Trademark Office
P.O. Box 1450
Alexandria, VA 22313-1450
www.uspto.gov

Hamir Merchant
506 Arcadia Court
Keller TX 76248

COPY MAILED
NOV 20 2008

In re Application of	:	
Hamir Merchant	:	
Application No. 11/796,693	:	DECISION ON PETITION
Filing Date: April 30, 2007	:	
Attorney Docket No. CG001	:	

This is a decision on the petition under the unintentional provisions of 37 CFR 1.137(b), filed, April 21, 2008 to revive the above-identified application.

The petition is **GRANTED**.

The application became abandoned for failure to reply in a timely manner to the Notice to File Missing Parts of Nonprovisional Application (Notice), mailed May 25, 2007. The Notice set a period for reply of two (2) months from the mail date of the Notice. No extensions of time under the provisions of 37 CFR 1.136(a) were obtained. Accordingly, the application became abandoned on July 26, 2007. The Notice of Abandonment was mailed February 5, 2008.

The petition satisfies the requirements of 37 CFR 1.137(b) in that petitioner has supplied (1) the reply in the form of a substitute specification, drawings and abstract with proper line spacing , (2) the petition fee of $770, and (3) a proper statement of unintentional delay.

Telephone inquiries concerning this decision should be directed to Terri Williams at (571) 272-2991.

This application is being referred to the Office of Patent Application Processing for further processing.

Chris Bottorff
Petitions Examiner
Office of Petitions

UNITED STATES PATENT AND TRADEMARK OFFICE

Commissioner for Patents
United States Patent and Trademark Office
P.O. Box 1450
Alexandria, VA 22313-1450
www.uspto.gov

SPRINKLE IP LAW GROUP
1301 W. 25TH STREET
SUITE 408
AUSTIN, TX 78705

COPY MAILED

DEC 3 1 2007

OFFICE OF PETITIONS

In re Application of :
Pattison et al. :
Application No. 11/796,707 :
Filed: April 27, 2007 :
Attorney Docket No. 724S1130-1 :
For: Platform for Interoperability :

Decision Refusing to Accord
Status Under 37 CFR 1.47(a)

This is a decision on the petition under 37 CFR 1.47(a), filed August 30, 2007.

The petition is **DISMISSED**.

Any request for reconsideration of this decision must be submitted within TWO (2) MONTHS from the mail date of this decision. Extensions of time under 37 CFR 1.136(a) are permitted. No further petition fee is required for the request. Any response should be entitled "Request for Reconsideration of Petition Under 37 CFR 1.47(a)" and may include an oath or declaration executed by the current non-signing inventor(s). **Failure to respond will result in abandonment of the application.**

A grantable petition under 37 CFR 1.47(a) requires

(1) proof that the non-signing inventor cannot be found or reached after diligent effort or that the inventor refused to sign the declaration after having been presented with the application papers (specification, claims, and drawings),
(2) a proper oath or Declaration executed by the available joint inventor(s),
(3) the fee of $200 as specified in 37 CFR 1.17(g), and
(4) the last known address of the non-signing inventor(s).

In addition to the above requirements, the signing inventors must sign the declaration on behalf of the non-signing inventor. See MPEP 409.03(a).

The instant petition fails to satisfy items (1) and (2) above.

As to item (1), Office policy requires a copy of an application be presented to an inventor in order to establish constructive refusal to sign a declaration. Petitioner must establish the inventor was able to sign the declaration but refused to sign the declaration. An inventor is unable to sign a declaration stating he or she has "reviewed and understands the application papers" when the

inventor has not been presented with a copy of the application and therefore has not reviewed the application. In addition, until an inventor reviews the papers and reads the specification and claims, an inventor cannot know if he or she is actually an inventor of the claimed invention. The petition fails to establish the non-signing inventors were presented with a copy of the application papers.

Petitioner should send a copy of the application to the non-signing inventors along with instructions setting a deadline for the return of a signed declaration. The letter to the inventors should state that, if petitioner receives no reply from the inventor, petitioner will interpret the lack of reply as a refusal to sign the declaration. This sort of ultimatum lends support to a finding of refusal by conduct when a response is not received from an inventor. The proof of the pertinent events should be made by a statement of someone with firsthand knowledge of the events and should include documentary evidence, such as a certified mail return receipt, cover letter of instructions, telegram, etc.

As to item (2), an oath or declaration for the patent application in compliance with 37 CFR 1.63 and 1.64 has not been presented. The declaration does not include citizenship or mailing address information for either non-signing inventor. Per 35 U.S.C. § 115, an oath or declaration must list the citizenship of each inventor. Unless an Application Data Sheet (ADS) is filed, 37 CFR 1.63 requires an oath or declaration to include a mailing address for each inventor. An ADS has not been filed.

A new oath or declaration in compliance with 37 CFR 1.63 and 1.64 signed by the other co-inventors on behalf of themselves and on behalf of non-signing inventors is REQUIRED. See MPEP 409.03(a).

Petitioner should note the required petition fee is $200. Therefore, $200, instead of $130, has been charged to petitioner's deposit account for the petition fee.

Further correspondence with respect to this matter should be addressed as follows:

By mail: Mail Stop Petition
Commissioner for Patents
P.O. Box 1450
Alexandria, VA 22313-1450

By facsimile: (571) 273-8300
Attn: Office of Petitions

Telephone inquiries regarding this communication should be directed to Petitions Attorney Steven Brantley at (571) 272-3203.

Charles Steven Brantley
Senior Petitions Attorney
Office of Petitions

UNITED STATES PATENT AND TRADEMARK OFFICE

Commissioner for Patents
United States Patent and Trademark Office
P.O. Box 1450
Alexandria, VA 22313-1450
www.uspto.gov

Sprinkle IP Law Group
Suite 408
1301 W 25th Street
Austin, TX 78705

COPY MAILED

JUN 30 2008

OFFICE OF PETITIONS

In re Application of	:	
Pattison et al.	:	Decision Noting Joinder of Inventor and
Application No. 11/796,707	:	Decision Dismissing Any Request for
Filed: April 27, 2007	:	Status Under 37 CFR 1.47 as Moot AND
Attorney Docket No. 724S1130-1	:	Decision on Petition under 37 CFR 1.182
For: Platform for Interoperability	:	

This is in response to the papers filed March 26, 2008, which include a declaration signed by all the inventors and a petition under 37 CFR 1.182 requesting the correction of the name for one of the inventors.

The petition under 37 CFR 1.47 is **dismissed as moot**.

The petition under 37 CFR 1.182 is **granted**.

The petition under 37 CFR 1.47:

The papers filed March 26, 2008, in response to a Decision refusing to accord status under 37 CFR 1.47(a) mailed on December 31, 2007, include a Declaration signed by the previously non-signing inventor in compliance with 37 CFR 1.63.

In view of the joinder of the inventor, further consideration under Rule 1.47(a) is unnecessary. Therefore, the petition is dismissed as moot.

The petition under 37 CFR 1.182:

MPEP 605.04(b) states,

> Except for correction of a typographical or transliteration error in the spelling of an inventor's name, a request to have the name changed from the typewritten version to the signed version or any other corrections in the name of the inventor(s) will not be entertained, unless accompanied by a petition under 37 CFR 1.182 together with an appropriate petition fee. Since amendments are not permitted after the payment of the issue fee (37 CFR 1.312), a petition under 37 CFR 1.182 to change the name of the inventor cannot be granted if filed after the payment of the issue fee.

Petitioner has filed a petition under 37 CFR 1.182 to correct an inventor's name and the petition has been filed prior to payment of the issue fee. The error in the inventor's name was made in good faith.

The inventor's name has been changed in Office records from Michael Edward Luna to Michael Edward Smith Luna.

The Office of Patent Application Processing will be informed of the instant decision so that it may continue taking steps to prepare the application for examination.

Telephone inquiries regarding this communication should be directed to Petitions Attorney Steven Brantley at (571) 272-3203.

Charles Steven Brantley
Senior Petitions Attorney
Office of Petitions

UNITED STATES PATENT AND TRADEMARK OFFICE

Commissioner for Patents
United States Patent and Trademark Office
P.O. Box 1450
Alexandria, VA 22313-1450
www.uspto.gov

JOSEPH CARL FIREY
P.O. BOX 15514
SEATTLE WA 98115-0514

COPY MAILED

JAN 04 2010

In re Application of Firey, Joseph Carl Application No. 11/796,714 Filed: April 30, 2007 Title: ROTARY RESIDUAL FUEL SLURRIFIER	: : : : :	ON PETITION

This is a decision on the petition under 37 CFR 1.102(c)(1), filed November 9, 2009, to make the above-identified application special based on applicant's age as set forth in M.P.E.P. § 708.02, Section IV.

The petition is **GRANTED**.

A grantable petition to make an application special under 37 CFR 1.102(c)(1) and MPEP § 708.02, Section IV: Applicant's Age must be accompanied by evidence showing that at least one of the applicants is 65 years of age, or more, such as a birth certificate or a statement by applicant. No fee is required.

The instant petition includes a statement from the applicant, Joseph Carl Firey, along with a copy of his birth certificate. Accordingly, the above-identified application has been accorded "special" status.

Telephone inquiries concerning this decision should be directed to the undersigned at 571-272-3206. All other inquiries concerning either the examination or status of the application should be directed to the Technology Center.

This matter is being referred to the Technology Center Art Unit 1797 for action on the merits commensurate with this decision.

Liana Walsh
Petitions Examiner
Office of Petitions

SPE RESPONSE FOR CERTIFICATE OF CORRECTION

Paper No.: _____

DATE : 10/27/09

TO SPE OF : ART UNIT 3747

SUBJECT : Request for Certificate of Correction for Appl. No.: 11796722 Patent No.: 7556016

Please respond to this request for a certificate of correction within 7 days.

FOR IFW FILES:

Please review the requested changes/corrections as shown in the **COCIN** document(s) in the IFW application image. No new matter should be introduced, nor should the scope or meaning of the claims be changed.

Please complete the response (see below) and forward the completed response to scanning using document code **COCX**.

FOR PAPER FILES:

Please review the requested changes/corrections as shown in the attached certificate of correction. Please complete this form (see below) and forward it with the file to:

Certificates of Correction Branch (C of C)
Randolph Square 9D40-D
Palm Location 7580

You can fax the Directors/SPE response to 571-270-9990

Lamonte Newsome
Certificates of Correction Branch
703-756-1574

Thank You For Your Assistance

The request for issuing the above-identified correction(s) is hereby:
Note your decision on the appropriate box.

- ❑ **Approved** — **All** changes apply.
- ❑ **Approved in Part** — Specify below which changes **do not** apply.
- x **Denied** — State the reasons for denial below.

Comments: The request for the certificate of correction is denied because applicant has never provided a copy of the certified foreign priority document and was twice informed of this failure during prosecution, in the office actions of 9/22/2008 and 3/13/2009. A German examination report was received at the time of filing the application, but not the certified copy of the priority document.

SPE RESPONSE FOR CERTIFICATE OF CORRECTION

/Stephen Kirk Cronin/ 3747

SPE **Art Unit**

UNITED STATES PATENT AND TRADEMARK OFFICE

Commissioner for Patents
United States Patent and Trademark Office
P.O. Box 1450
Alexandria, VA 22313-1450
www.uspto.gov

Date Mailed : 11/10/09

Patent No. : 7556016 B2
Patent Issued : 07/07/09
Docket No. : **119618-00082**

Re: Request for Certificate of Correction

Consideration has been given your request for the issuance of a certificate of correction for the above-identified patent under the provisions of Rule(s) 1.322.

Respecting the alleged errors in the documents filed on 09/15/09; please see attachments. **"Therefore, no correction(s) is in order here under United States Codes (U.S.C.) 254 and the Code of Federal Regulation (C.F.R.) 1322."**

In view of the foregoing, your request in this matter is hereby denied.

Lamonte M. Newsome
For Mary Diggs, Supervisor
Decisions & Certificates
Of Correction Branch
(703) 305-8309 or (703) 756-1574

K&L Gates LLP
P.O. BOX 1135
CHICAGO IL 60690

LMN

SPE RESPONSE FOR CERTIFICATE OF CORRECTION

Paper No.: _____

DATE : 10/27/09

TO SPE OF : ART UNIT 3747

SUBJECT : Request for Certificate of Correction for Appl. No.: 11796722 Patent No.: 7556016

Please respond to this request for a certificate of correction within 7 days.

FOR IFW FILES:

Please review the requested changes/corrections as shown in the **COCIN** document(s) in the IFW application image. No new matter should be introduced, nor should the scope or meaning of the claims be changed.

Please complete the response (see below) and forward the completed response to scanning using document code **COCX**.

FOR PAPER FILES:

Please review the requested changes/corrections as shown in the attached certificate of correction. Please complete this form (see below) and forward it with the file to:

Certificates of Correction Branch (C of C)
Randolph Square 9D40-D
Palm Location 7580
You can fax the Directors/SPE response to 571-270-9990

Lamonte Newsome
Certificates of Correction Branch
703-756-1574

Thank You For Your Assistance

The request for issuing the above-identified correction(s) is hereby:
Note your decision on the appropriate box.

- ☐ **Approved** — **All** changes apply.
- ☐ **Approved in Part** — Specify below which changes **do not** apply.
- x**Denied** — State the reasons for denial below.

Comments: The request for the certificate of correction is denied because applicant has never provided a copy of the certified foreign priority document and was twice informed of this failure during prosecution, in the office actions of 9/22/2008 and 3/13/2009. A German examination report was received at the time of filing the application, but not the certified copy of the priority document.

SPE RESPONSE FOR CERTIFICATE OF CORRECTION

/Stephen Kirk Cronin/
SPE

3747
Art Unit

UNITED STATES PATENT AND TRADEMARK OFFICE

Commissioner for Patents
United States Patent and Trademark Office
P.O. Box 1450
Alexandria, VA 22313-1450
www.uspto.gov

Date Mailed : 11/13/09

Patent No. : 7556016 B2
Patent Issued : 07/07/09
Docket No. : **119618-00082**

Re: Request for Certificate of Correction

Consideration has been given your request for the issuance of a certificate of correction for the above-identified patent under the provisions of Rule(s) 1.322.

Respecting the alleged errors in the documents filed on 09/15/09; please see attachments. **"Therefore, no correction(s) is in order here under United States Codes (U.S.C.) 254 and the Code of Federal Regulation (C.F.R.) 1322."**

In view of the foregoing, your request in this matter is hereby denied.

Lamonte M. Newsome
For Mary Diggs, Supervisor
Decisions & Certificates
Of Correction Branch
(703) 305-8309 or (703) 756-1574

K&L Gates LLP
P.O. BOX 1135
CHICAGO IL 60690

LMN

SPE RESPONSE FOR CERTIFICATE OF CORRECTION

Paper No.: _____

DATE : 10/27/09

TO SPE OF : ART UNIT 3747

SUBJECT : Request for Certificate of Correction for Appl. No.: 11796722 Patent No.: 7556016

Please respond to this request for a certificate of correction within 7 days.

FOR IFW FILES:

Please review the requested changes/corrections as shown in the **COCIN** document(s) in the IFW application image. No new matter should be introduced, nor should the scope or meaning of the claims be changed.

Please complete the response (see below) and forward the completed response to scanning using document code **COCX**.

FOR PAPER FILES:

Please review the requested changes/corrections as shown in the attached certificate of correction. Please complete this form (see below) and forward it with the file to:

Certificates of Correction Branch (C of C)
Randolph Square 9D40-D
Palm Location 7580

You can fax the Directors/SPE response to 571-270-9990

Lamonte Newsome

Certificates of Correction Branch

703-756-1574

Thank You For Your Assistance

The request for issuing the above-identified correction(s) is hereby:

Note your decision on the appropriate box.

❑ **Approved**	**All** changes apply.
❑ **Approved in Part**	Specify below which changes **do not** apply.
x**Denied**	State the reasons for denial below.

Comments: The request for the certificate of correction is denied because applicant has never provided a copy of the certified foreign priority document and was twice informed of this failure during prosecution, in the office actions of 9/22/2008 and 3/13/2009. A German examination report was received at the time of filing the application, but not the certified copy of the priority document.

SPE RESPONSE FOR CERTIFICATE OF CORRECTION

/Stephen Kirk Cronin/
SPE

3747
Art Unit

UNITED STATES PATENT AND TRADEMARK OFFICE

Commissioner for Patents
United States Patent and Trademark Office
P.O. Box 1450
Alexandria, VA 22313-1450
www.uspto.gov

CELERA AN APPLERA BUSINESS UNIT
1401 HARBOR BAY PARKWAY
ALAMEDA CA 94502

COPY MAILED

MAY 27 2008

OFFICE OF PETITIONS

In re Application of	:	
Huang, et al	:	
Application No. 11/796,733	:	ON PETITION
Filed: April 26, 2007	:	
Attorney Docket No. CD000006ORD	:	

This is a decision on the petition to withdraw the holding of abandonment under 37 CFR 1.181, filed March 31, 2008.

The petition under 37 CFR 1.181 is **GRANTED**.

The holding of abandonment is **WITHDRAWN**.

The above-identified application became abandoned for failure to timely respond to the Notice to File Missing Parts mailed July 7, 2007. This Notice set an extendable period for reply of two (2) months. No reply been received, the application became abandoned on September 2, 2007. A Notice of Abandonment was mailed on March 20, 2008.

Petitioner states that he never received the Notice, and furthermore points the Office's attention to the fact that the Notice was improperly mailed to "1401 Harbor Day Parkway" rather than "1401 Harbor Bay Parkway".

To establish non-receipt of an Office action, a petitioner:

> must state that the Office action was not received at the correspondence address of record, and that a search of the practitioner's record(s), including any file jacket or the equivalent, and the application contents, indicates that the Office action was not received. A copy of the record(s) used by the practitioner where the non-received Office action would have been entered had it been received is required.[1]

In addition, the Manual of Patent Examining Procedure § 711.03(c) also states:

> A copy of the practitioner's record(s) required to show non-receipt of the Office action should include the master docket for the firm. That is, if a three month period for reply was set in the non-received Office action, a copy of the master docket report showing all replies docketed for a date three months from the mail date of the non-received Office action must be submitted as documentary proof of nonreceipt of the Office action. If no such master docket exists, the practitioner should so state and provide other evidence such as, but not limited to, the following: the application file jacket; incoming mail log; calendar; reminder system; or the individual docket record for the application in question.

Here, petitioner has submitted a copy of a master docket report, showing all replies docketed for a due date between the period of January 12, 2007 and December 16, 2007. An entry for the instant application is absent. That, combined with the fact that the Notice contained an error in the mailing address, supports the conclusion that the Notice was not received.

The application is being forwarded to the Office of Patent Application Processing for re-mailing of the July 6, 2007 Notice to File Missing Parts, setting a new period for reply.

Telephone inquiries related to this decision should be directed to the undersigned at (571)272-3207.

Cliff Congo
Petitions Attorney
Office of Petitions

---

[1] MPEP 711.03(c).

UNITED STATES PATENT AND TRADEMARK OFFICE

Commissioner for Patents
United States Patent and Trademark Office
P.O. Box 1450
Alexandria, VA 22313-1450
www.uspto.gov

ABELMAN, FRAYNE & SCHWAB
666 THIRD AVENUE, 10TH FLOOR
NEW YORK NY 10017

COPY MAILED

JAN 10 2008

OFFICE OF PETITIONS

In re Application of	:	DECISION ACCORDING STATUS
SCHMID, HAMMERSTINGL and LIND	:	UNDER 37 CFR 1.47(a)
Application No. 11/796,736	:	
Filed: 04/27/2007	:	
Attorney Docket No. 208,201	:	
Title: HAND-HELD POWER TOOL WITH	:	
ADJUSTABLE HANDLES	:	

This is in response to the petition under 37 CFR 1.47(a), filed October 25, 2007. Petitioner obtained an extension of time for response within the third month. Accordingly, the petition is filed timely.

The petition is **GRANTED.**

Petitioner has shown that the non-signing inventor cannot be located after diligent efforts to join in the filing of the above-identified application.

The application and papers have been reviewed and found in compliance with 37 CFR 1.47(a). This application is hereby accorded Rule 1.47(a) status.

As provided in 37 CFR 1.47(c), this Office will forward notice of this application's filing to the non-signing inventor at the address given in the petition. Notice of the filing of this reissue application will also be published in the Official Gazette.

This application is being referred to the Office of Initial Patent Examination for pre-examination processing.

Telephone inquiries regarding this decision should be directed to the undersigned at (571) 272-3211.

Christina Tartera Donnell

Christina Tartera Donnell
Senior Petitions Attorney
Office of Petitions

UNITED STATES PATENT AND TRADEMARK OFFICE

Commissioner for Patents
United States Patent and Trademark Office
P.O. Box 1450
Alexandria, VA 22313-1450
www.uspto.gov

Elisabeth Lind
Reichsstrasse 114, A-6800
Feldkirch, Austria

COPY MAILED

JAN 10 2008

OFFICE OF PETITIONS

LETTER

In re Application of :
SCHMID, HAMMERSTINGL and LIND :
Application No. 11/796,736 :
Filed: 04/27/2007 :
Attorney Docket No. 208,201 :
Title: HAND-HELD POWER TOOL WITH :
ADJUSTABLE HANDLES :

Dear Ms. Lind:

You are named as a joint inventor in the above-identified United States patent application, filed under the provisions of 35 U.S.C. 116 (United States Code), and 37 CFR 1.47(a), Rules of Practice in Patent Cases. Should a patent be granted on the application you will be designated therein as a joint inventor.

As a named inventor you are entitled to inspect any paper in the file wrapper of the application, order copies of all or any part thereof (at a prepaid cost per 37 CFR 1.19) or make your position of record in the application. Alternatively, you may arrange to do any of the preceding through a registered patent attorney or agent presenting written authorization from you. If you care to join the application, counsel of record (see below) would presumably assist you. Joining the application would entail the filing of an appropriate oath or declaration by you pursuant to 37 CFR 1.63.

Requests for information regarding your application should be directed to the File Information Unit at (703) 308-2733. Information regarding how to pay for and order a copy of the application, or a specific paper in the application, should be directed to the Certification Division at (571) 272-3150 or (800) 972-6382 (outside the Washington, DC area).

Christina Tartera Donnell

Christina Tartera Donnell
Senior Petitions Attorney
Office of Petitions

ABELMAN, FRAYNE & SCHWAB
666 THIRD AVENUE, 10TH FLOOR
NEW YORK NY 10017

UNITED STATES PATENT AND TRADEMARK OFFICE

UNITED STATES DEPARTMENT OF COMMERCE
United States Patent and Trademark Office
Address: COMMISSIONER FOR PATENTS
P.O. Box 1450
Alexandria, Virginia 22313-1450
www.uspto.gov

ABELMAN, FRAYNE & SCHWAB
666 THIRD AVENUE, 10TH FLOOR
NEW YORK, NY 10017

Mail Date: 04/21/2010

Applicant	: Olaf Koch	: DECISION ON REQUEST FOR
Patent Number	: 7628232	: RECALCULATION of PATENT
Issue Date	: 12/08/2009	: TERM ADJUSTMENT IN VIEW
Appliction No	: 11/796,737	: OF WYETH AND NOTICE OF INTENT TO
Filed	: 04/27/2007	: ISSUE CERTIFICATE OF CORRECTION
		:

The Request for Recalculation is **GRANTED** to the extent indicated.

The patent term adjustment has been determined to be **184** days. The USPTO will *sua sponte* issue a certificate of correction reflecting the amount of PTA days determined by the recalculation.

Prior to the issuance of the certificate of correction, the USPTO will afford patentee an opportunity to be heard and request reconsideration. Accordingly, patentee has **one month or thirty (30) days**, whichever is longer, to file a request for reconsideration of this patent term adjustment calculation. See 35 U.S.C. 154(b)(3)(B)(ii) and 37 CFR 1.322(a)(4). No extensions of time will be granted under 37 CFR 1.136.

Patentee should use document code PET.OP if electronically filing a request for reconsideration of this patent term adjustment calculation. The patentee must also include the information required by 37 CFR 1.705(b)(2) and the fee required by 37 CFR 1.18(e). If patentee does not file a timely request for reconsideration of this patent term adjustment calculation including the information required by 37 CFR 1.705(b)(2) and the fee required by 37 CFR 1.18(e), the USPTO will issue a certificate of correction reflecting the PTA determination noted above.

Patentee should be aware that in order to preserve the right to review in the United States District Court for the District of Columbia of the USPTO patent term adjustment determination, patentee must ensure that he or she also take the steps required under 35 U.S.C. 154(b)(4)(A) in a timely manner. Nothing in the request for recalculation should be construed as providing an alternative time frame for commencing a civil action under 35 U.S.C. 154(b)(4)(A).

Any questions concerning this decision should be directed to the Office of Patent Legal Administration at 571-272-7702.

UNITED STATES PATENT AND TRADEMARK OFFICE

UNITED STATES DEPARTMENT OF COMMERCE
United States Patent and Trademark Office
Address: COMMISSIONER FOR PATENTS
P.O. Box 1450
Alexandria, Virginia 22313-1450
www.uspto.gov

SHUMAKER & SIEFFERT, P. A.
1625 RADIO DRIVE
SUITE 300
WOODBURY, MN 55125

Mail Date: 04/20/2010

Applicant	: Kenneth T. Heruth	: DECISION ON REQUEST FOR
Patent Number	: 7590453	: RECALCULATION of PATENT
Issue Date	: 09/15/2009	: TERM ADJUSTMENT IN VIEW
Appliction No	: 11/796,811	: OF WYETH AND NOTICE OF INTENT TO
Filed	: 04/30/2007	: ISSUE CERTIFICATE OF CORRECTION
		:

The Request for Recalculation is **GRANTED** to the extent indicated.

The patent term adjustment has been determined to be **0** days. The USPTO will *sua sponte* issue a certificate of correction reflecting the amount of PTA days determined by the recalculation.

Prior to the issuance of the certificate of correction, the USPTO will afford patentee an opportunity to be heard and request reconsideration. Accordingly, patentee has **one month or thirty (30) days**, whichever is longer, to file a request for reconsideration of this patent term adjustment calculation. See 35 U.S.C. 154(b)(3)(B)(ii) and 37 CFR 1.322(a)(4). No extensions of time will be granted under 37 CFR 1.136.

Patentee should use document code PET.OP if electronically filing a request for reconsideration of this patent term adjustment calculation. The patentee must also include the information required by 37 CFR 1.705(b)(2) and the fee required by 37 CFR 1.18(e). If patentee does not file a timely request for reconsideration of this patent term adjustment calculation including the information required by 37 CFR 1.705(b)(2) and the fee required by 37 CFR 1.18(e), the USPTO will issue a certificate of correction reflecting the PTA determination noted above.

Patentee should be aware that in order to preserve the right to review in the United States District Court for the District of Columbia of the USPTO patent term adjustment determination, patentee must ensure that he or she also take the steps required under 35 U.S.C. 154(b)(4)(A) in a timely manner. Nothing in the request for recalculation should be construed as providing an alternative time frame for commencing a civil action under 35 U.S.C. 154(b)(4)(A).

Any questions concerning this decision should be directed to the Office of Patent Legal Administration at 571-272-7702.

UNITED STATES PATENT AND TRADEMARK OFFICE

Commissioner for Patents
United States Patent and Trademark Office
P.O. Box 1450
Alexandria, VA 22313-1450
www.uspto.gov

SD3, LLC
9564 W. W. TUALATIN ROAD
TUALATIN, OR 97062

MAILED

APR 09 2010

OFFICE OF PETITIONS

In re Application of	:	
Stephen F. Gass, et al.	:	
Application No. 11/796,819	:	DECISION ON PETITION
Filed: April 30, 2007	:	
Attorney Docket No. SDT 301A	:	

This is a decision on the petition, filed January 21, 2010, which is being treated as a petition under 37 CFR 1.8(b), requesting withdrawal of the holding of abandonment in the above-identified application.

The petition is **GRANTED**.

This application was held abandoned for failure to timely respond to the Office action of June 25, 2009, which set a three (3) month shortened statutory period for reply. Accordingly, a reply was due on or before September 25, 2009.

Petitioner states that a timely reply was mailed via certificate of transmission on October 23, 2009, which included the following papers: a request for a one (1) month extension of time and the amendment. Petitioner has submitted a copy of the previously mailed correspondence, which bears a certificate of transmission dated October 23, 2009, which would have rendered the reply timely if received.

The file record does not include the originally submitted papers. Failure to receive correspondence which includes a certificate of mailing or certificate of facsimile transmission is addressed in 37 CFR 1.8(b), reproduced below:

> In the event that correspondence is considered timely filed by being mailed or transmitted in accordance with paragraph (a) of this section, but not received in the U.S. Patent and Trademark Office after a reasonable amount of time has elapsed from the time of mailing or transmitting of the correspondence, or after the application is held to be abandoned, or after the proceeding is dismissed, terminated, or decided with prejudice, the correspondence will be considered timely if the party who forwarded such correspondence:

(1) Informs the Office of the previous mailing or transmission of the correspondence promptly after becoming aware that the Office has no evidence of receipt of the correspondence;

(2) Supplies an additional copy of the previously mailed or transmitted correspondence and certificate; and

(3) Includes a statement which attests on a personal knowledge basis or to the satisfaction of the Director to the previous timely mailing or transmission. If the correspondence was sent by facsimile transmission, a copy of the sending unit's report confirming transmission may be used to support this statement.

The petition satisfies the above requirements of 37 CFR 1.8(b). Accordingly, the holding of abandonment for failure to timely file a reply to the Office action of June 25, 2009 is hereby **withdrawn** and the application **restored** to pending status.

The copy of the reply received with the petition will be accepted in place of the reply shown to have been transmitted by facsimile on October 23, 2009.

Telephone inquiries concerning this decision should be directed to April M. Wise at 571-272-1642. All other inquiries concerning the examination or status of this application should be directed to the Technology Center.

This application is being referred to Technology Center AU 3724 for appropriate action in the normal course of business on the reply received with petition.

/Carl Friedman/
Carl Friedman
Petitions Examiner
Office of Petitions

UNITED STATES PATENT AND TRADEMARK OFFICE

Commissioner for Patents
United States Patent and Trademark Office
P.O. Box 1450
Alexandria, VA 22313-1450
www.uspto.gov

MICHAEL BLAINE BROOKS, PC
P.O. BOX 1630
SIMI VALLEY CA 93062-1630

COPY MAILED

APR 1 5 2008

OFFICE OF PETITIONS

In re Application of	:	
Bruce R. Carter, et al.	:	
Application No. 11/796,880	:	DECISION ON PETITION
Filed: April 30, 2007	:	TO WITHDRAW
Attorney Docket No. 2006 076 USA-NONP	:	FROM RECORD
	:	

This is a decision on the Request to Withdraw as attorney or agent of record under 37 C.F.R. § 1.36(b), filed October 18, 2007.

The request is **DISMISSED** as moot.

A review of the file record indicates that the power of attorney to Michael Blaine Brooks, PC has been revoked by the assignee of the patent application on March 20, 2008. Accordingly, the request to withdraw under 37 C.F.R. § 1.36(b) is moot.

All future communications from the Office will continue to be directed to the below-listed address until otherwise notified by applicant.

Telephone inquires concerning this decision should be directed to undersigned at 571-272- 1642.

April M. Wise
Petitions Examiner
Office of Petitions

cc: SHELLY S. MAURER
CLIFFORD & BROWN
BANK OF AMERICA BUILDING
1430 TRUXTON AVENUE
SUITE 900
BAKERSFIELD, CA 93301-5230

UNITED STATES PATENT AND TRADEMARK OFFICE

UNITED STATES DEPARTMENT OF COMMERCE
United States Patent and Trademark Office
Address: COMMISSIONER FOR PATENTS
P.O. Box 1450
Alexandria, Virginia 22313-1450
www.uspto.gov

APPLICATION NO.	FILING DATE	FIRST NAMED INVENTOR	ATTORNEY DOCKET NO.	CONFIRMATION NO.
11/796,891	04/30/2007	Timothy Beerling	10051597-1	5081

7590 12/11/2009
AGILENT TECHNOLOGIES INC.
INTELLECTUAL PROPERTY ADMINISTRATION,LEGAL DEPT.
MS BLDG. E P.O. BOX 7599
LOVELAND, CO 80537

EXAMINER
SCHNEIDER, CRAIG M

ART UNIT	PAPER NUMBER
3753	

NOTIFICATION DATE	DELIVERY MODE
12/11/2009	ELECTRONIC

DECISION GRANTING PETITION UNDER 37 CFR 1.138(d)

The declaration of express abandonment is recognized

This is in response to the petition under 37 CFR 1.138(d), requesting for a refund of any previously paid search fee and excess claims fee in the above-identified application.

The petition is granted.

The express abandonment is recognized. Any previously paid search fee and excess claims fee are hereby refunded.

Telephone inquiries should be directed to the Office of Data Management at (571) 272-4200.

Betty Powell

Patent Publication Branch
Office of Data Management

FORM PET651G (Rev. 08/07)

UNITED STATES PATENT AND TRADEMARK OFFICE

Commissioner for Patents
United States Patent and Trademark Office
P.O. Box 1450
Alexandria, VA 22313-1450
www.uspto.gov

RG & ASSOCIATES
1103 TWIN CREEKS
STE. 120
ALLEN TX 75013

COPY MAILED
DEC 0 8 2008

In re Application of :
WEBB, Ronald et al. :
Application No. 11/796,914 : DECISION ON PETITION
Filed: April 30, 2007 : TO WITHDRAW
Attorney Docket No. **2006_08_005_PA0DOI** : FROM RECORD

This is a decision on the Request to Withdraw as attorney or agent of record under 37 C.F.R. § 1.36(b), filed November 05, 2008.

The request is **APPROVED**.

A grantable request to withdraw as attorney/agent of record must be signed by every attorney/agent seeking to withdraw or contain a clear indication that one attorney is signing on behalf of another/others. The Office requires the practitioner(s) requesting withdrawal to certify that he, she, or they have: (1) given reasonable notice to the client, prior to the expiration of the response period, that the practitioner(s) intends to withdraw from employment; (2) delivered to the client or a duly authorized representative of the client all papers and property (including funds) to which the client is entitled; and (3) notified the client of any responses that may be due and the time frame within which the client must respond, pursuant 37 CFR 10.40(c).

The request was signed by Raffi Gostanian on behalf of all attorneys of record who are associated with customer No. 67208. All attorneys/agents associated with the Customer Number 67208 have been withdrawn. Applicant is reminded that there is no attorney of record at this time.

The request to change the correspondence address of record is not acceptable as the requested correspondence address is not that of: (1) the first named signing inventor; or (2) an intervening assignee of the entire interest under 37 C.F.R 3.71. All future communications from the Office will be directed to the first named signing inventor at the first copied address below until otherwise properly notified by the applicant.

Telephone inquiries concerning this decision should be directed to Tredelle Jackson at 571-272-2783.

Tredelle D. Jackson
Paralegal Specialist
Office of Petitions

cc: **RONALD WEBB**
8004 GREENSBORO DRIVE
PLANO TX 75025

cc: **SAMSUNG ELECTRONICS CO., LTD.**
416 MAETAN-DOUG, PALDAL-GU
SUWON-CITY KYUNGKI-DO
REPUBLIC OF KOREA

UNITED STATES PATENT AND TRADEMARK OFFICE

Commissioner for Patents
United States Patent and Trademark Office
P.O. Box 1450
Alexandria, VA 22313-1450
www.uspto.gov

TED MASTERS
TED MASTERS & ASSOCIATES, INC.
5121 SPICEWOOD DRIVE
CHARLOTTE, NC 28227-0313

COPY MAILED

DEC 0 9 2009

OFFICE OF PETITIONS

In re Application of
Charles A. DALEY, III
Application No. 11/796,920
Filed: May 1, 2007
Attorney Docket No.

DECISION ON PETITION TO WITHDRAW FROM RECORD

This is a decision on the Request to Withdraw as attorney or agent of record under 37 C.F.R. § 1.36(b), filed September 28, 2009.

The request is **DISMISSED** as moot.

A review of the file record indicates that the power of attorney to **TED MASTERS & ASSOCIATES, INC.** has been revoked by the applicant of the patent application on November 13, 2009. Accordingly, the request to withdraw under 37 C.F.R. § 1.36(b) is moot.

All future communications from the Office will continue to be directed to the below-listed address until otherwise notified by applicant.

Telephone inquires concerning this decision should be directed to the undersigned at 571-272- 7253.

/Monica A. Graves/
Petitions Examiner, Office of Petitions

cc: **CHARLES A. DALEY, III**
P.O. BOX 184, KARON P.O.
T.KARON, A.MUANG, PHUKET, 83100
THAILAND

UNITED STATES PATENT AND TRADEMARK OFFICE

Commissioner for Patents
United States Patent and Trademark Office
P.O. Box 1450
Alexandria, VA 22313-1450
www.uspto.gov

R. CHRISTIAM MACKE
40 EAST 10TH STREET
NEWPORT, KY 41071

COPY MAILED

FEB 09 2009

OFFICE OF PETITIONS

In re Application of	:	
Charles E. **PEMBERTON**	:	
Application No. 11/796,922	:	DECISION ON PETITION
Filed: April 30, 2007	:	TO MAKE SPECIAL UNDER
Attorney Docket No.	:	37 CFR 1.102(c)(1)
	:	

This is a decision on the petition under 37 CFR 1.102(c)(1), filed December 19, 2008, to make the above-identified application special based on applicant's age as set forth in M.P.E.P. § 708.02, Section IV.

The petition is **GRANTED**.

A grantable petition to make an application special under 37 CFR 1.102(c)(1) and MPEP § 708.02, Section IV: Applicant's Age must be accompanied by evidence showing that at least one of the applicants is 65 years of age, or more, such as a birth certificate or a statement by applicant. No fee is required

The instant petition includes the affidavit of inventor Charles Edward Pemberton, attesting to his age. Accordingly, the above-identified application has been accorded "special" status.

Inquiries concerning either the examination or status of the application should be directed to the Technology Center at 571-272-3700.

Telephone inquiries concerning this decision should be directed to the undersigned at 571-272-7253.

The application is being forwarded to the Technology Center Art Unit 3715 for action on the merits commensurate with this decision.

/Monica A. Graves/
Petitions Examiner, Office of Petitions

UNITED STATES PATENT AND TRADEMARK OFFICE

UNITED STATES DEPARTMENT OF COMMERCE
United States Patent and Trademark Office
Address: COMMISSIONER FOR PATENTS
P.O. Box 1450
Alexandria, Virginia 22313-1450
www.uspto.gov

APPLICATION NO.	FILING DATE	FIRST NAMED INVENTOR	ATTORNEY DOCKET NO.	CONFIRMATION NO.
11/796,949	04/30/2007	Junichi Takahashi	07252/LH	4997

7590 07/15/2009
FRISHAUF, HOLTZ, GOODMAN & CHICK, PC
220 Fifth Avenue
16TH Floor
NEW YORK, NY 10001-7708

EXAMINER
BOST, DWAYNE D

ART UNIT	PAPER NUMBER
2617	

MAIL DATE	DELIVERY MODE
07/15/2009	PAPER

DECISION GRANTING PETITION UNDER 37 CFR 1.138(d)

The declaration of express abandonment is recognized

This is in response to the petition under 37 CFR 1.138(d), requesting for a refund of any previously paid search fee and excess claims fee in the above-identified application.

The petition is granted.

The express abandonment is recognized. Any previously paid search fee and excess claims fee are hereby refunded.

Telephone inquiries should be directed to the Office of Data Management at (571) 272-4200.

Betty Powell

Patent Publication Branch
Office of Data Management

Adjustment date: 07/16/2009 BPOWELL
05/02/2007 HDESTA1 00000030 11796949
02 FC:1111 -500.00 OP

Adjustment date: 07/16/2009 BPOWELL
05/02/2007 HLESTA1 00000030 11796949
02 FC:1111 -500.00 OP

FORM PET651G (Rev. 08/07)

Refund Ref: 07/16/2009 0030072268

Credit Card Refund Total: $500.00

AB Exp..: XXXXXXXXXXX1013

UNITED STATES PATENT AND TRADEMARK OFFICE

Commissioner for Patents
United States Patent and Trademark Office
P.O. Box 1450
Alexandria, VA 22313-1450
www.uspto.gov

COPY MAILED

AUG 2 3 2007

OFFICE OF PETITIONS

SEYFARTH SHAW LLP
131 S. DEARBORN ST., SUITE2400
CHICAGO IL 60603-5803

In re Application of	:	
George H. Gerstman	:	
Application No. 11/796,963	:	DECISION ON PETITION
Filed: April 30, 2007	:	TO MAKE SPECIAL UNDER
Attorney Docket No. Gerstman 400200	:	37 CFR 1.102(c)(1)
	:	

This is a decision on the petition under 37 CFR 1.102(c)(1), filed May 30, 2007, to make the above-identified application special based on applicant's age as set forth in M.P.E.P. § 708.02, Section IV.

The petition is **GRANTED**.

A grantable petition to make an application special under 37 CFR 1.102(c)(1) and MPEP § 708.02, Section IV: Applicant's Age, must be accompanied by evidence showing that at least one of the applicants is 65 years of age, or more, such as a birth certificate or a statement by applicant. No fee is required.

The instant petition includes a statement from the applicant declaring that he is 65 years of age or older. Accordingly, the above-identified application has been accorded "special" status.

Telephone inquiries concerning this decision should be directed to Terri Williams at 571-272-2991.

All other inquiries concerning either the examination or status of the application should be directed to the Technology Center.

The application is being forwarded to the Technology Center Art Unit 2622 for action on the merits commensurate with this decision.

T. Williams

Terri Williams
Petitions Examiner
Office of Petitions

UNITED STATES PATENT AND TRADEMARK OFFICE

Commissioner for Patents
United States Patent and Trademark Office
P.O. Box 1450
Alexandria, VA 22313-1450
www.uspto.gov

MELVIN K. SILVERMAN AND ASSOCS PC
500 WEST CYPRESS CREEK ROAD
SUITE 350
FT. LAUDERDALE FL 33309

COPY MAILED

MAR 0 4 2008

OFFICE OF PETITIONS

In re Application of	:	
GIAMPAPA, Vincent C.	:	
Application No. 11/796,966	:	DECISION ON PETITION
Filed: May 30, 2007	:	TO WITHDRAW
Attorney Docket No. **425.123.1**	:	FROM RECORD
	:	

This is a decision on the Request to Withdraw as attorney or agent of record under 37 C.F.R. § 1.36(b), filed January 02, 2008.

The request is **NOT APPROVED**.

A grantable request to withdraw as attorney/agent of record must be signed by every attorney/agent seeking to withdraw or contain a clear indication that one attorney is signing on behalf of another/others. A request to withdraw will not be approved unless at least 30 (thirty) days would remain between the date of approval and the later of the expiration date of a time to file a response or the expiration date of the maximum time period which can be extended under 37 C.F.R. § 1.136(a).

The request cannot be approved because no reasons for withdrawal have been provided. The Office cannot, at this time, determine whether practitioner's request is one of the mandatory or permissive reasons enumerated in 37 CFR 10.40. Any subsequent requests must include reasons for withdrawal. Please note that there is a space provided for on PTO/SB/83 (Request to Withdraw as Attorney or Agent) to supply practitioner's reasons.

All future communications from the Office will continue to be directed to the above-listed address until otherwise notified by applicant.

Telephone inquiries concerning this decision should be directed to Tredelle Jackson at 571-272- 2783.

Monica A. Graves
Petitions Examiner
Office of Petitions

cc: **SURACELL, INC.**
41 WATCHUNG PLAZA, #316
MONTCLAIR, NJ 07042

UNITED STATES PATENT AND TRADEMARK OFFICE

Commissioner for Patents
United States Patent and Trademark Office
P.O. Box 1450
Alexandria, VA 22313-1450
www.uspto.gov

MELVIN K. SILVERMAN AND ASSOCS PC
500 WEST CYPRESS CREEK ROAD
SUITE 350
FT. LAUDERDALE FL 33309

COPY MAILED

APR 1 0 2008

OFFICE OF PETITIONS

In re Application of

GIAMPAPA, Vincent C.
Application No. 11/796,966
Filed: April 30, 2007
Attorney Docket No. **425.123.1**

DECISION ON PETITION
TO WITHDRAW
FROM RECORD

This is a decision on the Request to Withdraw as attorney or agent of record under 37 C.F.R. § 1.36(b), filed March 10, 2008.

The request is **APPROVED**.

A grantable request to withdraw as attorney/agent of record must be signed by every attorney/agent seeking to withdraw or contain a clear indication that one attorney is signing on behalf of another/others. A request to withdraw will not be approved unless at least 30 (thirty) days would remain between the date of approval and the later of the expiration date of a time to file a response or the expiration date of the maximum time period which can be extended under 37 C.F.R. § 1.136(a).

The request was signed by Melvin Silverman on behalf of all attorneys of record who are associated with customer No. 27353. All attorneys/agents associated with the Customer Number 27353 have been withdrawn. Applicant is reminded that there is no attorney of record at this time.

The request to change the correspondence of record is not acceptable as the requested correspondence address is not that of: (1) the first named signing inventor; or (2) an intervening assignee of the entire interest under 37 C.F.R 3.71. All future communications from the Office will be directed to the first named signing inventor at the first copied address below until otherwise properly notified by the applicant.

Telephone inquiries concerning this decision should be directed to Tredelle Jackson at 571-272-2783.

Tredelle D. Jackson
Petitions Examiner
Office of Petitions

cc: **VINCENT C. GIAMPAPA**
12 ROBINWOOD DRIVE
LITTLE FALLS, NJ 07424

cc: **SURACELL, INC.**
41 WATCHUNG PLAZA, #316
MONTCLAIR, NJ 07042

UNITED STATES PATENT AND TRADEMARK OFFICE

UNITED STATES DEPARTMENT OF COMMERCE
United States Patent and Trademark Office
Address: COMMISSIONER FOR PATENTS
P.O. Box 1450
Alexandria, Virginia 22313-1450
www.uspto.gov

Brinks Hofer Gilson & Lione/Seiko Instruments Inc.
P.O. Box 10395
Chicago, IL 60611

Mail Date: 04/21/2010

Applicant	: Toshio Doi	: DECISION ON REQUEST FOR
Patent Number	: 7571639	: RECALCULATION of PATENT
Issue Date	: 08/11/2009	: TERM ADJUSTMENT IN VIEW
Appliction No	: 11/796,996	: OF WYETH
Filed	: 04/27/2007	:
		:

The Patentee's Request for Recalculation is **DISMISSED.**

This Request is deemed ineligible for consideration for one or more of the following reasons:

(A). The patent for which PTA recalculation is requested is either a design or reissue application or is a reexamination proceeding;

(B). The patent for which PTA recalculation is requested resulted from a utility or plant application filed under 35 USC 111(a) before May 29, 2000 and no CPA filed in the application on/after May 29, 2000;

(C). The patent for which PTA recalculation is requested resulted from an international application in which the international filing date was before May 29, 2000 and no CPA filed in the application on/after May 29, 2000;

(D). The patent for which PTA recalculation is requested issued on/after March 2, 2010;

(E). The Request for Recalculation was filed more than 180 days after the grant date of the patent and the request was not filed within two months of a dismissal of a request for reconsideration of the of the patent term under 37 CFR 1.705(d);

(F). The Request for Recalculation is not solely limited to USPTO pre-Wyeth interpretation of 35 U.S.C. 154(b)(2)(A);

or

(G). A civil action was filed pursuant to 35 U.S.C. 154(b)(4)(A)concerning the same patent at issue in this request.

Patentee may file a reply to this decision dismissing the Request for Recalculation. Patentee must file such reply within one month or thirty days, whichever is longer, of the mail date of the decision dismissing the Request for Recalculation. No fee is required if patentee is asserting in the reply that the dismissal for ineligibility is improper.

Patentee should use document code PET.OP if electronically filing a reply to this dismissal. If the USPTO finds that the request was improperly deemed ineligible, the USPTO will mail applicant a recalculation determination.

Patentee should be aware that in order to preserve the right to review in the United States District Court for the District of Columbia of the USPTO patent term adjustment determination, patentee must ensure that he or she also take the steps required under 35 U.S.C. 154(b)(4)(A). Nothing in the request for recalculation should be construed as providing an alternative time frame for commencing a civil action under 35 U.S.C. 154 (b)(4)(A).

Any questions concerning this decision should be directed to the Office of Patent Legal Administration at 571-272-7702.

UNITED STATES PATENT AND TRADEMARK OFFICE

UNITED STATES DEPARTMENT OF COMMERCE
United States Patent and Trademark Office
Address: COMMISSIONER FOR PATENTS
P.O. Box 1450
Alexandria, Virginia 22313-1450
www.uspto.gov

Brinks Hofer Gilson & Lione/Seiko Instruments Inc.
P.O. Box 10395
Chicago, IL 60611

Mail Date: 05/18/2010

Applicant : Toshio Doi
Patent Number : 7571639
Issue Date : 08/11/2009
Application No : 11/796,996
Filed : 04/27/2007

: NOTICE CONCERNING IMPROPER
: DISMISSAL OF THE REQUEST
: FOR RECALCULATION OF
: PATENT TERM ADJUSTMENT
: IN VIEW OF WYETH

The United States Patent and Trademark Office (USPTO) discovered that in processing the recent recalculation decisions mailed in response to patentee's filed Request for Recalculation of Patent Term Adjustment in view of Wyeth, the USPTO mistakenly dismissed a small number of requests as ineligible. The dismissals involve requests that were filed on February 9-12, 2010, for patents that were granted on August 11, 2009. Any request that was filed on February 8, 2010 was properly deemed eligible for patent term adjustment (PTA) and was recalculated.

Patents meeting the above criteria were eligible because the USPTO was closed February 8-11, 2010, due to a snowstorm. See Closing of the United States Patent and Trademark Office from Monday February, 8, 2010, through Thursday, February 11, 2010, 1352 *Off. Gaz. Pat. Office* 146 (March 16, 2010). The Office considered each day from Monday, February 8, 2010, through Thursday, February 11, 2010, to be a "Federal holiday within the District of Columbia" under 35 U.S.C. § 21(b) and 37 CFR 1.6, 1.7, 1.9, 2.2(d), 2.195 and 2.196. Any actions that were due from Monday, February, 8, 2010, through Thursday, February 11, 2010, (or the preceding Saturday (February 6, 2010) or Sunday (February 7, 2010)) will be considered timely if the action was taken on the next succeeding business day on which the USPTO was open, which was February 12, 2010.

This notice **VACATES** the previous mailed decision in the patented file that deemed patentee ineligible for the request for recalculation. Patentee's request for recalculation is GRANTED.

The patent term adjustment has been determined to be **232** days. The USPTO will *sua sponte* issue a certificate of correction reflecting the amount of PTA days determined by the recalculation.

Prior to the issuance of the certificate of correction, the USPTO will afford patentee an opportunity to be heard and request reconsideration. Accordingly, patentee has **one month or thirty (30) days** from the mail date of this notice, whichever is longer, to file a request for reconsideration of this PTA calculation. See 35 U.S.C. § 154(b)(3)(B)(ii) and 37 CFR 1.322(a)(4).

Patentee should use document code PET.OP if electronically filing a request for reconsideration of this PTA calculation. The patentee must also include the information required by 37 CFR 1.705(b)(2) and the fee required by 37 CFR 1.18(e). If patentee does not file a timely request for reconsideration of this PTA calculation, including the information required by 37 CFR 1.705(b)(2) and the fee required by 37 1.18(e), the USPTO will issue a certificate of correction reflecting the PTA determination noted above.

Patentee should be aware that in order to preserve the right of review of the USPTO's PTA deterimation in the United States District Court for the District of Columbia, patentee must ensure that the steps required under 35 U.S.C. § 154(b)(4) are taken in a timely manner. Nothing in the request for recalculation should be construed as providing an alternative time frame for commencing a civil action under 35 U.S.C. § 154(b)(4).

UNITED STATES PATENT AND TRADEMARK OFFICE

UNITED STATES DEPARTMENT OF COMMERCE
United States Patent and Trademark Office
Address: COMMISSIONER FOR PATENTS
P.O. Box 1450
Alexandria, Virginia 22313-1450
www.uspto.gov

Brinks Hofer Gilson & Lione/Seiko Instruments Inc.
P.O. Box 10395
Chicago, IL 60611

Mail Date: 04/21/2010

Applicant	: Kokoro Kato	: DECISION ON REQUEST FOR
Patent Number	: 7644387	: RECALCULATION of PATENT
Issue Date	: 01/05/2010	: TERM ADJUSTMENT IN VIEW
Appliction No	: 11/796,997	: OF WYETH AND NOTICE OF INTENT TO
Filed	: 04/27/2007	: ISSUE CERTIFICATE OF CORRECTION
		:

The Request for Recalculation is **GRANTED** to the extent indicated.

The patent term adjustment has been determined to be **460** days. The USPTO will *sua sponte* issue a certificate of correction reflecting the amount of PTA days determined by the recalculation.

Prior to the issuance of the certificate of correction, the USPTO will afford patentee an opportunity to be heard and request reconsideration. Accordingly, patentee has **one month or thirty (30) days**, whichever is longer, to file a request for reconsideration of this patent term adjustment calculation. See 35 U.S.C. 154(b)(3)(B)(ii) and 37 CFR 1.322(a)(4). No extensions of time will be granted under 37 CFR 1.136.

Patentee should use document code PET.OP if electronically filing a request for reconsideration of this patent term adjustment calculation. The patentee must also include the information required by 37 CFR 1.705(b)(2) and the fee required by 37 CFR 1.18(e). If patentee does not file a timely request for reconsideration of this patent term adjustment calculation including the information required by 37 CFR 1.705(b)(2) and the fee required by 37 CFR 1.18(e), the USPTO will issue a certificate of correction reflecting the PTA determination noted above.

Patentee should be aware that in order to preserve the right to review in the United States District Court for the District of Columbia of the USPTO patent term adjustment determination, patentee must ensure that he or she also take the steps required under 35 U.S.C. 154(b)(4)(A) in a timely manner. Nothing in the request for recalculation should be construed as providing an alternative time frame for commencing a civil action under 35 U.S.C. 154(b)(4)(A).

Any questions concerning this decision should be directed to the Office of Patent Legal Administration at 571-272-7702.

UNITED STATES PATENT AND TRADEMARK OFFICE

Commissioner for Patents
United States Patent and Trademark Office
P.O. Box 1450
Alexandria, VA 22313-1450
www.uspto.gov

NEILDS & LEMACK
176 EAST MAIN STREET, SUITE7
WESTBORO, MA 01581

COPY MAILED

SEP 18 2007

OFFICE OF PETITIONS

In re Application of	:	
ABERG, A. K. et al.	:	
Application No. 11/796,998	:	DECISION ON PETITION
Filed: April 30, 2007	:	TO MAKE SPECIAL UNDER
Attorney Docket No. **55P017Cont.**	:	37 CFR 1.102(c)(1)
	:	

This is a decision on the petition under 37 CFR 1.102(c)(1), filed July 05, 2007, to make the above-identified application special based on applicant's age as set forth in M.P.E.P. § 708.02, Section IV.

The petition is **GRANTED**.

A grantable petition to make an application special under 37 CFR 1.102(c)(1) and MPEP § 708.02, Section IV: Applicant's Age must be accompanied by evidence showing that at least one of the applicants is 65 years of age, or more, such as a birth certificate or a statement by applicant. No fee is required

The instant petition includes a copy of Gunner Aberg's driver's license attesting to his age. Accordingly, the above-identified application will be accorded "special" status.

Telephone inquiries concerning this decision should be directed to Tredelle Jackson at 571-272-2783.

All other inquiries concerning either the examination or status of the application should be directed to the Technology Center.

This application is being referred to the Office of Initial Patent Examination for processing.
This application will be accorded "special" status when pre-examination processing is done.

Monica A. Graves
Petitions Examiner
Office of Petitions

UNITED STATES PATENT AND TRADEMARK OFFICE

UNITED STATES DEPARTMENT OF COMMERCE
United States Patent and Trademark Office
Address: COMMISSIONER FOR PATENTS
P.O. Box 1450
Alexandria, Virginia 22313-1450
www.uspto.gov

Juan Carlos A. Marquez
c/o Stites & Harbison PLLC
1199 North Fairfax Street
Suite 900
Alexandria, VA 22314-1437

Mail Date: 04/21/2010

Applicant	: Keiro Muro	: DECISION ON REQUEST FOR
Patent Number	: 7668684	: RECALCULATION of PATENT
Issue Date	: 02/23/2010	: TERM ADJUSTMENT IN VIEW
Appliction No	: 11/797,035	: OF WYETH AND NOTICE OF INTENT TO
Filed	: 04/30/2007	: ISSUE CERTIFICATE OF CORRECTION
		:

The Request for Recalculation is **GRANTED** to the extent indicated.

The patent term adjustment has been determined to be **11** days. The USPTO will *sua sponte* issue a certificate of correction reflecting the amount of PTA days determined by the recalculation.

Prior to the issuance of the certificate of correction, the USPTO will afford patentee an opportunity to be heard and request reconsideration. Accordingly, patentee has **one month or thirty (30) days**, whichever is longer, to file a request for reconsideration of this patent term adjustment calculation. See 35 U.S.C. 154(b)(3)(B)(ii) and 37 CFR 1.322(a)(4). No extensions of time will be granted under 37 CFR 1.136.

Patentee should use document code PET.OP if electronically filing a request for reconsideration of this patent term adjustment calculation. The patentee must also include the information required by 37 CFR 1.705(b)(2) and the fee required by 37 CFR 1.18(e). If patentee does not file a timely request for reconsideration of this patent term adjustment calculation including the information required by 37 CFR 1.705(b)(2) and the fee required by 37 CFR 1.18(e), the USPTO will issue a certificate of correction reflecting the PTA determination noted above.

Patentee should be aware that in order to preserve the right to review in the United States District Court for the District of Columbia of the USPTO patent term adjustment determination, patentee must ensure that he or she also take the steps required under 35 U.S.C. 154(b)(4)(A) in a timely manner. Nothing in the request for recalculation should be construed as providing an alternative time frame for commencing a civil action under 35 U.S.C. 154(b)(4)(A).

Any questions concerning this decision should be directed to the Office of Patent Legal Administration at 571-272-7702.

UNITED STATES PATENT AND TRADEMARK OFFICE

Commissioner for Patents
United States Patent and Trademark Office
P.O. Box 1450
Alexandria, VA 22313-1450
www.uspto.gov

Edward E. Roberts
P.O. Box 3206
Dana Point CA 92629

COPY MAILED

OCT 12 2007

OFFICE OF PETITIONS

In re Application of	:	
Robert S. Saari	:	
Application No. 11/797,112	:	DECISION ON PETITION
Filed: May 1, 2007	:	TO MAKE SPECIAL UNDER
Attorney Docket No. 07RSS-01	:	37 CFR 1.102(c)(1)
	:	

This is a decision on the petition under 37 CFR 1.102(c)(1), filed May 1, 2007, to make the above-identified application special based on applicant's age as set forth in M.P.E.P. § 708.02, Section IV.

The petition is **GRANTED**.

A grantable petition to make an application special under 37 CFR 1.102(c)(1) and MPEP § 708.02, Section IV: Applicant's Age must be accompanied by evidence showing that at least one of the applicants is 65 years of age, or more, such as a birth certificate or a statement by applicant. No fee is required

The instant petition includes a copy of the applicant's driver's license proving that he is 65 years of age or older. Accordingly, the above-identified application has been accorded "special" status.

Telephone inquiries concerning this decision should be directed to Terri Williams at 571-272-2991.

All other inquiries concerning either the examination or status of the application should be directed to the Technology Center.

The application is being forwarded to the Technology Center Art Unit 3747 for action on the merits commensurate with this decision.

T. Williams

Terri Williams
Petitions Examiner
Office of Petitions

UNITED STATES PATENT AND TRADEMARK OFFICE

Commissioner for Patents
United States Patent and Trademark Office
P.O. Box 1450
Alexandria, VA 22313-1450
www.uspto.gov

KILPATRICK STOCKTON LLP
1100 Peachtree Street
Suite 2800
ATLANTA GA 30309

COPY MAILED

FEB 2 9 2008

OFFICE OF PETITIONS

In re Application of

HACH, Gregory et al.
Application No. 11/797,149
Filed: May 01, 2007
Attorney Docket No. **HRX0001**

DECISION ON PETITION
TO WITHDRAW
FROM RECORD

This is a decision on the Request to Withdraw as attorney or agent of record under 37 C.F.R. § 1.36(b), filed November 12, 2007.

The request is **NOT APPROVED**.

A grantable request to withdraw as attorney/agent of record must be signed by every attorney/agent seeking to withdraw or contain a clear indication that one attorney is signing on behalf of another/others. A request to withdraw will not be approved unless at least 30 (thirty) days would remain between the date of approval and the later of the expiration date of a time to file a response or the expiration date of the maximum time period which can be extended under 37 C.F.R. § 1.136(a).

The Office cannot approve the request at this time since the reasons provided do not meet any of the conditions under the mandatory or permissive categories enumerated in 37 CFR 10.40. Section 10.40 of Title 37 of the Code of Federal Regulation states, "[a] practitioner shall not withdraw from employment in a proceeding before the Office without permission from the Office[.]" More specifically, 37 CFR 10.40 states, "[i]f paragraph (b) of this section is not applicable, a practitioner may not request permission to withdraw in matter pending before the Office unless such request or such withdrawal is" for one the permissive reasons listed in 37 CFR 10.40(c). The reasons set forth in the request, client has not responded to our correspondence, does not meet any of the conditions set forth in 37 CFR 10.40.

All future communications from the Office will continue to be directed to the above-listed address until otherwise notified by applicant.

Telephone inquiries concerning this decision should be directed to Tredelle Jackson at 571-272- 2783.

Monica A. Graves
Petitions Examiner
Office of Petitions

cc: **HACH & ROSE**
185 MADISON AVENUE
8th FLOOR
NEW YORK, NY 10016

UNITED STATES PATENT AND TRADEMARK OFFICE

Commissioner for Patents
United States Patent and Trademark Office
P.O. Box 1450
Alexandria, VA 22313-1450
www.uspto.gov

MAIL

JUN 12 2008

DIRECTOR'S OFFICE
TECHNOLOGY CENTER 2600

BIRCH STEWART KOLASCH & BIRCH
PO BOX 747
FALLS CHURCH VA 22040-0747

In re Application of	:	
KIM, TAE HUN	:	DECISION ON REQUEST TO
Application No. 11/797,171	:	PARTICIPATE IN PATENT
Filed: May 1, 2007	:	PROSECUTION HIGHWAY
Attorney Docket No. 2832-0321PUS1	:	PILOT PROGRAM AND PETITION
	:	TO MAKE SPECIAL UNDER
	:	37 CFR 1.102(d)

This is a decision on the request to participate in the Patent Prosecution Highway (PPH) pilot program and the petition under 37 CFR 1.102(d), filed May 23, 2008, to make the above-identified application special.

The request and petition are **GRANTED**.

A grantable request to participate in the PPH pilot program and petition to make special require:

(1) The U.S. application must validly claim priority under 35 U.S.C. 119(a) to one or more applications filed in the KIPO;
(2) Applicant must submit a copy of the allowable/patentable claim(s) from the KIPO application(s) along with an English translation thereof and a statement that the English translation is accurate;
(3) All the claims in the U.S. application must sufficiently correspond or be amended to sufficiently correspond to the allowable/patentable claim(s) in the KIPO application(s);
(4) Examination of the U.S. application has not begun;
(5) Applicant must submit a copy of all the office actions from each of the KIPO application(s) containing the allowable/patentable claim(s) along with an English translation thereof and a statement that the English translation is accurate;
(6) Applicant must submit an IDS listing the documents cited by the KIPO examiner in the KIPO office action along with copies of documents except U.S. patents or U.S. patent application publications; and
(7) The required petition fee under 37 CFR 1.17(h).

The request to participate in the PPH pilot program and petition comply with the above requirements. Accordingly, the above-identified application has been accorded "special" status.

Telephone inquiries concerning this decision should be directed to Kenneth Wieder at 571-272-2986.

All other inquiries concerning the examination or status of the application should be directed to Patent Application Information Retrieval (PAIR) system.

The application is being forwarded to the examiner for action on the merits commensurate with this decision.

Kenneth Wieder
Quality Assurance Specialist
Technology Center 2600
Communications

UNITED STATES PATENT AND TRADEMARK OFFICE

UNITED STATES DEPARTMENT OF COMMERCE
United States Patent and Trademark Office
Address: COMMISSIONER FOR PATENTS
P.O. Box 1450
Alexandria, Virginia 22313-1450
www.uspto.gov

Juan Carlos A. Marquez
c/o Stites & Harbison PLLC
1199 North Fairfax Street
Suite 900
Alexandria, VA 22314-1437

Mail Date: 04/21/2010

Applicant	: Toshihiro Sato	: DECISION ON REQUEST FOR
Patent Number	: 7667674	: RECALCULATION of PATENT
Issue Date	: 02/23/2010	: TERM ADJUSTMENT IN VIEW
Appliction No	: 11/797,190	: OF WYETH AND NOTICE OF INTENT TO
Filed	: 05/01/2007	: ISSUE CERTIFICATE OF CORRECTION
		:

The Request for Recalculation is **GRANTED** to the extent indicated.

The patent term adjustment has been determined to be **0** days. The USPTO will *sua sponte* issue a certificate of correction reflecting the amount of PTA days determined by the recalculation.

Prior to the issuance of the certificate of correction, the USPTO will afford patentee an opportunity to be heard and request reconsideration. Accordingly, patentee has **one month or thirty (30) days**, whichever is longer, to file a request for reconsideration of this patent term adjustment calculation. See 35 U.S.C. 154(b)(3)(B)(ii) and 37 CFR 1.322(a)(4). No extensions of time will be granted under 37 CFR 1.136.

Patentee should use document code PET.OP if electronically filing a request for reconsideration of this patent term adjustment calculation. The patentee must also include the information required by 37 CFR 1.705(b)(2) and the fee required by 37 CFR 1.18(e). If patentee does not file a timely request for reconsideration of this patent term adjustment calculation including the information required by 37 CFR 1.705(b)(2) and the fee required by 37 CFR 1.18(e), the USPTO will issue a certificate of correction reflecting the PTA determination noted above.

Patentee should be aware that in order to preserve the right to review in the United States District Court for the District of Columbia of the USPTO patent term adjustment determination, patentee must ensure that he or she also take the steps required under 35 U.S.C. 154(b)(4)(A) in a timely manner. Nothing in the request for recalculation should be construed as providing an alternative time frame for commencing a civil action under 35 U.S.C. 154(b)(4)(A).

Any questions concerning this decision should be directed to the Office of Patent Legal Administration at 571-272-7702.

UNITED STATES PATENT AND TRADEMARK OFFICE

Commissioner for Patents
United States Patent and Trademark Office
P.O. Box 1450
Alexandria, VA 22313-1450
www.uspto.gov

FOLEY AND LARDNER LLP
SUITE 500
3000 K STREET NW
WASHINGTON DC 20007

COPY MAILED

AUG 3 1 2009

OFFICE OF PETITIONS

In re Application of
Magnus Hivert
Application No. 11/797,207
Filed: May 1, 2007
Attorney Docket No. 088984-0101

DECISION ON PETITION

This is a decision on the petition under 37 CFR 1.182, filed May 23, 2008, to change the name of inventor "Magnus Larsson" to – Magnus Hivert --.

The petition is **GRANTED**.

Office records have been updated to reflect the inventor's change of name. A corrected Filing Receipt, which reflects the inventor's change of name, accompanies this decision on petition.

Any questions concerning this matter may be directed to the undersigned at (571) 272-3208. Any questions concerning the examination procedures or status of the application should be directed to the Technology Center.

This application is being referred to Technology Center AU 1793 to await a reply to the nonfinal rejection mailed August 7, 2009.

/KOC/
Karen Creasy
Petitions Examiner
Office of Petitions

ATTACHMENT: Corrected Filing Receipt

UNITED STATES PATENT AND TRADEMARK OFFICE

Commissioner for Patents
United States Patent and Trademark Office
P.O. Box 1450
Alexandria, VA 22313-1450
www.uspto.gov

NIXON PEABODY LLP
401 9TH STREET NW
SUITE 900
WASHINGTON DC 20004-2128

COPY MAILED
SEP 22 2008
OFFICE OF PETITIONS

In re Application of	:	
Kartik Muralidharan	:	
Application No. 11/797,208	:	ON PETITION
Filed: May 1, 2007	:	
Attorney Docket No. 042144-16	:	

This is a decision on the petition to revive under 37 CFR 1.137(b), filed August 12, 2008.

The petition under 37 CFR 1.137(b) is **GRANTED**.

The above-identified application became abandoned for failure to timely file a reply in response to the Notice to File Missing Parts of Nonprovisional Application, mailed May 30, 2007. This Notice set an extendable period for reply of two (2) months for applicant to submit an executed oath or declaration, together with the $130 surcharge for its late filing, statutory filing fee, and additional claims fee. No reply having been received, the application became abandoned on July 31, 2007. A Notice of Abandonment was mailed on August 11, 2008.

With the instant petition, applicant paid the petition fee, made the proper statement of unintentional delay, and submitted the required reply in the form of a declaration, surcharge, and fees.

The matter is being forwarded to the Office of Patent Application Processing for pre-examination processing.

Telephone inquiries related to this decision should be directed to the undersigned at (571)272-3207.

Cliff Congo
Petitions Attorney
Office of Petitions

UNITED STATES PATENT AND TRADEMARK OFFICE

Commissioner for Patents
United States Patent and Trademark Office
P.O. Box 1450
Alexandria, VA 22313-1450
www.uspto.gov

SIEMENS CORPORATION
INTELLECTUAL PROPERTY DEPARTMENT
170 WOOD AVENUE SOUTH
ISELIN NJ 08830

COPY MAILED

MAY 22 2008

OFFICE OF PETITIONS

In re Application of	:	
Bruscoe et al.	:	
Application No. 11/797,268	:	DECISION ON PETITION
Filed: May 2, 2007	:	
Attorney Docket No. 2006P09091 US01	:	

This is a decision on the petition under the unintentional provisions of 37 CFR 1.137(b), filed February 19, 2008, to revive the above-identified application.

The petition is **GRANTED**.

The application became abandoned for failure to reply in a timely manner to the Notice to File Missing Parts of Non-provisional Application (Notice), mailed May 29, 2007. The Notice set a period for reply of two (2) months from the mail date of the Notice. No extensions of time under the provisions of 37 CFR 1.136(a) were obtained. Accordingly, the application became abandoned on July 30, 2007.

The petition satisfies the requirements of 37 CFR 1.137(b) in that petitioner has supplied (1) the reply in the form of acceptable line drawings and declaration along with $130 surcharge, (2) the petition fee of $1540, and (3) a proper statement of unintentional delay.

Telephone inquiries concerning this decision should be directed to Ramesh Krishnamurthy at (571) 272 - 4914.

This application is being referred to the Office of Patent Application Processing for appropriate action in the normal course of business on the reply received.

David Bucci
Petitions Examiner
Office of Petitions

UNITED STATES PATENT AND TRADEMARK OFFICE

Commissioner for Patents
United States Patent and Trademark Office
P.O. Box 1450
Alexandria, VA 22313-1450
www.uspto.gov

FINNEGAN, HENDERSON, FARABOW,
GARRETT & DUNNER
LLP
901 NEW YORK AVENUE, NW
WASHINGTON DC 20001-4413

COPY MAILED

OCT 05 2007

OFFICE OF PETITIONS

In re Patent of	:	
Yoshida et al.	:	
Application No. 11/797286	:	DECISION
Filing or 371(c) Date: 05/02/2007	:	ON PETITION
Attorney Docket Number:	:	
05225.0260-01000	:	

This is a decision on the "Petition for Date of Deposit Pursuant to 37 C.F.R. § 1.181," filed July 27, 2007, requesting the application be accorded a filing date of May 2, 2007, including page 11 of the specification The petition is properly treated under 37 CFR 1.182. The delay in treating this petition is regretted.

The petition is **granted**.

Background

The application was filed on May 2, 2007. On May 31, 2007, the Office of Initial Patent Examination (OIPE) mailed a Notice to File Corrected Application Papers (hereinafter "Notice") stating, *inter alia*, that the application had been accorded a filing; however, page 11 of the specification appeared to have been omitted from the application.

Applicant files the present petition and avers that page 11 of the specification was included among 40 pages of application filed on May 2, 2007. In support of this assertion, Applicant provides a copy of a return receipt postcard acknowledging receipt of, *inter alia*, 40 pages of application by this Office on May 2, 2007.

"A postcard receipt which itemizes and properly identifies the papers which are being filed serves as *prima facie* evidence of receipt in the PTO of all items listed thereon by the PTO." MPEP § 503.

Accordingly, the petition to accord a filing date of May 2, 2007, including page 11 of the specification, is granted.

The copy of page 11 of the specification, filed with the present petition, will be used for examination purposes.

The petition fee has been refunded to deposit account 06-0916 as authorized in the instant petition.

The application will be returned to the Office of Initial Patent Examination for further processing with a filing date of April 16, 2007, and an indication that page 11 of the specification was included among 40 pages of application filed on May 2, 2007, using page 11 of the specification filed with the present petition.

Telephone inquiries concerning this decision should be directed to the undersigned at (571) 272-3232.

Derek L. Woods
Attorney
Office of Petitions

UNITED STATES PATENT AND TRADEMARK OFFICE

Commissioner for Patents
United States Patent and Trademark Office
P.O. Box 1450
Alexandria, VA 22313-1450
www.uspto.gov

MAILED

JUN 07 2010

OFFICE OF PETITIONS

GOWLING LAFLEUR HENDERSON LLP
SUITE 1600, 1 FIRST CANADIAN PLACE
100 KING STTEET WEST
TORONTO ON M5X 1G5 CA
CANADA

In re Application of	:	
Mike Schmidt et al	:	
Application No. 11/797,316	:	DECISION ON PETITION
Filed: May 2, 2007	:	
Attorney Docket No. T8468309US4CON	:	

This is a decision on the petition, filed April 7, 2010, under 37 CFR 1.181(a) to Withdraw Holding of Abandonment.

The petition under 37 CFR 1.181(a) is **GRANTED**.

The application was held abandoned for failure to timely reply to the Office action mailed August 7, 2009.

The petition states that a reply was timely submitted on February 8, 2010 (February 7, 2010 being a Sunday). To support this assertion, the petitioner has submitted a copy of the response, along with a copy of a facsimile transmission with a receipt date of February 8, 2010 in the USPTO. Additionally, a review of the record for the above identified application indicates receipt of the response (Notice of Appeal/Extension of time/fee) on February 8, 2010.

In view of the above, the holding of abandonment is hereby withdrawn and the application restored to pending status. Also, a petition matter under 37 CFR 1.137(b) is not necessary.

Telephone inquiries concerning this decision should be directed to the undersigned at (571) 272-3208.

This application is being referred to Technology Center AU 3687 to await the filing of an Appeal Brief or other response in view of the Notice of Appeal received February 8, 2010.

/KOC/
Karen Creasy
Petitions Examiner
Office of Petitions

UNITED STATES PATENT AND TRADEMARK OFFICE

Commissioner for Patents
United States Patent and Trademark Office
P.O. Box 1450
Alexandria, VA 22313-1450
www.uspto.gov

DRINKER BIDDLE & REATH (DC)
1500 K STREET, N.W.
SUITE 1100
WASHINGTON DC 20005-1209

MAILED

APR 07 2010

OFFICE OF PETITIONS

In re Application of	:	
Hammond et al.	:	DECISION ON PETITION
Application No. 11/797,318	:	TO WITHDRAW
Filed: May 2, 2007	:	FROM RECORD
Attorney Docket No. 200708-0004-01	:	

This is a decision on the Request to Withdraw as attorney or agent of record under 37 C.F.R. § 1.36(b), filed February 3, 2010.

The request is **APPROVED**.

A grantable request to withdraw as attorney/agent of record must be signed by every attorney/agent seeking to withdraw or contain a clear indication that one attorney is signing on behalf of another/others. The Office will require the practitioner(s) to certify that he, she or they have: (1) given reasonable notice to the client, prior to the expiration of the reply period, which the practitioner(s) intends to withdraw from employment; (2) delivered to the client or a duly authorized representative of the client all papers and property (including funds) to which the client is entitled; and (3) notified the client of any replies that may be due and the time frame within which the client must respond, pursuant to 37 CFR 10.40 (c).

The request was signed by Brian Lathrop on behalf of all attorneys of record who are associated with customer No. 55694.

All attorneys/agents associated with the Customer Number 55694 have been withdrawn. Applicants are reminded that there is no attorney of record at this time.

The correspondence address of record remains unchanged.

Currently, there is an outstanding Office action mailed February 4, 2010 that requires a reply.

Telephone inquires concerning this decision should be directed to the undersigned at (571) 272-7751. All other inquires concerning either the examination or status of the application should be directed to the Technology Center.

Joan Olszewski
Petitions Examiner
Office of Petitions

UNITED STATES PATENT AND TRADEMARK OFFICE

COMMISSIONER FOR PATENTS
UNITED STATES PATENT AND TRADEMARK OFFICE
P.O. BOX 1450
ALEXANDRIA, VA 22313-1450
www.uspto.gov

STERNE, KESSLER, GOLDSTEIN & FOX P.L.L.C.
1100 NEW YORK AVENUE, N.W.
WASHINGTON DC 20005

COPY MAILED

JUN 22 2007

OFFICE OF PETITIONS

In re Application of	:	
Woodard, et al.	:	
Filed: May 2, 2007	:	ON PETITION
Application No. 11/797,323	:	
Atty. Dkt. No.: 2272.0920000	:	

This decision is in response to the petition under 37 CFR 1.53(3), filed June 6, 2007, to accord the above-identified application a filing date of May 2, 2007 with five sheets of drawings as part of the original application as filed.

The application was filed May 2, 2007. The Notice mailed May 25, 2007 indicated that the application had not been accorded a filing date because it appeared that the application had been deposited without drawings, as required per 35 USC 113.

In response, the petitioners herein argue that the application as deposited included five sheets of drawings and have presented as proof of mailing and proof of receipt of the drawing pages in question a return postcard date stamped by the Office on May 2, 2007. A copy of drawing sheets purportedly filed with the application was submitted herewith.

The original five sheets of drawings have not been located. However, in view of the evidence presented, the petition to accord the application a filing date of May 2, 2007 is GRANTED.

Since the original of five drawing sheets cannot be located in the Office, the copy submitted herewith will be used for examination purposes.

No petition fee is due in connection with this matter. A refund has been requested from the Finance Office, Refund Section.

This application will be returned to the Office of Initial Patent Examination for further processing with a filing date of May 2, 2007.

Telephone inquiries related to this decision may be directed to the undersigned at (571) 272-3205.

Alesia M. Brown
Petitions Attorney
Office of Petitions

UNITED STATES PATENT AND TRADEMARK OFFICE

Commissioner for Patents
United States Patent and Trademark Office
P.O. Box 1450
Alexandria, VA 22313-1450
www.uspto.gov

13 MAR 2009

Buchanan, Ingersoll, & Rooney PC
Post Office Box 1404
Alexandria, VA 22313-1404

In re Application of:	:	
ITOIGAWA et al.	:	
U.S. Application No.: 11/797,342	:	
Filing Date: May 2, 2007	:	DECISION
Attorney's Docket No.: 1032404-000174	:	
For: HAND DRYER APPARATUS	:	

This is a decision on the petition under 37 CFR 1.78(a)(3) filed December 29, 2008 to accept an unintentionally delayed claim under 35 U.S.C. § 120 and 365(c) for the benefit of priority to the prior-filed international application set forth set forth in the amendment filed concurrently with the instant petition.

The petition is GRANTED.

The present nonprovisional application was filed after November 29, 2000, and the claim herein for the benefit of priority to the prior-filed international application is submitted after expiration of the period specified in 37 CFR 1.78(a)(2)(ii). Therefore, this is a proper petition under 37 CFR 1.78(a)(3).

A petition for acceptance of a claim for late priority under 37 CFR 1.78(a)(3) is only applicable to those application filed on or after November 29, 2000. Further, the petition is appropriate only after the expiration of the period specified in 37 CFR 1.78(a)(2)(ii). In addition, the petition under 37 CFR 1.78(a)(3) must be accompanied by:

(1) the reference required by 35 U.S.C. § 120 and 37 CFR 1.78(a)(2)(i) of the prior-filed application, unless previously submitted;
(2) the surcharge set forth in § 1.17(t); and
(3) a statement that the entire delay between the date the claim was due under 37 CFR 1.78(a)(2)(ii) and the date the claim was filed was unintentional. The Director may require additional information where there is a question whether the delay was unintentional.

The petition complies with the requirements for a grantable petition under 37 CFR 1.78(a)(3) in that (1) a reference to the prior-filed international application has been

included in an amendment filed with present petition, as provided by 37 CFR 1.78(a)(2)(iii); (2) the surcharge fee required by 37 CFR 1.17(t) has been submitted; and (3) the petition contains a proper statement of unintentional delay. Accordingly, having found that the instant petition for acceptance of an unintentionally delayed claim for the benefit of priority under 35 U.S.C. § 120 to the prior-filed international application satisfies the conditions of 37 CFR 1.78(a)(3), the petition is granted.

The granting of the petition to accept the delayed benefit claim to the prior-filed applications under 37 CFR 1.78(a)(3) should not be construed as meaning that this application is entitled to the benefit of the prior-filed application. In order for this application to be entitled to the benefit of the prior-filed application, all other requirements under 35 U.S.C. § 120 and 37 CFR 1.78(a)(1) and (a)(2) must be met. Similarly, the fact that a corrected Filing Receipt includes the prior-filed application should not be construed as meaning that applicant is entitled to the claim for benefit of priority to the prior-filed application noted thereon. Accordingly, the examiner will, in due course, consider this benefit claim and determine whether this application is entitled to the benefit of the earlier filing date.

This matter is being referred to Technology Center Art Unit 3742 for appropriate action on the amendment filed December 29, 2008, including consideration by the examiner of applicant's entitlement to claim benefit of priority under 35 U.S.C. § 120 to the prior filed nonprovisional application.

Any inquiries concerning this decision may be directed to Anthony Smith, Attorney Advisor, at (571) 272-3298. All other inquiries concerning either the examination procedures or status of the application should be directed to the Technology Center.

Bryan Lin

Bryan Lin
Legal Examiner
PCT Legal Administration

UNITED STATES PATENT AND TRADEMARK OFFICE

Commissioner for Patents
United States Patent and Trademark Office
P.O. Box 1450
Alexandria, VA 22313-1450
www.uspto.gov

STAAS & HALSEY LLP
SUITE 700
1201 NEW YORK AVENUE, N.W.
WASHINGTON DC 20005

COPY MAILED
JAN 22 2008
OFFICE OF PETITIONS

In re Application of

Shigeki Fukuta

Application No. 11/797,363

Filed: May 2, 2007

Attorney Docket No. 1448.1164

DECISION ON PETITION

This is a decision on the petition to withdraw the holding of abandonment under 37 CFR 1.181(a), filed January 2, 2008.

The petition is **granted**.

This application was held abandoned July 20, 2007, after no reply was received to the Notice to File Missing Parts of Non-Provisional Application purportedly mailed May 29, 2007. The notice set forth a shortened period of reply of two months from its mailing date. No response was received within the allowable period and the application became abandoned on June 20, 2007. The instant petition was filed on January 2, 2008. Petitioner maintains that the Notice to File Missing Parts of Non-provisional Application was never received and provides a copy of the relevant docketing calendar as proof of the same.

Section 711.03(c)(II) of the *Manual of Patent Examining Procedure* ("MPEP") provides that in order to establish non-receipt of an Office action so as prove that the imposition of a holding of abandonment is improper, petitioner must: 1) provide a statement to the Office indicating that the Office action was not received by petitioner; 2) include in the statement an attestation to the fact that a review of the file jacket and docket records maintained by petitioner indicates that the Office action was not received; and 3) provide a copy of the docket record where the non-received Office communication would have been entered had it been received and docketed.

Petitioner has met the burden of proof as established by Section 711.03(c)(II) of the MPEP. Additionally, a review of the Image File Wrapper for this application did not reveal a Notice to File Missing Parts of Non-provisional Application, although an internal USPTO database indicates that it was mailed on May 9, 2007. The holding of abandonment is, therefore, withdrawn.

The application file is being forwarded to the Office of Patent Application Processing for further processing that may include remailing the Notice to File Missing Parts of Non-provisional Application and resetting of the period for reply.

Questions concerning this decision should be directed to the undersigned at (571) 272-3222.

Kenya A. McLaughlin
Petitions Attorney
Office of Petitions

UNITED STATES PATENT AND TRADEMARK OFFICE

COMMISSIONER FOR PATENTS
UNITED STATES PATENT AND TRADEMARK OFFICE
P.O. BOX 1450
ALEXANDRIA, VA 22313-1450
www.uspto.gov

LITMAN LAW OFFICES, LTD.
POST OFFICE BOX 15035
CRYSTAL CITY STATION
ARLINGTON VA 22215-0035

MAILED

JUN 09 2009

OFFICE OF PETITIONS

Applicant: Al-Gahtani, et al.
Appl. No.: 11/797,369
Filing Date: May 2, 2007
Title: METHOD FOR ELLIPTIC CURVE SCALAR MULTIPLICATION USING PARAMETERIZED PROJECTIVE COORDINATES
Attorney Docket: 18692.15
Pub. No.: US 2008/0273695 A1
Pub. Date: November 6, 2008

This is a decision on the request for a corrected patent application publication under 37 CFR 1.221(b), received on January 2, 2009, for the above-identified application.

The request is DISMISSED.

Applicant requests that the application be republished because the patent application publication contains a material error on the front page of the publication wherein assignee data is missing.

37 CFR 1.221 (b) is applicable "only when the Office makes a material mistake which is apparent from Office records.... Any request for a corrected publication or revised patent application publication other than provided as provided in paragraph (a) of this section must be filed within two months from the date of the patent application publication. This period is not extendable." A material mistake must affect the public's ability to appreciate the technical disclosure of the patent application publication, to determine the scope of the patent application publication, or to determine the scope of the provisional rights that an applicant may seek to enforce upon issuance of a patent. [1]

The error noted by requestor regarding the missing assignment information is not an Office error. The application was correctly published without assignment information, as assignment information was not provided on the transmittal letter and/or application data sheet received on filing.[2]

---

[1] Changes to Implement Eighteen-Month Publication of Patent Applications, 65 FR 57023, 57038 (Sept. 20, 2000), 1239, Off. Gaz. Pat. Office Notices 63, 75 (Oct. 10, 2000) (final rule).

[2] See 37 CFR 1.215(b) and Comment 59, Changes to Implement Eighteen-Month Publication of Patent Applications, 65 FR 57023, 57047 (Sept. 20, 2000), 1239 Off. Gaz. Pat. Office Notices 63, 84 (Oct. 10, 2000) (final rule).

Furthermore, the failure to include the correct assignee on the front page of the published patent application would not be a material mistake because it does not affect the public's ability to appreciate the technical disclosure of the patent application publication, to determine the scope of the patent application publication or to determine the scope of the provisional rights that an applicant may seek to enforce upon issuance of a patent. See MPEP 1130.

Applicant is reminded of his duty to conduct a reasonable inquiry before filing a paper before the Office. See MPEP 410.

Applicants' request for a corrected patent application publication on January 2, 2009, may constitute a "failure to engage in reasonable efforts to conclude processing or examination of the application." See 1.704(c). This determination will be made on or after a mailing of a Notice of Allowance.

Applicants are advised that a "request for republication of an application previously published" may be filed under 37 CFR 1.221(a). Such a request for republication "must include a copy of the application in compliance with the Office electronic filing system requirements and be accompanied by the publication fee set forth in § 1.18(d) and the processing fee set forth in § 1.17(i)." If the request for republication does not comply with the electronic filing system requirements, the republication will not take place and the publication fee set forth in § 1.18(d) will be refunded. The processing fee will be retained.

A guide for filing a request for a Pre-Grant Publication, such as a request for republication, may be found on the link below:

http://www.uspto.gov/ebc/portal/tutorials.htm

Any request for republication under 37 CFR 1.221(a) must be submitted via the EFS system as a "Pre-Grant Publication" and any questions or request for reconsideration of the decision should be addressed as follows:

By mail to: Mail Stop PGPUB
Commissioner for Patents
P.O. Box 1450
Alexandria, Va. 22313-1450

Inquiries relating to this matter may be directed to Mark Polutta at (571) 272-7709.

Mark Polutta
Senior Legal Advisor
Office of Patent Legal Administration
Office of the Deputy Commissioner
for Patent Examination Policy

UNITED STATES PATENT AND TRADEMARK OFFICE

Commissioner for Patents
United States Patent and Trademark Office
P.O. Box 1450
Alexandria, VA 22313-1450
www.uspto.gov

LOWE HAUPTMAN HAM & BERNER, LLP
1700 DIAGONAL ROAD
SUITE 300
ALEXANDRIA VA 22314

COPY MAILED

OCT 1 1 2007

OFFICE OF PETITIONS

In re Application of	:	
Stephen Dupont	:	
Application No. 11/797,382	:	DECISION ON PETITION
Filed: May 3, 2007	:	TO MAKE SPECIAL UNDER
Attorney Docket No. 4930-001	:	37 CFR 1.102(c)(1)
	:	

This is a decision on the petition under 37 CFR 1.102(c)(1), filed July 31, 2007, to make the above-identified application special based on applicant's age as set forth in M.P.E.P. § 708.02, Section IV.

The petition is **GRANTED**.

A grantable petition to make an application special under 37 CFR 1.102(c)(1) and MPEP § 708.02, Section IV: Applicant's Age must be accompanied by evidence showing that at least one of the applicants is 65 years of age, or more, such as a birth certificate or a statement by applicant. No fee is required

The instant petition includes a statement from the applicant declaring that he is 65 years of age or older. Accordingly, the above-identified application has been accorded "special" status.

Telephone inquiries concerning this decision should be directed to Terri Williams at 571-272-2991.

All other inquiries concerning either the examination or status of the application should be directed to the Technology Center.

The application is being forwarded to the Technology Center Art Unit 3747 for action on the merits commensurate with this decision.

T. Williams

Terri Williams
Petitions Examiner
Office of Petitions

UNITED STATES PATENT AND TRADEMARK OFFICE

UNITED STATES DEPARTMENT OF COMMERCE
United States Patent and Trademark Office
Address: COMMISSIONER FOR PATENTS
P.O. Box 1450
Alexandria, Virginia 22313-1450
www.uspto.gov

ANTONELLI, TERRY, STOUT & KRAUS, LLP
1300 NORTH SEVENTEENTH STREET
SUITE 1800
ARLINGTON, VA 22209-3873

Mail Date: 04/21/2010

Applicant	: Tadashi Arai	: DECISION ON REQUEST FOR
Patent Number	: 7575952	: RECALCULATION of PATENT
Issue Date	: 08/18/2009	: TERM ADJUSTMENT IN VIEW
Appliction No	: 11/797,419	: OF WYETH AND NOTICE OF INTENT TO
Filed	: 05/03/2007	: ISSUE CERTIFICATE OF CORRECTION
		:

The Request for Recalculation is **GRANTED** to the extent indicated.

The patent term adjustment has been determined to be **0** days. The USPTO will *sua sponte* issue a certificate of correction reflecting the amount of PTA days determined by the recalculation.

Prior to the issuance of the certificate of correction, the USPTO will afford patentee an opportunity to be heard and request reconsideration. Accordingly, patentee has **one month or thirty (30) days**, whichever is longer, to file a request for reconsideration of this patent term adjustment calculation. See 35 U.S.C. 154(b)(3)(B)(ii) and 37 CFR 1.322(a)(4). No extensions of time will be granted under 37 CFR 1.136.

Patentee should use document code PET.OP if electronically filing a request for reconsideration of this patent term adjustment calculation. The patentee must also include the information required by 37 CFR 1.705(b)(2) and the fee required by 37 CFR 1.18(e). If patentee does not file a timely request for reconsideration of this patent term adjustment calculation including the information required by 37 CFR 1.705(b)(2) and the fee required by 37 CFR 1.18(e), the USPTO will issue a certificate of correction reflecting the PTA determination noted above.

Patentee should be aware that in order to preserve the right to review in the United States District Court for the District of Columbia of the USPTO patent term adjustment determination, patentee must ensure that he or she also take the steps required under 35 U.S.C. 154(b)(4)(A) in a timely manner. Nothing in the request for recalculation should be construed as providing an alternative time frame for commencing a civil action under 35 U.S.C. 154(b)(4)(A).

Any questions concerning this decision should be directed to the Office of Patent Legal Administration at 571-272-7702.

UNITED STATES PATENT AND TRADEMARK OFFICE

Commissioner for Patents
United States Patent and Trademark Office
P.O. Box 1450
Alexandria, VA 22313-1450
www.uspto.gov

FOLEY AND LARDNER LLP
SUITE 500
3000 K STREET NW
WASHINGTON DC 20007

COPY MAILED

SEP 15 2008

In re Application of	:	
TANEJA, Dinesh N. et al.	:	
Application No. 11/797,451	:	DECISION ON PETITION
Filed: May 03, 2007	:	TO WITHDRAW
Attorney Docket No. **028338-0226**	:	FROM RECORD
	:	

This is a decision on the Request to Withdraw as attorney or agent of record under 37 C.F.R. § 1.36(b), filed December 06, 2007.

The request is **APPROVED**.

A grantable request to withdraw as attorney/agent of record must be signed by every attorney/agent seeking to withdraw or contain a clear indication that one attorney is signing on behalf of another/others. A request to withdraw will not be approved unless at least 30 (thirty) days would remain between the date of approval and the later of the expiration date of a time to file a response or the expiration date of the maximum time period which can be extended under 37 C.F.R. § 1.136(a).

The request was signed by Michael D. Kaminski on behalf of all attorneys of record who are associated with customer No. 22428. All attorneys/agents associated have been withdrawn. Applicant is reminded that there is no attorney of record at this time.

The request to change the correspondence of record is not acceptable as the requested correspondence address is not that of: (1) the first named signing inventor; or (2) an intervening assignee of the entire interest under 37 C.F.R 3.71. All future communications from the Office will be directed to the first named signing inventor.

There are no outstanding Office actions at this time.

Telephone inquiries concerning this decision should be directed to Michelle R. Eason at 571-272-4231.

Michelle R. Eason
Paralegal Specialist
Office of Petitions

cc: **DINESH N. TANEJA**
230 TIMBERWIND LANE
VANDALIA, OHIO 45377

cc: **MR. WILLIAM SCOTT ANDES**
GE AVIATION
1 NEUMANN WAY, MD-H17
CINCINNATI, OHIO 45215-6301

UNITED STATES PATENT AND TRADEMARK OFFICE

Commissioner for Patents
United States Patent and Trademark Office
P.O. Box 1450
Alexandria, VA 22313-1450
www.uspto.gov

STAAS & HALSEY LLP
SUITE 700
1201 NEW YORK AVENUE, N.W.
WASHINGTON DC 20005

COPY MAILED
JUL 30 2007
OFFICE OF PETITIONS

In re Application of	:	
An et al.	:	
Application No. 11/797490	:	
Filing or 371(c) Date: 05/03/2007	:	
Attorney Docket Number:	:	DECISION
1594.1650	:	ON PETITION

This is a decision on the "Petition for Date of Deposit," filed June 7, 2007, requesting the above-identified application be accorded a filing date of May 3, 2007, including Figure 1. The petition is properly treated under 37 CFR 1.182.

The petition is granted.

The application was filed on May 3, 2007. On May 30, 2007, the Office of Initial Patent Examination (OIPE) mailed a Notice of Omitted Item(s) in a Nonprovisional Application (hereinafter "Notice") stating that the application had been accorded a filing date; however, Figure 1 described in the specification appeared to have been omitted from the application.

The instant petition

Applicant files the instant petition and avers that Figure 1 described in the specification was included with the application on May 3, 2007. In support of this assertion, Applicant provides a copy of a return receipt postcard acknowledging receipt of, *inter alia,* six (6) pages of drawings (Figs. 1-6) by this Office on May 3, 2007.

Applicable Law, Rules and MPEP

"A postcard receipt which itemizes and properly identifies the papers which are being filed serves as *prima facie* evidence of receipt in the PTO of all items listed thereon by the PTO." MPEP § 503.

Accordingly, the petition is granted.

The copy of Figure 1, filed with the instant petition, will be used for examination purposes.

A refund of the petition fee has been credited to Applicant's deposit account as authorized in the "New Application Fee Transmittal" filed with the application on May 3, 2007.

The application will be returned to the Office of Initial Patent Examination for further processing with a filing date of May 3, 2007, and an indication that Figure 1 described in the specification was included with the application papers filed on May 3, 2007, using the copy of Figure 1 filed with the present petition.

Telephone inquiries concerning this decision should be directed to the undersigned at (571) 272-3232.

Derek L. Woods
Attorney
Office of Petitions

UNITED STATES PATENT AND TRADEMARK OFFICE

Commissioner for Patents
United States Patent and Trademark Office
P.O. Box 1450
Alexandria, VA 22313-1450
www.uspto.gov

JAMES W. PRAVEL
PRAVEL INTELLECTUAL PROPERTY LAW, PC
1800 DIAGONAL ROAD
SUITE 600
ALEXANDRIA VA 22314

COPY MAILED
MAR 01 2010

In re Application of	:	
SUTCLIFFE, Scott A.	:	
Application No. 11/797,496	:	DECISION ON PETITION
Filed: May 03, 2007	:	TO WITHDRAW
Attorney Docket No. **2280.8**	:	FROM RECORD
	:	

This is a decision on the Request to Withdraw as attorney or agent of record under 37 C.F.R. § 1.36(b), filed January 22, 2008.

The request is **APPROVED**.

A grantable request to withdraw as attorney/agent of record must be signed by every attorney/agent seeking to withdraw or contain a clear indication that one attorney is signing on behalf of another/others. A request to withdraw will not be approved unless at least 30 (thirty) days would remain between the date of approval and the later of the expiration date of a time to file a response or the expiration date of the maximum time period which can be extended under 37 C.F.R. § 1.136(a).

The request was signed by James W. Pravel on behalf of all attorneys of record who are associated with customer No. 25248. All attorneys/agents associated have been withdrawn. Applicant is reminded that there is no attorney of record at this time.

The request to change the correspondence address of record is not acceptable as the requested correspondence address is not that of: (1) the first named signing inventor; or (2) an intervening assignee of the entire interest under 37 C.F.R 3.71. All future communications from the Office will be directed to the first named signing inventor.

The application became abandoned for failure to timely pay the issue fee and publication fee indicated in the Notice of Allowance and Fee(s) Due mailed October 07, 2009.

Telephone inquiries concerning this decision should be directed to the undersigned at 571-272-423.

Michelle R. Eason
Paralegal Specialist
Office of Petitions

cc: **SCOTT A. SUTCLIFFE**
5202 AVENUE H
AUSTIN, TEXAS 78751

cc: **ENGEL BALLISTIC RESEARCH, INC.**
JOHN WHITWORTH ENGEL
544A ALUM CREEK ROAD
SMITHVILLE, TEXAS 78957-5076

UNITED STATES PATENT AND TRADEMARK OFFICE

Commissioner for Patents
United States Patent and Trademark Office
P.O. Box 1450
Alexandria, VA 22313-1450
www.uspto.gov

DAVID ODELL SIMMONS
7637 PARKVIEW CIRCLE
AUSTIN TX 78731

MAILED

MAY 04 2010

OFFICE OF PETITIONS

In re Application of	:	
Scott A. Sutcliffe	:	
Application No. 11/797,496	:	ON PETITION
Filed: May 3, 2007	:	
Attorney Docket No.	:	

This is a decision on the petition under 37 CFR 1.137(b), filed February 19, 2010 to revive the above-identified application.

The petition is **GRANTED.**

The above-identified application became abandoned for failure to submit the issue fee in a timely manner in reply to the Notice of Allowance mailed October 7, 2009, which set a statutory period for reply of three (3) months. Accordingly, by operation of law, the above-identified application became abandoned on January 8, 2010.

The petition satisfies the conditions for revival pursuant to the provisions of 37 CFR 1.137(b) in that (1) the reply in the form of payment of the Issue Fee; (2) the petition fee of $810.00; and (3) the required statement of unintentional delay have been received. Accordingly, the Issue Fee payment is accepted as having been unintentionally delayed.

Since the above-identified application is not a utility or plant application filed before June 8, 1995, a terminal disclaimer under 37 CFR 1.137(d) is not required. The petitioner may request a refund of this fee by writing to the following address: Mail Stop 16, Commissioner for Patents, P. O. Box 1450, Alexandria, VA 22313-1450. A copy of this decision should accompany petitioner's request.

The Power of Attorney filed February 19, 2010 has been accepted.

It is not apparent whether the person signing the statement of unintentional delay was in a position to have firsthand or direct knowledge of the facts and circumstances of the delay at issue. Nevertheless, such statement is being treated as having been made as the result of a reasonable inquiry into the facts and circumstances of such delay. See 37 CFR 10.18(b) and Changes to Patent Practice and Procedure; Final Rule Notice, 62 Fed. Reg. 53131, 53178 (October 10, 1997), 1203 Off. Gaz. Pat. Office 63, 103 (October 21, 1997). In the event that such an inquiry has not been made, petitioner must make such an inquiry. If such inquiry results in the discovery that it is not correct that the entire delay in filing the required reply from the due date for the reply until the filing of a grantable petition pursuant to 37 CFR 1.137(b) was unintentional, petitioner must notify the Office.

Telephone inquiries concerning this decision should be directed to Shahid Alam at (571) 272-6052 or in his absence, the undersigned at (571) 272-7099.

The application file is being referred to the Office of Data Management.

David A. Bucci
Petitions Examiner
Office of Petitions

UNITED STATES PATENT AND TRADEMARK OFFICE

COMMISSIONER FOR PATENTS
UNITED STATES PATENT AND TRADEMARK OFFICE
P.O. BOX 1450
ALEXANDRIA, VA 22313-1450
www.uspto.gov

JACOBSON HOLMAN PLLC
400 SEVENTH STREET N.W.
SUITE 600
WASHINGTON DC 20004

MAILED

MAY 15 2009

OFFICE OF PETITIONS

Applicant: Bieschke et al.
Appl. No.: 11/797,508
Filing Date: May 3, 2007
Title: QUANTITATIVE ANALYSIS AND TYPING OF SUBCELLULAR PARTICLES
Attorney Docket: P67758US1
Pub. No.: US 2008/0070233 A1
Pub. Date: March 20, 2008

This is a decision on the request for a corrected patent application publication under 37 CFR 1.221(b), received on May 15, 2008, for the above-identified application.

The request is DISMISSED.

Applicant requests that the application be republished because the inventors' names appear with certain spelling errors and the residence is mispelled.

37 CFR 1.221 (b) is applicable "only when the Office makes a material mistake which is apparent from Office records.... Any request for a corrected publication or revised patent application publication other than provided as provided in paragraph (a) of this section must be filed within two months from the date of the patent application publication. This period is not extendable." A material mistake must affect the public's ability to appreciate the technical disclosure of the patent application publication, to determine the scope of the patent application publication, or to determine the scope of the provisional rights that an applicant may seek to enforce upon issuance of a patent. [1]

The error in the name and residence on the front page of the publication may be Office errors, but they are not material Office errors under 37 CFR 1.221. The typographical errors in the inventor's name and residence do not affect the understanding of the application. The mistakes do not affect the public's ability to appreciate the technical disclosure of the patent application publication, or determine the scope of the patent application publication or determine the scope of the provisional rights that an applicant may seek to enforce upon issuance of a patent.

[1] Changes to Implement Eighteen-Month Publication of Patent Applications, 65 FR 57023, 57038 (Sept. 20, 2000), 1239, Off. Gaz. Pat. Office Notices 63, 75 (Oct. 10, 2000) (final rule).

On June 4, 2007 and December 17, 200, Filing Receipts were mailed by the Office, which listed the inventor's name as "Armin Goese" and the residence as "Goettlngen". To avoid this type of problem in the future, applicant's representative should make request a corrected filing receipt prior export of the application to the publisher which is approximately 10 weeks before the projected publication date, which is listed on the Filing Receipt and/or prior to publication of the application. The request for a Corrected Filing Receipt was not received in sufficient time for the publication.

The applicant is advised that a "request for republication of an application previously published" may be filed under 37 CFR 1.221(a). Such a request for republication "must include a copy of the application compliance with the Office's electronic filing system requirements and be accompanied by the publication fee set forth in § 1.18(d) and the processing fee set forth in § 1.17(i)." If the request for republication does not comply with the electronic filing system requirements, the republication will not take place and the publication fee set forth in § 1.18(d) will be refunded. The processing fee will be retained.

A guide for filing a request for a Pre-Grant Publication, such as a request for republication, may be found on the link below:

http://www.uspto.gov/ebc/portal/tutorials.htm

Any request for republication under 37 CFR 1.221(a), must be submitted via the EFS system, as a "Pre-Grant Publication" and questions or request for reconsideration of the decision, should be addressed as follows:

By mail to: Mail Stop PGPUB
Commissioner for Patents
P.O. Box 1450
Alexandria, Va. 22313-1450

Inquiries relating to this matter may be directed to Michael Cygan at (571) 272-7700, or to the undersigned at (571) 272-7709.

Mark Polutta
Senior Legal Advisor
Office of Patent Legal Administration
Office of the Deputy Commissioner
for Patent Examination Policy

UNITED STATES PATENT AND TRADEMARK OFFICE

Commissioner for Patents
United States Patent and Trademark Office
P.O. Box 1450
Alexandria, VA 22313-1450
www.uspto.gov

MAILED

APR 12 2010

OFFICE OF PETITIONS

HARNESS, DICKEY & PIERCE, P.L.C.
P.O. BOX 8910
RESTON VA 20195

In re Application of :
Bourim, Lee, and Cho :
Application No.: 11/797,519 : ON PETITION
Filing Date: May 4, 2007 :
Attorney Docket No. 2557SI-000557/US :

This is a decision on the "Petition under 37 CFR 1.42- 1.47 for Acceptance of a Declaration under 37 CFR 1.131 missing a co-Inventor", filed February 12, 2010, which will be treated as a petition under 37 CFR 1.183 to waive the requirements of 37 CFR 1.131.

The petition is **dismissed**.

The record reflects that the joint inventors named in subject application executed the declaration required by 37 CFR 1.63, and that the executed declaration was filed on August 24, 2007. Petitioner now files the instant petition under because inventor El Mostafa Bourim cannot be located sign the declaration under 37 CFR 1.131. Petitioner requests that the declaration under 37 CFR 1.131 be accepted without the signature of Mr. Bourim.

It is noted that the provisions of 37 CFR 1.47 only apply to the execution of the original oath or declaration under 37 CFR 1.63. A petition under 37 CFR 1.47 is not appropriate in this case because the joint inventors executed the original declaration. Where, as in this instance, petitioner is not able to obtain the signature of one, or all of the joint inventors, after the execution of the declaration under 37 CFR 1.63, relief can be granted, pursuant to 37 CFR 1.183, by the waiver or suspension of the requirements of 37 CFR 1.131 as to the signature requirements for the joint inventors.

Accordingly, the instant petition will be treated as petition under 37 CFR 1.183 to waive the requirement of 37 CFR 1.131 so as to accept the declaration of prior invention, without the signature of Mr. Bourim The requirements for a successful petition under 37 CFR 1.183 to waive the requirements of 37 CFR 1.131 as to the signature requirements as to the joint inventors are similar to that of a petition under 37 CFR 1.47. Relative to the circumstances presented by the instant petition, petitioner must establish by statements from persons having first-hand knowledge and documentary evidence, that Mr. Bourim could not be reached after a diligent effort. Section 409.03(d) of the *Manual of Patent Examining Procedure* provides guidance as to what will suffice as sufficient proof that the non-signing inventor cannot be reached as is alleged in the instant petition. This section states, in pertinent part, as follows:

> [w]here inability to find or reach a nonsigning inventor "after diligent effort" is the reason for filing under 37 CFR 1.47, a statement of facts should be submitted that fully describes the exact facts which are relied on to establish that a diligent effort was made.

> The statement of facts must be signed, where at all possible, by a person having firsthand knowledge of the facts recited therein. Statements based on hearsay will not normally be accepted. Copies of documentary evidence such as Internet searches, certified mail, return receipts, cover letters of instructions, telegrams, that support a finding that the nonsigning inventor could not be found or reached should be made part of the statement. The steps taken to locate the whereabouts of the nonsigning inventor should be included statement of facts.

Accordingly, the renewed petition must be accompanied by evidence that a diligent effort was made to locate inventor Bourim. Petitioner may consult Section 409.03 of the Manual of Patent Examining Procedure for guidance on what kind of statements and evidence should accompany the renewed petition

Further, it is noted that the declaration under 37 CFR 1.131 filed February 12, 2010, only contains signature blocks for inventors Lee and Cho. In order for inventors Lee and Cho to be deemed to have filed the declaration under 37 CFR 1.131 on their behalves and on behalf of inventor Bourim, it is requested that petitioner add a blank signature block for inventor Bourim to the declaration under 37 CFR 1.131.

The fee for the instant petition is $400.00. Deposit account 08-0750 will be charged an additional $200.00, accordingly.

Further correspondence with respect to this matter should be addressed as follows:

By mail: Mail Stop Petitions
Commissioner for Patents
P.O. Box 1450
Alexandria, VA 22313-1450

By FAX: (571) 273-8300
Attn: Office of Petitions

Telephone inquiries regarding this matter should be directed to the undersigned at (571) 272-3222.

Kenya A. McLaughlin
Petitions Attorney
Office of Petitions

UNITED STATES PATENT AND TRADEMARK OFFICE

UNITED STATES DEPARTMENT OF COMMERCE
United States Patent and Trademark Office
Address: COMMISSIONER FOR PATENTS
P.O. Box 1450
Alexandria, Virginia 22313-1450
www.uspto.gov

APPLICATION NO.	FILING DATE	FIRST NAMED INVENTOR	ATTORNEY DOCKET NO.	CONFIRMATION NO.
11/797,520	05/03/2007	Mark Brister	DEXCOM.051C4	8963

7590 11/01/2007
KNOBBE MARTENS OLSON & BEAR LLP
2040 MAIN STREET
FOURTEENTH FLOOR
IRVINE, CA 92614

EXAMINER
MALLARI, PATRICIA C

ART UNIT	PAPER NUMBER
3735	

NOTIFICATION DATE	DELIVERY MODE
11/01/2007	ELECTRONIC

DECISION GRANTING PETITION UNDER 37 CFR 1.138(d)

The declaration of express abandonment is recognized

This is in response to the petition under 37 CFR 1.138(d), requesting for a refund of any previously paid search fee and excess claims fee in the above-identified application.

The petition is granted.

The express abandonment is recognized. Any previously paid search fee and excess claims fee are hereby refunded.

Telephone inquiries should be directed to the Office of Data Management at (571) 272-4200.

Kalethia King
Patent Publication Branch
Office of Data Management

FORM PET651G (Rev. 08/07)

UNITED STATES PATENT AND TRADEMARK OFFICE

UNITED STATES DEPARTMENT OF COMMERCE
United States Patent and Trademark Office
Address: COMMISSIONER FOR PATENTS
P.O. Box 1450
Alexandria, Virginia 22313-1450
www.uspto.gov

APPLICATION NO.	FILING DATE	FIRST NAMED INVENTOR	ATTORNEY DOCKET NO.	CONFIRMATION NO.
11/797,521	05/03/2007	Mark Brister	DEXCOM.051C5	9012

7590 11/01/2007
KNOBBE MARTENS OLSON & BEAR LLP
2040 MAIN STREET
FOURTEENTH FLOOR
IRVINE, CA 92614

EXAMINER
NATNITHITHADHA, NAVIN

ART UNIT	PAPER NUMBER
3735	

NOTIFICATION DATE	DELIVERY MODE
11/01/2007	ELECTRONIC

DECISION GRANTING PETITION UNDER 37 CFR 1.138(d)

The declaration of express abandonment is recognized

This is in response to the petition under 37 CFR 1.138(d), requesting for a refund of any previously paid search fee and excess claims fee in the above-identified application.

The petition is granted.

The express abandonment is recognized. Any previously paid search fee and excess claims fee are hereby refunded.

Telephone inquiries should be directed to the Office of Data Management at (571) 272-4200.

Kalitus King
Patent Publication Branch
Office of Data Management

FORM PET651G (Rev. 08/07)

UNITED STATES PATENT AND TRADEMARK OFFICE

Commissioner for Patents
United States Patent and Trademark Office
P.O. Box 1450
Alexandria, VA 22313-1450
www.uspto.gov

ERIC ROBINSON
PMB 955
21010 SOUTHBANK ST.
POTOMAC FALLS VA 20165

COPY MAILED
OCT 06 2008
OFFICE OF PETITIONS

In re Application of
Yamazaki et al.
Application No. 11/797,535
Filed: 05/04/2007
Attorney Docket No. 0756-8010

DECISION ON PETITION

This is a decision on the petition under 37 CFR 1.181 (no fee), filed September 15, 2008, requesting withdrawal of the holding of abandonment in the above-identified application.

The petition is **GRANTED**.

This application was held abandoned for failure to reply to the nonfinal Office action mailed January 10, 2008, which set a three (3) month shortened statutory period for reply. In the absence of a timely filed reply, the application became abandoned on April 11, 2008. On September 11, 2008, the Office mailed a Notice of Abandonment.

Petitioner asserts that the nonfinal Office action dated mailed January 10, 2008, was not received.

A review of the written record indicates no irregularity in the mailing of the Office action and in the absence of any irregularity, there is a strong presumption that the Office action was properly mailed to the practitioner at the address of record. This presumption may be overcome by a showing that the Office action was not in fact received.

As stated in Section 711.03(c)(I)(A) of the Manual for Patent Examining Procedure:

> In Delgar v. Schulyer, 172 USPQ 513 (D.D.C. 1971), the court decided that the Office should mail a new Notice of Allowance in view of the evidence presented in support of the contention that the applicant's representative did not receive the original Notice of Allowance. Under the reasoning of Delgar, an allegation that an Office action was never received may be considered in a petition to withdraw the holding of

abandonment. If adequately supported, the Office may grant the petition to withdraw the holding of abandonment and remail the Office action. That is, the reasoning of Delgar is applicable regardless of whether an application is held abandoned for failure to timely pay the issue fee (35 U.S.C. 151) or for failure to prosecute (35 U.S.C. 133).

To minimize costs and burdens to practitioners and the Office, the Office has modified the showing required to establish nonreceipt of an Office action. The showing required to establish nonreceipt of an Office communication must include a statement from the practitioner describing the system used for recording an Office action received at the correspondence address of record with the USPTO. The statement should establish that the docketing system is sufficiently reliable. It is expected that the record would include, but not be limited to, the application number, attorney docket number, the mail date of the Office action and the due date for the response.

Practitioner must state that the Office action was not received at the correspondence address of record, and that a search of the practitioner's record(s), including any file jacket or the equivalent, and the application contents, indicates that the Office action was not received. A copy of the record(s) used by the practitioner where the non-received Office action would have been entered had it been received is required.

A copy of the practitioner's record(s) required to show non-receipt of the Office action should include the master docket for the firm. That is, if a three month period for reply was set in the nonreceived Office action, a copy of the master docket report showing all replies docketed for a date three months from the mail date of the nonreceived Office action must be submitted as documentary proof of nonreceipt of the Office action. If no such master docket exists, the practitioner should so state and provide other evidence such as, but not limited to, the following: the application file jacket; incoming mail log; calendar; reminder system; or the individual docket record for the application in question.

The showing outlined above may not be sufficient if there are circumstances that point to a conclusion that the Office action may have been lost after receipt rather than a conclusion that the Office action was lost in the mail (e.g., if the practitioner has a history of not receiving Office actions).

After reviewing the documents submitted on petition, the Office concludes that the showing of record is sufficient to warrant withdrawal of the holding of abandonment. The practitioner submitted a copy of the master docket records for the firm where the nonfinal Office action would have been entered had it been received and docketed. The practitioner attested to the fact that a search of the records indicated that the nonfinal Office action was not received at the correspondence address of record. Lastly, petitioner provided the Declaration of Penny L. Lurie,

the Docketing Manager, in support of the assertion of non-receipt. Accordingly, petitioner presented the required showing under 37 CFR 1.181.

The petition under 37 CFR 1.181 is **GRANTED**. The holding of abandonment is hereby withdrawn. As no petition fee is required, the Office will refund the $130.00 submitted with the petition.

Technology Center Art Unit 2871 has been advised of this decision. The matter is being referred to the Technology Center's technical support staff for re-mailing of the nonfinal Office action. The three (3) month shortened statutory period for responding to the nonfinal Office action will be set to run from the re-mailing date of the Office action.

Telephone inquiries related to this decision may be directed to the undersigned at (571) 272-3211.

Christina T. Donnell

Christina Tartera Donnell
Senior Petitions Attorney
Office of Petitions

UNITED STATES PATENT AND TRADEMARK OFFICE

Commissioner for Patents
United States Patent and Trademark Office
P.O. Box 1450
Alexandria, VA 22313-1450
www.uspto.gov

HARNESS, DICKEY & PIERCE, P.L.C.
P.O. BOX 8910
RESTON VA 20195

COPY MAILED

JAN 0 5 2009

OFFICE OF PETITIONS

In re Application of
INGANAS, Olle et al.
Application No. 11/797,564
Filed: May 04, 2007
Attorney Docket No. **10400-000315/US/CPB**

DECISION ON PETITION
TO WITHDRAW
FROM RECORD

This is a decision on the Request to Withdraw as attorney or agent of record under 37 C.F.R. § 1.36(b), filed December 09, 2008.

The request is **APPROVED**.

A grantable request to withdraw as attorney/agent of record must be signed by every attorney/agent seeking to withdraw or contain a clear indication that one attorney is signing on behalf of another/others. The Office requires the practitioner(s) requesting withdrawal to certify that he, she, or they have: (1) given reasonable notice to the client, prior to the expiration of the response period, that the practitioner(s) intends to withdraw from employment; (2) delivered to the client or a duly authorized representative of the client all papers and property (including funds) to which the client is entitled; and (3) notified the client of any responses that may be due and the time frame within which the client must respond, pursuant 37 CFR 10.40(c).

The request was signed by Donald Daley on behalf of all attorneys of record who are associated with customer No. 30593. All attorneys/agents associated with the Customer Number 30593 have been withdrawn. Applicant is reminded that there is no attorney of record at this time.

The request to change the correspondence address of record is not acceptable as the requested correspondence address is not that of: (1) the first named signing inventor; or (2) an intervening assignee of the entire interest under 37 C.F.R 3.71. All future communications from the Office will be directed to the first named signing inventor at the first copied address below until otherwise properly notified by the applicant.

Telephone inquiries concerning this decision should be directed to Tredelle Jackson at 571-272-2783.

Tredelle D. Jackson
Paralegal Specialist
Office of Petitions

cc: **OLLE INGANAS**
WERNERSGATAN 13
582 46 LINKOPING, SWEDEN

cc: **MR. MELVIN A. ROBINSON**
SCHIF HARDIN LLP
6600 SEARS TOWER, 233 SOURTH WACKER DRIVE
CHICAGO IL 60606-6473

UNITED STATES PATENT AND TRADEMARK OFFICE

COMMISSIONER FOR PATENTS
UNITED STATES PATENT AND TRADEMARK OFFICE
P.O. BOX 1450
ALEXANDRIA, VA 22313-1450
WWW.USPTO.GOV

Paper No.

SUGHRUE-265550
2100 PENNSYLVANIA AVE. NW
WASHINGTON DC 20037-3213

MAILED

FEB 27 2009

OFFICE OF PETITIONS

In re Application of	:	
Ryuichi Shiohara	:	
Application No. 11/797,570	:	DECISION ON PETITION
Filed: May 4, 2007	:	PURSUANT TO
Attorney Docket No.: Q101421	:	37 C.F.R. § 1.181(A)
Title: IMAGE INPUT UNIT AND	:	
IMAGE INPUT METHOD	:	

This is a decision on the petition pursuant to 37 C.F.R. § 1.181(a), filed on January 23, 2009, requesting that the holding of abandonment in the above-identified application be withdrawn.

This petition pursuant to 37 C.F.R. § 1.181(a) is **GRANTED**.

BACKGROUND

The above-identified application became abandoned for failure to reply in a timely manner to the non-final Office action, mailed May 29, 2008, which set a shortened statutory period for reply of three months. No response was received, and no extensions of time under the provisions of 37 C.F.R. § 1.136(a) were requested. Accordingly, the above-identified application became abandoned on August 30, 2008. A notice of abandonment was mailed on January 7, 2009.

ANALYSIS

Petitioner has alleged that the mailing was not received. The electronic file has been reviewed, and it is clear that the

Office communication was returned to the Office by the United States Postal Service on May 30, 2008.[1]

Considering the facts and circumstances of the delay at issue, as set forth on petition, it is concluded that Petitioner has met his burden of establishing that the non-final Office action of May 29, 2008 was not received.

Accordingly, the petition pursuant to 37 C.F.R. § 1.181(a) is **GRANTED**. The holding of abandonment is **WITHDRAWN**.

CONCLUSION

The Technology Center will be notified of this decision. The Technology Center's support staff will re-mail the non-final Office action of May 29, 2008, and will set a new period for response.

Petitioner may find it beneficial to view Private PAIR within a fortnight of the present decision to ensure that the withdrawal of the holding of abandonment has been acknowledged by the Technology Center in response to this decision. It is noted that all inquiries with regard to any failure of that change in status should be directed to the Technology Center where that change of status must be effected - **the Office of Petitions cannot effectuate a change of status.**

Telephone inquiries regarding this decision should be directed to the undersigned at (571) 272-3225.[2] All other inquiries concerning examination procedures or status of the application should be directed to the Technology Center.

/Paul Shanoski/
Paul Shanoski
Senior Attorney
Office of Petitions

---

1 The returned mailing does not contain an indication from the USPS as to why delivery was not successfully completed.
2 Petitioner will note that all practice before the Office should be in writing, and the action of the Office will be based exclusively on the written record in the Office. See 37 C.F.R. § 1.2. As such, Petitioner is reminded that no telephone discussion may be controlling or considered authority for any of Petitioner's further action(s).

UNITED STATES PATENT AND TRADEMARK OFFICE

UNITED STATES DEPARTMENT OF COMMERCE
United States Patent and Trademark Office
Address: COMMISSIONER FOR PATENTS
P.O. Box 1450
Alexandria, Virginia 22313-1450
www.uspto.gov

APPLICATION NO.	FILING DATE	FIRST NAMED INVENTOR	ATTORNEY DOCKET NO.	CONFIRMATION NO.
11/797,606	05/04/2007	Fritz Zwahlen	127357	8929

7590 02/11/2008
OLIFF & BERRIDGE, PLC
P.O. BOX 320850
ALEXANDRIA, VA 22320-4850

EXAMINER

ART UNIT	PAPER NUMBER
3722	

MAIL DATE	DELIVERY MODE
02/11/2008	PAPER

DECISION GRANTING PETITION UNDER 37 CFR 1.138(d)

The declaration of express abandonment is recognized

This is in response to the petition under 37 CFR 1.138(d), requesting for a refund of any previously paid search fee and excess claims fee in the above-identified application.

The petition is granted.

The express abandonment is recognized. Any previously paid search fee and excess claims fee are hereby refunded.

Telephone inquiries should be directed to the Office of Data Management at (571) 272-4200.

Patent Publication Branch
Office of Data Management

Adjustment date: 02/11/2008 KKING1
05/07/2007 YPOLITE1 00000050 11797606
02 FC:1111 -500.00 OP

Repln. Ref: 02/11/2008 KKING1 0013393200
DA#:150461 Name/Number:11797606
FC: 9204 $500.00 CR

FORM PET651G (Rev. 08/07)

UNITED STATES PATENT AND TRADEMARK OFFICE

Commissioner for Patents
United States Patent and Trademark Office
P.O. Box 1450
Alexandria, VA 22313-1450
www.uspto.gov

LITMAN LAW OFFICES, LTD.
POST OFFICE BOX 15035
CRYSTAL CITY STATION
ARLINGTON, VA 22215-0035

RECEIVED
DEC 22 2008
OFFICE OF PETITIONS

In re Application of	:	
John Roberts	:	DECISION ON PETITION
Application No. 11/797,617	:	TO MAKE SPECIAL UNDER
Filed: May 04, 2007	:	37 CFR 1.102(c)(1)

This is a decision on the petition under 37 CFR 1.102(c)(1), filed May 04, 2007, to make the above-identified application special based on applicant's age as set forth in M.P.E.P. § 708.02, Section IV.

The petition is **GRANTED**.

A grantable petition to make an application special under 37 CFR 1.102(c)(1) and MPEP § 708.02, Section IV: Applicant's Age must be accompanied by evidence showing that at least one of the applicants is 65 years of age, or more, such as a birth certificate or a statement by applicant. No fee is required

The instant petition includes a statement by the applicant. Accordingly, the above-identified application has been accorded "special" status.

The file does not indicate a change of address has been submitted, although the address given on the petition differs from the address of record. If appropriate, a change of address should be filed in accordance with MPEP 601.03. A courtesy copy of this decision is being mailed to the address given on the petition; however, the Office will mail all future correspondence solely to the address of record.

Telephone inquiries concerning this decision should be directed to Shelley Clement at (571)272-6052 or in her absence to the undersigned at (571)272-7099.

All other inquiries concerning either the examination or status of the application should be directed to the Technology Center.

The application is being forwarded to the Technology Center Art Unit 3651 for action on the merits commensurate with this decision.

for David Bucci
Petitions Examiner
Office of Petitions

cc: John G. Roberts
140 Uwapo Road
Kihea, HI 96753

UNITED STATES PATENT AND TRADEMARK OFFICE

Commissioner for Patents
United States Patent and Trademark Office
P.O. Box 1450
Alexandria, VA 22313-1450
www.uspto.gov

HUNTON & WILLIAMS LLP
INTELLECTUAL PROPERTY DEPARTMENT
1900 K STREET, N.W.
SUITE 1200
WASHINGTON, DC 20006-1109

COPY MAILED

OCT 0 8 2008

OFFICE OF PETITIONS

In re Application of :
David H. Stockham :
Application No. 11/797,623 :
Filed: May 4, 2007 :
Attorney Docket No. 66672.000004 :

DECISION GRANTING PETITION
UNDER 37 CFR 1.137(b)

This is a decision in response to the petition, filed June 24, 2008, under 37 CFR 1.137(b) to revive the instant nonprovisional application for failure to timely notify the U.S. Patent and Trademark (USPTO) of the filing of an application in a foreign country, or under a multinational treaty that requires publication of applications eighteen months after filing. *See* 37 CFR 1.137(f).

The petition is **GRANTED**.

Petitioner states that the instant nonprovisional application is the subject of an application filed in an eighteen month publication country on May 5, 2007. However, the USPTO was unintentionally not notified of this filing within 45 days subsequent to the filing of the subject application in an eighteen month publication country.

In view of the above, this application became abandoned pursuant to 35 U.S.C. §122(b)(2)(B)(iii) and 37 CFR 1.213(c) for failure to timely notify the Office of the filing of an application in a foreign country or under a multilateral international agreement that requires publication of applications 18 months after filing.

A petition to revive an application abandoned pursuant to 35 U.S.C. § 122(b)(2)(B)(iii) for failure to notify the USPTO of a foreign filing must be accompanied by:

(1) the required reply which is met by the notification of such filing in a foreign country or under a multinational treaty;
(2) the petition fee as set forth in 37 CFR 1.17(m); and
(3) a statement that the entire delay in filing the required reply from the due date of the reply until the filing of a grantable petition was unintentional.

The petition is found to be in compliance with 37 CFR 1.137(b). Accordingly, the failure to timely notify the USPTO of a foreign or international filing within 45 days after the date of filing of such foreign or international application as provided by 35 U.S.C. § 122(b)(2)(B)(iii) and 37 CFR 1.213(c) is accepted as having been unintentionally delayed.

The previous Request and Certification under 35 U.S.C. § 122(b)(2)(B)(i) has been rescinded. A Notice Regarding Rescission of Nonpublication Request which sets forth the projected publication date of January 15, 2009 accompanies this decision on petition.

Any inquiries concerning this decision may be directed to the undersigned at (571) 272-3204.

This application is being referred to the Technology Center 2871 for examination in due course.

Sherry D. Brinkley
Petitions Examiner
Office of Petitions

ATTACHMENT: Notice Regarding Rescission of Nonpublication Request

UNITED STATES PATENT AND TRADEMARK OFFICE

UNITED STATES DEPARTMENT OF COMMERCE
United States Patent and Trademark Office
Address: COMMISSIONER FOR PATENTS
P.O. Box 1450
Alexandria, Virginia 22313-1450
www.uspto.gov

APPLICATION NUMBER	FILING OR 371(C) DATE	FIRST NAMED APPLICANT	ATTY. DOCKET NO./TITLE
11/797,623	05/04/2007	David H. Stockham	66672.000004

CONFIRMATION NO. 8316

21967
HUNTON & WILLIAMS LLP
INTELLECTUAL PROPERTY DEPARTMENT
1900 K STREET, N.W.
SUITE 1200
WASHINGTON, DC 20006-1109

NONPUBLICATION RESCISSION LETTER

OC000000032440930

Date Mailed: 10/06/2008

Communication Regarding Rescission Of Nonpublication Request and/or Notice of Foreign Filing

Applicant's rescission of the previously-filed nonpublication request and/or notice of foreign filing is acknowledged. The paper has been reflected in the Patent and Trademark Office's (USPTO's) computer records so that the earliest possible projected publication date can be assigned.

The projected publication date is 01/15/2009.

If applicant rescinded the nonpublication request before or on the date of "foreign filing,"[1] then no notice of foreign filing is required.

If applicant foreign filed the application after filing the above application and before filing the rescission, and the rescission did not also include a notice of foreign filing, then a notice of foreign filing (not merely a rescission) is required to be filed within 45 days of the date of foreign filing. See 35 U.S.C. § 122(b)(2)(B)(iii), and Clarification of the United States Patent and Trademark Office's Interpretation of the Provisions of 35 U.S.C. § 122(b)(2)(B)(ii)-(iv), 1272 Off. Gaz. Pat. Office 22 (July 1, 2003).

If a notice of foreign filing is required and is not filed within 45 days of the date of foreign filing, then the application becomes abandoned pursuant to 35 U.S.C. § 122(b)(2)(B)(iii). In this situation, applicant should either file a petition to revive or notify the Office that the application is abandoned. See 37 CFR 1.137(f). Any such petition to revive will be forwarded to the Office of Petitions for a decision. Note that the filing of the petition will not operate to stay any period of reply that may be running against the application.

Questions regarding petitions to revive should be directed to the Office of Petitions at (571) 272-3282.

[1] Note, for purpose of this notice, that "foreign filing" means "filing an application directed to the same invention in another country, or under a multilateral international agreement, that requires publication of applications 18 months after filing".

/sdbrinkley/

Office of Data Management, Application Assistance Unit (571) 272-4000, or (571) 272-4200, or 1-888-786-0101

UNITED STATES PATENT AND TRADEMARK OFFICE

Commissioner for Patents
United States Patent and Trademark Office
P.O. Box 1450
Alexandria, VA 22313-1450
www.uspto.gov

TROXELL LAW OFFICE PLLC
5205 LEESBURG PIKE, SUITE 1404
FALLS CHURCH VA 22041

MAILED

JUL 20 2009

OFFICE OF PETITIONS

In re Application of :
Chen, et al. :
Application No. 11/797,642 :
Filed: May 4, 2007 :
Attorney Docket No. BHT/3214-245 :
For: POSTERIOR-FORM ENHANCEMENT DEVICE

ON PETITION

This is a decision on the petition under 37 CFR 1.137(b), filed June 4, 2009, to revive the above-identified application.

This application became abandoned for failure to timely respond to the final Office action, mailed April 25, 2008, which set an extendable three month period for reply. Accordingly, this application became abandoned on July 26, 2008. A Notice of Abandonment was mailed on October 30, 2008.

Applicants have submitted a RCE and required $405.00 fee, a double patenting terminal disclaimer and required $70.00 fee, and an amendment in reply to the April 25, 2008 final Office action, an acceptable statement of the unintentional nature of the delay in responding to the April 25, 2008 final Office action, and the $810.00 petition fee.

The petition is **GRANTED**.

Petitioners filed a Change of Correspondence Address on June 4, 2009. A customer number was specified, as well as an individual/firm name that was ***different*** from that associated with the specified customer number. The customer number was entered as the new correspondence address of record. If petitioners desire a different correspondence address than the customer number, petitioners should file another Change of Correspondence Address. A courtesy copy of this decision will be mailed to the address listed on the petition. However, all future correspondence will be mailed to the customer number until appropriate documents are filed.

After the mailing of this decision, the application will be referred to Technology Center AU 3765 for consideration of the terminal disclaimer, RCE, and amendment filed on June 4, 2009.

Telephone inquiries pertaining to this decision may be directed to the undersigned at (571) 272-3230.

Shirene Willis Brantley

Shirene Willis Brantley
Senior Petitions Attorney
Office of Petitions

CC: BRUCE H. TROXELL
P.O. BOX 1370
ANNANDALE, VA 22003

UNITED STATES PATENT AND TRADEMARK OFFICE

UNDER SECRETARY OF COMMERCE FOR INTELLECTUAL PROPERTY AND
DIRECTOR OF THE UNITED STATES PATENT AND TRADEMARK OFFICE
P.O. Box 1450
Alexandria, VA. 22313-1450
WWW.USPTO.GOV

Gregory T. Lowen
Morgan Lewis & Bockius LLP
1111 Pennsylvania Avenue, NW
Washington, DC 20004

Date: November 16, 2009
Application No. 11/797,656
Filed: May 4, 2007
Subject: **MANDELIC ACID DERIVATIVES AND THEIR USE AS THROMBIN INHIBITORS**

ON PETITION
37 CFR 1.48

Receipt is acknowledged of the petition filed October 29, 2009 under 37 CFR 1.48(b) for correction of inventorship. The petition has been **GRANTED**.

In view of the papers filed, it has been found that this non-provisional application, as filed, through error and without deceptive intent, improperly set forth the Inventorship, and accordingly, this application has been changed by the **deletion of ANDERS JOHANSSON AND ARNE SVENSSON**. The application will be forwarded to the Office of Initial Patent Examination (OIPE) for issuance of a corrected filing receipt, and correction of the file jacket and PTO PALM data to reflect the inventorship as corrected.

/JOSEPH K. MCKANE/
United States Patent and Trademark Office
Technology Center 1600
SPE, ART UNIT 1626
Remsen 5A05
571-272-0699

UNITED STATES PATENT AND TRADEMARK OFFICE

Commissioner for Patents
United States Patent and Trademark Office
P.O. Box 1450
Alexandria, VA 22313-1450
www.uspto.gov

MCDERMOTT WILL & EMERY LLP
600 13TH STREET, N.W.
WASHINGTON DC 20005-3096

COPY MAILED
SEP 0 4 2007
OFFICE OF PETITIONS

In re Application of	:	
Kimura et al.	:	
Application No. 11/797686	:	DECISION
Filing or 371(c) Date: 05/07/2007	:	ON PETITION
Attorney Docket Number:	:	
050195-0567	:	

This is a decision on the "Petition and Response to Notice of Omitted Item(s) in a Nonprovisional Application", filed July 2, 2007, requesting the application be accorded a filing date of May 7, 2007 including Figures 1-7 and 9-36, described in the specification. The petition is properly treated under 37 CFR § 1.182.

The petition is granted.

Background

Application papers in the above-identified application were deposited on May 7, 2007. The Office of Initial Patent Examination (OIPE) mailed a Notice of Omitted Item(s) in a Nonprovisional Application (hereinafter "Notice"), on June 1, 2007, stating, that the application had been accorded a filing; however, Figures 1-7 and 9-36 described in the specification appeared to have been omitted from the application.

Applicant responds with the instant petition and avers that Figures 1-7 and 9-36 described in the specification were included among twenty-two (22) pages of drawings filed in with the application on May 7, 2007. In support of this assertion, Applicant files a copy of his return-receipt postcard acknowledging receipt of 22 pages of drawings by this Office on May 7, 2007.

"A postcard receipt which itemizes and properly identifies the papers which are being filed serves as *prima facie* evidence of receipt in the PTO of all items listed thereon by the PTO." MPEP § 503.

Accordingly, the petition is granted.

In view of the above, the Notice was mailed in error and is hereby withdrawn.

No petition fee has been charged and none is due.

The copy of Figures 1-7 and 9-36 filed with the petition will be used for examination purposes.

This application is being forwarded to the Office of Initial Patent Examination, Customer Corrections, for further processing, with the filing date of May 7, 2007, including Figures 1-7 and 9-36 described in the specification, using Figures 1-7 and 9-36 filed with the present petition on July 2, 2007.

Telephone inquiries concerning this matter should be directed to the undersigned at (571-272-3232.

Derek L. Woods
Attorney
Office of Petitions

UNITED STATES PATENT AND TRADEMARK OFFICE

Commissioner for Patents
United States Patent and Trademark Office
P.O. Box 1450
Alexandria, VA 22313-1450
www.uspto.gov

SHILOH ET AL.
99 JOHN STREET, SUITE 2303
NEW YORK, NY 10038

MAILED

MAY 28 2010

OFFICE OF PETITIONS

In re Application of :
David GERSHON :
Application No. 11/797,691 : DECISION GRANTING PETITION
Filed: May 7, 2007 : UNDER 37 CFR 1.313(c)(2)
Attorney Docket No. **SUP-P-00062-US1D** :

This is a decision on the petition under 37 CFR 1.313(c)(2), filed May 27, 2010, to withdraw the above-identified application from issue after payment of the issue fee.

The petition is **GRANTED**.

The above-identified application is withdrawn from issue for consideration of a submission under 37 CFR 1.114 (request for continued examination). *See* 37 CFR 1.313(c)(2).

Petitioner is advised that the issue fee paid on April 15, 2010 cannot be refunded. If, however, this application is again allowed, petitioner may request that it be applied towards the issue fee required by the new Notice of Allowance.[1]

Telephone inquiries should be directed to the undersigned at (571) 272-7253.

This application is being referred to Technology Center AU 3691 for processing of the request for continued examination under 37 CFR 1.114 and for consideration of the concurrently filed information disclosure statement.

/Monica A. Graves/
Petitions Examiner, Office of Petitions

---

[1] *The request to apply the issue fee to the new Notice may be satisfied by completing and returning the new Part B – Fee(s) Transmittal Form (along with any balance due at the time of submission). Petitioner is advised that the Issue Fee Transmittal Form* ***must*** *be completed and timely submitted to avoid abandonment of the application.*

UNITED STATES PATENT AND TRADEMARK OFFICE

UNITED STATES DEPARTMENT OF COMMERCE
United States Patent and Trademark Office
Address: COMMISSIONER FOR PATENTS
P.O. Box 1450
Alexandria, Virginia 22313-1450
www.uspto.gov

KENYON & KENYON LLP
1500 K STREET N.W.
SUITE 700
WASHINGTON, DC 20005

Mail Date: 04/21/2010

Applicant	: Charles Deville	: DECISION ON REQUEST FOR
Patent Number	: 7641529	: RECALCULATION of PATENT
Issue Date	: 01/05/2010	: TERM ADJUSTMENT IN VIEW
Appliction No	: 11/797,709	: OF WYETH AND NOTICE OF INTENT TO
Filed	: 05/07/2007	: ISSUE CERTIFICATE OF CORRECTION
		:

The Request for Recalculation is **GRANTED** to the extent indicated.

The patent term adjustment has been determined to be **0** days. The USPTO will *sua sponte* issue a certificate of correction reflecting the amount of PTA days determined by the recalculation.

Prior to the issuance of the certificate of correction, the USPTO will afford patentee an opportunity to be heard and request reconsideration. Accordingly, patentee has **one month or thirty (30) days**, whichever is longer, to file a request for reconsideration of this patent term adjustment calculation. See 35 U.S.C. 154(b)(3)(B)(ii) and 37 CFR 1.322(a)(4). No extensions of time will be granted under 37 CFR 1.136.

Patentee should use document code PET.OP if electronically filing a request for reconsideration of this patent term adjustment calculation. The patentee must also include the information required by 37 CFR 1.705(b)(2) and the fee required by 37 CFR 1.18(e). If patentee does not file a timely request for reconsideration of this patent term adjustment calculation including the information required by 37 CFR 1.705(b)(2) and the fee required by 37 CFR 1.18(e), the USPTO will issue a certificate of correction reflecting the PTA determination noted above.

Patentee should be aware that in order to preserve the right to review in the United States District Court for the District of Columbia of the USPTO patent term adjustment determination, patentee must ensure that he or she also take the steps required under 35 U.S.C. 154(b)(4)(A) in a timely manner. Nothing in the request for recalculation should be construed as providing an alternative time frame for commencing a civil action under 35 U.S.C. 154(b)(4)(A).

Any questions concerning this decision should be directed to the Office of Patent Legal Administration at 571-272-7702.

UNITED STATES PATENT AND TRADEMARK OFFICE

UNDER SECRETARY OF COMMERCE FOR INTELLECTUAL PROPERTY AND
DIRECTOR OF THE UNITED STATES PATENT AND TRADEMARK OFFICE
WASHINGTON, DC 20231
www.uspto.gov

JUN 02 2009

Kenyon & Kenyon LLP
1500 K Street N.W.
Suite 700
Washington, DC 20005

In re application of	:	DECISION ON REQUEST TO
Hindenori Saitoh et al.	:	PARTICIPATE IN PATENT
Application No. 11/797,711	:	PROSECUTION HIGHWAY
Filed: May 7, 2007	:	PROGRAM AND PETITION
For: SHIFT CONTROL APPARATUS	:	TO MAKE SPECIAL UNDER
AND METHOD FOR AUTOMATIC	:	37 CFR 1.102(d)
TRANSMISSION OF VEHICLE		

This is a decision on the request to participate in the Patent Prosecution Highway (PPH) program and the petition under 37 CFR 1.102(d), filed May 21, 2009, to make the above-identified application special.

The request and petition are **DISMSSED**.

A grantable request to participate in the PPH program and petition to make special require:

(1) The U.S. application must validly claim priority under 35 U.S.C. 119(a) to one or more applications filed in the JPO;

(2) Applicant must submit a copy of the allowable/patentable claim(s) from the JPO application(s) along with an English translation thereof and a statement that the English translation is accurate;

(3) All the claims in the U.S. application must sufficiently correspond or be amended to sufficiently correspond to the allowable/patentable claim(s) in the JPO application(s);

(4) Examination of the U.S. application has not begun;

(5) Applicant must submit a copy of all the Office actions from each of the JPO application(s) containing the allowable/patentable claim(s) along with an English translation thereof and a statement that the English translation is accurate;

(6) Applicant must submit an IDS listing the documents cited by the JPO examiner in the JPO Office action along with copies of documents except U.S. patents or U.S. patent application publications; and

(7) The required petition fee under 37 CFR 1.17(h).

The request to participate in the PPH pilot program and petition fail to include:

(3) all claims in the U.S. application must sufficiently correspond or be amended to sufficiently correspond to the allowable/patentable claim(s) in the JPO application(s);

The claims of the U.S. application do not sufficiently correspond or have been amended to sufficiently correspond to the allowable/patentable claims in the JPO application. There are no claims in the JPO application which correspond to U.S. application claims 4-6. The PPH program guidelines require that all claims in the U.S. application must sufficiently correspond or be amended to sufficiently correspond to the allowable/patentable claims in the JPO application. The PPH guidelines do not include any provision for dependent claims which are narrower in scope and include all the limitations of an allowable corresponding JP claim. Accordingly, since there are no JPO claims that correspond to U.S. claims 4-6, the PPH petition fails meet the guidelines of the PPH program.

Applicant is given a time period of **ONE MONTH or THIRTY DAYS**, whichever is longer, to correct the deficiencies. **NO EXTENSION OF TIME UNDER 37 CFR 1.136 IS PERMITTED.** If the deficiencies are not corrected with the time period given, the application will await action in its regular turn.

Response must submitted by EFS-Web using the document description "Petition to make special under Pat Pros Hwy".

Telephone inquires concerning this decision should be directed to Teri P. Luu at 571-272-7045. All other inquiries concerning the examination or status of the application should be directed to the Patent Application Information Retrieval (PAIR) system.

Teri P. Luu
Quality Assurance Specialist
Technology Center 3600

tpl: 06/01/09

UNITED STATES PATENT AND TRADEMARK OFFICE

UNDER SECRETARY OF COMMERCE FOR INTELLECTUAL PROPERTY AND
DIRECTOR OF THE UNITED STATES PATENT AND TRADEMARK OFFICE
WASHINGTON, DC 20231
www.uspto.gov

JUL 02 2009

Kenyon & Kenyon LLP
1500 K Street N.W.
Suite 700
Washington, DC 20005

In re application of Hindenori Saitoh et al. Application No. 11/797,711 Filed: May 7, 2007 For: SHIFT CONTROL APPARATUS AND METHOD FOR AUTOMATIC TRANSMISSION OF VEHICLE	: : : : : : :	DECISION ON REQUEST TO PARTICIPATE IN PATENT PROSECUTION HIGHWAY PROGRAM AND PETITION TO MAKE SPECIAL UNDER 37 CFR 1.102(d)

This is a decision on the renewed request to participate in the Patent Prosecution Highway (PPH) program and the petition under 37 CFR 1.102(d), filed June 30, 2009, to make the above-identified application special.

The request and petition are **GRANTED**.

A grantable request to participate in the PPH program and petition to make special require:

(1) The U.S. application must validly claim priority under 35 U.S.C. 119(a) to one or more applications filed in the JPO;

(2) Applicant must submit a copy of the allowable/patentable claim(s) from the JPO application(s) along with an English translation thereof and a statement that the English translation is accurate;

(3) All the claims in the U.S. application must sufficiently correspond or be amended to sufficiently correspond to the allowable/patentable claim(s) in the JPO application(s);

(4) Examination of the U.S. application has not begun;

(5) Applicant must submit a copy of all the Office actions from each of the JPO application(s) containing the allowable/patentable claim(s) along with an English translation thereof and a statement that the English translation is accurate;

(6) Applicant must submit an IDS listing the documents cited by the JPO examiner in the JPO Office action along with copies of documents except U.S. patents or U.S. patent application publications; and

(7) The required petition fee under 37 CFR 1.17(h).

A first request and petition to participate in the PPH program was filed May 21, 2009. However, that request was dismissed in a letter mailed June 2, 2009 because the JPO application did not contain allowable claims that corresponded to U.S. claims 4-6.

light of the preliminary amendment filed currently with the instant request and petition which cancels claims 4-6, all claims in the U.S. application sufficiently correspond or have been amended to sufficiently correspond to the allowable/patentable claims in the JPO application. The request to participate in the PPH program and petition now comply with the above requirements. Accordingly, the above-identified application has been accorded "special" status.

Telephone inquires concerning this decision should be directed to Teri P. Luu at 571-272-7045.

All other inquiries concerning the examination or status of the application should be directed to the Patent Application Information Retrieval (PAIR) system.

The application will be forwarded to the examiner for action on the merits commensurate with this decision.

Teri P. Luu
Quality Assurance Specialist
Technology Center 3600

tpl: 07/01/09

UNITED STATES PATENT AND TRADEMARK OFFICE

UNITED STATES DEPARTMENT OF COMMERCE
United States Patent and Trademark Office
Address: COMMISSIONER FOR PATENTS
P.O. Box 1450
Alexandria, Virginia 22313-1450
www.uspto.gov

GOWLING LAFLEUR HENDERSON LLP
SUITE 1600, 1 FIRST CANADIAN PLACE
100 KING STREET WEST
TORONTO, ON M5X 1G5
CANADA

Mail Date: 04/21/2010

Applicant	: Graham Heit	: DECISION ON REQUEST FOR
Patent Number	: 7577611	: RECALCULATION of PATENT
Issue Date	: 08/18/2009	: TERM ADJUSTMENT IN VIEW
Appliction No	: 11/797,733	: OF WYETH
Filed	: 05/07/2007	:
		:

The Patentee's Request for Recalculation is **DISMISSED.**

This Request is deemed ineligible for consideration for one or more of the following reasons:

(A). The patent for which PTA recalculation is requested is either a design or reissue application or is a reexamination proceeding;

(B). The patent for which PTA recalculation is requested resulted from a utility or plant application filed under 35 USC 111(a) before May 29, 2000 and no CPA filed in the application on/after May 29, 2000;

(C). The patent for which PTA recalculation is requested resulted from an international application in which the international filing date was before May 29, 2000 and no CPA filed in the application on/after May 29, 2000;

(D). The patent for which PTA recalculation is requested issued on/after March 2, 2010;

(E). The Request for Recalculation was filed more than 180 days after the grant date of the patent and the request was not filed within two months of a dismissal of a request for reconsideration of the of the patent term under 37 CFR 1.705(d);

(F). The Request for Recalculation is not solely limited to USPTO pre-Wyeth interpretation of 35 U.S.C. 154(b)(2)(A);

or

(G). A civil action was filed pursuant to 35 U.S.C. 154(b)(4)(A)concerning the same patent at issue in this request.

Patentee may file a reply to this decision dismissing the Request for Recalculation. Patentee must file such reply within one month or thirty days, whichever is longer, of the mail date of the decision dismissing the Request for Recalculation. No fee is required if patentee is asserting in the reply that the dismissal for ineligibility is improper.

Patentee should use document code PET.OP if electronically filing a reply to this dismissal. If the USPTO finds that the request was improperly deemed ineligible, the USPTO will mail applicant a recalculation determination.

Patentee should be aware that in order to preserve the right to review in the United States District Court for the District of Columbia of the USPTO patent term adjustment determination, patentee must ensure that he or she also take the steps required under 35 U.S.C. 154(b)(4)(A). Nothing in the request for recalculation should be construed as providing an alternative time frame for commencing a civil action under 35 U.S.C. 154 (b)(4)(A).

Any questions concerning this decision should be directed to the Office of Patent Legal Administration at 571-272-7702.

UNITED STATES PATENT AND TRADEMARK OFFICE

UNITED STATES DEPARTMENT OF COMMERCE
United States Patent and Trademark Office
Address: COMMISSIONER FOR PATENTS
P.O. Box 1450
Alexandria, Virginia 22313-1450
www.uspto.gov

APPLICATION NO.	FILING DATE	FIRST NAMED INVENTOR	ATTORNEY DOCKET NO.	CONFIRMATION NO.
11/797,748	05/07/2007	Roger Hillman	128135	8563

25944 7590 02/26/2008
OLIFF & BERRIDGE, PLC
P.O. BOX 320850
ALEXANDRIA, VA 22320-4850

EXAMINER

ART UNIT	PAPER NUMBER
3637	

MAIL DATE	DELIVERY MODE
02/26/2008	PAPER

Please find below and/or attached an Office communication concerning this application or proceeding.

The time period for reply, if any, is set in the attached communication.

UNITED STATES PATENT AND TRADEMARK OFFICE

UNITED STATES DEPARTMENT OF COMMERCE
United States Patent and Trademark Office
Address: COMMISSIONER FOR PATENTS
P.O. Box 1450
Alexandria, Virginia 22313-1450
www.uspto.gov

APPLICATION NO.	FILING DATE	FIRST NAMED INVENTOR	ATTORNEY DOCKET NO.	CONFIRMATION NO.
11/797,748	05/07/2007	Roger Hillman	128135	8563

EXAMINER

7590 02/26/2008
OLIFF & BERRIDGE, PLC
P.O. BOX 320850
ALEXANDRIA, VA 22320-4850

ART UNIT	PAPER NUMBER
3637	

MAIL DATE	DELIVERY MODE
02/26/2008	PAPER

DECISION DISMISSING PETITION UNDER 37 CFR 1.138(d)

The declaration of express abandonment will not be recognized

This is in response to the petition under 37 CFR 1.138(d), requesting for a refund of any previously paid search fee and excess claims fee in the above-identified application.

The petition is dismissed.

The express abandonment will **not** be recognized for the reason(s) indicated below:

1. ☐ The petition was not filed in sufficient time to permit the appropriate officials to recognize the abandonment before an examination has been made of the application. See 37 CFR 1.138(d).
2. ☒ The petition was not signed by a party authorized by 37 CFR 1.33(b)(1), (3) or (4).
3. ☐ The application is not an application filed under 35 U.S.C. 111(a) on or after December 8, 2004.
4. ☐ The petition for express abandonment under 1.138(d) is dismissed because the applicant did not pay any search fee and excess claims fees in the above-identified application.

Telephone inquiries should be directed to the Office of Data Management at (571) 272-4200.

L. Fletcher
Patent Publication Branch
Office of Data Management

FORM PET651D (Rev. 08/07)

UNITED STATES PATENT AND TRADEMARK OFFICE

UNITED STATES DEPARTMENT OF COMMERCE
United States Patent and Trademark Office
Address: COMMISSIONER FOR PATENTS
P.O. Box 1450
Alexandria, Virginia 22313-1450
www.uspto.gov

APPLICATION NO.	FILING DATE	FIRST NAMED INVENTOR	ATTORNEY DOCKET NO.	CONFIRMATION NO.
11/797,748	05/07/2007	Roger Hillman	128135	8563

7590 03/12/2009
OLIFF & BERRIDGE, PLC
P.O. BOX 320850
ALEXANDRIA, VA 22320-4850

EXAMINER
SHAPIRO, JEFFERY A

ART UNIT	PAPER NUMBER
3653	

MAIL DATE	DELIVERY MODE
03/12/2009	PAPER

DECISION GRANTING PETITION UNDER 37 CFR 1.138(d)

The declaration of express abandonment is recognized

This is in response to the petition under 37 CFR 1.138(d), requesting for a refund of any previously paid search fee and excess claims fee in the above-identified application.

The petition is granted.

The express abandonment is recognized. Any previously paid search fee and excess claims fee are hereby refunded.

Telephone inquiries should be directed to the Office of Data Management at (571) 272-4200.

Nioni Farmer

Patent Publication Branch
Office of Data Management

Refund Ref:
03/13/2009 NFARMER 0000166487

CHECK Refund Total: $500.00

Adjustment date: 03/13/2009 NFARMER
05/08/2007 SZEWDIE1 00000031 11797748
02 FC:1111 -500.00 OP

FORM PET651G (Rev. 08/07)

UNITED STATES PATENT AND TRADEMARK OFFICE

Commissioner for Patents
United States Patent and Trademark Office
P.O. Box 1450
Alexandria, VA 22313-1450
www.uspto.gov

COPY MAILED

MAR 07 2008

OFFICE OF PETITIONS

REED SMITH LLP
3110 FAIRVIEW PARK DRIVE, SUITE 1400
FALLS CHURCH VA 22042

In re Application of :
Aritsuka et al. : DECISION ON PETITION
Application No. 11/797,749 :
Deposited: May 7, 2007 :
Attorney Dkt. No. ASAM.0247 :
Title: Sensor-Net Systems and Its :
Application Systems for Locating :

This is a decision on the "Petition and Response to Notice of Incomplete Nonprovisional Application" filed July 20, 2007, requesting that the above-identified application be accorded the filing date of May 7, 2007. This petition is being treated pursuant to 37 CFR 1.53(e)(2).

The petition is **GRANTED**.

On May 31,2007, the Office of Patent Application Processing mailed a "Notice of Incomplete Nonprovisional Application", notifying applicants that the application papers had **not** been accorded a filing date because the application was deposited without a complete specification including at least one claim pursuant to 35 U.S.C. 112.

In response, the present petition was filed on July 20, 2007. The petition contends that the application as filed contained a complete specification including at least one claim pursuit to 35 U.S.C. 112. In support, the petition is accompanied by a copy of applicants' postcard receipt which acknowledges receipt in the office of "90 pages of specification with 20 claims and 1p abstract". Petitioner has also provided a copy of the claims, specification and abstract.

Applicants' postcard receipt is prima facie[1] evidence that 90 pages of specification, 20 claims and abstract were received on May 7, 2007, but a complete specification with at least one claim

[1]A postcard receipt which itemizes and properly identifies the items which are being filed serves as prima facie evidence of receipt in the office of all items listed thereon. See MPEP 503.

and abstract are not present in the file.

The petition fee of $400.00 will be refunded.

Since the original pages of specification including at least one claim and abstract have not been located, the papers submitted on July 20, 2007 will be used for processing and examination purposes.

The application will be returned to the Office of Patent Application Processing for further processing with a **filing date of May 7, 2007**, using the papers submitted on that day and the copy of the specification and abstract provided on July 20, 2007.

Telephone inquiries related to this decision may be directed to the undersigned at (571) 272-3215.

Charlema Grant

Charlema Grant
Petitions Attorney
Office of Petitions

UNITED STATES PATENT AND TRADEMARK OFFICE

UNITED STATES DEPARTMENT OF COMMERCE
United States Patent and Trademark Office
Address: COMMISSIONER FOR PATENTS
P.O. Box 1450
Alexandria, Virginia 22313-1450
www.uspto.gov

JACOBSON HOLMAN PLLC
400 SEVENTH STREET N.W.
SUITE 600
WASHINGTON, DC 20004

Mail Date: 04/27/2010

Applicant	: Allan P. Henderson	: DECISION ON REQUEST FOR
Patent Number	: 7618217	: RECALCULATION of PATENT
Issue Date	: 11/17/2009	: TERM ADJUSTMENT IN VIEW
Application No	: 11/797,772	: OF WYETH AND NOTICE OF INTENT TO
Filed	: 05/07/2007	: ISSUE CERTIFICATE OF CORRECTION
		:

The Request for Recalculation is **GRANTED** to the extent indicated.

The patent term adjustment has been determined to be **0** days. The USPTO will *sua sponte* issue a certificate of correction reflecting the amount of PTA days determined by the recalculation.

Prior to the issuance of the certificate of correction, the USPTO will afford patentee an opportunity to be heard and request reconsideration. Accordingly, patentee has **one month or thirty (30) days**, whichever is longer, to file a request for reconsideration of this patent term adjustment calculation. See 35 U.S.C. 154(b)(3)(B)(ii) and 37 CFR 1.322(a)(4). No extensions of time will be granted under 37 CFR 1.136.

Patentee should use document code PET.OP if electronically filing a request for reconsideration of this patent term adjustment calculation. The patentee must also include the information required by 37 CFR 1.705(b)(2) and the fee required by 37 CFR 1.18(e). If patentee does not file a timely request for reconsideration of this patent term adjustment calculation including the information required by 37 CFR 1.705(b)(2) and the fee required by 37 CFR 1.18(e), the USPTO will issue a certificate of correction reflecting the PTA determination noted above.

Patentee should be aware that in order to preserve the right to review in the United States District Court for the District of Columbia of the USPTO patent term adjustment determination, patentee must ensure that he or she also take the steps required under 35 U.S.C. 154(b)(4)(A) in a timely manner. Nothing in the request for recalculation should be construed as providing an alternative time frame for commencing a civil action under 35 U.S.C. 154(b)(4)(A).

Any questions concerning this decision should be directed to the Office of Patent Legal Administration at 571-272-7702.

1
2
3
4
5
6
7
8
9
10
11
12
13
14
15
16
17

EAST Search History

EAST Search History (Prior Art)

Ref #	Hits	Search Query	DBs	Default Operator	Plurals	Time Stamp
S1	0	224/117.21	US-PGPUB; USPAT; JPO	OR	ON	2009/07/02 08:09
S2	1421	206/499	US-PGPUB; USPAT; JPO	OR	ON	2009/07/02 08:09
S3	0	224/117.21	US-PGPUB; USPAT; JPO	OR	ON	2009/07/02 08:10
S4	284	229/112	US-PGPUB; USPAT; JPO	OR	ON	2009/07/02 08:13
S5	1	224/111	US-PGPUB; USPAT; JPO	OR	ON	2009/07/02 08:13
S6	0	224/117.21	US-PGPUB; USPAT; JPO	OR	ON	2009/07/02 08:15
S7	1	"6206243".pn.	US-PGPUB; USPAT; JPO	OR	ON	2009/07/02 08:31
S8	447	(triang$4 or three$1sided or (three adj side$1) or penta$1hedron$2) same (box or container) same prism	US-PGPUB; USPAT; JPO	OR	ON	2009/07/02 10:41
S9	642	(triang$4 or three$1sided or (three adj side$1) or penta$1hedron$2) same (box or container) same prism	US-PGPUB; USPAT; USOCR; FPRS; EPO	OR	ON	2009/07/02 10:42
S10	642	(triang$4 or three$1sided or (three adj side$1) or penta$1hedron$2) same (box or container) same prism	US-PGPUB; USPAT; USOCR; FPRS; EPO	OR	ON	2009/07/02 10:42

S11	5016	(206/499,268,271,273,526,822,436.ccls. or 229/112,113.ccls.)	US-PGPUB; USPAT; USOCR; FPRS; EPO	OR	ON	2009/07/02 10:56
S12	13	S10 and S11	US-PGPUB; USPAT; USOCR; FPRS; EPO	OR	ON	2009/07/02 10:56
S13	0	3727803A.pn.	US-PGPUB; USPAT; USOCR; FPRS; EPO	OR	ON	2009/07/02 12:05
S14	0	"3727803A.pn"	US-PGPUB; USPAT; USOCR; FPRS; EPO	OR	ON	2009/07/02 12:06
S15	0	"3727803.pn."	US-PGPUB; USPAT; USOCR; FPRS; EPO	OR	ON	2009/07/02 12:06
S16	7	"1240088"	EPO; DERWENT	OR	ON	2009/07/02 15:46
S17	0	"1240088"	EPO	OR	ON	2009/07/02 15:47
S18	7	"1240088"	EPO; DERWENT	OR	ON	2009/07/02 15:50
S19	2	"2803391".pn.	EPO; DERWENT	OR	ON	2009/07/02 17:39
S20	0	"2803391".pn.	US-PGPUB	OR	ON	2009/07/02 17:39
S21	1	"2803391".pn.	US-PGPUB; USPAT	OR	ON	2009/07/02 17:40

S22	1421	206/499	US-PGPUB; USPAT; JPO	OR	ON	2009/07/05 10:29
S23	533	206/268	US-PGPUB; USPAT; JPO	OR	ON	2009/07/05 10:29
S24	416	206/271	US-PGPUB; USPAT; JPO	OR	ON	2009/07/05 10:31
S25	548	206/273	US-PGPUB; USPAT; JPO	OR	ON	2009/07/05 10:33
S26	1034	206/526	US-PGPUB; USPAT; JPO	OR	ON	2009/07/05 10:36
S27	999	206/822	US-PGPUB; USPAT; JPO	OR	ON	2009/07/05 10:36
S28	56	206/436	US-PGPUB; USPAT; JPO	OR	ON	2009/07/05 10:36
S29	284	229/112	US-PGPUB; USPAT; JPO	OR	ON	2009/07/05 10:37
S30	212	229/113	US-PGPUB; USPAT; JPO	OR	ON	2009/07/05 10:37
S31	12323	trapezoid$3 and (carton or box or pageboard or boxboard or cardboard or containerboard or fiberboard or pasteboard)	USPAT	OR	ON	2010/01/22 18:28
S32	31494	trapezoid$3 and (carton or box or pageboard or boxboard or cardboard or containerboard or fiberboard or pasteboard)	US-PGPUB; USPAT; USOCR; FPRS; EPO; DERWENT	OR	ON	2010/01/22 18:29
S33	0	"229"/$.ccls	US-PGPUB; USPAT; USOCR; FPRS; EPO; DERWENT	OR	ON	2010/01/22 18:29

S34	0	S32 and S33	US-PGPUB; USPAT; USOCR; FPRS; EPO; DERWENT	OR	ON	2010/01/22 18:30
S35	311	229/112	US-PGPUB; USPAT; USOCR; FPRS; EPO; DERWENT	OR	ON	2010/01/22 18:31
S36	52	S32 and S35	US-PGPUB; USPAT; USOCR; FPRS; EPO; DERWENT	OR	ON	2010/01/22 18:31
S37	25	isoceles adj trapezoid$3 and (carton or box or pageboard or boxboard or cardboard or containerboard or fiberboard or pasteboard)	US-PGPUB; USPAT; USOCR; FPRS; EPO; DERWENT	OR	ON	2010/01/22 18:32
S38	217	229/113	US-PGPUB; USPAT; USOCR; FPRS; EPO; DERWENT	OR	ON	2010/01/22 18:34
S39	0	S37 and S38	US-PGPUB; USPAT; USOCR; FPRS; EPO; DERWENT	OR	ON	2010/01/22 18:35

S40	173	229/152	US-PGPUB; USPAT; USOCR; FPRS; EPO; DERWENT	OR	ON	2010/01/22 18:35
S41	0	S37 and S40	US-PGPUB; USPAT; USOCR; FPRS; EPO; DERWENT	OR	ON	2010/01/22 18:35
S42	143	trapizoid$3	US-PGPUB; USPAT; USOCR; FPRS; EPO; DERWENT	OR	ON	2010/01/22 18:36
S43	173	229/152	US-PGPUB; USPAT; USOCR; FPRS; EPO; DERWENT	OR	ON	2010/01/22 18:36
S44	0	S42 and S43	US-PGPUB; USPAT; USOCR; FPRS; EPO; DERWENT	OR	ON	2010/01/22 18:36
S45	0	isosceles adj trapizoid	US-PGPUB; USPAT; USOCR; FPRS; EPO; DERWENT	OR	ON	2010/01/22 18:37

S46	1	isosceles adj trapizoid$3	US-PGPUB; USPAT; USOCR; FPRS; EPO; DERWENT	OR	ON	2010/01/22 18:37
S47	0	(229/$.ccls).CCLS.	USPAT; USOCR	OR	OFF	2010/01/22 18:44
S48	0	(206/$.ccls).CCLS.	USPAT; USOCR	OR	OFF	2010/01/22 18:45
S49	0	206/112.ccls	USPAT	OR	ON	2010/01/22 18:46
S50	0	229/112.ccls	USPAT	OR	ON	2010/01/22 18:46
S51	291	229/112	USPAT	OR	ON	2010/01/22 18:46
S52	116	trapizoid$3	USPAT	OR	ON	2010/01/22 18:48
S53	0	"206"/$.ccls	USPAT	OR	ON	2010/01/22 18:49
S54	76815	"206"/$.ccls.	USPAT	OR	ON	2010/01/22 18:49
S55	1028	S32 and S54	USPAT	OR	ON	2010/01/22 18:49
S56	0	S37 and S43	USPAT	OR	ON	2010/01/22 18:49
S57	1	S37 and S54	USPAT	OR	ON	2010/01/22 18:50
S58	34984	"229"/$.ccls.	USPAT	OR	ON	2010/01/22 18:51
S59	3	S37 and S58	USPAT	OR	ON	2010/01/22 18:51

S60	37	("1900420" | "2605954" | "2803391" | "2803395" | "20020190110" | "20020190119" | "20030116612" | "4081126" | "4738359" | "5337948" | "5873514" | "6244017" | "6592023" | "6929120").PN.	US-PGPUB; USPAT; USOCR; FPRS; DERWENT	OR	ON	2010/01/22 18:53
S61	2	("2605954").URPN.	USPAT	OR	ON	2010/01/22 19:03
S62	241	("0581339" | "0812175" | "0874337" | "0885374" | "0898125" | "1016148" | "1028438" | "1077322" | "1150443" | "1152429" | "1464182" | "1510429" | "1546074" | "1582925" | "1588677" | "1701316" | "1711971" | "1746030" | "1770920" | "1793026" | "1897702" | "1911215" | "1923452" | "1986145" | "1996997" | "2072695" | "2112801" | "2138916" | "2157255" | "2163828" | "2179227" | "2192307" | "2283856" | "2329866" | "2605897" | "2717073" | "2804254" | "2895601" | "2965280" | "2969629" | "2983372" | "2983424" | "3027998" | "3051305" | "3066843" | "3071244" | "3075683" | "3079064" | "3082929" | "3086650" | "3113673" | "3163351" | "3226010" | "3278016" | "3536246" | "3550834" | "3596758" | "3695422" | "3721335" | "3752308" | "3832823" | "3832832" | "3891136" | "3929271" | "4089457" | "4095735" | "4121752" | "4204630" | "4216898" | "4251022" | "4253601" | "4372476" | "4425731" | "4620664" | "4631900" | "4738359" | "4784261" | "4923059" | "4925087" | "4997082" | "5097948" | "5143282" | "5214901" | "5238140" | "5375704" | "5481848" | "5526559" | "5529180" | "5542529" | "5806671" | "5873514" | "5896984" | "5934461" | "6016916" | "6276600" | "6302322" | "6311834" | "6370846" | "6484930" | "Re19029").PN. OR ("1900420" | "2002/0190110" | "2002/0190119" | "2003/0116612" | "2605954" | "2803391" | "2803395" | "4081126" | "4738359" | "5337948" | "5873514" | "6244017" | "6592023"	US-PGPUB; USPAT; USOCR	OR	ON	2010/01/22 19:04

		| "6929120").URPN.				
S63	2	("2605954").URPN.	USPAT	OR	ON	2010/01/22 19:12

EAST Search History (Interference)

< This search history is empty>

6/15/2010 3:22:57 PM
H:\ rigid wrapper containning packets of cigarettes.wsp

UNITED STATES PATENT AND TRADEMARK OFFICE

UNITED STATES DEPARTMENT OF COMMERCE
United States Patent and Trademark Office
Address: COMMISSIONER FOR PATENTS
P.O. Box 1450
Alexandria, Virginia 22313-1450
www.uspto.gov

BACON & THOMAS, PLLC
625 SLATERS LANE
FOURTH FLOOR
ALEXANDRIA, VA 22314-1176

Mail Date: 07/13/2010

Applicant	: Kuo-Hsiung Ho	: DECISION ON REQUEST FOR
Patent Number	: 7641090	: RECALCULATION of PATENT
Issue Date	: 01/05/2010	: TERM ADJUSTMENT IN VIEW
Application No	: 11/797,788	: OF WYETH AND NOTICE OF INTENT TO
Filed	: 05/08/2007	: ISSUE CERTIFICATE OF CORRECTION
		:

The Request for Recalculation is **GRANTED** to the extent indicated.

The patent term adjustment has been determined to be **295** days. The USPTO will *sua sponte* issue a certificate of correction reflecting the amount of PTA days determined by the recalculation.

Prior to the issuance of the certificate of correction, the USPTO will afford patentee an opportunity to be heard and request reconsideration. Accordingly, patentee has **one month or thirty (30) days**, whichever is longer, to file a request for reconsideration of this patent term adjustment calculation. See 35 U.S.C. 154(b)(3)(B)(ii) and 37 CFR 1.322(a)(4). No extensions of time will be granted under 37 CFR 1.136.

Patentee should use document code PET.OP if electronically filing a request for reconsideration of this patent term adjustment calculation. The patentee must also include the information required by 37 CFR 1.705(b)(2) and the fee required by 37 CFR 1.18(e). If patentee does not file a timely request for reconsideration of this patent term adjustment calculation including the information required by 37 CFR 1.705(b)(2) and the fee required by 37 CFR 1.18(e), the USPTO will issue a certificate of correction reflecting the PTA determination noted above.

Patentee should be aware that in order to preserve the right to review in the United States District Court for the District of Columbia of the USPTO patent term adjustment determination, patentee must ensure that he or she also take the steps required under 35 U.S.C. 154(b)(4)(A) in a timely manner. Nothing in the request for recalculation should be construed as providing an alternative time frame for commencing a civil action under 35 U.S.C. 154(b)(4)(A).

Any questions concerning this decision should be directed to the Office of Patent Legal Administration at 571-272-7702.

UNITED STATES PATENT AND TRADEMARK OFFICE

UNITED STATES DEPARTMENT OF COMMERCE
United States Patent and Trademark Office
Address: COMMISSIONER FOR PATENTS
P.O. Box 1450
Alexandria, Virginia 22313-1450
www.uspto.gov

APPLICATION NO.	FILING DATE	FIRST NAMED INVENTOR	ATTORNEY DOCKET NO.	CONFIRMATION NO.
11/797,892	05/08/2007	Ho-Seok Lee	P58360	2276

7590 10/22/2009
ROBERT E. BUSHNELL & LAW FIRM
2029 K STREET NW
SUITE 600
WASHINGTON, DC 20006-1004

EXAMINER
HANLEY, BRITT D

ART UNIT	PAPER NUMBER
2889	

MAIL DATE	DELIVERY MODE
10/22/2009	PAPER

DECISION GRANTING PETITION UNDER 37 CFR 1.138(d)

The declaration of express abandonment is recognized

This is in response to the petition under 37 CFR 1.138(d), requesting for a refund of any previously paid search fee and excess claims fee in the above-identified application.

The petition is granted.

The express abandonment is recognized. Any previously paid search fee and excess claims fee are hereby refunded.

Telephone inquiries should be directed to the Office of Data Management at (571) 272-4200.

Tomi Farmer

Patent Publication Branch
Office of Data Management

Repin. Ref: 10/22/2009 NFARMER C017411700
LAW:024943 Name/Number:11797892
FC: 9234 $500.00 CR

Adjustment date: 10/22/2009 NFARMER
05/09/2007 SZENDIE1 00000123 11797892
02 FC:1111 -500.00 OP

FORM PET651G (Rev. 08/07)

UNITED STATES PATENT AND TRADEMARK OFFICE

Commissioner for Patents
United States Patent and Trademark Office
P.O. Box 1450
Alexandria, VA 22313-1450
www.uspto.gov

SMITH, GAMBRELL & RUSSELL
SUITE 800
1850 M STREET, N.W.
WASHINGTON DC 20036

COPY MAILED

MAY 1 3 2008

OFFICE OF PETITIONS

In re Application of	:	
McLemore et al.	:	
Application No. 11/797899	:	ON PETITION
Deposited: 05/08/2007	:	
Attorney Docket No. 032161R014CON	:	

This is in response to the "PETITION UNDER 1.57(A) IN ASSOCIATION WITH A NOTICE OF INCOMPLETE APPLICATION" filed on March 28, 2008, requesting that the above-referenced application be accorded a filing date of May 8, 2007. This petition is being treated pursuant to 37 CFR 1.53(e)(2)[1].

Application papers in the above-identified application were deposited on May 8, 2007. However, on March 18, 2008, the Office of Patent Application Processing mailed applicants a "Notice of Incomplete Nonprovisional Application," notifying applicants that the application papers had not been accorded a filing date because the application was deposited without drawings. In response, applicants timely filed this petition. Applicants request that the application be amended to include the inadvertently omitted drawings on the basis that the application as filed contained a prior benefit claim under 37 CFR 1.55 or 1.78.

Petitioner's arguments and evidence have been considered. However, a review of the application confirms that, as filed, the application contained at least one method claim. MPEP 601.01(f) provides that:

> It has been USPTO practice to treat an application that contains at least one process or method claim as an application for which a drawing is not necessary for an understanding of the invention under 35 U.S.C. 113 (first sentence).

Thus, pursuant to § 601.01(f), a drawing is not considered essential for a filing date. The instant application is entitled to a filing date without drawings present in the application.

[1] Any request for review of a notification pursuant to paragraph (e)(1) of this section, or a notification that the original application papers lack a portion of the specification or drawing(s), must be by way of a petition pursuant to this paragraph accompanied by the fee set forth in § 1.17(f). In the absence of a timely (§ 1.181(f)) petition pursuant to this paragraph, the filing date of an application in which the applicant was notified of a filing error pursuant to paragraph (e)(1) of this section will be the date the filing error is corrected.

Accordingly, the Office should have granted the application a filing date and mailed a Notice of Omitted Items instead of a Notice of Incomplete Nonprovisional Application. As stated in MPEP 601.01(g) under the section entitled, "Application Entitled to a Filing Date," applicant may submit an amendment to include the inadvertently omitted portion of the drawing(s) pursuant to 37 CFR 1.57(a):

> [i]f an application was filed on or after September 21, 2004, and contains a claim under 37 CFR 1.55 for priority of a prior-filed foreign application, or a claim under 37 CFR 1.78 for the benefit of a prior-filed provisional, nonprovisional, or international application that was present on the filing date of the application, and the omitted portion of the drawing(s) was inadvertently omitted from the application and is completely contained in the prior-filed application[.]

Please note that no petition is required and that the amendment must comply with 37 CFR 1.57(a) and 37 CFR 1.121. See MPEP § 201.17. Any amendment to include the inadvertently omitted drawing(s) will be considered by the examiner.

To the extent the instant petition requests a filing date of May 8, 2007 with no drawings present in the application, the petition is **GRANTED**.

Given the basis for granting this petition, the petition fee is being refunded.

Pursuant to this decision, the application will be referred to Office of Patent Application Processing for:

- **correction of the filing date to May 8, 2007**;
- **for indication in Office records, as appropriate, that "0" sheets of drawings were present on filing** and
- **for issuance of a filing receipt.**

Entry of the amendment filed on March 28, 2008 will be determined by the examiner.

Telephone inquiries concerning this matter may be directed to Senior Petitions Attorney Douglas I. Wood at (571) 272-3231.

Anthony Knight
Supervisor
Office of Petitions

UNITED STATES PATENT AND TRADEMARK OFFICE

UNITED STATES DEPARTMENT OF COMMERCE
United States Patent and Trademark Office
Address: COMMISSIONER FOR PATENTS
P.O. Box 1450
Alexandria, Virginia 22313-1450
www.uspto.gov

BACON & THOMAS, PLLC
625 SLATERS LANE
FOURTH FLOOR
ALEXANDRIA, VA 22314-1176

Mail Date: 06/03/2010

Applicant	: Wen-Chiung Su	: DECISION ON REQUEST FOR
Patent Number	: 7626051	: RECALCULATION of PATENT
Issue Date	: 12/01/2009	: TERM ADJUSTMENT IN VIEW
Application No	: 11/797,936	: OF WYETH AND NOTICE OF INTENT TO
Filed	: 05/09/2007	: ISSUE CERTIFICATE OF CORRECTION
		:

The Request for Recalculation is **GRANTED** to the extent indicated.

The patent term adjustment has been determined to be **232** days. The USPTO will *sua sponte* issue a certificate of correction reflecting the amount of PTA days determined by the recalculation.

Prior to the issuance of the certificate of correction, the USPTO will afford patentee an opportunity to be heard and request reconsideration. Accordingly, patentee has **one month or thirty (30) days**, whichever is longer, to file a request for reconsideration of this patent term adjustment calculation. See 35 U.S.C. 154(b)(3)(B)(ii) and 37 CFR 1.322(a)(4). No extensions of time will be granted under 37 CFR 1.136.

Patentee should use document code PET.OP if electronically filing a request for reconsideration of this patent term adjustment calculation. The patentee must also include the information required by 37 CFR 1.705(b)(2) and the fee required by 37 CFR 1.18(e). If patentee does not file a timely request for reconsideration of this patent term adjustment calculation including the information required by 37 CFR 1.705(b)(2) and the fee required by 37 CFR 1.18(e), the USPTO will issue a certificate of correction reflecting the PTA determination noted above.

Patentee should be aware that in order to preserve the right to review in the United States District Court for the District of Columbia of the USPTO patent term adjustment determination, patentee must ensure that he or she also take the steps required under 35 U.S.C. 154(b)(4)(A) in a timely manner. Nothing in the request for recalculation should be construed as providing an alternative time frame for commencing a civil action under 35 U.S.C. 154(b)(4)(A).

Any questions concerning this decision should be directed to the Office of Patent Legal Administration at 571-272-7702.

UNITED STATES PATENT AND TRADEMARK OFFICE

Commissioner for Patents
United States Patent and Trademark Office
P.O. Box 1450
Alexandria, VA 22313-1450
www.uspto.gov

BIRCH STEWART KOLASCH & BIRCH
P.O. BOX 747
FALLS CHURCH, VA 22040-0747

COPY MAILED

AUG 17 2009

OFFICE OF PETITIONS

In re Application of :
Yong Cheol Park et al :
Application No. 11/798,009 : ON PETITION
Filed: May 9, 2007 :
Attorney Docket No. 0465-1034PUS2

This is a decision on the petition, filed August 12, 2009 under 37 CFR 1.313(c)(2) to withdraw the above-identified application from issue after payment of the issue fee.

The petition is **GRANTED**.

The above-identified application is withdrawn from issue for consideration of a submission under 37 CFR 1.114 (request for continued examination). See 37 CFR 1.313(c)(2).

Petitioner is advised that the issue fee paid on May 14, 2009 in the above-identified application cannot be refunded. If, however, the above-identified application is again allowed, petitioner may request that it be applied towards the issue fee required by the new Notice of Allowance.[1]

Telephone inquiries should be directed to Irvin Dingle at (571) 272-3210.

This matter is being referred to Technology Center AU 2627 for processing of the request for continued examination under 37 CFR 1.114 and for consideration of the concurrently filed Information Disclosure Statement.

/Irvin Dingle/
Irvin Dingle
Petitions Examiner
Office of Petitions

---

[1] The request to apply the issue fee to the new Notice may be satisfied by completing and returning the new Issue Fee Transmittal Form PTOL-85(b), which includes the following language thereon: Commissioner for Patents is requested to apply the Issue Fee and Publication Fee (if any) or re-apply any previously paid issue fee to the application identified above. Petitioner is advised that, whether a fee is indicated as being due or not, the Issue Fee Transmittal Form **must** be completed and timely submitted to avoid abandonment. Note the language in bold text on the first page of the Notice of Allowance and Fee(s) Due (PTOL-85).

UNITED STATES PATENT AND TRADEMARK OFFICE

Commissioner for Patents
United States Patent and Trademark Office
P.O. Box 1450
Alexandria, VA 22313-1450
www.uspto.gov

MILES & STOCKBRIDGE PC
1751 PINNACLE DRIVE
SUITE 500
MCLEAN, VA 22102-3833

COPY MAILED

JUN 12 2008

OFFICE OF PETITIONS

In re Application of	:	
Patrick J. Fitzgibbons	:	
Application No. 11/798,018	:	DECISION GRANTING PETITION
Filed: May 9, 2007	:	UNDER 37 CFR 1.313(c)(2)
Attorney Docket No. T3498-11470US01	:	

This is a decision on the petition under 37 CFR 1.313(c)(2), filed June 11, 2008, to withdraw the above-identified application from issue after payment of the issue fee.

The petition is **GRANTED**.

The above-identified application is withdrawn from issue for consideration of a submission under 37 CFR 1.114 (request for continued examination). *See* 37 CFR 1.313(c)(2).

Petitioner is advised that the issue fee paid on December 28, 2007 cannot be refunded. If, however, this application is again allowed, petitioner may request that it be applied towards the issue fee required by the new Notice of Allowance.[1]

Telephone inquiries regarding this decision should be directed to undersigned at (571) 272-1642.

This application is being referred to Technology Center AU 3661 for processing of the request for continued examination under 37 CFR 1.114 and for consideration of the concurrently filed amendment and information disclosure statement.

April M. Wise
Petitions Examiner
Office of Petitions

---

[1] *The request to apply the issue fee to the new Notice may be satisfied by completing and returning the new Part B – Fee(s) Transmittal Form (along with any balance due at the time of submission). Petitioner is advised that the Issue Fee Transmittal Form* ***must*** *be completed and timely submitted to avoid abandonment of the application.*

UNITED STATES PATENT AND TRADEMARK OFFICE

Commissioner for Patents
United States Patent and Trademark Office
P.O. Box 1450
Alexandria, VA 22313-1450
www.uspto.gov

MILES & STOCKBRIDGE PC
1751 PINNACLE DRIVE
SUITE 500
MCLEAN, VA 22102-3833

COPY MAILED

NOV 1 2 2008

OFFICE OF PETITIONS

In re Application of :
Patrick J. Fitzgibbons :
Application No.: 11/798,018 : ON PETITION
Filed: May 9, 2007 :
Attorney Docket No.: T3497-11470US01 :

This is a decision on the petition, filed November 10, 2008, under 37 CFR 1.313(c)(2) to withdraw the above-identified application from issue after payment of the issue fee.

The petition is **GRANTED**.

The above-identified application is withdrawn from issue for consideration of a submission under 37 CFR 1.114 (request for continued examination). See 37 CFR 1.313(c)(2).

Petitioner is advised that the issue fee paid on October 6, 2008, cannot be refunded. If, however, this application is again allowed, petitioner may request that it be applied towards the issue fee required by the new Notice of Allowance.[1]

Telephone inquiries relating to this decision should be directed to the undersigned at (571) 272-3204.

The application is being referred to Technology Center AU 3661 for further processing of the request for continued examination under 37 CFR 1.114 and for consideration of the concurrently filed Information Disclosure Statement (IDS).

/SDB/

Sherry D. Brinkley
Petitions Examiner
Office of Petitions

[1] *The request to apply the issue fee to the new Notice may be satisfied by completing and returning the new Part B - Fee(s) Transmittal Form (along with any balance due at the time of submission). Petitioner is advised that the Issue Fee Transmittal Form* ***must*** *be completed and timely submitted to avoid abandonment of the application.*

UNITED STATES PATENT AND TRADEMARK OFFICE

UNITED STATES DEPARTMENT OF COMMERCE
United States Patent and Trademark Office
Address: COMMISSIONER FOR PATENTS
P.O. Box 1450
Alexandria, Virginia 22313-1450
www.uspto.gov

APPLICATION NO.	FILING DATE	FIRST NAMED INVENTOR	ATTORNEY DOCKET NO.	CONFIRMATION NO.
11/798,028	05/09/2007	Yoon-Cheol Jeon	P58200	1173

8439 7590 01/07/2010
ROBERT E. BUSHNELL & LAW FIRM
2029 K STREET NW
SUITE 600
WASHINGTON, DC 20006-1004

EXAMINER
TSO, EDWARD H

ART UNIT	PAPER NUMBER
2858	

NOTIFICATION DATE	DELIVERY MODE
01/07/2010	ELECTRONIC

Please find below and/or attached an Office communication concerning this application or proceeding.

The time period for reply, if any, is set in the attached communication.

Notice of the Office communication was sent electronically on above-indicated "Notification Date" to the following e-mail address(es):

rebushnell@aol.com
mail@rebushnell.com
info@rebushnell.com

UNITED STATES PATENT AND TRADEMARK OFFICE

COMMISSIONER FOR PATENTS
UNITED STATES PATENT AND TRADEMARK OFFICE
WASHINGTON, D.C. 20231
www.uspto.gov

ROBERT E. BUSHNELL & LAW FIRM
2029 K STREET NW
SUITE 600
WASHINGTON DC 20006-1004

Applicant : Yoon-Cheol Jeong et al.
Application No.: 11/798,028
Filed: May 9, 2007

DECISION GRANTING PETITION UNDER *37 CFR 1.181*

This decision is in response to the petition filed December 4, 2009 in the above-identified application.

Petitioner requests confirmation of filing and receipt of the foreign priority documents in the above-identified application.

A review of the official Office records indicates Applicants had filed a certified copy of Korean priority application No. 10-2006-0051953 on May 9, 2007, which is cited in the foreign priority claim of the Declaration filed on May 9, 2007.

The papers filed on May 9, 2007, fulfill the requirements of 35 USC 119(a)-(d) and the petition is granted.

SUMMARY: The petition is **granted.**

Patrick Assouad
Supervisory Patent Examiner
AU2858

UNITED STATES PATENT AND TRADEMARK OFFICE

UNITED STATES DEPARTMENT OF COMMERCE
United States Patent and Trademark Office
Address: COMMISSIONER FOR PATENTS
P.O. Box 1450
Alexandria, Virginia 22313-1450
www.uspto.gov

BIB DATA SHEET

CONFIRMATION NO. 1173

SERIAL NUMBER	FILING or 371(c) DATE	CLASS	GROUP ART UNIT	ATTORNEY DOCKET NO.
11/798,028	05/09/2007 RULE	320	2858	P58200

APPLICANTS

Yoon-Cheol Jeon, Suwon-si, KOREA, REPUBLIC OF;
Tae-Yong Kim, Suwon-si, KOREA, REPUBLIC OF;

**** CONTINUING DATA ****************************

**** FOREIGN APPLICATIONS ****************************

REPUBLIC OF KOREA 10-2006-0051953 06/09/2006

**** IF REQUIRED, FOREIGN FILING LICENSE GRANTED ****

06/01/2007

		STATE OR COUNTRY	SHEETS DRAWINGS	TOTAL CLAIMS	INDEPENDENT CLAIMS
Foreign Priority claimed ☑ Yes ☐ No 35 USC 119(a-d) conditions met ☑ Yes ☐ No Verified and Acknowledged /EDWARD H TSO/ Examiner's Signature	☐ Met after Allowance Initials	KOREA, REPUBLIC OF	6	18	1

ADDRESS

ROBERT E. BUSHNELL & LAW FIRM
2029 K STREET NW
SUITE 600
WASHINGTON, DC 20006-1004
UNITED STATES

TITLE

BATTERY MODULE WITH IMPROVED STRUCTURE, BATTERY CONTACT AND HEAT DISSIPATION

FILING FEE RECEIVED		
1000	FEES: Authority has been given in Paper No._____ to charge/credit DEPOSIT ACCOUNT No._____ for following:	☐ All Fees ☐ 1.16 Fees (Filing) ☐ 1.17 Fees (Processing Ext. of time) ☐ 1.18 Fees (Issue) ☐ Other _____ ☐ Credit

UNITED STATES PATENT AND TRADEMARK OFFICE

Commissioner for Patents
United States Patent and Trademark Office
P.O. Box 1450
Alexandria, VA 22313-1450
www.uspto.gov

ROBERT E. BUSHNELL & LAW FIRM
2029 K STREET NW
SUITE 600
WASHINGTON DC 20006-1004

COPY MAILED
MAR 08 2010

In re Application of	:	
Yoon-Cheol Jeon, et al.	:	
Application No. 11/798,028	:	DECISION GRANTING PETITION
Filed: May 9, 2007	:	UNDER 37 CFR 1.313(c)(2)
Attorney Docket No. P58200	:	

This is a decision on the petition under 37 CFR 1.313(c)(2), filed, March 5, 2010 to withdraw the above-identified application from issue after payment of the issue fee.

The petition is **GRANTED**.

The above-identified application is withdrawn from issue for consideration of a submission under 37 CFR 1.114 (request for continued examination). *See* 37 CFR 1.313(c)(2).

Petitioner is advised that the issue fee paid on January 26, 2010 cannot be refunded. If, however, this application is again allowed, petitioner may request that it be applied towards the issue fee required by the new Notice of Allowance.[1]

Telephone inquiries should be directed to Terri Johnson at (571) 272-2991.

This application is being referred to Technology Center AU 2858 for processing of the request for continued examination under 37 CFR 1.114 and for consideration of the concurrently filed information disclosure statement.

Terri Johnson
Petitions Examiner
Office of Petitions

---

[1] *The request to apply the issue fee to the new Notice may be satisfied by completing and returning the new Part B – Fee(s) Transmittal Form (along with any balance due at the time of submission). Petitioner is advised that the Issue Fee Transmittal Form must be completed and timely submitted to avoid abandonment of the application.*

UNITED STATES PATENT AND TRADEMARK OFFICE

Commissioner for Patents
United States Patent and Trademark Office
P.O. Box 1450
Alexandria, VA 22313-1450
www.uspto.gov

SUGHRUE MION, PLLC
2100 PENNSYLVANIA AVENUE, N.W.
SUITE 800
WASHINGTON DC 20037

COPY MAILED
JUL 21 2008

In re Application of

Tanaka, et al.

Application No. 11/798,066

Filed: May 10, 2007

Attorney Docket No. Q99746

DECISION ON PETITION

This is a decision on the petition to withdraw the holding of abandonment under 37 CFR 1.181(a), filed March 25, 2008.

The petition is **granted**.

This application was held abandoned on August 16, 2007, after no reply was received to the Notice to File Missing Parts of Non-Provisional Application mailed June 15, 2007. The notice set forth a shortened period for reply of two months from its mailing date. No response was received within the allowable period, and the application became abandoned on August 16, 2007. A Notice of Abandonment was mailed February 28, 2008. The instant petition was filed on February 27, 2008. Petitioner maintains that the Notice to File Missing Parts of Non-Provisional Application was never received and provides a copy of the relevant docketing calendar as proof of the same.

Section 711.03(c)(II) of the *Manual of Patent Examining Procedure* ("MPEP") provides that in order to establish non-receipt of an Office action so as prove that the imposition of a holding of abandonment is improper, petitioner must: 1) provide a statement to the Office indicating that the Office action was not received by petitioner; 2) include in the statement an attestation to the fact that a review of the file jacket and docket records maintained by petitioner indicates that the Office action was not received; and 3) provide a copy of the docket record where the non-received Office communication would have been entered had it been received and docketed.

Petitioner has met the burden of proof as established by Section 711.03(c)(II) of the MPEP. The holding of abandonment is, therefore, withdrawn.

The application file is being forwarded the Office of Patent Application Processing for further processing including resetting of the period for reply to the Notice to File Missing Parts of Non-Provisional Application.

Questions concerning this decision should be directed to the undersigned at (571) 272-3222.

Kenya A. McLaughlin
Petitions Attorney
Office of Petitions

UNITED STATES PATENT AND TRADEMARK OFFICE

Commissioner for Patents
United States Patent and Trademark Office
P.O. Box 1450
Alexandria, VA 22313-1450
www.uspto.gov

RADER FISHMAN & GRAUER, PLLC
LION BUILDING
1233 20TH STREET N.W., SUITE 501
WASHINGTON, DC 20036

MAILED

SEP 30 2009

OFFICE OF PETITIONS

In re Application of
Kouji Matsuura, et. al.
Application No. 11/798,098
Filed: May 10, 2007
Attorney Docket No. SON-3757

ON PETITION

This is a decision on the petition under 37 CFR 1.181 (no fee) filed on November 5, 2008, requesting to withdraw the holding of abandonment, or in the alternative, a petition under 37 CFR 1.137(b) to revive the above-identified application.

The application was held abandoned for failure to timely respond to the Notice of Allowance and Fee(s) Due mailed June 26, 2008. A Notice of Abandonment was mailed on October 21, 2008.

The petition under 37 CFR 1.181 is **DISMISSED**.

Petitioner argues that "a review of the Part B-fee(s) Transmittal of August 18, 2008 at item 4b. reveals that "*The Director is hereby authorized to charge the required fees(s), or any deficiency, or credit any over payment to Deposit Account* _____." Petitioner further argues that "checking the box next to this phrase, along with a Deposit Account number already being of record, could be construed as constituting an authorization to charge the issue fee. The omission of the Deposit Account Number was a clerical error that was inadvertent and without deceptive intent."

A review of the record reveals that an amendment after allowance was filed on July 28, 2008, which contained an authorization to charge "any required relief including extensions of time and authorizes the Commissioner to charge the cost of such petitions and/or other fees due in connection with the filing of this document" to the deposit account listed. The amendment further states that "Applicant believes no fee is due with this response. However, if a fee is due, please charge our Deposit Account."

Petitioner should note that the authorization contained in the amendment filed on July 28, 2008 was specific to "this document" and/or "this response" meaning the amendment filed on July 28, 2008 and not payment of any post allowance fees. Therefore, the amendment failed to contain a general authorization to charge all fees necessary to keep the above application from becoming abandoned.

The petition under 37 CFR 1.137(b) is **GRANTED**.

The petition satisfies the requirements of 37 CFR 1.137(b) in that petitioner has supplied (1) the reply in the form of $1,510 for payment of the issue fee and $300 for payment of the publication fee; (2) the petition fee of $1,620; and (3) a proper statement of unintentional delay.

This application file is being referred to the Office of Data Management to be processed into a patent.

Telephone inquiries concerning this decision should be directed to the undersigned at (571) 272-3226.

Andrea Smith
Petitions Examiner
Office of Petitions

UNITED STATES PATENT AND TRADEMARK OFFICE

UNITED STATES DEPARTMENT OF COMMERCE
United States Patent and Trademark Office
Address: COMMISSIONER FOR PATENTS
P.O. Box 1450
Alexandria, Virginia 22313-1450
www.uspto.gov

APPLICATION NO.	FILING DATE	FIRST NAMED INVENTOR	ATTORNEY DOCKET NO.	CONFIRMATION NO.
11/798,147	05/10/2007	Jwh Lee	P05628	2963

40401 7590 07/08/2010
Hershkovitz & Associates, LLC
2845 Duke Street
Alexandria, VA 22314

EXAMINER
GEISEL, KARA E

ART UNIT	PAPER NUMBER
2877	

NOTIFICATION DATE	DELIVERY MODE
07/08/2010	ELECTRONIC

Please find below and/or attached an Office communication concerning this application or proceeding.

The time period for reply, if any, is set in the attached communication.

Notice of the Office communication was sent electronically on above-indicated "Notification Date" to the following e-mail address(es):

USPTO@hershkovitz.net
patent@hershkovitz.net

UNITED STATES PATENT AND TRADEMARK OFFICE

Commissioner for Patents
United States Patent and Trademark Office
P.O. Box 1450
Alexandria, VA 22313-1450
www.uspto.gov

Paper No. 20100706

Hershkovitz & Associates, LLC
2845 Duke Street
Alexandria VA 22314

In re Application of: LEE et al. Serial No.: 11/798,147 Filed: May 10, 2007 Attorney Docket No.: P05628	: : : : :	PETITION TO ACCEPT COLOR DRAWINGS UNDER 37 CFR § 1.84(a)(2)

This is a decision on the petition filed May 10, 2007 to accept color drawings under 37 CFR § 1.84(a)(2).

The petition is granted and the drawings have been accepted.

Gregory J. Toatley, Jr.
Supervisory Patent Examiner,
Art Unit 2877

UNITED STATES PATENT AND TRADEMARK OFFICE

Commissioner for Patents
United States Patent and Trademark Office
P.O. Box 1450
Alexandria, VA 22313-1450
www.uspto.gov

McDERMOTT WILL & EMERY, LLP
600 13TH Street, N.W.
Washington, DC 20005-3096

JUL 1 2008

In re Application of	: DECISION ON REQUEST TO
Atsushi OMOTE	: PARTICIPATE IN PATENT
Application No. 11/798217	: PROSECUTION HIGHWAY
Filed: May 11, 2007	: PILOT PROGRAM AND PETITION
Attorney Docket No. 063979-0085	: TO MAKE SPECIAL UNDER
	: 37 CFR 1.102(d)

This is a decision on the request to participate in the Patent Prosecution Highway (PPH) program and the petition under 37 CFR 1.102(d), filed June 23, 2008, to make the above-identified application special.

The request and petition are **GRANTED**.

A grantable request to participate in the PPH pilot program and petition to make special require:

(1) The U.S. application must validly claim priority under 35 U.S.C. 119(a) to one or more applications filed in the JPO, note where the JPO application with similar claims is not the same application from which the U.S. application claims priority that the applicant must identify the relationship between the JPO application with similar claims and the JPO priority application;
(2) Applicant must submit a copy of:
- a. The allowable/patentable claim(s) from the JPO application(s) or if a copy of the allowable/patentable claims is available via the Dossier Access System (DAS) applicant may request the USPTO to obtain a copy from DAS; however, if the USPTO is unable to obtain a copy from the DAS, the applicant will be required to submit a copy;
- b. An English translation of the allowable/patentable claim(s), if applicable; and
- c. A statement that the English translation is accurate, if applicable;

(3) Applicant must:
- a. Ensure all the claims in the U.S. application must sufficiently correspond or be amended to sufficiently correspond to the allowable/patentable claim(s) in the JPO application(s); and
- b. Submit a claims correspondence table in English

(4) Examination of the U.S. application has not begun;
(5) Applicant must submit:
- a. Documentation of prior office action:
  - i. a copy of the office action(s) just prior to the "Decision to Grant a Patent" from each of the JPO application(s) containing the allowable/patentable claims(s)

or

ii. if the allowable/patentable claims(s) are from "Notification of Reasons for Refusal" then the Notification of Reasons for Refusal or

iii. if the JPO application is a first action allowance then no office action from the JPO is necessary should be indicated on the request/petition form;

Further, if a copy of the documents from a or b above is available via the Dossier Access System (DAS) (http://dossier1.ipdl.inpit.go.jp/AIPN/odse_top_fwi.ipdl?N0000=7401), applicant may request the USPTO obtain a copy from the SAD; however, if the USPTO is unable to obtain a copy of the DAS, the applicant will be required to submit a copy;

b. An English language translation of the JPO Office action from (5) (a)(i)-(ii) above, if applicable; and

c. A statement that the English translation is accurate;

(6) Applicant must submit:

a. An IDS listing the documents cited by the JPO examiner in the JPO office action (unless already submitted in this application)

b. Copies of documents except U.S. patents or U.S. patent application publications (unless already submitted in this application); and

(7) The required petition fee under 37 CFR 1.17(h).

The request to participate in the PPH pilot program and petition comply with the above requirements. Accordingly, the above-identified application has been accorded "special" status.

Telephone inquiries concerning this decision should be directed to Kathryn Gorgos at 571 272-1012.

All other inquiries concerning the examination or status of the application is accessible in the PAIR system at http://www.uspto.gov/ebc/index.html.

The application is being forwarded to the examiner for action on the merits commensurate with this decision.

Kathryn Gorgos
TQAS TC 1700

UNITED STATES PATENT AND TRADEMARK OFFICE

UNITED STATES DEPARTMENT OF COMMERCE
United States Patent and Trademark Office
Address: COMMISSIONER FOR PATENTS
P.O. Box 1450
Alexandria, Virginia 22313-1450
www.uspto.gov

APPLICATION NO.	FILING DATE	FIRST NAMED INVENTOR	ATTORNEY DOCKET NO.	CONFIRMATION NO.
11/798,220	05/11/2007	Naoyuki Okita	071303	4602

7590 07/16/2009
WESTERMAN, HATTORI, DANIELS & ADRIAN, LLP
1250 CONNECTICUT AVENUE, NW
SUITE 700
WASHINGTON, DC 20036

EXAMINER
BARRON JR, GILBERTO

ART UNIT	PAPER NUMBER
2432	

MAIL DATE	DELIVERY MODE
07/16/2009	PAPER

DECISION GRANTING PETITION UNDER 37 CFR 1.138(d)

The declaration of express abandonment is recognized

This is in response to the petition under 37 CFR 1.138(d), requesting for a refund of any previously paid search fee and excess claims fee in the above-identified application.

The petition is granted.

The express abandonment is recognized. Any previously paid search fee and excess claims fee are hereby refunded.

Telephone inquiries should be directed to the Office of Data Management at (571) 272-4200.

Patent Publication Branch
Office of Data Management

Deposit Acct: 07/16/2009 BPOWELL 0010070100
DAN:502566 Name/Number:11798220
FC: 9204 $860.00 CR

Adjustment date: 07/16/2009 BPOWELL
05/14/2007 DEMMANU1 00000039 11798220
02 FC:1111 -500.00 OP
04 FC:1203 -360.00 OP

FORM PET651G (Rev. 08/07)

UNITED STATES PATENT AND TRADEMARK OFFICE

Commissioner for Patents
United States Patent and Trademark Office
P.O. Box 1450
Alexandria, VA 22313-1450
www.uspto.gov

NOV 19 2009

INTELLECTUAL PROPERTY DEPT.
DEWITT ROSS & STEVENS S.C.
2 EAST MIFFLIN STREET
SUITE 600
MADISON, WI 53703-2865

In re Application of FAUCHER et al. Application No. 11/798,233 Filed: May 11, 2007 For: OVERHEAD TRACK ANCHOR SYSTEM	: : : : :	**ON PETITION TO REVIEW RESTRICTION REQUIREMENT UNDER 37 CFR 1.144**

This is a decision on Applicant's Petition under 37 CFR 1.144 filed on July 23, 2009 to review the Examiner's requirement for restriction and election of species made in the Office action mailed on May 28, 2008 and Applicant's request that the restriction and election of species requirement be withdrawn.

The Petition is **GRANTED-IN-PART.**

A review of the record indicates that the examiner required a restriction between Invention I (claims 1-2, 16-17 and 43 drawn to a head component), Invention II (claims 3-5, 18-26 and 44 drawn to an anchor assembly) and Invention III (Claims 6-15 and 27-42 drawn to a combination kit); and required an election of species between Species 1 (shown in Figure2), Species 2 (shown in Figure 18), Species 3 (shown in Figure 19), Species 4 (shown in Figure 23), Species 5 (shown in Figure 24), Species 6 (shown in Figure 25), Species 7 (shown in Figure 28), Species 8 (shown in Figure 32), Species 9 (shown in Figure 33), Species 10 (shown in Figure 34) and Species 11 (shown in Figure 35) in the office action mailed on May, 28 2008. On November 25, 2008, applicant provisionally elected with traverse to prosecute Invention 1 (claims 1-2, 16-17 and 43) and Species 1 (Figure 2); and requested reconsideration of both restriction requirements. In the office action mailed on February 17, 2009, the examiner made the restriction requirements final and withdrew claims 3-15, 18-42 and 44 as being drawn to a nonelected invention.

Applicant contends that the restriction requirement between Inventions I and II/III based on the inventions being related as combination and subcombination is improper, unless it can be shown that the combination claims do not require the particulars of the subcombination as claimed for patentability. A review of the claims

indicates that all the claims directed to Inventions II and III (the combination) include all the elements of the subcombination claims of Invention I. Specifically, claim 3 of Invention II recites substantially the same subject matter as claim 1 of Invention I; it also recites a "hanger component (shank)" used to hang the head component. Therefore, the combination claims (Invention II and III) do require the particulars of the subcombination claims (Invention I) for patentability, thus the requirement for restriction is improper.

Applicant further contends that the examiner's election of species requirement between the species set forth above was improper because these figures are not in fact separate species, but merely showing different views of the invention in operation in multiple figures. A review of the Figures indicates that Figure 18, 19, and 33-35 are in fact different views of the invention of the species shown in Figure 2. However, Figures 23-25, 28 and 32 clearly show different species and subspecies that are both independent and distinct. Additionally, the examiner would have a serious burden searching and determining patentability for each of these independent and distinct species, thus a requirement for election of species in this case would be proper.

In view of the findings noted above, the restriction requirement with regards to claims 1-44 is vacated and the above-noted withdrawn claims are reinstated. However, the application will be returned to the examiner to reopen prosecution for consideration of a new election of species requirement.

SUMMARY: The Petition is **GRANTED-IN-PART.**

Any questions regarding this decision should be directed to J. Allen Shriver at (571) 272-6698.

Kathy Matecki

Kathy Matecki, Director
Technology Center 3600
(571) 272-5250

KM/jas : 10/19/2009

UNITED STATES PATENT AND TRADEMARK OFFICE

Commissioner for Patents
United States Patent and Trademark Office
P.O. Box 1450
Alexandria, VA 22313-1450
www.uspto.gov

OLIFF & BERRIDGE, PLC
P.O. BOX 320850
ALEXANDRIA, VA 22320-4850

COPY MAILED
JAN 16 2009

In re Application of :
Michael Binnard :
Application No. 11/798,262 : ON PETITION
Filed: May 11, 2007 :
Attorney Docket No. 123691.04

This is a decision on the petition, filed January 16, 2009 under 37 CFR 1.313(c)(2) to withdraw the above-identified application from issue after payment of the issue fee.

The petition is **GRANTED**.

The above-identified application is withdrawn from issue for consideration of a submission under 37 CFR 1.114 (request for continued examination). See 37 CFR 1.313(c)(2).

Petitioner is advised that the issue fee paid on December 29, 2008 in the above-identified application cannot be refunded. If, however, the above-identified application is again allowed, petitioner may request that it be applied towards the issue fee required by the new Notice of Allowance.[1]

Telephone inquiries should be directed to Irvin Dingle at (571) 272-3210.

This matter is being referred to Technology Center AU 2851 for processing of the request for continued examination under 37 CFR 1.114 and for consideration of the concurrently filed Information Disclosure Statement.

/Irvin Dingle/
Irvin Dingle
Petitions Examiner
Office of Petitions

---

[1] The request to apply the issue fee to the new Notice may be satisfied by completing and returning the new Issue Fee Transmittal Form PTOL-85(b), which includes the following language thereon: Commissioner for Patents is requested to apply the Issue Fee and Publication Fee (if any) or re-apply any previously paid issue fee to the application identified above. Petitioner is advised that, whether a fee is indicated as being due or not, the Issue Fee Transmittal Form **must** be completed and timely submitted to avoid abandonment. Note the language in bold text on the first page of the Notice of Allowance and Fee(s) Due (PTOL-85).

UNITED STATES PATENT AND TRADEMARK OFFICE

Commissioner for Patents
United States Patent and Trademark Office
P.O. Box 1450
Alexandria, VA 22313-1450
www.uspto.gov

CHANT SINCERE CO., LTD.,
P.O. BOX 108-00403
TAIPEI 106 TW TAIWAN

COPY MAILED

SEP 04 2009

OFFICE OF PETITIONS

In re Application of	:	
Chen et al.	:	
Application No.: 11/798269	:	DECISION ON
Filing or 371(c) Date: 05/11/2007	:	PETITION
Title of Invention:	:	
CONNECTOR WITH A HEAT SINK	:	

This is a decision on the "Petition for Revival of an Applicant for Patent Abandoned Unintentionally Under 37 CFR 1.137(b)." filed April 23, 2009. Petitioner requests withdrawal of the holding of abandonment for failure to receive an Office action mailed November 10, 2008. The petition is properly treated under 37 CFR 1.181(a).

This Petition is hereby **dismissed**.

Any further petition must be submitted within TWO (2) MONTHS from the mail date of this decision. Extensions of time under 37 CFR 1.136(a) are permitted. The reconsideration request should include a cover letter entitled "Renewed Petition under [insert the applicable code section]." This is **not** final agency action within the meaning of 5 U.S.C. § 704.

Background

The above-identified application became abandoned for failure to timely and properly reply to the Notice of Allowance and Issue Fee Due, and Notice of Allowability, mailed November 26, 2008. The Notices set a non-extendable three (3) month period for reply.

A reply in the form of the issue and publication fees was filed on February 24, 2009; however, the Notice of Allowability required corrected drawings. No complete and proper reply having been received, the application became abandoned on February 27, 2009. A Notice of Abandonment was mailed March 24, 2009.

It is also noted that a Revocation of Power of Attorney and Change of Correspondence Address were filed on February 24, 2009, directing all correspondence to Petitioner herein.

Petition under 37 CFR 1.181

Applicant files the present petition and corrected drawings in response to the Notice of Allowability, and requests withdrawal of the holding of abandonment. Petitioner/Applicant notes the present correspondence address, and provides that Applicant prefers using the above-identified correspondence in connection with foreign filed applications. Applicant asserts that the patent law firm maintains a log book record on all correspondence received on a daily basis, a copy of which for the date of January 10, 2009, is putatively enclosed. Applicant asserts that there was no correspondence received in connection with the above-identified application between November 10, 2008 (from the mailing date of the Office action from the USPTO) and January 10, 2009.

Applicable Law, Rules and MPEP

The MPEP 711.03(c)A, Petition To Withdraw Holding of Abandonment Based on Failure To Receive Office Action, provides

> In Delgar v. Schulyer, 172 USPQ 513 (D.D.C. 1971), the court decided that the Office should mail a new Notice of Allowance in view of the evidence presented in support of the contention that the applicant's representative did not receive the original Notice of Allowance. Under the reasoning of Delgar, an allegation that an Office action was never received may be considered in a petition to withdraw the holding of abandonment. If adequately supported, the Office may grant the petition to withdraw the holding of abandonment and remail the Office action. That is, the reasoning of Delgar is applicable regardless of whether an application is held abandoned for failure to timely pay the issue fee (35 U.S.C. 151) or for failure to prosecute (35 U.S.C. 133). To minimize costs and burdens to practitioners and the Office, the Office has modified the showing required to establish nonreceipt of an Office action. The showing required to establish nonreceipt of an Office communication must include a statement from the practitioner stating that the Office communication was not received by the practitioner and attesting to the fact that a search of the file jacket and docket records indicates that the Office communication was not received. A copy of the docket record where the nonreceived Office communication would have been entered had it been received and docketed must be attached to and referenced in practitioner's statement. For example, if a three month period for reply was set in the nonreceived Office action, a copy of the docket report showing all replies docketed for a date three months from the mail date of the nonreceived Office action must be submitted as documentary proof of nonreceipt of the Office action. The showing outlined above may not be sufficient if there are circumstances that point to a conclusion that the Office action may have been lost after receipt rather than a conclusion that the Office action was lost in the mail (e.g., if the practitioner has a history of not receiving Office actions). (Emphasis supplied)

MPEP 711.03(c)

Analysis

A review of Office records reveals that the Notice of Allowance and Issue Fee Due, and Notice of Allowability, mailed November 26, 2008, were mailed to a correspondence address of record. Office records also reveal that a reply to the Notices, in the form of the issue and publication fees, were received in this Office on Februuary 24, 2009, along with the Revocation of Power of Attorney and Change of Correspondence Address were filed on February 24, 2009, directing all correspondence to Petitioner herein.

Moreover, Petitioner refers to an Office action mailed November 10, 2008; however, Office records for the present application fail to show an Office action mailed in the present application on November 10, 2008.

In view of the above, it is apparent that the Notice of Allowance and Issue Fee Due, and Notice of Allowability, mailed November 26, 2008, were received at the correspondence address of record.

It is also apparent that corrected drawings in response to the Notice of Allowability were not filed until the filing of the present petition.

Accordingly, the petition to withdraw the holding of abandonment is dismissed.

Alternate venue

Applicant is strongly urged to file a petition stating that the delay was unintentional. Public Law 97-247, § 3, 96 Stat. 317 (1982), which revised patent and trademark fees, amended 35 U.S.C. § 41(a)(7) to provide for the revival of an "unintentionally" abandoned application without a showing that the delay in was "unavoidable." An "unintentional" petition under 37 CFR 1.137(b) **must be accompanied by the required fee**.

The filing of a petition under 37 CFR 1.137(b) cannot be intentionally delayed and therefore must be filed promptly. A person seeking revival due to unintentional delay can not make a statement that the delay was unintentional unless the entire delay, including the delay from the date it was discovered that the application was abandoned until the filing of the petition to revive under 37 CFR 1.137(b), was unintentional. A statement that the delay was unintentional is not appropriate if petitioner intentionally delayed the filing of a petition for revive under 37 CFR 1.137(b).

Further correspondence with respect to this matter should be addressed as follows:

By mail: Director for Patents
PO Box 1450
Alexandria, VA 22313-1450

By FAX: (571) 273-8300
Attn: Office of Petitions

By hand: Customer Service Window
Randolph Building
401 Dulany Street
Alexandria, VA 22314

Telephone inquiries concerning this petition Decision should be directed to the undersigned at (571) 272-3232.

/Derek L. Woods/
Derek L. Woods
Attorney
Office of Petitions

UNITED STATES PATENT AND TRADEMARK OFFICE

Commissioner for Patents
United States Patent and Trademark Office
P.O. Box 1450
Alexandria, VA 22313-1450
www.uspto.gov

Muncy, Geissler, Olds & Lowe, PLLC
P.O. BOX 1364
FAIRFAX VA 22038-1364

COPY MAILED

JAN 14 2010

In re Application of	:	
Chen et al.	:	
Application No.: 11/798269	:	DECISION ON
Filing or 371(c) Date: 05/11/2007	:	PETITION
Title of Invention:	:	
CONNECTOR WITH A HEAT SINK	:	

This is a decision on the "Petition for Revival of an Applicant for Patent Abandoned Unintentionally Under 37 CFR 1.137(b)." filed November 3, 2009.

This Petition is hereby **granted**.

The above-identified application became abandoned for failure to timely and properly reply to the Notice of Allowance and Issue Fee Due, and Notice of Allowability, mailed November 26, 2008. The Notices set a non-extendable three (3) month period for reply. No reply having been received, the application became abandoned on July 12, 2007. A Notice of Abandonment was mailed November 2, 2007.

The petition satisfies the conditions for revival pursuant to the provisions of 37 CFR 1.137(b) in that the petition includes (1) the reply; (2) the petition fee; and (3) the required statement of unintentional delay. Accordingly, the reply is accepted as having been unintentionally delayed.

THE power of Attorney has been entered and made of record.

This application is being referred to the Office of Data Management for processing into a patent.

Telephone inquiries concerning this decision should be directed to the undersigned at (571) 272-3232.

/Derek L. Woods/
Derek L. Woods
Attorney
Office of Petitions

UNITED STATES PATENT AND TRADEMARK OFFICE

UNITED STATES DEPARTMENT OF COMMERCE
United States Patent and Trademark Office
Address: COMMISSIONER FOR PATENTS
P.O. Box 1450
Alexandria, Virginia 22313-1450
www.uspto.gov

Juan Carlos A. Marquez
c/o Stites & Harbison PLLC
1199 North Fairfax Street
Suite 900
Alexandria, VA 22314-1437

Mail Date: 04/21/2010

Applicant	: Hiroaki Iwato	: DECISION ON REQUEST FOR
Patent Number	: 7639334	: RECALCULATION of PATENT
Issue Date	: 12/29/2009	: TERM ADJUSTMENT IN VIEW
Appliction No	: 11/798,278	: OF WYETH AND NOTICE OF INTENT TO
Filed	: 05/11/2007	: ISSUE CERTIFICATE OF CORRECTION
		:

The Request for Recalculation is **GRANTED** to the extent indicated.

The patent term adjustment has been determined to be **270** days. The USPTO will *sua sponte* issue a certificate of correction reflecting the amount of PTA days determined by the recalculation.

Prior to the issuance of the certificate of correction, the USPTO will afford patentee an opportunity to be heard and request reconsideration. Accordingly, patentee has **one month or thirty (30) days**, whichever is longer, to file a request for reconsideration of this patent term adjustment calculation. See 35 U.S.C. 154(b)(3)(B)(ii) and 37 CFR 1.322(a)(4). No extensions of time will be granted under 37 CFR 1.136.

Patentee should use document code PET.OP if electronically filing a request for reconsideration of this patent term adjustment calculation. The patentee must also include the information required by 37 CFR 1.705(b)(2) and the fee required by 37 CFR 1.18(e). If patentee does not file a timely request for reconsideration of this patent term adjustment calculation including the information required by 37 CFR 1.705(b)(2) and the fee required by 37 CFR 1.18(e), the USPTO will issue a certificate of correction reflecting the PTA determination noted above.

Patentee should be aware that in order to preserve the right to review in the United States District Court for the District of Columbia of the USPTO patent term adjustment determination, patentee must ensure that he or she also take the steps required under 35 U.S.C. 154(b)(4)(A) in a timely manner. Nothing in the request for recalculation should be construed as providing an alternative time frame for commencing a civil action under 35 U.S.C. 154(b)(4)(A).

Any questions concerning this decision should be directed to the Office of Patent Legal Administration at 571-272-7702.

UNITED STATES PATENT AND TRADEMARK OFFICE

Commissioner for Patents
United States Patent and Trademark Office
P.O. Box 1450
Alexandria, VA 22313-1450
www.uspto.gov

JONES, TULLAR & COOPER, P.C.
P.O. BOX 2266 EADS STATION
ARLINGTON, VA 22202

COPY MAILED

DEC 17 2009

OFFICE OF PETITIONS

In re Application of
Da Keng
Application No. 11/798,330
Filed: May 11, 2007
Attorney Docket No. 2460.460NP

ON PETITION

This is a decision on the petition under 37 CFR 1.137(b), filed October 19, 2009, to revive the above-identified application.

The application became abandoned for failure to file a response to the final Office action mailed on February 26, 2009. A Notice of Abandonment was mailed September 10, 2009.

The instant petition is not signed by an attorney of record. However, in accordance with 37 CFR 1.34(a), the signature of J. Andrew McKinney, Jr. appearing on the petition shall constitute a representation to the United States Patent and Trademark Office that he is authorized to represent the particular party on whose behalf he acts. If Mr. McKinney desires to receive future correspondence regarding this application, the appropriate power of attorney or authorization of agent must be submitted. A courtesy copy of this decision is being mailed to petitioner. Nevertheless, all future correspondence regarding this application file will be directed solely to the address of record until otherwise instructed.

The petition satisfies the requirements of 37 CFR 1.137(b) in that petitioner has supplied (1) the reply in the form of a Request for Continued Examination (RCE) along with the $405 fee and the submission under 37 CFR 1.114; (2) the petition fee of $810; and (3) a proper statement of unintentional delay. Therefore, the petition is **GRANTED**.

This application file is being referred to Technology Center Art Unit 3641 for processing of the RCE and for appropriate action by the Examiner in the normal course of business on the amendment submitted in accordance with 37 CFR 1.114.

Telephone inquiries concerning this decision should be directed to the undersigned at (571) 272-3226.

Andrea Smith
Petitions Examiner
Office of Petitions

cc: J. Andrew McKinney, Jr.
P.O. Box 1290
Millersville, MD 21108

UNITED STATES PATENT AND TRADEMARK OFFICE

Commissioner for Patents
United States Patent and Trademark Office
P.O. Box 1450
Alexandria, VA 22313-1450
www.uspto.gov

Attn: Ms. Maquita Wong
The Hong Kong Polytechnic University
1800 Diagonal Road, Suite 600
Mailbox #119
Alexandria, VA 22314

COPY MAILED

SEP 2 4 2008

OFFICE OF PETITIONS

In re Application of	:	
Hang-yin Ling et al.	:	
Application No. 11/798,343	:	DECISION ON PETITION
Filed: May 14, 2007	:	TO WITHDRAW
Attorney Docket No. IP-377A	:	FROM RECORD
	:	

This is a decision on the Request to Withdraw as attorney or agent under 37 C.F.R. § 1.36(b) or 37 C.F.R. § 10.40 filed August 21, 2008.

The request is **APPROVED**.

A grantable request to withdraw as attorney/agent of record must be signed by every attorney/agent seeking to withdraw or contain a clear indication that one attorney is signing on behalf of another/others. The Office requires the practitioner(s) requesting withdrawal to certify that he, she, or they have: (1) given reasonable notice to the client, prior to the expiration of the response period, that the practitioner(s) intends to withdraw from employment; (2) delivered to the client or a duly authorized representative of the client all papers and property (including funds) to which the client is entitled; and (3) notified the client of any responses that may be due and the time frame within which the client must respond, pursuant 37 CFR 10.40(c).

The request was signed by Robert M. DeWitty, sole attorney of record. Robert M. DeWitty has been withdrawn as attorney of record.

Applicant is reminded that there is no attorney of record at this time.

The correspondence address has been to that of the inventor at the address of record. The address changed is copied below.

Telephone inquiries concerning this decision should be directed to Kimberly Inabinet at 571-272-4618.

Kimberly Inabinet
Petitions Examiner
Office of Petitions

cc: Hang-yin Ling
The Hong Kong Polytechnic University,
Hunghom, Kowloon, Hong Kong

UNITED STATES PATENT AND TRADEMARK OFFICE

UNITED STATES DEPARTMENT OF COMMERCE
United States Patent and Trademark Office
Address: COMMISSIONER FOR PATENTS
P.O. Box 1450
Alexandria, Virginia 22313-1450
www.uspto.gov

APPLICATION NUMBER	FILING OR 371(C) DATE	FIRST NAMED APPLICANT	ATTY. DOCKET NO./TITLE
11/798,343	05/14/2007	Hang-yin Ling	IP-377A

CONFIRMATION NO. 5286

POWER OF ATTORNEY NOTICE

OC000000032235162

ATTN: Maquite Wong
The Hong Kong Polytechnic University
1800 Diagonal Road, Suite 600
Mailbox #119
Alexandria, VA 22314

Date Mailed: 09/23/2008

NOTICE REGARDING CHANGE OF POWER OF ATTORNEY

This is in response to the Power of Attorney filed 08/21/2008.

- The withdrawal as attorney in this application has been accepted. Future correspondence will be mailed to the new address of record. 37 CFR 1.33.

/kainabinet/

Office of Data Management, Application Assistance Unit (571) 272-4000, or (571) 272-4200, or 1-888-786-0101

UNITED STATES PATENT AND TRADEMARK OFFICE

UNITED STATES DEPARTMENT OF COMMERCE
United States Patent and Trademark Office
Address: COMMISSIONER FOR PATENTS
P.O. Box 1450
Alexandria, Virginia 22313-1450
www.uspto.gov

HOWREY LLP-EU
C/O IP DOCKETING DEPARTMENT
2941 FAIRVIEW PARK DR., SUITE 200
FALLS CHURCH, VA 22042

Mail Date: 04/21/2010

Applicant	: Karel Van Den Berg	: DECISION ON REQUEST FOR
Patent Number	: 7578259	: RECALCULATION of PATENT
Issue Date	: 08/25/2009	: TERM ADJUSTMENT IN VIEW
Appliction No	: 11/798,405	: OF WYETH AND NOTICE OF INTENT TO
Filed	: 05/14/2007	: ISSUE CERTIFICATE OF CORRECTION
		:

The Request for Recalculation is **GRANTED** to the extent indicated.

The patent term adjustment has been determined to be **0** days. The USPTO will *sua sponte* issue a certificate of correction reflecting the amount of PTA days determined by the recalculation.

Prior to the issuance of the certificate of correction, the USPTO will afford patentee an opportunity to be heard and request reconsideration. Accordingly, patentee has **one month or thirty (30) days**, whichever is longer, to file a request for reconsideration of this patent term adjustment calculation. See 35 U.S.C. 154(b)(3)(B)(ii) and 37 CFR 1.322(a)(4). No extensions of time will be granted under 37 CFR 1.136.

Patentee should use document code PET.OP if electronically filing a request for reconsideration of this patent term adjustment calculation. The patentee must also include the information required by 37 CFR 1.705(b)(2) and the fee required by 37 CFR 1.18(e). If patentee does not file a timely request for reconsideration of this patent term adjustment calculation including the information required by 37 CFR 1.705(b)(2) and the fee required by 37 CFR 1.18(e), the USPTO will issue a certificate of correction reflecting the PTA determination noted above.

Patentee should be aware that in order to preserve the right to review in the United States District Court for the District of Columbia of the USPTO patent term adjustment determination, patentee must ensure that he or she also take the steps required under 35 U.S.C. 154(b)(4)(A) in a timely manner. Nothing in the request for recalculation should be construed as providing an alternative time frame for commencing a civil action under 35 U.S.C. 154(b)(4)(A).

Any questions concerning this decision should be directed to the Office of Patent Legal Administration at 571-272-7702.

UNITED STATES PATENT AND TRADEMARK OFFICE

Commissioner for Patents
United States Patent and Trademark Office
P.O. Box 1450
Alexandria, VA 22313-1450
www.uspto.gov

DICKINSON WRIGHT PLLC
1875 EYE STREET, NW
SUITE 1200
WASHINGTON DC 20006

MAILED

MAR 3 1 2010

OFFICE OF PETITIONS

In re Application of	:	
Andrieux et al.	:	DECISION ON PETITION
Application No. 11/798,455	:	TO WITHDRAW
Filed: May 14, 2007	:	FROM RECORD
Attorney Docket No. 40538Y	:	

This is a decision on the Request to Withdraw as attorney or agent of record under 37 C.F.R. § 1.36(b) filed January 28, 2010, which is being treated as a request to withdraw from employment in a proceeding before the Office under 37 C.F.R. § 10.40.

The request is **DISMISSED**.

A review of the file record indicates that The Nath Law Group does not have power of attorney in this patent application. Accordingly, the request to withdraw under 37 C.F.R. § 1.36(b) is not applicable.

The request to change the correspondence address of record is not accepted in view of The Nath Law Group not having power of attorney. See MPEP §§ 601.03 and 405.

A review of USPTO records reveals that the List Of Practitioners To Be Recognized By The Office As Being Of Record, filed May 14, 2007 by William E. Beaumont, was erroneously accepted as a power of attorney. Accordingly, in view of these facts the power of attorney must revert to the original power of attorney appointed in the Oath/Declaration filed October 8, 2008.

Accordingly, all future communications from the Office will be directed solely to the above current address of record until proper instructions have been received.

Currently, there is an outstanding Office action mailed December 17, 2009 that requires a reply.

Telephone inquires concerning this decision should be directed to the undersigned at 571-272-7751.

Joan Olszewski

Joan Olszewski
Petitions Examiner
Office of Petitions

cc: The Nath Law Group
112 South West Street
Alexandria, VA 22314

UNITED STATES PATENT AND TRADEMARK OFFICE

Commissioner for Patents
United States Patent and Trademark Office
P.O. Box 1450
Alexandria, VA 22313-1450
www.uspto.gov

THE NATH LAW GROUP
112 SOUTH WEST STREET
ALEXANDRIA VA 22314

MAILED

APR 01 2010

OFFICE OF PETITIONS

In re Application of	:	
Andrieux et al.	:	DECISION ON PETITION
Application No. 11/798,455	:	TO WITHDRAW
Filed: May 14, 2007	:	FROM RECORD
Attorney Docket No. 40538Y	:	

CORRECTED DECISION

This is a decision on the Request to Withdraw as attorney or agent of record under 37 C.F.R. § 1.36(b) filed January 28, 2010, which is being treated as a request to withdraw from employment in a proceeding before the Office under 37 C.F.R. § 10.40.

The request is **DISMISSED**.

A review of the file record indicates that The Nath Law Group does not have power of attorney in this patent application. Accordingly, the request to withdraw under 37 C.F.R. § 1.36(b) is not applicable.

The request to change the correspondence address of record is not accepted in view of The Nath Law Group not having power of attorney. See MPEP §§ 601.03 and 405.

A review of USPTO records reveals that the List Of Practitioners To Be Recognized By The Office As Being Of Record, filed May 14, 2007 by William E. Beaumont, was erroneously accepted as a power of attorney. Accordingly, in view of these facts the power of attorney must revert to the original power of attorney appointed in the Oath/Declaration filed October 8, 2008. However, the change of correspondence address filed October 8, 2008 is considered proper.

Accordingly, all future communications from the Office will be directed solely to the above current address of record until proper instructions have been received.

Currently, there is an outstanding Office action mailed December 17, 2009 that requires a reply.

Telephone inquires concerning this decision should be directed to the undersigned at 571-272-7751.

Joan Olszewski

Joan Olszewski
Petitions Examiner
Office of Petitions

cc: Dickerson Wright PLLC
1875 Eye Street, NW
Suite 1200
Washington DC 20006

UNITED STATES PATENT AND TRADEMARK OFFICE

UNITED STATES DEPARTMENT OF COMMERCE
United States Patent and Trademark Office
Address: COMMISSIONER FOR PATENTS
P.O. Box 1450
Alexandria, Virginia 22313-1450
www.uspto.gov

APPLICATION NO.	FILING DATE	FIRST NAMED INVENTOR	ATTORNEY DOCKET NO.	CONFIRMATION NO.
11/798,463	05/14/2007	Yoshio Katsuda	132527	5024

7590 04/15/2010
OLIFF & BERRIDGE, PLC
P.O. BOX 320850
ALEXANDRIA, VA 22320-4850

EXAMINER
PAK, JOHN D

ART UNIT	PAPER NUMBER
1616	

NOTIFICATION DATE	DELIVERY MODE
04/15/2010	ELECTRONIC

DECISION GRANTING PETITION UNDER 37 CFR 1.138(d)

The declaration of express abandonment is recognized

This is in response to the petition under 37 CFR 1.138(d), requesting for a refund of any previously paid search fee and excess claims fee in the above-identified application.

The petition is granted.

The express abandonment is recognized. Any previously paid search fee and excess claims fee are hereby refunded.

Telephone inquiries should be directed to the Office of Data Management at (571) 272-4200.

Patent Publication Branch
Office of Data Management

Adjustment date: 04/14/2010 [illegible]
05/15/2007 YPOLITE: [illegible] 11798463
02 [illegible] -500.00 OP

FORM PET651G (Rev. 08/07)

UNITED STATES PATENT AND TRADEMARK OFFICE

Commissioner for Patents
United States Patent and Trademark Office
P.O. Box 1450
Alexandria, VA 22313-1450
www.uspto.gov

TROXELL LAW OFFICE, PLLC
P.O. Box 1370
Annandale VA 22003

COPY MAILED

AUG 24 2009

OFFICE OF PETITIONS

In re Application of	:	
Wu et al.	:	
Application No. 11/798503	:	DECISION ON
Filing or 371(c) Date: 05/14/2007	:	PETITION
Title of Invention: WAFER DICING METHOD	:	

This is a decision on the Petition to Revive an Unintentionally Abandoned Application Under 37 C.F.R. § 1.137(b), filed July 3, 2009.

The petition is **GRANTED**.

This application became abandoned for failure to timely pay the issue and publication fees on or before April 28, 2009, as required by the Notice of Allowance and Fee(s) Due, mailed January 27, 2009. Accordingly, the date of abandonment of this application is April 29, 2009.

The petition satisfies the requirements of 37 CFR 1.137(b) in that petitioner has supplied (1) the reply in the form of payment of the issue fee and the publication fee; (2) the petition fee; and (3) a proper statement of unintentional delay.

The application file does not indicate a change of address has been filed in this case, although the address given on the petition differs from the address of record. A change of address should be filed in this case in accordance with MPEP 601.03. A courtesy copy of this decision is being mailed to the address noted on the petition. However, until otherwise instructed, all future correspondence regarding this application will be mailed solely to the address of record.

Applicant is advised that, in patented files: requests for changes of correspondence address, powers of attorney, revocations of powers of attorney, withdrawal of attorney and submissions under 37 CFR 1.501: Designation of, or changes to, a fee address, should be addressed to Mail Stop M Correspondence.

Telephone inquiries concerning this matter should be directed to the undersigned at (571) 272-3232.

This application is being referred to the Office of Data Management for processing into a patent.

/Derek L. Woods/
Derek L. Woods
Attorney
Office of Petitions

CC: YEN-JUNG SUNG
21-80 38TH STREET #C8
ASTORIA, NY 11105

UNITED STATES PATENT AND TRADEMARK OFFICE

Commissioner for Patents
United States Patent and Trademark Office
P.O. Box 1450
Alexandria, VA 22313-1450
www.uspto.gov

Law Office of John K. Pike, PLLC
2121 Eisenhower Avenue, Suite 200
Alexandria VA 22314

COPY MAILED

AUG 25 2008

OFFICE OF PETITIONS

In re Application of :
Bucala, et al. :
Application No. 11/798,505 :
Filed: May 14, 2007 :
Attorney Docket No. 9511-114 CONT 2 :
For: THERAPEUTIC USES OF FACTORS WHICH INHIBIT OR NEUTRALIZE MIF ACTIVITY

ON PETITION

This is a decision on the petition under 37 CFR 1.137(b), filed June 29, 2008, to revive the above-identified application.

The petition under 37 CFR 1.137(b) is **GRANTED**.

This application became abandoned for failure to timely and properly reply to the Notice to File Missing Parts of Application mailed September 19, 2007, which set a two month shortened statutory period to submit the basic filing fee, a substitute specification, the surcharge, the application search fee, the application examination fee, and additional claim fees. Applicants obtained a four month extension of time pursuant to 37 CFR 1.136(a) and filed a substitute specification, the surcharge, the application search fee, the application examination fee, additional claim fees, and a partial payment of the basic filing fee on March 19, 2008. A Notice of Incomplete Reply was mailed on March 27, 2008. The Notice of Incomplete Reply informed applicants that there was a $80.00 shortfall in the amount submitted for the basic filing fee. On May 8, 2008, applicants filed a $150.00 basic filing fee and submitted a $60.00 one month extension of time. This application became abandoned on March 20, 2008. A Notice of Abandonment was mailed on June 3, 2008.

Applicants have submitted a proper reply to the September 19, 2007 Notice in the form of the $150.00 basic filing fee, a substitute specification, the surcharge, the application search fee, the application examination fee, and additional claim fees, an acceptable statement of the unintentional nature of the delay in responding to the September 19, 2007 Notice, and the petition fee. Accordingly, the petition under 37 CFR 1.137(b) is granted.

Regarding fees: Pursuant to 37 CFR 1.136, an extension of time must be filed prior to the expiration of the maximum period obtainable for reply to avoid abandonment. Accordingly,

since the $60.00 one month extension of time submitted on May 8, 2008 was submitted subsequent to the expiration of the maximum period obtainable for reply, this fee is unnecessary and will be refunded to petitioners' credit card. In addition, petitioners have paid two $155.00 basic filing fees. One will be refunded to petitioners' credit card.

After the mailing of this decision, the file will be returned to the Office of Patent Application Processing for further pre-examination processing.

Telephone inquiries concerning this matter may be directed to the undersigned at (571) 272-3230.

Shirene Willis Brantley
Senior Petitions Attorney
Office of Petitions

UNITED STATES PATENT AND TRADEMARK OFFICE

Commissioner for Patents
United States Patent and Trademark Office
P.O. Box 1450
Alexandria, VA 22313-1450
www.uspto.gov

POSZ LAW GROUP, PLC
12040 SOUTH LAKES DRIVE
SUITE 101
RESTON, VA 20191

COPY MAILED

JUL 06 2009

OFFICE OF PETITIONS

In re Application of	:	
Klaus Nierle	:	
Application No. 11/798,513	:	DECISION ON PETITION
Filed: May 15, 2007	:	TO WITHDRAW
Attorney Docket No. VT062766	:	FROM RECORD

This is a decision on the Request to Withdraw as attorney or agent of record under 37 C.F.R. § 1.36(b), filed May 29, 2009.

The request is **APPROVED**.

R. Eugene Varndell, Jr.; David G. Posz; James E. Barlow; Cynthia K. Nicholson; Brian C. Altmiller; Robert ScottII; and Debra G. Shoemaker have been withdrawn as attorneys or agents of record; all other attorneys remain of record.

The request was signed by David G. Posz.

All future correspondence will be directed to assignee Qimonda North America Corp. at the address indicated below.

Telephone inquiries concerning this decision should be directed to Irvin Dingle at (571) 272-3210.

Irvin Dingle
Petitions Examiner
Office of Petitions

cc: Qimonda North America Corp.
c/o Qimonda AG
Patent Administration Postfach 83 07 07
Munich D-817-07 DE GERMANY

UNITED STATES PATENT AND TRADEMARK OFFICE

COMMISSIONER FOR PATENTS
UNITED STATES PATENT AND TRADEMARK OFFICE
P.O. BOX 1450
ALEXANDRIA, VA 22313-1450
www.uspto.gov

07 DEC 2007

BACON & THOMAS, PLLC
625 SLATERS LANE
FOURTH FLOOR
ALEXANDRIA, VA 22314

In re Application of PIENE et al	:	
U.S. Application No.: 11/798,519	:	
Filing Date: 15 May 2007	:	DECISION
Attorney Docket No.: PIEN3001C/REF	:	
For: PROCESS FOR PREPARING ORAL	:	
CALCIUM COMPOSITIONS	:	

This is in response to applicant's "Petition Under 37 C.F.R. 1.181" filed 16 August 2007.

The petition requests that the status of parent U.S. application number 09/831,553 be corrected to reflect that U.S. application number 09/831,553 is a continuation in part of international application number PCT/GB99/03666.

In order to effect a correction in a particular patent application, it is necessary to file a petition in such application. Thus, in order to correct the status of U.S. application number 09/831,553, a petition must be filed in U.S. application number 09/831,553.[1]

For the reasons above, the petition under 37 CFR 1.181 is DISMISSED AS MOOT.

Please direct further correspondence with respect to this matter to Mail Stop PCT, Commissioner for Patents, Office of PCT Legal Administration, P.O. Box 1450, Alexandria, Virginia 22313-1450, with the contents of the letter marked to the attention of the Office of PCT Legal Administration.

BryanLin

Bryan Lin
PCT Legal Examiner
PCT Legal Office

Telephone: 571-272-3303
Facsimile: 571-273-0459

[1] Petitioner is advised that in the event a petition is filed in U.S. application number 09/831,553 by a practitioner, the practitioner's signature shall constitute a representation to the Office that he or she is authorized to represent the party on whose behalf he or she is acting. See 37 CFR 1.34.

UNITED STATES PATENT AND TRADEMARK OFFICE

UNITED STATES DEPARTMENT OF COMMERCE
United States Patent and Trademark Office
Address: COMMISSIONER FOR PATENTS
P.O. Box 1450
Alexandria, Virginia 22313-1450
www.uspto.gov

BACON & THOMAS, PLLC
625 SLATERS LANE
FOURTH FLOOR
ALEXANDRIA, VA 22314-1176

Mail Date: 07/02/2010

Applicant	: Jan Yngvar Piene	: DECISION ON REQUEST FOR
Patent Number	: 7638143	: RECALCULATION of PATENT
Issue Date	: 12/29/2009	: TERM ADJUSTMENT IN VIEW
Application No	: 11/798,519	: OF WYETH AND NOTICE OF INTENT TO
Filed	: 05/15/2007	: ISSUE CERTIFICATE OF CORRECTION
		:

The Request for Recalculation is **GRANTED** to the extent indicated.

The patent term adjustment has been determined to be **0** days. The USPTO will *sua sponte* issue a certificate of correction reflecting the amount of PTA days determined by the recalculation.

Prior to the issuance of the certificate of correction, the USPTO will afford patentee an opportunity to be heard and request reconsideration. Accordingly, patentee has **one month or thirty (30) days**, whichever is longer, to file a request for reconsideration of this patent term adjustment calculation. See 35 U.S.C. 154(b)(3)(B)(ii) and 37 CFR 1.322(a)(4). No extensions of time will be granted under 37 CFR 1.136.

Patentee should use document code PET.OP if electronically filing a request for reconsideration of this patent term adjustment calculation. The patentee must also include the information required by 37 CFR 1.705(b)(2) and the fee required by 37 CFR 1.18(e). If patentee does not file a timely request for reconsideration of this patent term adjustment calculation including the information required by 37 CFR 1.705(b)(2) and the fee required by 37 CFR 1.18(e), the USPTO will issue a certificate of correction reflecting the PTA determination noted above.

Patentee should be aware that in order to preserve the right to review in the United States District Court for the District of Columbia of the USPTO patent term adjustment determination, patentee must ensure that he or she also take the steps required under 35 U.S.C. 154(b)(4)(A) in a timely manner. Nothing in the request for recalculation should be construed as providing an alternative time frame for commencing a civil action under 35 U.S.C. 154(b)(4)(A).

Any questions concerning this decision should be directed to the Office of Patent Legal Administration at 571-272-7702.

SPE RESPONSE FOR CERTIFICATE OF CORRECTION

Paper No.:20091103

DATE : November 18, 2009

TO SPE OF : ART UNIT 2627

SUBJECT : Request for Certificate of Correction on Patent No.: 7,558,172

A response is requested with respect to the accompanying request for a certificate of correction.

Please complete this form and return with file, within **7** days to:
Certificates of Correction Branch - PK 3-910
Palm location **7590** - Tel. No. 305-8201

With respect to the change(s) requested, correcting Office and/or Applicant's errors, should the patent read as shown in the certificate of correction? No new matter should be introduced, nor should the scope or meaning of the claims be changed.

Thank You For Your Assistance **Certificates of Correction Branch**

The request for issuing the above-identified correction(s) is hereby:
Note your decision on the appropriate box.

☒ **Approved** **All** changes apply.

☐ **Approved in Part** Specify below which changes **do not** apply.

☐ **Denied** State the reasons for denial below.

Comments:

SPE: /Andrea L. Wellington/ **Art Unit** 2627

UNITED STATES PATENT AND TRADEMARK OFFICE

COMMISSIONER FOR PATENTS
UNITED STATES PATENT AND TRADEMARK OFFICE
P.O. BOX 1450
ALEXANDRIA, VA 22313-1450
WWW.USPTO.GOV

Paper No. None

WESTERMAN, HATTORI, DANIELS & ADRIAN, LLP
1250 CONNECTICUT AVENUE, NW
SUITE 700
WASHINGTON DC 20036

COPY MAILED

SEP 24 2007

OFFICE OF PETITIONS

In re Application of	:	
Taiji Ema et al.	:	
Application No. 11/798,671	:	DECISION ON PETITION
Filed: May 16, 2007	:	PURSUANT TO 37 C.F.R.
Attorney Docket No.: 960045F	:	§ 1.182
Title: METHOD FOR FABRICATING	:	
SEMICONDUCTOR STORAGE DEVICE	:	

This is a decision on the petition filed June 21, 2007, requesting that the above-identified application, including pages 59, 79, 80, and 91-94 of the specification, be accorded a filing date of May 16, 2007 as part of the original disclosure.

The application was deposited on May 16, 2007. However, on June 12, 2007, the Office of Initial Patent Examination (OIPE) mailed a "Notice of Omitted Item(s) in a Nonprovisional Application" (notice), stating that the application had been accorded a filing date, and advising applicants that pages 59, 79, 80, and 91-94 of the specification appeared to have been omitted. The notice set a two-month period for reply.

In response, on June 21, 2007, applicants filed the present petition. The petition is further accompanied by a copy of pages 59, 79, 80, and 91-94 of the specification, along with a copy of applicants' postcard receipt acknowledging receipt of "Specification - (164 pages)" in the United States Patent and Trademark Office (Office) on May 16, 2007. Petitioner requests that pages 59, 79, 80, and 91-94 of the specification be accorded a filing date of May 16, 2007.

It is noted that 149 pages of specification, including pages 1-58, 60-78, 81-90, and 95-156, have been located in the electronic file, along with 7 pages of claims and a 1 page abstract.

Upon review of the record, the above-mentioned pages have not been located among the application papers. However, the evidence is convincing that the application papers deposited on May 16, 2007 included pages 59, 79, 80, and 91-94 of the specification, and these sheets were subsequently misplaced in the Office.

Therefore, the application, including pages 59, 79, 80, and 91-94 of the specification, was complete on filing and entitled to a filing date of May 16, 2007 as part of the original disclosure.

Accordingly, the petition is **GRANTED**.

The notice mailed June 12, 2007 was sent in error, and is hereby **VACATED**. Therefore, no petition fee is necessary, and the $400.00 petition fee has not been charged to Petitioner's Deposit Account.

The application file is being returned to OIPE for further processing with a filing date of May 16, 2007, using the original application papers filed on that date, as well as pages 59, 79, 80, and 91-94 of the specification submitted on June 21, 2007, and for noting in Office records that these sheets were present on filing.

The general phone number for the Office of Petitions which should be used for status requests is (571) 272-3282. Telephone inquiries regarding this decision should be directed to the undersigned at (571) 272-3225.

Paul Shanoski

Paul Shanoski
Senior Attorney
Office of Petitions
United States Patent and Trademark Office

UNITED STATES PATENT AND TRADEMARK OFFICE

Commissioner for Patents
United States Patent and Trademark Office
P.O. Box 1450
Alexandria, VA 22313-1450
www.uspto.gov
DIW Oct-07

YOUNG & THOMPSON
745 SOUTH 23RD STREET
2ND FLOOR
ARLINGTON VA 22202

In re Application of	:	
Olson et al.	:	DECISION ON PETITION
Application Number: 11/798683	:	
Filed: 05/16/2007	:	
Attorney Docket Number: 1522-1001-3	:	

This is in response to the "PETITION UNDER 37 C.F.R. §1.57(a)" filed on 24 August, 2007, which is treated as a petition requesting that the above-referenced application be accorded a filing date of 16 May, 2007. This petition is being treated pursuant to 37 CFR 1.53(e)(2)[1].

Application papers in the above-identified application were deposited on 16 May, 2007. However, on 25 June, 2007, the Office of Patent Application Processing mailed applicants a "Notice of Incomplete Nonprovisional Application," notifying applicants that the application papers had not been accorded a filing date because the application was deposited without drawings.[2] It was additionally noted that Pages 9-11 of the specification (description and claims) appeared to have been omitted.

In response, applicants timely filed this petition. Applicants assert that the drawings were present on filing inasmuch as the application is entitled to a benefit claim under 37 CFR 1.78 of a prior-filed application that was present on the filing date. Applicants further have supplied six (6) sheets of drawings in a preliminary amendment, and request that the drawings be entered.

Petitioners further aver that they "believe that pages 9-11 of the specification were provided with the application. Indeed, the postcard receipt filed with the application indicated that 27

[1] Any request for review of a notification pursuant to paragraph (e)(1) of this section, or a notification that the original application papers lack a portion of the specification or drawing(s), must be by way of a petition pursuant to this paragraph accompanied by the fee set forth in § 1.17(f). In the absence of a timely (§ 1.181(f)) petition pursuant to this paragraph, the filing date of an application in which the applicant was notified of a filing error pursuant to paragraph (e)(1) of this section will be the date the filing error is corrected.

[2] Drawings were filed with the papers subsequently filed on 28 June, 2007, and the application was accorded a filing date of 28 June, 2007.

pages of specification were included." Pages 9-11 of the specification are also included with the preliminary amendment.

Petitioners' arguments and evidence have been considered. However, it is controlling that a review of the application confirms that as filed the application contained at least one method claim. MPEP 601.01(f) provides that:

> It has been USPTO practice to treat an application that contains at least one process or method claim as an application for which a drawing is not necessary for an understanding of the invention under 35 U.S.C. 113 (first sentence).

Thus, pursuant to § 601.01(f), a drawing is not considered essential for a filing date. Thus, the application is entitled to a filing date without drawings present in the application.

Accordingly, the Office should have mailed a Notice of Omitted Items and not a Notice of Incomplete Nonprovisional Application. As stated in MPEP 601.01(g), if an application is entitled to a filing date, the mailing of a Notice of Omitted Items will permit *inter alia*:

> If an application was filed on or after September 21, 2004, and contains a claim under 37 CFR 1.55 for priority of a prior-filed foreign application, or a claim under 37 CFR 1.78 for the benefit of a prior-filed provisional, nonprovisional, or international application that was present on the filing date of the application, and the omitted portion of the drawing(s) was inadvertently omitted from the application and is completely contained in the prior-filed application, applicant may submit an amendment to include the inadvertently omitted portion of the drawing(s) pursuant to 37 CFR 1.57(a). The amendment should be submitted in response to the Office action and must comply with 37 CFR 1.57(a) and 37 CFR 1.121. See MPEP § 201.17.

No petition is required. Receipt of the preliminary amendment filed to enter the drawings is acknowledged. The preliminary amendment will be reviewed for new matter by the examiner.

To the extent the instant petition requests a filing date of 16 May, 2007, with no drawings present in the application, the petition is **GRANTED**.

However, with regard to Pages 9-11 of the specification, the mailing of a "Notice of Omitted Items" permits the applicant to either: (1) promptly establish prior receipt in the PTO of the specification page(s) at issue (generally by way of a date-stamped postcard receipt (MPEP 503)), or (2) promptly submit the omitted specification page(s) in a nonprovisional application and accept the date of such submission as the application filing date. An applicant asserting that the missing page(s) of specification were in fact deposited in the PTO with the application papers must file a petition (and the appropriate petition fee) with evidence of such deposit. An applicant desiring to submit the omitted page(s) of specification in a nonprovisional application and accept the date of such submission as the application filing date must file any page(s) of specification with an oath or declaration in compliance with 37 CFR 1.63 and 1.64 referring to such page(s) of specification and a petition under 37 CFR 1.182 (with the petition fee under 37 CFR 1.17(h)) requesting the later filing date within two months of the date of the "Notice of Omitted Items" (37 CFR 1.181(f)).

MPEP 201.06(c)(IV) states that:

> An applicant may incorporate by reference the prior application by including, in the continuation or divisional application-as-filed, an explicit statement that such specifically enumerated prior application or applications are "hereby incorporated by reference." <u>The statement must appear in the specification</u>. See 37 CFR 1.57(b) and MPEP § 608.01(p). The inclusion of this incorporation by reference statement will permit an applicant to amend the continuation or divisional application to include subject matter from the prior application(s), <u>without the need for a petition</u> provided the continuation or divisional application is entitled to a filing date notwithstanding the incorporation by reference.
>
> (emphasis supplied)
>
> For applications filed on or after September 21, 2004, a claim under 35 U.S.C. 120 and 37 CFR 1.78 for benefit of a prior-filed nonprovisional application or international application designating the U.S. that was present on the filing date of the continuation or divisional application is considered an incorporation by reference of the prior-filed application as to inadvertently omitted material, subject to the conditions and requirements of 37 CFR 1.57(a).

The application cannot be granted a filing date of 16 May, 2007, with Pages 9-11 of the specification as a part of the application as filed because petitioners have not provided evidence (*e.g.*, a copy of the aforementioned postcard as provided in MPEP 503) that Pages 9-11 of the specification were among the application papers filed on 16 May, 2007.[3]

As no petition is necessary to amend the specification, the examiner will review the preliminary amendment for new matter in due course.

However, as the Notice mailed on 25 June, 2007, properly indicated that Pages 9-11 **appeared** to have been omitted, the Notice was properly mailed and will not be withdrawn with respect to the omitted items. Accordingly, the petition was necessitated in part by an error on the part of petitioner. Therefore, the petition fee will not be refunded.

The Office of Patent Application Processing (OPAP) has been advised of this decision. Pursuant to this decision, the application has been referred to OPAP for:

- **correction of the filing date to 16 May, 2007**;
- **for indication in Office records, as appropriate, that "0" sheets of drawings were present on filing** and
- **for issuance of a filing receipt.**

Telephone inquiries concerning this matter may be directed to Senior Petitions Attorney, Douglas I. Wood at 571.272.3231.

Supervisor Office of Petitions for

Charles Pearson
Director
Office of Petitions

[3] Furthermore, it is noted that no claim to benefit, or incorporation by reference, of the prior-filed application has been made in the specification as filed, as required by 37 CFR 1.57. Rather, the claim to priority was made in the ADS present on filing, which is not in accordance with the practice set forth in 37 CFR 1.57.

UNITED STATES PATENT AND TRADEMARK OFFICE

Commissioner for Patents
United States Patent and Trademark Office
P.O. Box 1450
Alexandria, VA 22313-1450
www.uspto.gov
DIW Oct-08

YOUNG & THOMPSON
745 SOUTH 23RD STREET
2ND FLOOR
ARLINGTON VA 22202

COPY MAILED

OCT 14 2008

OFFICE OF PETITIONS

In re Application of :
Olson et al. : DECISION ON PETITION
Application Number: 11/798683 :
Filed: 05/16/2007 :
Attorney Docket Number: 1522-1001-3 :

This is in response to the "PETITION UNDER 37 C.F.R. §1.57(a)" filed on August 24, 2007, which is treated as a petition requesting that the above-referenced application be accorded a filing date of 16 May, 2007. This petition is being treated pursuant to 37 CFR 1.53(e)(2)[1].

Application papers in the above-identified application were deposited on May 16, 2007. However, on June 25, 2007, the Office of Patent Application Processing mailed applicants a "Notice of Incomplete Nonprovisional Application," notifying applicants that the application papers had not been accorded a filing date because the application was deposited without drawings.[2] It was additionally noted that Pages 9-11 of the specification (description and claims) appeared to have been omitted.

In response, applicants timely filed this petition. Applicants assert that the drawings were present on filing inasmuch as the application is entitled to a benefit claim under 37 CFR 1.78 of a prior-filed application that was present on the filing date. Applicants further have supplied six (6) sheets of drawings in a preliminary amendment, and request that the drawings be entered.

Petitioners further aver that they "believe that pages 9-11 of the specification were provided with the application. Indeed, the postcard receipt filed with the application indicated that 27

[1] Any request for review of a notification pursuant to paragraph (e)(1) of this section, or a notification that the original application papers lack a portion of the specification or drawing(s), must be by way of a petition pursuant to this paragraph accompanied by the fee set forth in § 1.17(f). In the absence of a timely (§ 1.181(f)) petition pursuant to this paragraph, the filing date of an application in which the applicant was notified of a filing error pursuant to paragraph (e)(1) of this section will be the date the filing error is corrected.

[2] Drawings were filed with the papers subsequently filed on 28 June, 2007, and the application was accorded a filing date of 28 June, 2007.

pages of specification were included." Pages 9-11 of the specification are also included with the preliminary amendment.

Petitioners' arguments and evidence have been considered. However, it is controlling that a review of the application confirms that as filed the application contained at least one method claim. MPEP 601.01(f) provides that:

> It has been USPTO practice to treat an application that contains at least one process or method claim as an application for which a drawing is not necessary for an understanding of the invention under 35 U.S.C. 113 (first sentence).

Thus, pursuant to § 601.01(f), a drawing is not considered essential for a filing date. Thus, the application is entitled to a filing date without drawings present in the application.

Accordingly, the Office should have mailed a Notice of Omitted Items and not a Notice of Incomplete Nonprovisional Application. As stated in MPEP 601.01(g), if an application is entitled to a filing date, the mailing of a Notice of Omitted Items will permit *inter alia*:

> If an application was filed on or after September 21, 2004, and contains a claim under 37 CFR 1.55 for priority of a prior-filed foreign application, or a claim under 37 CFR 1.78 for the benefit of a prior-filed provisional, nonprovisional, or international application that was present on the filing date of the application, and the omitted portion of the drawing(s) was inadvertently omitted from the application and is completely contained in the prior-filed application, applicant may submit an amendment to include the inadvertently omitted portion of the drawing(s) pursuant to 37 CFR 1.57(a). The amendment should be submitted in response to the Office action and must comply with 37 CFR 1.57(a) and 37 CFR 1.121. See MPEP § 201.17.

No petition is required. Receipt of the preliminary amendment filed to enter the drawings is acknowledged. The preliminary amendment will be reviewed for new matter by the examiner.

To the extent the instant petition requests a filing date of May 16, 2007, with no drawings present in the application, the petition is **GRANTED**.

However, with regard to Pages 9-11 of the specification, the mailing of a "Notice of Omitted Items" permits the applicant to either: (1) promptly establish prior receipt in the PTO of the specification page(s) at issue (generally by way of a date-stamped postcard receipt (MPEP 503)), or (2) promptly submit the omitted specification page(s) in a nonprovisional application and accept the date of such submission as the application filing date. An applicant asserting that the missing page(s) of specification were in fact deposited in the PTO with the application papers must file a petition (and the appropriate petition fee) with evidence of such deposit. An applicant desiring to submit the omitted page(s) of specification in a nonprovisional application and accept the date of such submission as the application filing date must file any page(s) of specification with an oath or declaration in compliance with 37 CFR 1.63 and 1.64 referring to such page(s) of specification and a petition under 37 CFR 1.182 (with the petition fee under 37 CFR 1.17(h)) requesting the later filing date within two months of the date of the "Notice of Omitted Items" (37 CFR 1.181(f)).

MPEP 201.06(c)(IV) states that:

> An applicant may incorporate by reference the prior application by including, in the continuation or divisional application-as-filed, an explicit statement that such specifically enumerated prior application or applications are "hereby incorporated by reference." The statement must appear in the specification. See 37 CFR 1.57(b) and MPEP § 608.01(p). The inclusion of this incorporation by reference statement will permit an applicant to amend the continuation or divisional application to include subject matter from the prior application(s), without the need for a petition provided the continuation or divisional application is entitled to a filing date notwithstanding the incorporation by reference.
>
> (emphasis supplied)
>
> For applications filed on or after September 21, 2004, a claim under 35 U.S.C. 120 and 37 CFR 1.78 for benefit of a prior-filed nonprovisional application or international application designating the U.S. that was present on the filing date of the continuation or divisional application is considered an incorporation by reference of the prior-filed application as to inadvertently omitted material, subject to the conditions and requirements of 37 CFR 1.57(a).

The application cannot be granted a filing date of May 16, 2007, with Pages 9-11 of the specification as a part of the application as filed because petitioners have not provided evidence (*e.g.*, a copy of the aforementioned postcard as provided in MPEP 503) that Pages 9-11 of the specification were among the application papers filed on May 16, 2007.[3]

As no petition is necessary to amend the specification, the examiner will review the preliminary amendment for new matter in due course.

However, as the Notice mailed on June 25, 2007, properly indicated that Pages 9-11 **appeared** to have been omitted, the Notice was properly mailed and will not be withdrawn with respect to the omitted items. Accordingly, the petition was necessitated in part by an error on the part of petitioner. Therefore, the petition fee will not be refunded.

The Office of Patent Application Processing (OPAP) has been advised of this decision. Pursuant to this decision, the application has been referred to OPAP for:

- **correction of the filing date to May 16, 2007**;
- **for indication in Office records, as appropriate, that "0" sheets of drawings were present on filing** and
- **for issuance of a filing receipt.**

Telephone inquiries concerning this matter may be directed to Senior Petitions Attorney, Douglas I. Wood at 571.272.3231.

Anthony Knight
Supervisor
Office of Petitions

[3] Furthermore, it is noted that no claim to benefit, or incorporation by reference, of the prior-filed application has been made in the specification as filed, as required by 37 CFR 1.57. Rather, the claim to priority was made in the ADS present on filing, which is not in accordance with the practice set forth in 37 CFR 1.57.

UNITED STATES PATENT AND TRADEMARK OFFICE

Commissioner for Patents
United States Patent and Trademark Office
P.O. Box 1450
Alexandria, VA 22313-1450
www.uspto.gov
DIW Jan-09

YOUNG & THOMPSON
209 Madison Street
Suite 500
ALEXANDRIA VA 22314

COPY MAILED
JAN 16 2009

In re Application of	:	
Olson et al.	:	
Application Number: 11/798683	:	DECISION ON PETITION
Filing Date: 05/16/2007	:	
Attorney Docket Number: 1522-1001-3	:	

This is in response to the "REQUEST FOR CORRECTED DECISION ON PETITION," filed on December 15, 2008, which is treated as a renewed petition under 37 CFR 1.57 requesting that the above-identified application, including six (6) sheets of drawings and Pages 9-11 of the specification, be accorded a filing date of May 16, 2007.

The petition is **DISMISSED.**

Application papers in the above-identified application were deposited on May 16, 2007. However, on June 25, 2007, the Office of Patent Application Processing mailed applicants a "Notice of Incomplete Nonprovisional Application," notifying applicants that the application had not been accorded a filing date because the application was deposited without drawings. Applicants were also notified that Pages 9-11 of the specification (description and claims) appeared to have been omitted.

In response on August 24, 2007, the initial petition was filed. Petitioners asserted that the drawings were present on filing because the application as filed effectively incorporates the drawings of the apparent application pursuant to 37 CFR 1.57(a).

Petitioners further stated that they believe pages 9-11 of the specification were provided with the application, and state that a postcard receipt filed with the application indicated that 27 pages of specification were included.

On October 14, 2008, the petition was granted to the extent that the application was accorded a filing date of May 16, 2007 with no (0) sheets of drawings because the application contained at least one method claim. Pursuant to MPEP 601.01(f), a drawing is not considered essential for a filing date if the application as filed contains at least one method claim.

Petitioners were further notified that the "Notice" mailed on June 25, 2007 would not be withdrawn with regards to Pages 9-11 because, based on the showing of record, pages 9-11 appeared to have been omitted. The decision further stated that the preliminary amendment filed with the petition, including the inadvertently omitted Pages 9-11, would be review by the examiner in due course for new matter.

On December 15, 2008, the subject renewed petition was filed. Petitioners request again that the application, including the drawings and Pages 9-11 of the specification, be accorded a filing date of May 16, 2007.

Petitioners state, in pertinent part:

> Applicants hereby respectfully request correction of that decision insofar as it accords such filing date only to the application as lacking the drawings and pp. 9-11 of the specification. The Decision on Petition appears to base that aspect of its decision on the statements in MPEP 201.06(c)(IV) and Rule 57(b) that an incorporation by reference of a prior-filed application "must appear in the specification."
>
> However, Rule 57(b) expressly states that such requirement does not apply to Rule 57(a), which governs the present situation. Indeed, Rule 57(a) states that the savings provisions of that rule are available even in the case where "**all**...of the specification...is inadvertently omitted." (Emphasis added). Plainly, that provision would not make sense if a statement of incorporation by reference were required under that rule to be physically present in the specification as filed. Instead, it is sufficient under Rule 57(a) that the application papers as filed merely claim priority of a prior-filed application, i.e., under Rule 57(a) no statement beyond the claim for priority is required, and it need not appear in the specification.

Petitioners' arguments have been carefully considered, but are not persuasive. In this regard, MPEP 201.06(c)(IV) states:

> If a continuation or divisional application as originally filed on or after September 21, 2004 does not include an explicit incorporation by reference statement and is entitled to a filing date despite the inadvertent omission of a portion of the prior application(s), applicant may be permitted to add the omitted material by way of an amendment under 37 CFR 1.57(a).
>
> If an application as originally filed included a proper explicit incorporation by reference statement (or an explicit incorporation by reference statement that has been made effective under 37 CFR 1.57(g)), the omitted specification page(s) and/or drawing figure(s) may be added by amendment provided the omitted item(s) contains only subject matter in common with a document that has been properly incorporated by reference. If the Office identified the omitted item(s) in a "Notice of Omitted Item(s)," applicant need not respond to the "Notice of Omitted Item(s)." Applicant should, however, submit the amendment adding the omitted material prior to the first Office action to avoid delays in the prosecution of the application. See MPEP § 601.01(d) and § 601.01(g).

At the outset, petitioners are correct that 37 CFR 1.57(a) and MPEP 201.06(c)(IV) do not require that the claim for priority "must appear in the specification." 37 CFR 1.57(a) simply requires that a claim under 37 CFR 1.55 or 1.78 be present on filing of the application papers. 37 CFR 1.78(a)(2)(iii), likewise, permits the required reference to be included in an application data sheet pursuant to 37 CFR 1.76 **or** in the first sentence(s) of the specification following the title.

As the application papers deposited on May 16, 2007, included an Application Data Sheet including a claim of benefit to the prior-filed application, the requirements of 37 CFR §§ 1.78 and 1.57 were met. No petition is required to accompany the amendment under 37 CFR 1.57 to add the inadvertently omitted material.

Nevertheless, the showing of record remains that the drawings and Pages 9-11 of the specification were, in fact, inadvertently omitted. The Image File Wrapper is the official file, and a review thereof reveals that no Pages 9-11 or sheets of drawings received on May 16, 2007, are located therein.

An applicant alleging that a paper was filed in the Office and later misplaced has the burden of proving the allegation by a preponderance of the evidence. The fact that petitioners believe

that the omitted items were (or should have been) timely received in the Office, is not more persuasive than the date the papers are shown to have been received in the official file.

A postcard receipt which itemizes and properly identifies the items which are being filed serves as *prima facie* evidence of receipt in the USPTO of all the items listed thereon on the date stamped thereon by the USPTO.[1]

Although petitioners concede in the original petition, filed on August 24, 2007, that the drawings were omitted from the application as filed, petitioners also state that the application was filed with an itemized postcard indicating pages 9-11 were filed with the original application papers. No copy of that postcard, however, has been provided. Accordingly, petitioners may file a renewed petition, accompanied by that postcard, supporting an assertion that the omitted items were in fact deposited in the USPTO on the "Office date" stamped on the postcard.

In summary, as petitioners have not provided convincing evidence that the six (6) drawing sheets and Pages 9-11 of the specification were among the application papers deposited on May 16, 2007, the application cannot be accorded a filing date with those items as a part of the original disclosure.

The petition fee has been received with the original petition. Since this petition was not necessitated by an error on the part of the USPTO, the petition fee will not be refunded.

The application will be referred to Technology Center 1652 for examination in due course.

Telephone inquiries concerning this matter may be directed to Senior Petitions Attorney Douglas I. Wood at (571) 272-3231.

Anthony Knight
Supervisor
Office of Petitions

---

[1] MPEP 503.

UNITED STATES PATENT AND TRADEMARK OFFICE

Commissioner for Patents
United States Patent and Trademark Office
P.O. Box 1450
Alexandria, VA 22313-1450
www.uspto.gov
DIW Feb-09

YOUNG & THOMPSON
209 Madison Street
Suite 500
ALEXANDRIA VA 22314

MAILED

FEB 24 2009

OFFICE OF PETITIONS

In re Application of	:	
Olson et al.	:	
Application Number: 11/798683	:	DECISION ON PETITION
Filing Date: 05/16/2007	:	
Attorney Docket Number: 1522-1001-3	:	

This is in response to the "RENEWED PETITION UNDER 37 C.F.R. § 1.57(A) AND REQUEST FOR REFUND OF PETITION FEE," filed on January 30, 2009, which is treated as a renewed petition under 37 CFR 1.57 requesting that the above-identified application, including six (6) sheets of drawings and Pages 9-11 of the specification, be accorded a filing date of May 16, 2007.

The petition is again **DISMISSED**.

Application papers in the above-identified application were deposited on May 16, 2007. However, on June 25, 2007, the Office of Patent Application Processing mailed applicants a "Notice of Incomplete Nonprovisional Application," notifying applicants that the application had not been accorded a filing date because the application was deposited without drawings. Applicants were also notified that Pages 9-11 of the specification (description and claims) appeared to have been omitted.

In response on August 24, 2007, the initial petition was filed. Petitioners asserted that the drawings were present on filing because the application as filed effectively incorporates the

drawings of the apparent application pursuant to 37 CFR 1.57(a).

Petitioners further stated that they believe pages 9-11 of the specification were provided with the application, and state that a postcard receipt filed with the application indicated that 27 pages of specification were included.

On October 14, 2008, the petition was granted to the extent that the application was accorded a filing date of May 16, 2007 with no (0) sheets of drawings because the application contained at least one method claim. Pursuant to MPEP 601.01(f), a drawing is not considered essential for a filing date if the application as filed contains at least one method claim.

Petitioners were further notified that the "Notice" mailed on June 25, 2007 would not be withdrawn with regards to Pages 9-11 because, based on the showing of record, pages 9-11 appeared to have been omitted. The decision further stated that the preliminary amendment filed with the petition, including the inadvertently omitted Pages 9-11, would be review by the examiner in due course for new matter.

On December 15, 2008, a renewed petition was filed. Petitioners request again that the application, including the drawings and Pages 9-11 of the specification, be accorded a filing date of May 16, 2007. On January 16, 2009, the renewed petition was dismissed because petitioners had not provided convincing evidence that the drawings and Pages 9-11 of the specification were present on filing. Petitioners were further advised that no petition was required to file a preliminary amendment under 37 CFR 1.57(a) to add the omitted drawings and specification pages because the application had been accorded a filing date.

On January 30, 2009, the present twice renewed petition was filed. Petitioners again assert that the application, including Pages 9-11 of the specification, is entitled to a filing date of May 16, 2007. Specifically, petitioners assert that a copy of a stamped postcard receipt showing receipt of 27 pages of the specification is enclosed with the petition.

Upon review of the papers submitted with the petition, however, no itemized postcard can be located. Accordingly, the petition is again dismissed. Any renewed petition should be accompanied by a copy of said itemized postcard bearing an "Office-date" stamp.

The application will be referred to Technology Center 1652 for examination in due course.

Telephone inquiries concerning this matter may be directed to Senior Petitions Attorney Douglas I. Wood at (571) 272-3231.

Anthony Knight
Supervisor
Office of Petitions

UNITED STATES PATENT AND TRADEMARK OFFICE

Commissioner for Patents
United States Patent and Trademark Office
P.O. Box 1450
Alexandria, VA 22313-1450
www.uspto.gov
DIW Apr-09

YOUNG & THOMPSON
209 Madison Street
Suite 500
ALEXANDRIA VA 22314

COPY MAILED

APR 27 2009

OFFICE OF PETITIONS

In re Application of	:	
Olson et al.	:	
Application Number: 11/798683	:	DECISION ON PETITION
Filing Date: 05/16/2007	:	
Attorney Docket Number: 1522-1001-3	:	

This is in response to the "SECOND RENEWED PETITION UNDER 37 C.F.R. § 1.57(A) AND REQUEST FOR REFUND OF PETITION FEE," filed on March 6, 2009, which is treated as a renewed petition requesting that the above-identified application, including Pages 9-11 of the specification, be accorded a filing date of May 16, 2007, as well as a request for refund of the petition fee.

The petition is **GRANTED to the extent indicated.**

Application papers in the above-identified application were deposited on May 16, 2007. However, on June 25, 2007, the Office of Patent Application Processing mailed applicants a "Notice of Incomplete Nonprovisional Application," notifying applicants that the application had not been accorded a filing date because the application was deposited without drawings. Applicants were also notified that Pages 9-11 of the specification (description and claims) appeared to have been omitted.

In response on August 24, 2007, the initial petition was filed. Petitioners asserted that the drawings were present on filing because the application as filed effectively incorporates the drawings of the apparent application pursuant to 37 CFR 1.57(a).

Petitioners further stated that they believe pages 9-11 of the specification were provided with the application, and state that a postcard receipt filed with the application indicated that 27 pages of specification were included.

On October 14, 2008, the petition was granted to the extent that the application was accorded a filing date of May 16, 2007 with no (0) sheets of drawings because the application contained at least one method claim. Pursuant to MPEP 601.01(f), a drawing is not considered essential for a filing date if the application as filed contains at least one method claim.

Petitioners were further notified that the "Notice" mailed on June 25, 2007 would not be withdrawn with regards to Pages 9-11 because, based on the showing of record, pages 9-11 appeared to have been omitted. Specifically, no postcard in accordance with MPEP 503 or other evidence of receipt of Pages 9-11 of the specification in the USPTO on May 16, 2007 had been provided. The decision further stated that the preliminary amendment filed with the petition, including the inadvertently omitted Pages 9-11, would be review by the examiner in due course for new matter.

On December 15, 2008, a renewed petition was filed. Petitioners again asserted that the application, including the drawings and Pages 9-11 of the specification, should be accorded a filing date of May 16, 2007. On January 16, 2009, the renewed petition was dismissed because petitioners had not provided convincing evidence that the drawings and Pages 9-11 of the specification were present on filing. Petitioners were further advised that no petition was required to file a preliminary amendment under 37 CFR 1.57(a) to add the omitted drawings and specification pages because the application had been accorded a filing date.

On January 30, 2009, a second renewed petition was filed. Petitioners again assert that the application, including Pages 9-11 of the specification, is entitled to a filing date of May 16, 2007. Specifically, petitioners assert that a copy of a stamped postcard receipt showing receipt of 27 pages of the specification is enclosed with the petition. On February 24, 2009, the petition was dismissed because no copy of the itemized postcard had been provided with the petition.

On March 6, 2009, the present third renewed petition was filed. Petitioners once again assert that the application, including Pages 9-11 of the specification, is entitled to a filing date of May 16, 2007. Specifically, petitioners assert that a copy of a stamped postcard receipt showing receipt of 27 pages of the specification is enclosed with the petition.

In support, petitioner has supplied a copy of the itemized return receipt postcard. The postcard identifies the application by the inventors' names, invention title, and attorney docket number. The postcard contains an "Office date" stamp of May 16, 2007 with the above-identified application number, and itemizes the filing of, *inter alia*, 27 pages of specification.

A review of record reveals that no Pages 9-11 of the specification received on May 16, 2007, are located among the application papers received on that date. However, the evidence is convincing that the application papers deposited on May 16, 2007, included Pages 9-11 of specification, including a claim, which was subsequently misplaced in the Office. Therefore, the application, including Pages 9-11 of the specification, including a claim, is entitled to a filing date of May 16, 2007.

In view of the above, the petition is granted to the extent that the application will be processed with the copy of Pages 9-11 pf the specification, supplied by preliminary amendment on August 24, 2007, as a part of the original disclosure.

With regards to the request for refund of the petition fee, 37 CFR 1.26(a) states that the Director may refund any fee paid by mistake or in excess of that required. In this regard, applicant requested and obtained consideration under 37 CFR 1.57(a) of the petition filed on August 24, 2007. As the fee was required for consideration under 37 CFR 1.57(a) the fee was properly paid. Rather, in filing the renewed petition accompanied by a postcard, petitioner has requested a change of purpose after the payment of a fee in that petitioner is now requesting that the application be considered, on petition under 37 CFR 1.53, to be complete as filed based on the itemized postcard. Such a change in purpose does not entitle applicant to a refund of the petition fee, and no refund of such will be made.[1] It is further noted that petitioner was repeatedly informed of the need for a postcard or other evidence of receipt of Pages 9-11 in the Office, but failed to provide such evidence until the filing of the subject renewed petition.

---

[1] See 37 CFR 1.26(a).

The application is being referred to the Office of Patent Application Processing for further processing with a filing date of May 16, 2007, using the application papers present on filing and Pages 9-11 of the specification as filed in the preliminary amendment, as a part of the original disclosure. Thereafter, the application will be referred to the Technology Center for examination in due course.

Telephone inquiries concerning this matter may be directed to Senior Petitions Attorney Douglas I. Wood at (571) 272-3231.

Anthony Knight
Supervisor
Office of Petitions

UNITED STATES PATENT AND TRADEMARK OFFICE

UNITED STATES DEPARTMENT OF COMMERCE
United States Patent and Trademark Office
Address: COMMISSIONER FOR PATENTS
P.O. Box 1450
Alexandria, Virginia 22313-1450
www.uspto.gov

APPLICATION NO.	FILING DATE	FIRST NAMED INVENTOR	ATTORNEY DOCKET NO.	CONFIRMATION NO.
11/798,796	05/17/2007	Satoshi Tagawa	01-1473	7157

7590 06/25/2010
POSZ LAW GROUP, PLC
12040 SOUTH LAKES DRIVE
SUITE 101
RESTON, VA 20191

EXAMINER
MANCHO, RONNIE M

ART UNIT	PAPER NUMBER
3664	

MAIL DATE	DELIVERY MODE
06/25/2010	PAPER

DECISION GRANTING PETITION UNDER 37 CFR 1.138(d)

The declaration of express abandonment is recognized

This is in response to the petition under 37 CFR 1.138(d), requesting for a refund of any previously paid search fee and excess claims fee in the above-identified application.

The petition is granted.

The express abandonment is recognized. Any previously paid search fee and excess claims fee are hereby refunded.

Telephone inquiries should be directed to the Office of Data Management at (571) 272-4200.

Patent Publication Branch
Office of Data Management

FORM PET651G (Rev. 08/07)

UNITED STATES PATENT AND TRADEMARK OFFICE

UNITED STATES DEPARTMENT OF COMMERCE
United States Patent and Trademark Office
Address: COMMISSIONER FOR PATENTS
P.O. Box 1450
Alexandria, Virginia 22313-1450
www.uspto.gov

BACON & THOMAS, PLLC
625 SLATERS LANE
FOURTH FLOOR
ALEXANDRIA, VA 22314-1176

Mail Date: 04/21/2010

Applicant	: Min-Hsun Hsieh	: DECISION ON REQUEST FOR
Patent Number	: 7589351	: RECALCULATION of PATENT
Issue Date	: 09/15/2009	: TERM ADJUSTMENT IN VIEW
Appliction No	: 11/798,803	: OF WYETH AND NOTICE OF INTENT TO
Filed	: 05/17/2007	: ISSUE CERTIFICATE OF CORRECTION
		:

The Request for Recalculation is **GRANTED** to the extent indicated.

The patent term adjustment has been determined to be **294** days. The USPTO will *sua sponte* issue a certificate of correction reflecting the amount of PTA days determined by the recalculation.

Prior to the issuance of the certificate of correction, the USPTO will afford patentee an opportunity to be heard and request reconsideration. Accordingly, patentee has **one month or thirty (30) days**, whichever is longer, to file a request for reconsideration of this patent term adjustment calculation. See 35 U.S.C. 154(b)(3)(B)(ii) and 37 CFR 1.322(a)(4). No extensions of time will be granted under 37 CFR 1.136.

Patentee should use document code PET.OP if electronically filing a request for reconsideration of this patent term adjustment calculation. The patentee must also include the information required by 37 CFR 1.705(b)(2) and the fee required by 37 CFR 1.18(e). If patentee does not file a timely request for reconsideration of this patent term adjustment calculation including the information required by 37 CFR 1.705(b)(2) and the fee required by 37 CFR 1.18(e), the USPTO will issue a certificate of correction reflecting the PTA determination noted above.

Patentee should be aware that in order to preserve the right to review in the United States District Court for the District of Columbia of the USPTO patent term adjustment determination, patentee must ensure that he or she also take the steps required under 35 U.S.C. 154(b)(4)(A) in a timely manner. Nothing in the request for recalculation should be construed as providing an alternative time frame for commencing a civil action under 35 U.S.C. 154(b)(4)(A).

Any questions concerning this decision should be directed to the Office of Patent Legal Administration at 571-272-7702.

UNITED STATES PATENT AND TRADEMARK OFFICE

UNITED STATES DEPARTMENT OF COMMERCE
United States Patent and Trademark Office
Address: COMMISSIONER FOR PATENTS
P.O. Box 1450
Alexandria, Virginia 22313-1450
www.uspto.gov

MCDERMOTT WILL & EMERY LLP
600 13TH STREET, N.W.
WASHINGTON, DC 20005-3096

Mail Date: 04/21/2010

Applicant	: Shigeru Matsui	: DECISION ON REQUEST FOR
Patent Number	: 7602482	: RECALCULATION of PATENT
Issue Date	: 10/13/2009	: TERM ADJUSTMENT IN VIEW
Appliction No	: 11/798,805	: OF WYETH AND NOTICE OF INTENT TO
Filed	: 05/17/2007	: ISSUE CERTIFICATE OF CORRECTION
		:

The Request for Recalculation is **GRANTED** to the extent indicated.

The patent term adjustment has been determined to be **209** days. The USPTO will *sua sponte* issue a certificate of correction reflecting the amount of PTA days determined by the recalculation.

Prior to the issuance of the certificate of correction, the USPTO will afford patentee an opportunity to be heard and request reconsideration. Accordingly, patentee has **one month or thirty (30) days**, whichever is longer, to file a request for reconsideration of this patent term adjustment calculation. See 35 U.S.C. 154(b)(3)(B)(ii) and 37 CFR 1.322(a)(4). No extensions of time will be granted under 37 CFR 1.136.

Patentee should use document code PET.OP if electronically filing a request for reconsideration of this patent term adjustment calculation. The patentee must also include the information required by 37 CFR 1.705(b)(2) and the fee required by 37 CFR 1.18(e). If patentee does not file a timely request for reconsideration of this patent term adjustment calculation including the information required by 37 CFR 1.705(b)(2) and the fee required by 37 CFR 1.18(e), the USPTO will issue a certificate of correction reflecting the PTA determination noted above.

Patentee should be aware that in order to preserve the right to review in the United States District Court for the District of Columbia of the USPTO patent term adjustment determination, patentee must ensure that he or she also take the steps required under 35 U.S.C. 154(b)(4)(A) in a timely manner. Nothing in the request for recalculation should be construed as providing an alternative time frame for commencing a civil action under 35 U.S.C. 154(b)(4)(A).

Any questions concerning this decision should be directed to the Office of Patent Legal Administration at 571-272-7702.

UNITED STATES PATENT AND TRADEMARK OFFICE

UNITED STATES DEPARTMENT OF COMMERCE
United States Patent and Trademark Office
Address: COMMISSIONER FOR PATENTS
P.O. Box 1450
Alexandria, Virginia 22313-1450
www.uspto.gov

MCDERMOTT WILL & EMERY LLP
600 13TH STREET, N.W.
WASHINGTON, DC 20005-3096

Mail Date: 05/18/2010

Applicant : Shigeru Matsui
Patent Number : 7602482
Issue Date : 10/13/2009
Application No : 11/798,805
Filed : 05/17/2007

: NOTICE CONCERNING IMPROPER
: CALCULATION OF PATENT TERM
: ADJUSTMENT BASED UPON USPTO
: IMPROPERLY MEASURING REDUCTION
: PERIOD UNDER 37 CFR 1.704(c)(10).

The United States Patent and Trademark Office (USPTO) discovered that in processing the recent recalculation decisions mailed in response to patentee's filed Request for Recalculation of Patent Term Adjustment in view of Wyeth, the USPTO improperly measured the reduction period for reductions under 37 CFR 1.704(c)(10). Pursuant to 37 CFR 1.704(c)(10), patentee's reduction begins on the date of filing the amendment under 37 CFR 1.312 ("1.312 amendment") or other related paper and ends on the date that the Office mails a response to the filing of the 1.312 amendment or other paper. It has been discovered that during the recalculation, the calculation failed to the limit the reduction to the mail date of the response to the 1.312 amendment or other paper. Accordingly, patentee's reductions were greater than warranted.

This notice **VACATES** the previous GRANTED request for recalculation and provides patentee with a revised GRANTED recalculation.

The patent term adjustment has been determined to be **308** days. The USPTO will *sua sponte* issue a certificate of correction reflecting the amount of patent term adjustment (PTA) days determined by the recalculation.

Prior to the issuance of the certificate of correction, the USPTO will afford patentee an opportunity to be heard and request reconsideration. Accordingly, patentee has **one month or thirty (30) days** from the mail date of this notice, whichever is longer, to file a request for reconsideration of this PTA calculation. See 35 U.S.C. § 154(b)(3)(B)(ii) and 37 CFR 1.322(a)(4).

Patentee should use document code PET.OP if electronically filing a request for reconsideration of this PTA calculation. The patentee must also include the information required by 37 CFR 1.705(b)(2), and the fee required by 37 CFR 1.18(e). If patentee does not file a timely request for reconsideration of this PTA calculation, including the information required by 37 CFR 1.705(b)(2) and the fee required by 37 CFR 1.18(e), the USPTO will issue a certificate of correction reflecting the PTA determination noted above.

Patentee should be aware that in order to preserve the right of review of the USPTO's PTA determination in the United States District Court for the District of Columbia, patentee must ensure that the steps required under 35 U.S.C. § 154 (b)(4) are taken in a timely manner. Nothing in the request for recalculation should be construed as providing an alternative time frame for commencing a civil action under 35 U.S.C. § 154(b)(4).

UNITED STATES PATENT AND TRADEMARK OFFICE

Commissioner for Patents
United States Patent and Trademark Office
P.O. Box 1450
Alexandria, VA 22313-1450
www.uspto.gov

GOODWIN PROCTER L.L.P
ATTN: PATENT ADMINISTRATOR
620 EIGHTH AVENUE
NEW YORK NY 10018

COPY MAILED

AUG 2 7 2008

OFFICE OF PETITIONS

In re Application of
Moti SHNIBERG et al.
Application No. 11/179,814
Filed: June 12, 2005
Attorney Docket No. **104882-752-CON1**

DECISION ON PETITION

This is a decision on the petition under the unintentional provisions of 37 CFR 1.137(b), filed April 23, 2008, to revive the above-identified application.

The petition is **GRANTED**.

The application became abandoned for failure to timely file a reply within the meaning of 37 CFR 1.113 to the final Office action of September 14, 2007. The proposed reply required for consideration of a petition to revive must be a Notice of Appeal (and appeal fee required by 37 CFR 41.20(b)(2), an amendment that *prima facie* places the application in condition for allowance, a Request for Continued Examination and submission (37 CFR 1.114), or the filing of a continuing application under 37 CFR 1.53(b). See MPEP 711.03(c)(III)(A)(2). No extensions of time pursuant to the provisions of 37 CFR 1.136(a) were obtained. Accordingly, the date of abandonment of this application is December 15, 2007.

The petition satisfies the requirements of 37 CFR 1.137(b) in that petitioner has supplied (1) the reply in the form of a Request for Continued Examination (RCE) and fee of $405, and the submission required by 37 CFR 1.114; (2) the petition fee of $770; and (3) a proper statement of unintentional delay. Accordingly, the reply to the final Office Action of September 17, 2007 is accepted as having been unintentionally delayed.

37 CFR 1.137(b)(3) requires a statement that "the entire delay in filing the required reply from the due date for the reply until the filing of a grantable petition pursuant to 37 CFR 1.137(b) was unintentional." Since the statement appearing in the petition varies from the language required by 37 CFR 1.137(b)(3), the statement is being construed as the required statement. Petitioner must notify the Office if this is not a correct reading of the statement appearing in the petition.

It is not apparent whether the person signing the statement of unintentional delay was in a position to have firsthand or direct knowledge of the facts and circumstances of the delay at issue. Nevertheless, such statement is being treated as having been made as the result of a reasonable inquiry into the facts and circumstances of such delay. See 37 CFR 10.18(b) and Changes to Patent Practice and Procedure; Final Rule Notice, 62 Fed. Reg. 53131, 53178 (October 10, 1997), 1203 Off. Gaz. Pat. Office 63, 103 (October 21, 1997). In the event that such an inquiry has not been made, petitioner must make such an inquiry. If such inquiry results in the discovery that it is not correct that the entire delay in filing the required reply from the due date for the reply until the filing of a grantable petition pursuant to 37 CFR 1.137(b) was unintentional, petitioner must notify the Office.

An extension of time under 37 CFR 1.136 must be filed prior to the expiration of the maximum extendable period for reply. See In re Application of S., 8 USPQ2d 1630, 1631 (Comm'r Pats. 1988). Since the $525 extension of time fee submitted with the petition on April 23, 2008 was subsequent to the maximum extendable period for reply, this fee is unnecessary and will be applied towards the petition fee and the balance of $245 will be charged to the deposit account 06-0923, as authorized in the instant petition.

Telephone inquiries concerning this decision should be directed to Tredelle Jackson at (571) 272-2783.

This application is being referred to Technology Center AU 2612 for processing of the RCE and for appropriate action by the Examiner in the normal course of business on the amendment submitted in accordance with 37 CFR 1.114.

Ramesh Krishnamurthy

Ramesh Krishnamurthy
Petitions Examiner
Office of Petitions

cc: **GOODWIN PROCTER L.L.P**
599 LEXINGTON AVENUE
NEW YORK NY 10022

UNITED STATES PATENT AND TRADEMARK OFFICE

Commissioner for Patents
United States Patent and Trademark Office
P.O. Box 1450
Alexandria, VA 22313-1450
www.uspto.gov

MAILED

FEB 25 2010

OFFICE OF PETITIONS

PAUL, HASTINGS, JANOFSKY & WALKER LLP
875 15TH STREET, NW
WASHINGTON, DC 20005

In re Application of David Taggart Application No. 11/798,823 Filed: May 17, 2007 Attorney Docket No. **HCI0002-CON3**	DECISION ON PETITION TO WITHDRAW FROM RECORD

This is a decision on the Request to Withdraw as attorney or agent of record under 37 CFR. § 1.36(b), filed October 28, 2009.

The request is **NOT APPROVED** as moot.

A review of the file record indicates that the power of attorney to attorneys/agents associated with Customer Number 36183 has been revoked by the applicants of the patent application on November 9, 2009. Accordingly, the request to withdraw under 37 CFR § 1.36(b) is moot.

All future communications from the Office will continue to be directed to the below-listed address until otherwise notified by applicant.

Telephone inquires concerning this decision should be directed to the undersigned at 571-272-4584.

JoAnne Burke
Petitions Examiner
Office of Petitions

cc: Plumsea Law Group, LLC
10411 Motor City Drive
Suite 320
Bethesda MD 20817

UNITED STATES PATENT AND TRADEMARK OFFICE

Commissioner for Patents
United States Patent and Trademark Office
P.O. Box 1450
Alexandria, VA 22313-1450
www.uspto.gov

OLIFF & BERRIDGE, PLC
P.O. BOX 320850
ALEXANDRIA VA 22320-4850

MAILED
JUN 18 2010
OFFICE OF PETITIONS

In re Application of	:	
Tsutomu WAKABAYASHI	:	
Application No. 11/798,892	:	DECISION ON PETITION
Filed: May 17, 2007	:	
Attorney Docket No. 132581	:	

This is a decision on the petition, filed January 08, 2010, which is being treated as a petition under 37 CFR 1.8(b) (no fee), requesting withdrawal of the holding of abandonment in the above-identified application.

The petition under 37 CFR 1.8(b) is **GRANTED**.

The application became abandoned for failure to reply in a timely manner to the non-final Office action mailed, June 17, 2009, which set a shortened statutory period for reply of three (3) months. Accordingly, the application became abandoned on September 18 2009.

Petitioner asserts that the abandonment be withdrawn as a response with an extension of time was timely filed. Petitioner has submitted a copy of a PTO Receipt with a date-stamped of December 17, 2009.

A review of the Office records indicates that the response was timely filed with a three (3) month extension of time on December 17, 2009, which makes the reply timely filed.

Telephone inquiries concerning this decision should be directed to Michelle R. Eason at (571) 272-4231.

The application file is being referred to Technology Center AU 2862 for appropriate action on the amendment.

Thurman K Page

Thurman K. Page
Petitions Examiner
Office of Petitions

UNITED STATES PATENT AND TRADEMARK OFFICE

Commissioner for Patents
United States Patent and Trademark Office
P.O. Box 1450
Alexandria, VA 22313-1450
www.uspto.gov

LITMAN LAW OFFICES, LTD.
P.O. BOX 15035
CRYSTAL CITY STATION
ARLINGTON, VA 22215

COPY MAILED

DEC 14 2007

OFFICE OF PETITIONS

In re Application of

David J. MORRISON
Application No. 11/798,896
Filed: May 17, 2007
Attorney Docket No. 17433.10

DECISION ON PETITION
TO MAKE SPECIAL UNDER
37 CFR 1.102(c)(1)

This is a decision on the petition under 37 CFR 1.102(c)(1), filed May 17, 2007, to make the above-identified application special based on applicant's age as set forth in M.P.E.P. § 708.02, Section IV.

The petition is **GRANTED**.

A grantable petition to make an application special under 37 CFR 1.102(c)(1) and MPEP § 708.02, Section IV: Applicant's Age must be accompanied by evidence showing that at least one of the applicants is 65 years of age, or more, such as a birth certificate or a statement by applicant. No fee is required .

The instant petition includes a statement signed by the applicant. Accordingly, the above-identified application has been accorded "special" status.

Telephone inquiries concerning this decision should be directed to the undersigned at 571-272-6735.

All other inquiries concerning either the examination or status of the application should be directed to the Technology Center.

The application is being forwarded to the Technology Center Art Unit 3632 for action on the merits commensurate with this decision.

Diane Goodwyn
Petitions Examiner
Office of Petitions

UNITED STATES PATENT AND TRADEMARK OFFICE

UNITED STATES DEPARTMENT OF COMMERCE
United States Patent and Trademark Office
Address: COMMISSIONER FOR PATENTS
P.O. Box 1450
Alexandria, Virginia 22313-1450
www.uspto.gov

APPLICATION NO.	FILING DATE	FIRST NAMED INVENTOR	ATTORNEY DOCKET NO.	CONFIRMATION NO.
11/798,924	05/17/2007	Andrew David Abell	P71910US0	7919

7590 03/16/2009
JACOBSON HOLMAN PLLC
400 SEVENTH STREET N.W.
SUITE 600
WASHINGTON, DC 20004

EXAMINER
NOLAN, JASON MICHAEL

ART UNIT	PAPER NUMBER
1626	

MAIL DATE	DELIVERY MODE
03/16/2009	PAPER

DECISION GRANTING PETITION UNDER 37 CFR 1.138(d)

The declaration of express abandonment is recognized

This is in response to the petition under 37 CFR 1.138(d), requesting for a refund of any previously paid search fee and excess claims fee in the above-identified application.

The petition is granted.

The express abandonment is recognized. Any previously paid search fee and excess claims fee are hereby refunded.

Telephone inquiries should be directed to the Office of Data Management at (571) 272-4200.

Betty Powell

Patent Publication Branch
Office of Data Management

Adjustment date: 03/17/2009 BPOWELL
08/29/2007 MAHMED1 00000078 11798924
02 FC:1111 -500.00 OP

Adjustment date: 03/17/2009 BPOWELL
08/29/2007 MAHMED1 00000078 11798924
02 FC:1111 -500.00 OP

FORM PET651G (Rev. 08/07)

UNITED STATES PATENT AND TRADEMARK OFFICE

UNITED STATES DEPARTMENT OF COMMERCE
United States Patent and Trademark Office
Address: COMMISSIONER FOR PATENTS
P.O. Box 1450
Alexandria, Virginia 22313-1450
www.uspto.gov

APPLICATION NO.	FILING DATE	FIRST NAMED INVENTOR	ATTORNEY DOCKET NO.	CONFIRMATION NO.
11/798,957	05/18/2007	Eiji Watanabe	07057.0147	7663

22852 7590 11/18/2008
FINNEGAN, HENDERSON, FARABOW, GARRETT & DUNNER LLP
901 NEW YORK AVENUE, NW
WASHINGTON, DC 20001-4413

EXAMINER
EDELL, JOSEPH F

ART UNIT	PAPER NUMBER
3636	

MAIL DATE	DELIVERY MODE
11/18/2008	PAPER

Please find below and/or attached an Office communication concerning this application or proceeding.

The time period for reply, if any, is set in the attached communication.

UNITED STATES PATENT AND TRADEMARK OFFICE

Commissioner for Patents
United States Patent and Trademark Office
P.O. Box 1450
Alexandria, VA 22313-1450
www.uspto.gov

NOV 17 2008

Finnegan, Henderson, Farabow, Garrett & Dunner, LLP
901 New York Avenue, NW
Washington, DC 20001-4413

In re application of Eiji Watanabe Application No. 11/798,957 Filed: May 18, 2007 For: HEADREST MECHANISM	**DECISION ON REQUEST TO PARTICIPATE IN PATENT PROSECUTION HIGHWAY PROGRAM AND PETITION TO MAKE SPECIAL UNDER 37 CFR 1.102(d)**

This is a decision on the request to participate in the Patent Prosecution Highway (PPH) program and the petition under 37 CFR 1.102(d), filed November 12, 2008, to make the above-identified application special.

The request and petition are **DISMISSED**.

A grantable request to participate in the PPH pilot program and petition to make special require:

(1) The U.S. application must validly claim priority under 35 U.S.C. 119(a) to one or more applications filed in the JPO;
(2) Applicant must submit a copy of the allowable/patentable claim(s) from the JPO application(s) along with an English translation thereof and a statement that the English translation is accurate;
(3) All the claims in the U.S. application must sufficiently correspond or be amended to sufficiently correspond to the allowable/patentable claim(s) in the JPO application(s);
(4) Examination of the U.S. application has not begun;
(5) Applicant must submit a copy of the latest Office action from each of the JPO application(s) containing the allowable/patentable claim(s) along with an English translation thereof and a statement that the English translation is accurate;
(6) Applicant must submit an IDS listing the documents cited by the JPO examiner in the JPO Office action along with copies of documents except U.S. patents or U.S. patent application publications; and
(7) The required petition fee under 37 CFR 1.17(h).

The request to participate in the PPH pilot program and petition fail to include:
(3) Claims of the U.S. Application that sufficiently correspond to the allowable claims of the JPO application. Specifically, in claim 1, "an engagement member" does not correspond with being "engagement means", resulting in a change in scope from that of the allowed Japanese claims. Also, because claims 5-17 have no equivalent claims in the Japanese patent, they likewise do not correspond to any of the Japanese patent claims.

Applicant is given a time period of **ONE MONTH or THIRTY DAYS**, whichever is longer, to correct the deficiencies. **NO EXTENSION OF TIME UNDER 37 CFR 1.136 IS PERMITTED.** If the deficiencies are not corrected with the time period given, the application will await action in its regular turn. All replies to a decision to dismiss must be submitted by EFS-Web using the document description "Petition to make special under Patent Prosecution Highway."

Any inquiry regarding this decision should be directed to Steven N. Meyers, Quality Assurance Specialist, at (571) 272-6611.

Steven N. Meyers,
Quality Assurance Specialist
Technology Center 3600

Sm/sm: 11/17/08

UNITED STATES PATENT AND TRADEMARK OFFICE

UNITED STATES DEPARTMENT OF COMMERCE
United States Patent and Trademark Office
Address: COMMISSIONER FOR PATENTS
P.O. Box 1450
Alexandria, Virginia 22313-1450
www.uspto.gov

PATTON BOGGS LLP
8484 WESTPARK DRIVE
SUITE 900
MCLEAN, VA 22102

Mail Date: 04/21/2010

Applicant	: Lutz Freitag	: DECISION ON REQUEST FOR
Patent Number	: 7631642	: RECALCULATION of PATENT
Issue Date	: 12/15/2009	: TERM ADJUSTMENT IN VIEW
Appliction No	: 11/798,965	: OF WYETH AND NOTICE OF INTENT TO
Filed	: 05/18/2007	: ISSUE CERTIFICATE OF CORRECTION
		:

The Request for Recalculation is **GRANTED** to the extent indicated.

The patent term adjustment has been determined to be **0** days. The USPTO will *sua sponte* issue a certificate of correction reflecting the amount of PTA days determined by the recalculation.

Prior to the issuance of the certificate of correction, the USPTO will afford patentee an opportunity to be heard and request reconsideration. Accordingly, patentee has **one month or thirty (30) days**, whichever is longer, to file a request for reconsideration of this patent term adjustment calculation. See 35 U.S.C. 154(b)(3)(B)(ii) and 37 CFR 1.322(a)(4). No extensions of time will be granted under 37 CFR 1.136.

Patentee should use document code PET.OP if electronically filing a request for reconsideration of this patent term adjustment calculation. The patentee must also include the information required by 37 CFR 1.705(b)(2) and the fee required by 37 CFR 1.18(e). If patentee does not file a timely request for reconsideration of this patent term adjustment calculation including the information required by 37 CFR 1.705(b)(2) and the fee required by 37 CFR 1.18(e), the USPTO will issue a certificate of correction reflecting the PTA determination noted above.

Patentee should be aware that in order to preserve the right to review in the United States District Court for the District of Columbia of the USPTO patent term adjustment determination, patentee must ensure that he or she also take the steps required under 35 U.S.C. 154(b)(4)(A) in a timely manner. Nothing in the request for recalculation should be construed as providing an alternative time frame for commencing a civil action under 35 U.S.C. 154(b)(4)(A).

Any questions concerning this decision should be directed to the Office of Patent Legal Administration at 571-272-7702.

UNITED STATES PATENT AND TRADEMARK OFFICE

Commissioner for Patents
United States Patent and Trademark Office
P.O. Box 1450
Alexandria, VA 22313-1450
www.uspto.gov

CHARLES A. DALEY III
P.O. BOX 184
KARON PO
TIKARON A. MUANG 83100 TH THAILAND

COPY MAILED

DEC 22 2009

OFFICE OF PETITIONS

In re Application of	:	
Charles A. Daley III	:	
Application No. 11/799,011	:	DECISION ON PETITION
Filed: May 1, 2007	:	TO WITHDRAW
Attorney Docket No.	:	FROM RECORD
	:	

This is a decision on the Request to Withdraw as attorney or agent under 37 C.F.R. § 1.36(b) or 37 C.F.R. § 10.40 filed October 26, 2009.

The request is **APPROVED**.

A review of the file record indicates that Ted Masters: (1) does not have power of attorney in this patent application; and (2) has been employed or otherwise engaged in the proceedings in this patent application. In view of the present decision, Ted Masters has been withdrawn from the present application and may not prepare or submit papers under 37 C.F.R. § 1.34, or correspond in any manner in this application unless appointed in an acceptable power of attorney under 37 C.F.R. § 1.32(b).

Telephone inquires concerning this decision should be directed to Irvin Dingle at 571-272-3210.

Irvin Dingle
Petitions Examiner
Office of Petitions

cc: Ted Masters
5121 Spicewood Dr.
Charlotte, NC 28227

UNITED STATES PATENT AND TRADEMARK OFFICE

UNITED STATES DEPARTMENT OF COMMERCE
United States Patent and Trademark Office
Address: COMMISSIONER FOR PATENTS
P.O. Box 1450
Alexandria, Virginia 22313-1450
www.uspto.gov

LAURENCE A WEINBERGER, ESQ.
429 EXTON COMMONS
EXTON, PA 19341

Mail Date: 04/21/2010

Applicant	: Edmond Abrahamian	: DECISION ON REQUEST FOR
Patent Number	: 7580799	: RECALCULATION of PATENT
Issue Date	: 08/25/2009	: TERM ADJUSTMENT IN VIEW
Appliction No	: 11/799,037	: OF WYETH AND NOTICE OF INTENT TO
Filed	: 04/30/2007	: ISSUE CERTIFICATE OF CORRECTION
		:

The Request for Recalculation is **GRANTED** to the extent indicated.

The patent term adjustment has been determined to be **174** days. The USPTO will *sua sponte* issue a certificate of correction reflecting the amount of PTA days determined by the recalculation.

Prior to the issuance of the certificate of correction, the USPTO will afford patentee an opportunity to be heard and request reconsideration. Accordingly, patentee has **one month or thirty (30) days**, whichever is longer, to file a request for reconsideration of this patent term adjustment calculation. See 35 U.S.C. 154(b)(3)(B)(ii) and 37 CFR 1.322(a)(4). No extensions of time will be granted under 37 CFR 1.136.

Patentee should use document code PET.OP if electronically filing a request for reconsideration of this patent term adjustment calculation. The patentee must also include the information required by 37 CFR 1.705(b)(2) and the fee required by 37 CFR 1.18(e). If patentee does not file a timely request for reconsideration of this patent term adjustment calculation including the information required by 37 CFR 1.705(b)(2) and the fee required by 37 CFR 1.18(e), the USPTO will issue a certificate of correction reflecting the PTA determination noted above.

Patentee should be aware that in order to preserve the right to review in the United States District Court for the District of Columbia of the USPTO patent term adjustment determination, patentee must ensure that he or she also take the steps required under 35 U.S.C. 154(b)(4)(A) in a timely manner. Nothing in the request for recalculation should be construed as providing an alternative time frame for commencing a civil action under 35 U.S.C. 154(b)(4)(A).

Any questions concerning this decision should be directed to the Office of Patent Legal Administration at 571-272-7702.

UNITED STATES PATENT AND TRADEMARK OFFICE

UNITED STATES DEPARTMENT OF COMMERCE
United States Patent and Trademark Office
Address: COMMISSIONER FOR PATENTS
P.O. Box 1450
Alexandria, Virginia 22313-1450
www.uspto.gov

LAURENCE A WEINBERGER, ESQ.
429 EXTON COMMONS
EXTON, PA 19341

Mail Date: 05/18/2010

Applicant : Edmond Abrahamian
Patent Number : 7580799
Issue Date : 08/25/2009
Application No : 11/799,037
Filed : 04/30/2007

: NOTICE CONCERNING IMPROPER
: CALCULATION OF PATENT TERM
: ADJUSTMENT BASED UPON USPTO
: IMPROPERLY MEASURING REDUCTION
: PERIOD UNDER 37 CFR 1.704(c)(10).

The United States Patent and Trademark Office (USPTO) discovered that in processing the recent recalculation decisions mailed in response to patentee's filed Request for Recalculation of Patent Term Adjustment in view of Wyeth, the USPTO improperly measured the reduction period for reductions under 37 CFR 1.704(c)(10). Pursuant to 37 CFR 1.704(c)(10), patentee's reduction begins on the date of filing the amendment under 37 CFR 1.312 ("1.312 amendment") or other related paper and ends on the date that the Office mails a response to the filing of the 1.312 amendment or other paper. It has been discovered that during the recalculation, the calculation failed to the limit the reduction to the mail date of the response to the 1.312 amendment or other paper. Accordingly, patentee's reductions were greater than warranted.

This notice **VACATES** the previous GRANTED request for recalculation and provides patentee with a revised GRANTED recalculation.

The patent term adjustment has been determined to be **207** days. The USPTO will *sua sponte* issue a certificate of correction reflecting the amount of patent term adjustment (PTA) days determined by the recalculation.

Prior to the issuance of the certificate of correction, the USPTO will afford patentee an opportunity to be heard and request reconsideration. Accordingly, patentee has **one month or thirty (30) days** from the mail date of this notice, whichever is longer, to file a request for reconsideration of this PTA calculation. See 35 U.S.C. § 154(b)(3)(B)(ii) and 37 CFR 1.322(a)(4).

Patentee should use document code PET.OP if electronically filing a request for reconsideration of this PTA calculation. The patentee must also include the information required by 37 CFR 1.705(b)(2), and the fee required by 37 CFR 1.18(e). If patentee does not file a timely request for reconsideration of this PTA calculation, including the information required by 37 CFR 1.705(b)(2) and the fee required by 37 CFR 1.18(e), the USPTO will issue a certificate of correction reflecting the PTA determination noted above.

Patentee should be aware that in order to preserve the right of review of the USPTO's PTA determination in the United States District Court for the District of Columbia, patentee must ensure that the steps required under 35 U.S.C. § 154 (b)(4) are taken in a timely manner. Nothing in the request for recalculation should be construed as providing an alternative time frame for commencing a civil action under 35 U.S.C. § 154(b)(4).

UNITED STATES PATENT AND TRADEMARK OFFICE

UNITED STATES DEPARTMENT OF COMMERCE
United States Patent and Trademark Office
Address: COMMISSIONER FOR PATENTS
P.O. Box 1450
Alexandria, Virginia 22313-1450
www.uspto.gov

DORITY & MANNING, P.A.
POST OFFICE BOX 1449
GREENVILLE, SC 29602-1449

Mail Date: 04/21/2010

Applicant	: Thomas M. Ales	: DECISION ON REQUEST FOR
Patent Number	: 7667608	: RECALCULATION of PATENT
Issue Date	: 02/23/2010	: TERM ADJUSTMENT IN VIEW
Appliction No	: 11/799,046	: OF WYETH AND NOTICE OF INTENT TO
Filed	: 04/30/2007	: ISSUE CERTIFICATE OF CORRECTION
		:

The Request for Recalculation is **GRANTED** to the extent indicated.

The patent term adjustment has been determined to be **262** days. The USPTO will *sua sponte* issue a certificate of correction reflecting the amount of PTA days determined by the recalculation.

Prior to the issuance of the certificate of correction, the USPTO will afford patentee an opportunity to be heard and request reconsideration. Accordingly, patentee has **one month or thirty (30) days**, whichever is longer, to file a request for reconsideration of this patent term adjustment calculation. See 35 U.S.C. 154(b)(3)(B)(ii) and 37 CFR 1.322(a)(4). No extensions of time will be granted under 37 CFR 1.136.

Patentee should use document code PET.OP if electronically filing a request for reconsideration of this patent term adjustment calculation. The patentee must also include the information required by 37 CFR 1.705(b)(2) and the fee required by 37 CFR 1.18(e). If patentee does not file a timely request for reconsideration of this patent term adjustment calculation including the information required by 37 CFR 1.705(b)(2) and the fee required by 37 CFR 1.18(e), the USPTO will issue a certificate of correction reflecting the PTA determination noted above.

Patentee should be aware that in order to preserve the right to review in the United States District Court for the District of Columbia of the USPTO patent term adjustment determination, patentee must ensure that he or she also take the steps required under 35 U.S.C. 154(b)(4)(A) in a timely manner. Nothing in the request for recalculation should be construed as providing an alternative time frame for commencing a civil action under 35 U.S.C. 154(b)(4)(A).

Any questions concerning this decision should be directed to the Office of Patent Legal Administration at 571-272-7702.

UNITED STATES PATENT AND TRADEMARK OFFICE

Commissioner for Patents
United States Patent and Trademark Office
P.O. Box 1450
Alexandria, VA 22313-1450
www.uspto.gov

THOMAS A. O'ROURKE
BODNER & O'ROURKE
425 BROADHOLLOW ROAD
MELVILLE, NY 11747

COPY MAILED

APR 16 2008

OFFICE OF PETITIONS

In re Application of :
Miriam Rafailovich et al :
Application No. 11/799,049 : ON PETITION
Filed: April 30, 2007 :
Attorney Docket No. :

This is a decision on the petition under 37 CFR 1.137(b), filed November 19, 2007 to revive the above-identified application.

The petition is **DISMISSED.**

Any request for reconsideration of this decision must be submitted within TWO (2) MONTHS from the mail date of this decision. Extensions of time under 37 CFR 1.136(a) are permitted. The reconsideration request should include a cover letter entitled "Renewed Petition under 37 CFR 1.137(b)." This is not final agency action within the meaning of 5 U.S.C. § 704.

The above-identified application became abandoned for failure to reply in a timely manner to the Notice of Missing Requirements (Notice) mailed May 25, 2007. The Notice set a period for reply of two (2) months from the mail date of the Notice. No extension of time under the provisions of 37 CFR 1.136(a) were obtained. Accordingly, the above-identified application became abandoned on July 26, 2007.

A grantable petition under 37 CFR 1.137(b) must be accompanied by: (1) the required reply, unless previously filed; (2) the petition fee as set forth in 37 CFR 1.17(m); (3) a statement that the entire delay in filing the required reply from the due date for the reply until the filing of a grantable petition pursuant to 37 CFR 1.137(b) was unintentional; and (4) any terminal disclaimer (and fee as set forth in 37 CFR 1.20(d)) required by 37 CFR 1.137(c). Where there is a question as to whether either the abandonment or the delay in filing a petition under 37 CFR 1.137 was unintentional, the Commissioner may require additional information. See MPEP 711.03(c)(III)(C) and (D). The instant petition lack(s) item(s) (1) and (2).

The USPTO records show that this case is non-small entity. Petitioner submitted fees at the small entity rate. Therefore, this petition can not be revive until the outstanding balance (for non-small entity) is received. Enclosed is a courtesy copy of the Notice to File Missing Parts of Nonprovisional Application mailed May 25, 2007.

Further correspondence with respect to this matter should be addressed as follows:

By mail: Mail Stop PETITION
Commissioner for Patents
Post Office Box 1450
Alexandria, VA 22313-1450

By hand: Customer Service Window
Randolph Building
401 Dulany Street
Alexandria, VA 22314

By facsimile: (571) 273-8300
ATTN: Office of Petitions

Telephone inquiries concerning this decision should be directed to the undersigned at (571) 272-3210.

Irvin Dingle
Petitions Examiner
Office of Petitions

Attachment: courtesy copy of the Notice to File Missing Parts of Nonprovisional Application mailed May 25, 2007

UNITED STATES PATENT AND TRADEMARK OFFICE

UNITED STATES DEPARTMENT OF COMMERCE
United States Patent and Trademark Office
Address: COMMISSIONER FOR PATENTS
P.O. Box 1450
Alexandria, Virginia 22313-1450
www.uspto.gov

APPLICATION NUMBER	FILING OR 371 (c) DATE	FIRST NAMED APPLICANT	ATTORNEY DOCKET NUMBER
11/799,049	04/30/2007	Miriam Rafailovich	

CONFIRMATION NO. 4005

FORMALITIES LETTER

Thomas A. O'Rourke
Bodner & O'Rourke
425 Broadhollow Road
Melville, NY 11747

Date Mailed: 05/25/2007

NOTICE TO FILE MISSING PARTS OF NONPROVISIONAL APPLICATION

FILED UNDER 37 CFR 1.53(b)

Filing Date Granted

Items Required To Avoid Abandonment:

An application number and filing date have been accorded to this application. The item(s) indicated below, however, are missing. Applicant is given **TWO MONTHS** from the date of this Notice within which to file all required items and pay any fees required below to avoid abandonment. Extensions of time may be obtained by filing a petition accompanied by the extension fee under the provisions of 37 CFR 1.136(a).

- The statutory basic filing fee is missing.
  Applicant must submit $ **300** *to complete the basic filing fee for a non-small entity. If appropriate, applicant may make a written assertion of entitlement to small entity status and pay the small entity filing fee (37 CFR 1.27).*
- The oath or declaration is missing. *A properly signed oath or declaration in compliance with 37 CFR 1.63, identifying the application by the above Application Number and Filing Date, is required.*
  Note: If a petition under 37 CFR 1.47 is being filed, an oath or declaration in compliance with 37 CFR 1.63 signed by all available joint inventors, or if no inventor is available by a party with sufficient proprietary interest, is required.

The applicant needs to satisfy supplemental fees problems indicated below.

The required item(s) identified below must be timely submitted to avoid abandonment:

- Additional claim fees of **$800** as a non-small entity, including any required multiple dependent claim fee, are required. Applicant must submit the additional claim fees or cancel the additional claims for which fees are due.
- To avoid abandonment, a surcharge (for late submission of filing fee, search fee, examination fee or oath or declaration) as set forth in 37 CFR 1.16(f) of $130 for a non-small entity, must be submitted with the missing items identified in this letter.

SUMMARY OF FEES DUE:

Total additional fee(s) required for this application is **$1930** for a non-small entity

- **$300** Statutory basic filing fee.
- **$130** Surcharge.

- The application search fee has not been paid. Applicant must submit **$500** to complete the search fee.
- The application examination fee has not been paid. Applicant must submit **$200** to complete the examination fee for a non-small entity.

- Total additional claim fee(s) for this application is **$800**

  - **$800** for **16** total claims over 20.

Replies should be mailed to: Mail Stop Missing Parts
Commissioner for Patents
P.O. Box 1450
Alexandria VA 22313-1450

Registered users of EFS-Web may alternatively submit their reply to this notice via EFS-Web.
https://sportal.uspto.gov/authenticate/AuthenticateUserLocalEPF.html

For more information about EFS-Web please call the USPTO Electronic Business Center at **1-866-217-9197** or visit our website at http://www.uspto.gov/ebc.

If you are not using EFS-Web to submit your reply, you must include a copy of this notice.

Donald E. Cooper

Office of Initial Patent Examination (571) 272-4000, or 1-800-PTO-9199
PART 3 - OFFICE COPY

UNITED STATES PATENT AND TRADEMARK OFFICE

Commissioner for Patents
United States Patent and Trademark Office
P.O. Box 1450
Alexandria, VA 22313-1450
www.uspto.gov

THOMAS A. O'ROURKE
BODNER & O'ROURKE
425 BROADHOLLOW ROAD
MELVILLE, NY 11747

COPY MAILED

MAY 0 2 2008

OFFICE OF PETITIONS

In re Application of	:	
Miriam Rafailovich et al	:	
Application No. 11/799,049	:	ON PETITION
Filed: April 30, 2007	:	
Attorney Docket No.	:	

CORRECTED DECISION

This is a decision on the petition under 37 CFR 1.137(b), filed November 19, 2007, to revive the above-identified application.

The petition is **GRANTED.**

The above-identified application became abandoned for failure to reply in a timely manner to the Notice of Missing Requirements (Notice) mailed May 25, 2007. The Notice set a period for reply of two (2) months from the mail date of the Notice. No extension of time under the provisions of 37 CFR 1.136(a) were obtained. Accordingly, the above-identified application became abandoned on July 26, 2007.

The decision mailed April 16, 2008 is hereby vacated as of the mail date of this decision.

Telephone inquiries concerning this decision should be directed to Irvin Dingle at (571) 272-3210.

This matter is being referred to the Office of Patent Application Processing.

Irvin Dingle
Petitions Examiner
Office of Petitions

01-16-09

C of C

OIPE IAP13 JAN 15 2009 PATENT & TRADEMARK OFFICE

11799080

23871

Certificate of Express or First-Class Mailing

I hereby certify that I have deposited this correspondence with the US Postal Service as first-class or, if a mailing-label number is given below, as express mail addressed to Comm. of Patents, Box 1450, Alexandria, VA 22313-1450 on the below-given date.

JAN 15 2009
Date

EM130045105
Express mail label number

Signature

IN THE U.S. PATENT AND TRADEMARK OFFICE

Inventor	Ralf Monkemoller
Patent No.	7,461,540
Issued	9 December 2008
For	METAL-OXIDE GAS SENSOR

Mail Stop PETITIONS
Commissioner for Patents
Post Office Box 1450
Alexandria, VA 22313-1450

TRANSMITTAL LETTER

In the above-mentioned Letters Patent, the name of the assignee was omitted. Please add the following:

- - Assignee: Paragon AG, Delbruck (DE) - -

It is therefore respectfully requested that the Letters Patent be corrected, and a new Letters Patent be issued. This petition is filed without a fee, as the originally submitted papers were correct. (Please see attached supporting documentation.)

If this request is granted, please forward it to the Certificates of Correction Branch, for issuance of a Certificate of Correction.

Respectfully submitted,
KF Ross PC

By: Andrew Wilford, 26,597
Attorney for Applicant

5 January 2009
5683 Riverdale Avenue Box 900
Bronx, NY 10471-0900
Cust. No.: 535
Tel: (718) 884-6600
Fax: (718) 601-1099

pf
Enclosure: PTO SB/44 (Also PTO form 1050) Certificate of Correction
PTOL-85 (Issue Fee)

Certificate of Express or First-Class Mailing

I hereby certify that I have deposited this correspondence with the US Postal Service as first-class or, if a mailing-label number is given below, as express mail addressed to Comm. of Patents, Box 1450, Alexandria, VA 22313-1450 on the below-given date.

23871

Date

Express-mail label number

Signature

PTO/SB/44

(Also Form PTO-1050)

UNITED STATES PATENT AND TRADEMARK OFFICE
CERTIFICATE OF CORRECTION

PATENT NO: 7,461,540
DATED : 9 December 2008
INVENTOR : Ralf MONKEMOLLER

It is certified that an error appears in the above-identified patent and that said Letters Patent is hereby corrected as shown below:

The name of the assignee was omitted. Please add:

- - Assignee: Paragon AG, Delbruck, (DE)

Andrew Wilford, 26,597

5 January 2009

Mailing address of sender:

Patent No. 7,461,540

KF Ross PC
Customer Number 535
5683 Riverdale Avenue Box 900
Riverdale (Bronx), NY 10471-0900

UNITED STATES PATENT AND TRADEMARK OFFICE

Commissioner for Patents
United States Patent and Trademark Office
P.O. Box 1450
Alexandria, VA 22313-1450
www.uspto.gov

COPY MAILED

AUG 03 2009

OFFICE OF PETITIONS

HARMAN – BRINKS HOFER CHICAGO
BRINKS HOFER GILSON & LIONE
P.O. BOX 10395
CHICAGO, IL 60610

In re Application of	:	
Tim Haulick et al	:	
Application No. 11/799,105	:	DECISION ON PETITION
Filed: April 30, 2007	:	TO WITHDRAW
Attorney Docket No. 11336-1596 (P06049US)	:	FROM RECORD
	:	

This is a decision on the Request to Withdraw as attorney or agent of record under 37 C.F.R. § 1.36(b), filed June 15, 2009.

The request is **APPROVED**.

The request was signed by John F. Nethery on behalf of all attorneys of record who are associated with customer No. 81166.

Applicant is reminded that there is no attorney of record at this time.

The request to change the correspondence of record is not acceptable as the requested correspondence address is not that of: (1) the first named signing inventor; or (2) an intervening assignee of the entire interest under 37 C.F.R 3.71. All future communications from the Office will be directed to the first named signing inventor or the assignee of the entire interest at the first copied address below until otherwise properly notified by the applicant.

Telephone inquiries concerning this decision should be directed to Irvin Dingle at (571) 272-3210.

Irvin Dingle
Petitions Examiner
Office of Petitions

cc: Tim Haulick
In den Schlosswiesen 14,89143
Blaubeuren, Germany

cc: Robert P. Hart
Harman International Industries, Incorporated
8500 Balboa Boulevard
Northridge, CA 91329

UNITED STATES PATENT AND TRADEMARK OFFICE

Commissioner for Patents
United States Patent and Trademark Office
P.O. Box 1450
Alexandria, VA 22313-1450
www.uspto.gov

COPY MAILED

SEP 18 2007

OFFICE OF PETITIONS

HECTOR FRANCO
999-A LA MESA TERRACE
SUNNYVALE CA 94086

In re Application of

Hector FRANCO
Application No. 11/799,168
Filed: May 1, 2007
Attorney Docket No. HFRANCO006A

DECISION ON PETITION
TO MAKE SPECIAL UNDER
37 CFR 1.102(c)(1)

This is a decision on the petition under 37 CFR 1.102(c)(1), filed May 1, 2007, to make the above-identified application special based on applicant's age as set forth in M.P.E.P. § 708.02, Section IV.

The petition is **GRANTED**.

A grantable petition to make an application special under 37 CFR 1.102(c)(1) and MPEP § 708.02, Section IV: Applicant's Age must be accompanied by evidence showing that at least one of the applicants is 65 years of age, or more, such as a birth certificate or a statement by applicant. No fee is required

The instant petition includes a copy of applicant's driver license. Accordingly, the above-identified application has been accorded "special" status.

Telephone inquiries concerning this decision should be directed to Diane Goodwyn at 571-272-6735.

This application is being referred to the Office Initial Patent Examination for processing. This application will be accorded "special" status when pre-examination processing is done.

Diane Goodwyn
Petitions Examiner
Office of Petitions

UNITED STATES PATENT AND TRADEMARK OFFICE

Commissioner for Patents
United States Patent and Trademark Office
P.O. Box 1450
Alexandria, VA 22313-1450
www.uspto.gov

MAYER & WILLIAMS PC
251 NORTH AVENUE WEST
2ND FLOOR
WESTFIELD NJ 07090

MAILED

JUL 14 2009

OFFICE OF PETITIONS

In re Application of	:	
Dobak III et al.	:	DECISION ON PETITION
Application No. 11/799,191	:	TO WITHDRAW
Filed: May 1, 2007	:	FROM RECORD
Attorney Docket No. 040007	:	

This is a decision on the request to withdraw as attorney of record under 37 C.F.R. § 1.36, filed June 4, 2009.

The request is **NOT APPROVED**.

The Office will only accept correspondence address changes to the most current address information provided for the assignee of the entire interest *who properly became of record under 37 CFR 3.71,* or, if no assignee of the entire interest has properly been made of record, the most current address information provided for the first named inventor. 37 CFR 3.71(c) states:

> *An assignee becomes of record either in a national patent application or a reexamination proceeding by filing a statement in compliance with § 3.73(b) that is signed by a party who is authorized to act on behalf of the assignee.*

Therefore, as there is currently no Statement under 37 CFR 3.73(b) currently of record in the instant application, the Office cannot change the correspondence address to the address on the Request to Withdraw.

Further, a grantable request to withdraw as attorney/agent of record must be signed by every attorney/agent seeking to withdraw or contain a clear indication that one attorney is signing on behalf of another/others.

The request was signed by Mark D. Wieczorek on behalf of all attorneys of record associated with Customer Number 27774. However, since the practitioners were not appointed by a Customer Number upon filing of the instant application, petitioner may not withdraw the practitioners by Customer Number.

All future communications from the Office will continue to be directed to the above-listed address until otherwise notified by applicant.

Currently, there is no Office action that requires a reply.

Telephone inquires concerning this decision should be directed to Petitions Examiner Joan Olszewski at (571) 272-7751. All other inquires concerning either the examination or status of the application should be directed to the Technology Center.

/Liana Walsh/
Liana Walsh
Petitions Examiner
Office of Petitions

UNITED STATES PATENT AND TRADEMARK OFFICE

Commissioner for Patents
United States Patent and Trademark Office
P.O. Box 1450
Alexandria, VA 22313-1450
www.uspto.gov

Karl M. Steins
Steins & Associates
Suite 120
2333 Camino del Rio South
San Diego CA 92108

COPY MAILED

JAN 1 1 2008

OFFICE OF PETITIONS

In re Application of Mohamed Mohab Sabry Application No. 11/799,208 Filed: April 30, 2007 Attorney Docket No. SAB7-K96	DECISION ON PETITION TO MAKE SPECIAL UNDER 37 CFR 1.102(c)(1)

This is a decision on the petition under 37 CFR 1.102(c)(1), filed September 21, 2007, to make the above-identified application special based on applicant's health and age as set forth in M.P.E.P. § 708.02, Sections III and IV.

The petition is **DISMISSED**.

A grantable petition to make an application special under 37 CFR 1.102(c)(1) and MPEP § 708.02, Section III: Applicant's Health, must be accompanied by evidence, such as a doctor's certificate or other medical certificate, showing that the state of health of the applicant is such that he or she might not be available to assist in the prosecution of the application if it were to run its normal course. A grantable petition under MPEP § 708.02, Section IV requires any evidence or showing that applicant is 65 years of age or more. No fee is required.

The instant petition does not include such statements as required above, the petition contains only a statement from applicant himself indicating he is suffering from various health problems. Further, applicant states that his age is 63 which is below the minimum required age of 65.

Petitioner/applicant is cautioned to avoid submitting personal information in documents filed in a patent application that may contribute to identity theft. Personal information such as social security numbers, bank account numbers, or credit card numbers (other than a check or credit card authorization form PTO-2038 submitted for payment purposes) is never required by the USPTO to support a petition or an application. If this type of personal information is included in documents submitted to the USPTO, petitioners/applicants should consider redacting such personal information from the documents before submitting them to the USPTO. Petitioner/applicant is advised that the record of a patent application is available to the public after publication of the application (unless a non-publication request in compliance with 37 CFR

1.213(a) is made in the application) or issuance of a patent. Furthermore, the record from an abandoned application may also be available to the public if the application is referenced in a published application or an issued patent (see 37 CFR 1.14).

Further correspondence with respect to this matter should be addressed as follows:

By Mail:	Mail Stop PETITION Commissioner for Patents P. O. Box 1450 Alexandria, VA 22313-1450
By hand:	U. S. Patent and Trademark Office Customer Service Window, Mail Stop Petitions Randolph Building 401 Dulany Street Alexandria, VA 22314
By FAX:	(571) 273-8300

Telephone inquiries concerning this decision should be directed to Carl Friedman at 571-272-6842.

All other inquiries concerning either the examination or status of the application should be directed to the Technology Center.

The application is being forwarded to the Technology Center Art Unit 1794 for action in its regular turn.

David Bucci
Petitions Examiner
Office of Petitions

UNITED STATES PATENT AND TRADEMARK OFFICE

Commissioner for Patents
United States Patent and Trademark Office
P.O. Box 1450
Alexandria, VA 22313-1450
www.uspto.gov

DAVID R. GILDEA
MENLO PATENT AGENCY LLC
435 HERMOSA WAY
MENLO PARK, CA 94025

COPY MAILED

NOV 14 2007

OFFICE OF PETITIONS

In re Application of

HEFFNER, Brian L. et al.
Application No. 11/799,218
Filed: May 01, 2007
Attorney Docket No. **STR420**

DECISION ON PETITION
TO WITHDRAW
FROM RECORD

This is a decision on the Request to Withdraw as attorney or agent of record under 37 C.F.R. § 1.36(b), filed October 01, 2007.

The request is **NOT APPROVED**.

A grantable request to withdraw as attorney/agent of record must be signed by every attorney/agent seeking to withdraw or contain a clear indication that one attorney is signing on behalf of another/others. A request to withdraw will not be approved unless at least 30 (thirty) days would remain between the date of approval and the later of the expiration date of a time to file a response or the expiration date of the maximum time period which can be extended under 37 C.F.R. § 1.136(a).

The Office cannot approve the request at this time since the reasons provided do not meet any of the conditions under the mandatory or permissive categories enumerated in 37 CFR 10.40. Section 10.40 of Title 37 of the Code of Federal Regulation states, "[a] practitioner shall not withdraw from employment in a proceeding before the Office without permission from the Office[.]" More specifically, 37 CFR 10.40 states, "[i]f paragraph (b) of this section is not applicable, a practitioner may not request permission to withdraw in matter pending before the Office unless such request or such withdrawal is" for one the permissive reasons listed in 37 CFR 10.40(c). The reasons set forth in the request, (undersigned patent agent desires to reduce his patent work prosecution work load), does not meet any the conditions set forth in 37 CFR 10.40.

All future communications from the Office will continue to be directed to the above-listed address until otherwise notified by applicant.

Telephone inquiries concerning this decision should be directed to the undersigned at 571-272- 4231.

Michelle R. Eason
Petitions Examiner
Office of Petitions

cc: **FISH & RICHARDSON, PC**
P.O. BOX 1022
MINNEAPOLIS, MN 55440-1022

UNITED STATES PATENT AND TRADEMARK OFFICE

Commissioner for Patents
United States Patent and Trademark Office
P.O. Box 1450
Alexandria, VA 22313-1450
www.uspto.gov

GOODWIN PROCTER L.L.P
599 LEXINGTON AVE.
NEW YORK NY 10022

COPY MAILED

DEC 2 0 2007

OFFICE OF PETITIONS

In re Application of	:	
ELDRED, CAMERON	:	DECISION GRANTING STATUS
Application No. 11/799,237	:	UNDER 37 CFR 1.47(b)
Filed: 04/30/2007	:	
Attorney Docket No. DLT-006	:	
Title: ELECTRONICALLY IMPLEMENTED	:	
FLOORPLAN AUDITING SYSTEM AND	:	
METHOD	:	

This is in response to the petition under 37 CFR 1.47(b), filed Monday, October 1, 2007. Petitioner obtained an extension of time for response within the second month. Thus, the petition is filed timely.

The petition is GRANTED.

Petitioner has shown that the non-signing inventor constructively refused to join in the filing of the above-identified application.

The application and papers have been reviewed and found in compliance with 37 CFR 1.47(b). This application is hereby accorded Rule 1.47(b) status. As provided in 37 CFR 1.47(c), this Office will forward notice of this application's filing to the non-signing inventor at the address given in the petition. Notice of the filing of this application will also be published in the Official Gazette.

The $200.00 petition fee will be charged to the Deposit Account as authorized.

This application is being referred to the Office of Patent Application Processing.

Telephone inquiries regarding this decision should be directed to the undersigned at (571) 272-3211.

Christina T. Donnell

Christina Tartera Donnell
Senior Petitions Attorney
Office of Petitions

UNITED STATES PATENT AND TRADEMARK OFFICE

Commissioner for Patents
United States Patent and Trademark Office
P.O. Box 1450
Alexandria, VA 22313-1450
www.uspto.gov

Cameron Eldred
37 Rope Ferry Road
Hanover, NH 03755

COPY MAILED

DEC 20 2007

OFFICE OF PETITIONS

In re Application of	:	
ELDRED, CAMERON	:	
Application No. 11/799,237	:	LETTER
Filed: 04/30/2007	:	
Attorney Docket No. DLT-006	:	
Title: ELECTRONICALLY IMPLEMENTED	:	
FLOORPLAN AUDITING SYSTEM AND	:	
METHOD	:	

Dear Mr. Eldred:

You are named as a sole inventor in the above-identified United States patent application filed under the provisions of 35 U.S.C. 116 (United States Code) and 37 CFR 1.47(b), Rules of Practice in Patent Cases. Should a patent be granted on the application you will be designated therein as a sole inventor.

As a named inventor you are entitled to inspect any paper in the file wrapper of the application, order copies of all or any part thereof (at a prepaid cost per 37 CFR 1.19) or make your position of record in the application. Alternatively, you may arrange to do any of the preceding through a registered patent attorney or agent presenting written authorization from you. If you care to join the application, counsel of record (see below) would presumably assist you. Joining in the application would entail the filing of an appropriate oath or declaration by you pursuant to 37 CFR 1.63.

Requests for information regarding your application should be directed to the File Information Unit at (703) 308-2733. Information regarding how to pay for and order a copy of the application, or a specific paper in the application should be directed to Certification Division at (703) 308-9726 or 1-800-972-6382 (outside the Washington D.C. area).

C. T. Donnell

Christina Tartera Donnell
Senior Petitions Attorney
Office of Petitions

GOODWIN PROCTER L.L.P
599 LEXINGTON AVE.
NEW YORK NY 10022

UNITED STATES PATENT AND TRADEMARK OFFICE

Commissioner for Patents
United States Patent and Trademark Office
P.O. Box 1450
Alexandria, VA 22313-1450
www.uspto.gov

GOODWIN PROCTER L.L.P
ATTN: PATENT ADMINISTRATOR
599 LEXINGTON AVE.
NEW YORK NY 10022

COPY MAILED

MAR 0 7 2008

OFFICE OF PETITIONS

In re Application of	:	
Eldred, Cameron	:	
Application No. 11/799,237	:	DECISION ON PETITION
Filed: April 30, 2007	:	
Attorney Docket No. DLT-006	:	

This is a decision on the petition under the unintentional provisions of 37 CFR 1.137(b), filed January 30, 2008, to revive the above-identified application.

The petition is **GRANTED**.

The petition satisfies the requirements of 37 CFR 1.137(b) in that petitioner has supplied (1) the reply in the form of Replacement Drawings, (2) the petition fee, and (3) a proper statement of unintentional delay.

Telephone inquiries concerning this decision should be directed to the undersigned at (571) 272-3206.

This matter is being referred to the Office of Patent Application Processing for further processing.

Liana Walsh
Petitions Examiner
Office of Petitions

UNITED STATES PATENT AND TRADEMARK OFFICE

UNITED STATES DEPARTMENT OF COMMERCE
United States Patent and Trademark Office
Address: COMMISSIONER FOR PATENTS
P.O. Box 1450
Alexandria, Virginia 22313-1450
www.uspto.gov

KIMBERLY-CLARK WORLDWIDE, INC.
Tara Pohlkotte
2300 Winchester Rd.
NEENAH, WI 54956

Mail Date: 04/21/2010

Applicant	: Waihong Leong	: DECISION ON REQUEST FOR
Patent Number	: 7648005	: RECALCULATION of PATENT
Issue Date	: 01/19/2010	: TERM ADJUSTMENT IN VIEW
Appliction No	: 11/799,264	: OF WYETH AND NOTICE OF INTENT TO
Filed	: 04/30/2007	: ISSUE CERTIFICATE OF CORRECTION
		:

The Request for Recalculation is **GRANTED** to the extent indicated.

The patent term adjustment has been determined to be **67** days. The USPTO will *sua sponte* issue a certificate of correction reflecting the amount of PTA days determined by the recalculation.

Prior to the issuance of the certificate of correction, the USPTO will afford patentee an opportunity to be heard and request reconsideration. Accordingly, patentee has **one month or thirty (30) days**, whichever is longer, to file a request for reconsideration of this patent term adjustment calculation. See 35 U.S.C. 154(b)(3)(B)(ii) and 37 CFR 1.322(a)(4). No extensions of time will be granted under 37 CFR 1.136.

Patentee should use document code PET.OP if electronically filing a request for reconsideration of this patent term adjustment calculation. The patentee must also include the information required by 37 CFR 1.705(b)(2) and the fee required by 37 CFR 1.18(e). If patentee does not file a timely request for reconsideration of this patent term adjustment calculation including the information required by 37 CFR 1.705(b)(2) and the fee required by 37 CFR 1.18(e), the USPTO will issue a certificate of correction reflecting the PTA determination noted above.

Patentee should be aware that in order to preserve the right to review in the United States District Court for the District of Columbia of the USPTO patent term adjustment determination, patentee must ensure that he or she also take the steps required under 35 U.S.C. 154(b)(4)(A) in a timely manner. Nothing in the request for recalculation should be construed as providing an alternative time frame for commencing a civil action under 35 U.S.C. 154(b)(4)(A).

Any questions concerning this decision should be directed to the Office of Patent Legal Administration at 571-272-7702.

UNITED STATES PATENT AND TRADEMARK OFFICE

Commissioner for Patents
United States Patent and Trademark Office
P.O. Box 1450
Alexandria, VA 22313-1450
www.uspto.gov

COPY MAILED

AUG 2 4 2009

OFFICE OF PETITIONS

Paper No.

Matlock Law Group, PC
1485 Treat Blvd.
Suite #200
Walnut Creek CA 94597

In re Application of	:	
Adrian Robins	:	
Application No. 11/799,280	:	DECISION ON PETITION
Filed: April 30, 2007	:	PURSUANT TO
Attorney Docket No.: 009PC-001	:	37 C.F.R. § 1.137(B)
Title: MEDIA CORE CABINET FURNITURE SYSTEM AND METHOD	:	

This is a decision on the petition pursuant to 37 C.F.R. § 1.137(b), filed June 10, 2009 to revive the above-identified application, and supplemented on June 15, 2009.

This petition pursuant to 37 C.F.R. § 1.137(b) is **GRANTED**.

The above-identified application became abandoned for failure to reply in a timely manner to the non-final Office action, mailed November 12, 2008, which set a shortened statutory period for reply of three months. No response was received, and no extensions of time under the provisions of 37 C.F.R. § 1.136(a) were requested. Accordingly, the above-identified application became abandoned on February 13, 2009. A notice of abandonment was mailed on June 9, 2009.

A grantable petition pursuant to 37 C.F.R. § 1.137(b) must be accompanied by:

(1) The reply required to the outstanding Office action or notice, unless previously filed;
(2) The petition fee as set forth in 37 C.F.R. § 1.17(m);

(3) A statement that the entire delay in filing the required reply from the due date for the reply until the filing of a grantable petition pursuant to this paragraph was unintentional. The Commissioner may require additional information where there is a question whether the delay was unintentional, and;
(4) Any terminal disclaimer (and fee as set forth in 37 C.F.R. § 1.20(d)) required pursuant to paragraph (d) of this section.

With this petition, Petitioner has submitted the petition fee, an amendment, and the proper statement of unintentional delay. A terminal disclaimer is not required. As such, the first three requirements of Rule 1.137(b) have been met. The fourth requirement of Rule 1.137(b) is not applicable, as a terminal disclaimer is not required.[1]

Petitioner has also submitted a three-month extension of time. An extension of time under 37 C.F.R. § 1.136 must be filed prior to the expiration of the maximum extendable period for reply.[2] Accordingly, since the $555 extension of time submitted with the petition on June 15, 2009 was filed subsequent to the maximum extendable period for reply, this fee is unnecessary and will be refunded via the mailing of a Treasury Check in due course.

The Technology Center will be notified of this decision, and jurisdiction over this application is transferred to the Technology Center, so that the application may receive further processing. The Technology Center's support staff will notify the Examiner of this decision, so that the amendment that was received on June 10, 2009 can be processed in due course.

Petitioner may find it beneficial to view Private PAIR within a fortnight of the present decision to ensure that the revival has been acknowledged by the Technology Center in response to this decision. It is noted that all inquiries with regard to any failure of that change in status should be directed to the Technology Center where that change of status must be effected - **the Office of Petitions cannot effectuate a change of status.**

---

1 See Rule 1.137(d).
2 See In re Application of S., 8 USPQ2d 1630, 1631 (Comm'r Pats. 1988).

Telephone inquiries regarding *this decision* should be directed to the undersigned at (571) 272-3225.[3] All other inquiries concerning examination procedures or status of the application should be directed to the Technology Center.

Paul Shanoski
Senior Attorney
Office of Petitions

---

3 Petitioner will note that all practice before the Office should be in writing, and the action of the Office will be based exclusively on the written record in the Office. See 37 C.F.R. § 1.2. As such, Petitioner is reminded that no telephone discussion may be controlling or considered authority for Petitioner's further action(s).

UNITED STATES PATENT AND TRADEMARK OFFICE

Commissioner for Patents
United States Patent and Trademark Office
P.O. Box 1450
Alexandria, VA 22313-1450
www.uspto.gov

MAILED

JUN 28 2010

OFFICE OF PETITIONS

MORRISON & FOERSTER LLP
12531 HIGJ BLUFF DRIVE
SUITE100
SAN DIEGO, CA 92130-2040

In re Application of Daria Mochly-Rosen, et al. Application No. 11/799,290 Filed: April 30, 2007 Attorney Docket No. 578422000401	DECISION ON PETITION TO WITHDRAW FROM RECORD

This is a decision on the Request to Withdraw as attorney or agent of record under 37 C.F.R. § 1.36(b), filed May 21, 2010.

The request is **APPROVED**.

A grantable request to withdraw as attorney/agent of record must be signed by every attorney/agent seeking to withdraw or contain a clear indication that one attorney is signing on behalf of another/others. A request to withdraw will not be approved unless at least 30 (thirty) days would remain between the date of approval and the later of the expiration date of a time to file a response or the expiration date of the maximum time period which can be extended under 37 C.F.R. § 1.136(a).

The request was signed by James J. Mullen, III on behalf of all attorneys of record. All attorneys/agents have been withdrawn. Applicant is reminded that there is no attorney of record at this time.

All future communications from the Office will be directed to the assignee of the entire interest at the first copied address below until otherwise properly notified by the applicant.

Telephone inquiries concerning this decision should be directed to Terri Johnson at 571-272-2991.

Terri Johnson
Petitions Examiner
Office of Petitions

cc: **Leland Stanford Junior University**
Board of Trustees
900 Welch Road
Suite 350
Palo Alto CA 94304

UNITED STATES PATENT AND TRADEMARK OFFICE

UNITED STATES DEPARTMENT OF COMMERCE
United States Patent and Trademark Office
Address: COMMISSIONER FOR PATENTS
P.O. Box 1450
Alexandria, Virginia 22313-1450
www.uspto.gov

APPLICATION NUMBER	FILING OR 371(C) DATE	FIRST NAMED APPLICANT	ATTY. DOCKET NO./TITLE
11/799,290	04/30/2007	Daria Mochly-Rosen	578422000401

CONFIRMATION NO. 5683

POWER OF ATTORNEY NOTICE

OC000000042313913

25225
MORRISON & FOERSTER LLP
12531 HIGH BLUFF DRIVE
SUITE 100
SAN DIEGO, CA 92130-2040

Date Mailed: 06/28/2010

NOTICE REGARDING CHANGE OF POWER OF ATTORNEY

This is in response to the Power of Attorney filed 05/21/2010.

- The withdrawal as attorney in this application has been accepted. Future correspondence will be mailed to the new address of record. 37 CFR 1.33.

/tsjohnson/

Office of Data Management, Application Assistance Unit (571) 272-4000, or (571) 272-4200, or 1-888-786-0101

UNITED STATES PATENT AND TRADEMARK OFFICE

Commissioner for Patents
United States Patent and Trademark Office
P.O. Box 1450
Alexandria, VA 22313-1450
www.uspto.gov

AJIT SINGH GILL
4169 BENNION ROAD
SALT LAKE CITY, UT 84119

COPY MAILED

JUL 3 1 2007

OFFICE OF PETITIONS

In re Application of	:	
Ajit Singh Gill	:	
Application No. 11/799,300	:	DECISION ON PETITION
Filed: April 30, 2007	:	TO MAKE SPECIAL UNDER
Attorney Docket No.	:	37 CFR 1.102(c)(1)
	:	

This is a decision on the petition under 37 CFR 1.102(c)(1), filed April 30, 2007, to make the above-identified application special based on applicant's age as set forth in M.P.E.P. § 708.02, Section IV.

The petition is **GRANTED**.

A grantable petition to make an application special under 37 CFR 1.102(c)(1) and MPEP § 708.02, Section IV: Applicant's Age must be accompanied by evidence showing that at least one of the applicants is 65 years of age, or more, such as a birth certificate or a statement by applicant. No fee is required

The instant petition includes a declaration statement signed by applicant. Accordingly, the above-identified application has been accorded "special" status.

Telephone inquiries concerning this decision should be directed to undersigned at 571-272-1642.

All other inquiries concerning either the examination or status of the application should be directed to the Technology Center.

The application is being referred back to the Office of Initial Patent Examination to await a reply to the Notice to File Corrected Application Papers (Notice) mailed May 25, 2007. This application will be accorded "special" status when pre-examination processing is done.

April M. Wise
Petitions Examiner
Office of Petitions

UNITED STATES PATENT AND TRADEMARK OFFICE

UNITED STATES DEPARTMENT OF COMMERCE
United States Patent and Trademark Office
Address: COMMISSIONER FOR PATENTS
P.O. Box 1450
Alexandria, Virginia 22313-1450
www.uspto.gov

APPLICATION NO.	FILING DATE	FIRST NAMED INVENTOR	ATTORNEY DOCKET NO.	CONFIRMATION NO.
11/799,313	05/01/2007	Hideo Tomita	SONYJP 3.0-1359	5206

7590 09/09/2009
LERNER, DAVID, LITTENBERG,
KRUMHOLZ & MENTLIK
600 SOUTH AVENUE WEST
WESTFIELD, NJ 07090

EXAMINER
HJERPE, RICHARD A

ART UNIT	PAPER NUMBER
2629	

MAIL DATE	DELIVERY MODE
09/09/2009	PAPER

DECISION GRANTING PETITION UNDER 37 CFR 1.138(d)

The declaration of express abandonment is recognized

This is in response to the petition under 37 CFR 1.138(d), requesting for a refund of any previously paid search fee and excess claims fee in the above-identified application.

The petition is granted.

The express abandonment is recognized. Any previously paid search fee and excess claims fee are hereby refunded.

Telephone inquiries should be directed to the Office of Data Management at (571) 272-4200.

Mimi Farmer

Patent Publication Branch
Office of Data Management

Adjustment date: 09/11/2009 NFARMER
07731/2007 HLE333 00000055 121095 11799313
02 FC:1111 500.00 CR
04 FC:1201 400.00 CR

FORM PET651G (Rev. 08/07)

UNITED STATES PATENT AND TRADEMARK OFFICE

Commissioner for Patents
United States Patent and Trademark Office
P.O. Box 1450
Alexandria, VA 22313-1450
www.uspto.gov

JERRY R. DUHE JR
P.O. BOX 670115
HOUSTON TX 77267

COPY MAILED
DEC 16 2008

In re Application of :
Duhe :
Application No. 11/799,322 : ON PETITION
Filed: May 1, 2007 :
For: LIGHTED LENS HOUSING FOR :
JEWELERS LOUPE

This decision is in response to the petition to withdraw the holding of abandonment under 37 CFR 1.181 filed October 24, 2008.

The petition is **DISMISSED**.

Any request for reconsideration of this decision should be submitted within two (2) months from the mail date of this decision and be entitled "Renewed Petition to Withdraw the Holding of Abandonment under 37 CFR 1.181." *See* 37 CFR 1.181(f).

The application became abandoned June 15, 2008 for failure to submit a timely response to the non-final Office action mailed March 14, 2008. The non-final Office action set a three month shortened statutory period of time for reply. Notice of Abandonment was mailed September 30, 2008.

Petitioner requests that the Office withdraw the holding of abandonment due to non-receipt of the non-final Office action. Petitioner has included a copy of a "record of mail receipt from The PTO and PCT Offices."

A review of the record indicates no irregularity in the mailing of the non-final Office action. In the absence of any irregularity in the mailing, there is a strong presumption that the Office action was properly mailed to the address of record.

As petitioner is a pro-se applicant, the Office understands that petitioner may not keep a formal docket record system for his correspondence. Nevertheless, petitioner must provide some sort of showing explaining the manner in which petitioner receives mail from the USPTO, maintains files for patent matters, and treats mail received for such matter. Specifically, petitioner must explain the system for keeping track of patent matters - where petitioner keeps the correspondence; where he writes down due dates; how he knows replies are due, etc. In essence, petitioner must explain how he reminds himself of response due dates and show that the due date for the non-final Office action of March 14, 2008, was not entered into that system. Petitioner

should include any available documentary evidence of the mail received, covering a reasonable period after March 14, 2008, to demonstrate non-receipt of the non-final Office action. Petitioner should also provide the USPTO with copies of any records or other methods, which could serve as a reminder of the due date for a response to an Office action, and where petitioner would have entered the receipt date of the Office action had petitioner received it (for example, a copy of the outside of a file or a calendar maintained by petitioner), if these documents are available. Furthermore, petitioner must include a statement from himself, or any other person with access to the Post Office Box who may have handled the Office action, indicating that a search was conducted of the location where the correspondence from the USPTO would have been kept; however, the non-final Office action was not found. Lastly, petitioner must state that he was, in fact, receiving mail at the correspondence address of record for a reasonable time after March 14, 2008; the period when he would have received the non-final Office action.

In the present petition, petitioner did not submit sufficient statements, documentary evidence, or explanation of his method for tracking due dates for filing responses to communications from the USPTO to show he did not receive the non-final Office action. Therefore, the petition to withdraw the holding of abandonment is **dismissed**. A copy of the non-final Office action accompanies this decision for petitioner's convenience.

ALTERNATIVE VENUE

Petitioner is strongly encouraged to consider filing a petition under 37 CFR 1.137(b) to revive an unintentionally abandoned application instead of filing a renewed petition under 37 CFR 1.181 or a petition under 37 CFR 1.137(a).

A grantable petition pursuant to 37 CFR 1.137(b) must be accompanied by:

> (1) The reply required to the outstanding Office action or notice, unless previously filed. In nonprovisional utility application abandoned for failure to respond to a non-final Office action, the required reply may be met by filing either (A) an argument or amendment under 37 CFR 1.111 or (B) a continuing application under 37 CFR 1.53(b).
>
> (2) The petition fee as set forth in 37 CFR 1.17(m), **$810.00 for a small entity**;
>
> (3) A statement that the entire delay in filing the required reply from the due date for the reply until the filing of a grantable petition was unintentional. The Director may require additional information where there is a question whether the delay was unintentional.

A form for filing a petition to revive an unintentionally abandoned application accompanies this decision for petitioner's convenience. If petitioner desires to file a petition under 37 CFR 1.137(b) instead of filing a request for reconsideration, petitioner must complete the enclosed petition form (PTO/SB/64) and pay the $810.00 petition fee.

Petitioner may wish to consider hiring a registered patent attorney or agent to assist in the prosecution of this application. Additionally, petitioner is encouraged to contact the Inventors Assistance Center (IAC) by telephone at 800-786-9199 or 571-272-1000, Monday through Friday from 8:30 AM to 5:30 PM (EST). The IAC provides patent information and services to

the public and is staffed by former Supervisory Patent Examiners and experienced Primary Examiners who answer general questions concerning patent examining policy and procedure.

Further correspondence with respect to this matter should be addressed as follows:

By mail: Mail Stop Petition
Commissioner for Patents
P.O. Box 1450
Alexandria, VA 22313-1450

By FAX: (571) 273-8300
Attn: Office of Petitions

By hand: Customer Service Window
Randolph Building
401 Dulany Street
Alexandria, VA 22314

Telephone inquiries related to this decision may be directed to the undersigned at (571) 272-3205.

Alesia M. Brown
Petitions Attorney
Office of Petitions

Enclosures: Petition For Revival Of An Application For Patent Abandoned Unintentionally Under 37 CFR 1.137(b); Form PTO/SB/64, Privacy Act Statement; and a copy of the Office action dated March 14, 2008.

UNITED STATES PATENT AND TRADEMARK OFFICE

UNITED STATES DEPARTMENT OF COMMERCE
United States Patent and Trademark Office
Address: COMMISSIONER FOR PATENTS
P.O. Box 1450
Alexandria, Virginia 22313-1450
www.uspto.gov

APPLICATION NO.	FILING DATE	FIRST NAMED INVENTOR	ATTORNEY DOCKET NO.	CONFIRMATION NO.
11/799,322	05/01/2007	Jerry Ronald Duhe JR.		5197

7590 03/14/2008

JERRY R. DUHE JR
P.O. BOX 670115
HOUSTON, TX 77267

EXAMINER
TSIDULKO, MARK

ART UNIT	PAPER NUMBER
2875	

MAIL DATE	DELIVERY MODE
03/14/2008	PAPER

Please find below and/or attached an Office communication concerning this application or proceeding.

The time period for reply, if any, is set in the attached communication.

Office Action Summary	Application No.	Applicant(s)
	11/799,322	DUHE, JERRY RONALD
	Examiner	Art Unit
	MARK TSIDULKO	2875

-- The MAILING DATE of this communication appears on the cover sheet with the correspondence address --

Period for Reply

A SHORTENED STATUTORY PERIOD FOR REPLY IS SET TO EXPIRE 3 MONTH(S) OR THIRTY (30) DAYS, WHICHEVER IS LONGER, FROM THE MAILING DATE OF THIS COMMUNICATION.

- Extensions of time may be available under the provisions of 37 CFR 1.136(a). In no event, however, may a reply be timely filed after SIX (6) MONTHS from the mailing date of this communication.
- If NO period for reply is specified above, the maximum statutory period will apply and will expire SIX (6) MONTHS from the mailing date of this communication.
- Failure to reply within the set or extended period for reply will, by statute, cause the application to become ABANDONED (35 U.S.C. § 133). Any reply received by the Office later than three months after the mailing date of this communication, even if timely filed, may reduce any earned patent term adjustment. See 37 CFR 1.704(b).

Status

1)☒ Responsive to communication(s) filed on *01 May 2007*.

2a)☐ This action is **FINAL**. 2b)☒ This action is non-final.

3)☐ Since this application is in condition for allowance except for formal matters, prosecution as to the merits is closed in accordance with the practice under *Ex parte Quayle*, 1935 C.D. 11, 453 O.G. 213.

Disposition of Claims

4)☒ Claim(s) *1-16* is/are pending in the application.

4a) Of the above claim(s) _____ is/are withdrawn from consideration.

5)☐ Claim(s) _____ is/are allowed.

6)☒ Claim(s) *1-16* is/are rejected.

7)☐ Claim(s) _____ is/are objected to.

8)☐ Claim(s) _____ are subject to restriction and/or election requirement.

Application Papers

9)☐ The specification is objected to by the Examiner.

10)☒ The drawing(s) filed on *01 May 2007* is/are: a)☒ accepted or b)☐ objected to by the Examiner.

Applicant may not request that any objection to the drawing(s) be held in abeyance. See 37 CFR 1.85(a).

Replacement drawing sheet(s) including the correction is required if the drawing(s) is objected to. See 37 CFR 1.121(d).

11)☐ The oath or declaration is objected to by the Examiner. Note the attached Office Action or form PTO-152.

Priority under 35 U.S.C. § 119

12)☐ Acknowledgment is made of a claim for foreign priority under 35 U.S.C. § 119(a)-(d) or (f).

a)☐ All b)☐ Some * c)☐ None of:

1.☐ Certified copies of the priority documents have been received.

2.☐ Certified copies of the priority documents have been received in Application No. _____.

3.☐ Copies of the certified copies of the priority documents have been received in this National Stage application from the International Bureau (PCT Rule 17.2(a)).

* See the attached detailed Office action for a list of the certified copies not received.

Attachment(s)

1) ☒ Notice of References Cited (PTO-892)

2) ☐ Notice of Draftsperson's Patent Drawing Review (PTO-948)

3) ☐ Information Disclosure Statement(s) (PTO/SB/08) Paper No(s)/Mail Date _____.

4) ☐ Interview Summary (PTO-413) Paper No(s)/Mail Date. _____ .

5) ☐ Notice of Informal Patent Application

6) ☐ Other: _____.

DETAILED ACTION

Claim Objections

Claims 1-9, 13, 16 are objected to because of the following informalities:

Referring to Claims 1, 5, 9 and 13 the words "led" and "led(s)" should be changed to -LED- and -LEDs-. Also, regarding claim 5, it is unclear what does Applicant intend by "means to affix. What and where to affix?

Referring to Claim 3 it is unclear what does Applicant intend by "illuminating means is a plurality". Plurality of what?

Referring to Claim 9 it is unclear what does Applicant intend by "one led is a plurality".

Referring to Claim 16 the phrase "The Lens housing" (line 1) should be changed to -The lens housing-.

Claims 2-4 are objected as claims depended on claim 1.

Claims 6-9 and 16 are objected as claims depended on claim 5.

Appropriate correction is required.

Claim Rejections - 35 USC § 103

The following is a quotation of 35 U.S.C. 103(a) which forms the basis for all obviousness rejections set forth in this Office action:

> (a) A patent may not be obtained though the invention is not identically disclosed or described as set forth in section 102 of this title, if the differences between the subject matter sought to be patented and the prior art are such that the subject matter as a whole would have been obvious at the time the invention was made to a person having ordinary skill in the art to which said subject matter pertains. Patentability shall not be negatived by the manner in which the invention was made.

Claims 1-16 are rejected under 35 U.S.C. 103(a) as being unpatentable over Heine et al. (US 5,196,964) in view of Dickson (US 6,322,226).

Referring to Claims 1-9, 16 Heine et al. disclose (Fig.2) a body [12], an illumination means [18], a means [17] for attachment a light source portion to a magnifying lens [27] portion, an annular deflection means [14] for changing a focal distance and a power source (col.1, lines 48-50). It is well known, that a jewelers loupe is a magnifying lens.

Heine et al. disclose the instant claimed invention except for lens receiving channel and LED as a light source.

Dickson discloses an adjustable illuminator having a channel [39] for receiving lens [28] (Fig.4) and a plurality of LEDs [34]. The channel has two ends (at two opposite sides of the housing). LEDs are recognized in the illumination art to have many desirable advantages, including reduced size, high efficiency, low power consumption, long life, resistance to vibrations, and low heat production, over other light sources.

It would have been obvious to one having ordinary skill in the art, at the time the invention was made, to provide the device of Heine et al. with a channel for receiving lens, as taught by Dickson, in order to fix the lens in the housing in a stable position, and replace the light bulb in the device of Heine et al. with the LEDs, as taught by Dickson, in order to save electricity and extend service life of the device.

Referring to Claims 10-13 Heine et al. disclose (Fig.2) a body [12] having recess for focusing ring [14] and a chamber (hollow interior) [12a], an illumination means [18] and a battery (col.1, lines 48-50).

Heine et al. disclose the instant claimed invention except for lens receiving channel and LED as a light source.

Dickson discloses an adjustable illuminator having a channel [39] for receiving lens [28] (Fig.4) and a plurality of LEDs [34]. The channel has two ends (at two opposite sides of the housing). LEDs are recognized in the illumination art to have many desirable advantages, including reduced size, high efficiency, low power consumption, long life, resistance to vibrations, and low heat production, over other light sources.

Referring to Claim 14 it is well known that a jewelers loupe is a magnifying lens.

Referring to Claims 15 Heine et al. disclose (Fig.1) a deflecting means [14] for changing a focal distance.

It would have been obvious to one having ordinary skill in the art, at the time the invention was made, to provide the device of Heine et al. with a channel for receiving lens, as taught by Dickson, in order to fix the lens in the housing in a stable position, and replace the light bulb in the device of Heine et al. with the LEDs, as taught by Dickson, in order to save electricity and extend service life of the device.

Conclusion

Any inquiry concerning this communication or earlier communications from the examiner should be directed to Mark Tsidulko whose telephone number is (571) 272-2384. The examiner can normally be reached on 8 - 5.

If attempts to reach the examiner by telephone are unsuccessful, the examiner's supervisor, Sandra O'Shea can be reached on (571) 272-2378. The fax phone number for the

organization where this application or proceeding is assigned is (571) 273-8300 for all communications.

Information regarding the status of an application may be obtained from the Patent Application Information Retrieval (PAIR) system. Status information for published applications may be obtained from either Private PAIR or Public PAIR. Status information for unpublished applications is available through Private PAIR only. For more information about the PAIR system, see http://pair-direct.uspto.gov. Should you have questions on access to the Private PAIR system, contact the Electronic Business Center (EBC) at 866-217-9197 (toll-free).

/Sandra L. O'Shea/
Supervisory Patent Examiner, Art Unit 2875

M.T.
February 28, 2008

UNITED STATES PATENT AND TRADEMARK OFFICE

Commissioner for Patents
United States Patent and Trademark Office
P.O. Box 1450
Alexandria, VA 22313-1450
www.uspto.gov

MAILED

MAR 01 2010

OFFICE OF PETITIONS

JERRY R. DUHE JR
P.O. BOX 670115
HOUSTON TX 77267

In re Application of :
Duhe :
Application No. 11/799,322 : ON PETITION
Filed: May 1, 2007 :
For: LIGHTED LENS HOUSING FOR :
JEWELERS LOUPE

This decision is in response to the renewed petition to withdraw the holding of abandonment under 37 CFR 1.181 filed February 17, 2009.

The petition is **DISMISSED**.

Any request for reconsideration of this decision should be submitted within two (2) months from the mail date of this decision and be entitled "Renewed Petition to Withdraw the Holding of Abandonment under 37 CFR 1.181." *See* 37 CFR 1.181(f).

The application became abandoned June 15, 2008 for failure to submit a timely response to the non-final Office action mailed March 14, 2008. The non-final Office action set a three month shortened statutory period of time for reply. Notice of Abandonment was mailed September 30, 2008. A petition under 37 CFR 1.181 was filed October 24, 2008 and dismissed December 16, 2008.

Petitioner continues to allege non-receipt of the non-final Office action and states:

> "I separate mail as it comes in, placing all PTO, PCT, EPO and related in a single bin for review and documentation.
>
> To this date I still receive mail at my address that does not belong to me. Not everyone returns the improperly delivered mail as some of us. The fact remains that mail does get lost and at times improperly delivered."

A review of the record indicates no irregularity in the mailing of the non-final Office action. In the absence of any irregularity in the mailing, there is a strong presumption that the Office action was properly mailed to the address of record.

The Office previously advised petitioner of the procedure to establish non-receipt of the non-final Office action. Petitioner was required to provide some sort of showing explaining the

manner in which petitioner receives mail from the USPTO, maintains files for patent matters, and treats mail received for such matter. Specifically, petitioner should explain the system for keeping track of patent matters - where petitioner keeps the correspondence; where he writes down due dates; how he knows replies are due, etc. Petitioner was required to explain how he reminds himself of response due dates and show that the due date for the non-final Office action of March 14, 2008, was not entered into that system.

While petitioner has included a copy of what purports to be a record of mail received from the USPTO, PCT, and other related Offices, petitioner has not provided any explanation as has to how this record of mail was prepared and maintained.

Petitioner has not provided sufficient statements, documentary evidence, or explanation of his method for tracking due dates for filing responses to communications from the USPTO to show he did not receive the non-final Office action. Therefore, the petition to withdraw the holding of abandonment is **dismissed**.

ALTERNATIVE VENUE

Petitioner may wish to consider filing a petition under 37 CFR 1.137(b) to revive an unintentionally abandoned application instead of filing a renewed petition under 37 CFR 1.181 or a petition under 37 CFR 1.137(a).

A grantable petition pursuant to 37 CFR 1.137(b) must be accompanied by:

> (1) The reply required to the outstanding Office action or notice, unless previously filed. In nonprovisional utility application abandoned for failure to respond to a non-final Office action, the required reply may be met by filing either (A) an argument or amendment under 37 CFR 1.111 or (B) a continuing application under 37 CFR 1.53(b).
>
> (2) The petition fee as set forth in 37 CFR 1.17(m), **$810.00 for a small entity**;
>
> (3) A statement that the entire delay in filing the required reply from the due date for the reply until the filing of a grantable petition was unintentional. The Director may require additional information where there is a question whether the delay was unintentional.

As the form for this purpose has previously been mailed to petitioner, a duplicate is not enclosed.

Petitioner may wish to consider hiring a registered patent attorney or agent to assist in the prosecution of this application. Additionally, petitioner is encouraged to contact the Inventors Assistance Center (IAC) by telephone at 800-786-9199 or 571-272-1000, Monday through Friday from 8:30 AM to 5:30 PM (EST). The IAC provides patent information and services to the public and is staffed by former Supervisory Patent Examiners and experienced Primary Examiners who answer general questions concerning patent examining policy and procedure.

Further correspondence with respect to this matter should be addressed as follows:

By mail: Mail Stop Petition

Commissioner for Patents
P.O. Box 1450
Alexandria, VA 22313-1450

By FAX: (571) 273-8300
Attn: Office of Petitions

By hand: Customer Service Window
Randolph Building
401 Dulany Street
Alexandria, VA 22314

Telephone inquiries related to this decision may be directed to the undersigned at (571) 272-3205.

/ALESIA M. BROWN/

Alesia M. Brown
Petitions Attorney
Office of Petitions

UNITED STATES PATENT AND TRADEMARK OFFICE

Commissioner for Patents
United States Patent and Trademark Office
P.O. Box 1450
Alexandria, VA 22313-1450

JENKINS, WILSON, TAYLOR & HUNT, P.A.
3100 TOWER BLVD, SUITE 1200
DURHAM, N.C. 27707

COPY MAILED
NOV 25 2008

Applicant: Hoehner
Appl. No.: 11/799,325
Filing Date: May 1, 2007
Title: METHODS AND SYSTEMS, AND COMPUTER PROGRAM PRODUCTS FOR AUTOMATICALLY DETECTING LEAKS IN A TYPE III HYDRANT FUEL PIPING SYSTEM
Attorney Docket No.: 1663/2
Pub. No.: US 2207-0255515 A1
Pub. Date: November 1, 2007

This is a decision on the request for a corrected patent application publication under 37 CFR 1.221(b), received on December 10, 2007, for the above-identified application. Applicant requests that the application be republished because the patent application publication contains a material error in claim 1, 11 and 19.

The request is DISMISSED.

Applicant requests that the application be republished because the patent application publication contains a material error in claims 1, 11 and 19 of the publication wherein "over time" has been printed as one word "overtime".

37 CFR 1.221 (b) is applicable "only when the Office makes a material mistake which is apparent from Office records.... Any request for a corrected publication or revised patent application publication other than provided as provided in paragraph (a) of this section must be filed within two months from the date of the patent application publication. This period is not extendable." A material mistake must affect the public's ability to appreciate the technical disclosure of the patent application publication, to determine the scope of the patent application publication, or to determine the scope of the provisional rights that an applicant may seek to enforce upon issuance of a patent. [1]

The error in claims 1, 11 and 19 may be an Office error, but it is a not material Office error under 37 CFR 1.221. The change in the spelling of "overtime" for "over time" does not affect the understanding of the application. The mistake does not affect the public's ability to appreciate the technical disclosure of the patent application publication, or determine the scope of the patent

[1] Changes to Implement Eighteen-Month Publication of Patent Applications, 65 FR 57023, 57038 (Sept. 20, 2000), 1239, Off. Gaz. Pat. Office Notices 63, 75 (Oct. 10, 2000) (final rule).

application publication or determine the scope of the provisional rights that an applicant may seek to enforce upon issuance of a patent.

The applicant is advised that a "request for republication of an application previously published" may be filed under 37 CFR 1.221 (a). Such a request for republication "must include a copy of the application compliance with the Office's electronic filing system requirements and be accompanied by the publication fee set forth in § 1.18 (d) and the processing fee set forth in § 1.17 (i)." If the request for republication does not comply with the electronic filing system requirements, the republication will not take place and the publication fee set forth in § 1.18 (d) will be refunded. The processing fee will be retained.

Any request for republication under 37 CFR 1.221(a), must be submitted via the EFS system, as a "Pre-Grant Publication" and questions or request for reconsideration of the decision, should be addressed as follows:

By mail to: Mail Stop PGPUB
Commissioner for Patents
P.O. Box 1450
Alexandria, Va. 22313-1450

By facsimile: 571-273-8300

Inquiries relating to this matter may be directed to Mark Polutta at (571) 272-7709.

Mark Polutta
Senior Legal Advisor
Office of Patent Legal Administration
Office of the Deputy Commissioner
for Patent Examination Policy

UNITED STATES PATENT AND TRADEMARK OFFICE

Commissioner for Patents
United States Patent and Trademark Office
P.O. Box 1450
Alexandria, VA 22313-1450
www.uspto.gov

WILMER CUTLER PICKERING HALE AND DORR LLP
399 PARK AVENUE
NEW YORK NY 10022

COPY MAILED

JUN 01 2007

OFFICE OF PETITIONS

In re Application of	:	
Brinkman et al.	:	
Application No. 11/799,339	:	LETTER
Filed: 05/01/2007	:	
Attorney Docket No. 0103864.00100US3	:	

This is in response to the petition under 37 CFR 1.47(a), filed May 1, 2007.

In accordance with 37 CFR 1.63(d), petitioner submitted a copy of the executed declaration filed in Application No. 09/161,960, filed on September 29, 1998. The present application is a continuation of Application No. 10/784,898, filed February 24, 2004, now Patent No. 7,216,084, which is a continuation of Application No. 09/161,960 filed September 29, 1998, now Patent No. 6,697,783. Additionally, petitioner submitted a copy of the decision, mailed on November 25, 2003, granting a petition under 37 CFR 1.47(a) in prior Application No. 09/161,960. As § 1.47(a) status was granted in the prior application, this application is hereby accorded § 1.47(a) status.

The present petition is **dismissed** as involving a moot issue because a petition is unnecessary to accord § 1.47(a) status in this application. As provided in 37 CFR 1.47(c), the Office is dispensing with the notice provision in this application because the Office provided notice to the non-signing inventor regarding the § 1.47(a) status in the prior application.

Telephone inquiries related to this decision may be directed to the undersigned at (571) 272-3211.

C. T. Donnell

Christina Tartera Donnell
Senior Petitions Attorney
Office of Petitions

UNITED STATES PATENT AND TRADEMARK OFFICE

UNITED STATES DEPARTMENT OF COMMERCE
United States Patent and Trademark Office
Address: COMMISSIONER FOR PATENTS
P.O. Box 1450
Alexandria, Virginia 22313-1450
www.uspto.gov

KENYON & KENYON LLP
ONE BROADWAY
NEW YORK, NY 10004

Mail Date: 04/21/2010

Applicant	: David Devore	: DECISION ON REQUEST FOR
Patent Number	: 7651683	: RECALCULATION of PATENT
Issue Date	: 01/26/2010	: TERM ADJUSTMENT IN VIEW
Appliction No	: 11/799,347	: OF WYETH AND NOTICE OF INTENT TO
Filed	: 05/01/2007	: ISSUE CERTIFICATE OF CORRECTION
		:

The Request for Recalculation is **GRANTED** to the extent indicated.

The patent term adjustment has been determined to be **0** days. The USPTO will *sua sponte* issue a certificate of correction reflecting the amount of PTA days determined by the recalculation.

Prior to the issuance of the certificate of correction, the USPTO will afford patentee an opportunity to be heard and request reconsideration. Accordingly, patentee has **one month or thirty (30) days**, whichever is longer, to file a request for reconsideration of this patent term adjustment calculation. See 35 U.S.C. 154(b)(3)(B)(ii) and 37 CFR 1.322(a)(4). No extensions of time will be granted under 37 CFR 1.136.

Patentee should use document code PET.OP if electronically filing a request for reconsideration of this patent term adjustment calculation. The patentee must also include the information required by 37 CFR 1.705(b)(2) and the fee required by 37 CFR 1.18(e). If patentee does not file a timely request for reconsideration of this patent term adjustment calculation including the information required by 37 CFR 1.705(b)(2) and the fee required by 37 CFR 1.18(e), the USPTO will issue a certificate of correction reflecting the PTA determination noted above.

Patentee should be aware that in order to preserve the right to review in the United States District Court for the District of Columbia of the USPTO patent term adjustment determination, patentee must ensure that he or she also take the steps required under 35 U.S.C. 154(b)(4)(A) in a timely manner. Nothing in the request for recalculation should be construed as providing an alternative time frame for commencing a civil action under 35 U.S.C. 154(b)(4)(A).

Any questions concerning this decision should be directed to the Office of Patent Legal Administration at 571-272-7702.

UNITED STATES PATENT AND TRADEMARK OFFICE

Commissioner for Patents
United States Patent and Trademark Office
P.O. Box 1450
Alexandria, VA 22313-1450
www.uspto.gov

LEWIS, BRISBOIS, BISGAARD & SMITH LLP
221 North Figueroa Street
Suite 1200
Los Angeles, CA 90012

OCT 29 2007

In re Application of:
WAZANA *et al.*
Serial No.: 11/799,350
Filed: May 01, 2007
Title: **SYSTEM AND METHOD FOR SEPARATING AND REPAIRING A LASER TONER CARTRIDGE**

DECISION ON PETITION TO MAKE SPECIAL FOR NEW APPLICATION UNDER 37 C.F.R. § 1.102 & M.P.E.P. § 708.02

This is a decision on the petition filed on October 24, 2007, to make the above-identified application special for accelerated examination procedure under 37 C.F.R. § 1.102(d).

The petition to make the application special is **DENIED**.

REGULATION AND PRACTICE

To be eligible for accelerated examination under 37 C.F.R. § 1.102(d) and pursuant to the "Change to Practice for Petitions in Patent Applications to Make Special and for Accelerated Examination" published in the Federal Register on June 26, 2006 (71 Fed. Reg. 36323), the following conditions must be satisfied:

1. The application must be a non-reissue utility or design application filed under 37 CFR 1.111(a);
2. The application, the petition and the required fees must be filed electronically using the USPTO's electronic filing system (EFS), or EFS-web; if not filed electronically, a statement asserting that EFS and EFS-web were not available during the normal business hours;
3. The application, at the time of filing, must be complete under 37 CFR 1.51 and in condition for examination;
4. The application must contain three or fewer independent claims and twenty or fewer total claims and the claims must be directed to a single invention.

The application as filed is not eligible for the accelerated examination under 37 C.F.R. § 1.102(d) because it was not complete under 37 CFR 1.51 and in condition for examination at the

time of filing. The mailing of a Notice to File Missing Parts of Nonprovisional Application on May 30, 2007, is evidence that the application was not complete and in condition for examination at the time of filing. In addition, the petition was not filed with the application.

For the above-stated reasons, the petition is denied. The application will therefore be taken up by the examiner for action in its regular turn.

Any inquiry regarding this decision should be directed to Clayton E. LaBalle, at (571) 272-1594.

Clayton E. LaBalle, TQAS
Technology Center 2800

UNITED STATES PATENT AND TRADEMARK OFFICE

Commissioner for Patents
United States Patent and Trademark Office
P.O. Box 1450
Alexandria, VA 22313-1450
www.uspto.gov

FISH & RICHARDSON PC
P.O. BOX 1022
MINNEAPOLIS, MN 55440-1022

MAILED

JUL 08 2010

OFFICE OF PETITIONS

In re Application of :
Nobuyuki Miyasaka et al :
Application No. 11/799,353 :
Filed: May 1, 2007 :
Attorney Docket No. 14875-103002/C1-109PCT-US

ON PETITION

This is a decision on the petition, filed July 7, 2010 under 37 CFR 1.313(c)(2) to withdraw the above-identified application from issue after payment of the issue fee.

The petition is **GRANTED**.

The above-identified application is withdrawn from issue for consideration of a submission under 37 CFR 1.114 (request for continued examination). See 37 CFR 1.313(c)(2).

Petitioner is advised that the issue fee paid on May 28, 2010 in the above-identified application cannot be refunded. If, however, the above-identified application is again allowed, petitioner may request that it be applied towards the issue fee required by the new Notice of Allowance.[1]

Telephone inquiries should be directed to Irvin Dingle at (571) 272-3210.

This matter is being referred to Technology Center AU 1632 for processing of the request for continued examination under 37 CFR 1.114 and for consideration of the concurrently filed Information Disclosure Statement.

/Irvin Dingle/
Irvin Dingle
Petitions Examiner
Office of Petitions

---

[1] The request to apply the issue fee to the new Notice may be satisfied by completing and returning the new Issue Fee Transmittal Form PTOL-85(b), which includes the following language thereon: Commissioner for Patents is requested to apply the Issue Fee and Publication Fee (if any) or re-apply any previously paid issue fee to the application identified above. Petitioner is advised that, whether a fee is indicated as being due or not, the Issue Fee Transmittal Form **must** be completed and timely submitted to avoid abandonment. Note the language in bold text on the first page of the Notice of Allowance and Fee(s) Due (PTOL-85).

UNITED STATES PATENT AND TRADEMARK OFFICE

Commissioner for Patents
United States Patent and Trademark Office
P.O. Box 1450
Alexandria, VA 22313-1450
www.uspto.gov

Paper No.

KIMBERLY-CLARK
WORLDWIDE, INC.
Catherine E. Wolf
401 NORTH LAKE STREET
NEENAH WI 54956

COPY MAILED

SEP 30 2008

OFFICE OF PETITIONS

In re Application of	:	
Collins et al.	:	DECISION ON PETITION
Application No. 11/799,356	:	
Filed: April 30, 2007	:	
Atty Docket No. 64124152US01	:	

This is a decision on the "Petition Pursuant to 37 C.F.R. 1.182," filed March 10, 2008. Receipt of the status inquiry filed August 18, 2008 is acknowledged.

Applicant petitions for the correction of the name of the fourth-listed inventor in the above-identified application. Pursuant to MPEP 605.04(b), applicant requests correction of inventor Tippey's name from David Dean Tippey to Darold Dean Tippey. Applicant states that the name was incorrectly typed as David Dean Tippey, but correctly signed by the inventor as Darold Dean Tippey. The petition includes payment of the fee under 37 CFR 1.182.

The petition is **GRANTED**.

The inventor's name is changed in the records of the Office to "Darold Dean Tippey."

The fee of $400 for consideration of the petition was again charged on filing of the status inquiry on August 18, 2008. This duplicate payment is being refunded to Deposit Account No. 11-0875, as authorized.

Technology Center AU 3761 has been advised of this decision. The application is thereby forwarded to the Technology Center for examination in due course.

Telephone inquiries concerning this decision should be directed to the undersigned at (571) 272-3219.

Nancy Johnson
Senior Petitions Attorney
Office of Petitions

Enclosure: Corrected Filing Receipt

UNITED STATES PATENT AND TRADEMARK OFFICE

UNITED STATES DEPARTMENT OF COMMERCE
United States Patent and Trademark Office
Address: COMMISSIONER FOR PATENTS
P.O. Box 1450
Alexandria, Virginia 22313-1450
www.uspto.gov

APPLICATION NUMBER	FILING or 371(c) DATE	GRP ART UNIT	FIL FEE REC'D	ATTY.DOCKET.NO	TOT CLAIMS	IND CLAIMS
11/799,356	04/30/2007	3761	1280	64124152US01	23	3

CONFIRMATION NO. 4534

CORRECTED FILING RECEIPT

23556
KIMBERLY-CLARK WORLDWIDE, INC.
Catherine E. Wolf
401 NORTH LAKE STREET
NEENAH, WI 54956

OC000000032314319

Date Mailed: 09/29/2008

Receipt is acknowledged of this non-provisional patent application. The application will be taken up for examination in due course. Applicant will be notified as to the results of the examination. Any correspondence concerning the application must include the following identification information: the U.S. APPLICATION NUMBER, FILING DATE, NAME OF APPLICANT, and TITLE OF INVENTION. Fees transmitted by check or draft are subject to collection. Please verify the accuracy of the data presented on this receipt. **If an error is noted on this Filing Receipt, please submit a written request for a Filing Receipt Correction. Please provide a copy of this Filing Receipt with the changes noted thereon. If you received a "Notice to File Missing Parts" for this application, please submit any corrections to this Filing Receipt with your reply to the Notice. When the USPTO processes the reply to the Notice, the USPTO will generate another Filing Receipt incorporating the requested corrections**

Applicant(s)

Meghan Elizabeth Collins, Palatine, IL;
Richard Dickerson Mosbacher, Neenah, WI;
Andrew Mark Long, Appleton, WI;
Darold Dean Tippey, Brunswick, GA;
Shirlee Ann Weber, Neenah, WI;
Jessica Sara Van Handel, Menasha, WI;

Power of Attorney: The patent practitioners associated with Customer Number 23556

Domestic Priority data as claimed by applicant

Foreign Applications

If Required, Foreign Filing License Granted: 05/24/2007

The country code and number of your priority application, to be used for filing abroad under the Paris Convention, is **US 11/799,356**

Projected Publication Date: 10/30/2008

Non-Publication Request: No

Early Publication Request: No

Title

Absorbent article featuring leakage warning

Preliminary Class

604

PROTECTING YOUR INVENTION OUTSIDE THE UNITED STATES

Since the rights granted by a U.S. patent extend only throughout the territory of the United States and have no effect in a foreign country, an inventor who wishes patent protection in another country must apply for a patent in a specific country or in regional patent offices. Applicants may wish to consider the filing of an international application under the Patent Cooperation Treaty (PCT). An international (PCT) application generally has the same effect as a regular national patent application in each PCT-member country. The PCT process **simplifies** the filing of patent applications on the same invention in member countries, but **does not result** in a grant of "an international patent" and does not eliminate the need of applicants to file additional documents and fees in countries where patent protection is desired.

Almost every country has its own patent law, and a person desiring a patent in a particular country must make an application for patent in that country in accordance with its particular laws. Since the laws of many countries differ in various respects from the patent law of the United States, applicants are advised to seek guidance from specific foreign countries to ensure that patent rights are not lost prematurely.

Applicants also are advised that in the case of inventions made in the United States, the Director of the USPTO must issue a license before applicants can apply for a patent in a foreign country. The filing of a U.S. patent application serves as a request for a foreign filing license. The application's filing receipt contains further information and guidance as to the status of applicant's license for foreign filing.

Applicants may wish to consult the USPTO booklet, "General Information Concerning Patents" (specifically, the section entitled "Treaties and Foreign Patents") for more information on timeframes and deadlines for filing foreign patent applications. The guide is available either by contacting the USPTO Contact Center at 800-786-9199, or it can be viewed on the USPTO website at http://www.uspto.gov/web/offices/pac/doc/general/index.html.

For information on preventing theft of your intellectual property (patents, trademarks and copyrights), you may wish to consult the U.S. Government website, http://www.stopfakes.gov. Part of a Department of Commerce initiative, this website includes self-help "toolkits" giving innovators guidance on how to protect intellectual property in specific countries such as China, Korea and Mexico. For questions regarding patent enforcement issues, applicants may call the U.S. Government hotline at 1-866-999-HALT (1-866-999-4158).

LICENSE FOR FOREIGN FILING UNDER

Title 35, United States Code, Section 184

Title 37, Code of Federal Regulations, 5.11 & 5.15

GRANTED

The applicant has been granted a license under 35 U.S.C. 184, if the phrase "IF REQUIRED, FOREIGN FILING LICENSE GRANTED" followed by a date appears on this form. Such licenses are issued in all applications where the conditions for issuance of a license have been met, regardless of whether or not a license may be required as

set forth in 37 CFR 5.15. The scope and limitations of this license are set forth in 37 CFR 5.15(a) unless an earlier license has been issued under 37 CFR 5.15(b). The license is subject to revocation upon written notification. The date indicated is the effective date of the license, unless an earlier license of similar scope has been granted under 37 CFR 5.13 or 5.14.

This license is to be retained by the licensee and may be used at any time on or after the effective date thereof unless it is revoked. This license is automatically transferred to any related applications(s) filed under 37 CFR 1.53(d). This license is not retroactive.

The grant of a license does not in any way lessen the responsibility of a licensee for the security of the subject matter as imposed by any Government contract or the provisions of existing laws relating to espionage and the national security or the export of technical data. Licensees should apprise themselves of current regulations especially with respect to certain countries, of other agencies, particularly the Office of Defense Trade Controls, Department of State (with respect to Arms, Munitions and Implements of War (22 CFR 121-128)); the Bureau of Industry and Security, Department of Commerce (15 CFR parts 730-774); the Office of Foreign AssetsControl, Department of Treasury (31 CFR Parts 500+) and the Department of Energy.

NOT GRANTED

No license under 35 U.S.C. 184 has been granted at this time, if the phrase "IF REQUIRED, FOREIGN FILING LICENSE GRANTED" DOES NOT appear on this form. Applicant may still petition for a license under 37 CFR 5.12, if a license is desired before the expiration of 6 months from the filing date of the application. If 6 months has lapsed from the filing date of this application and the licensee has not received any indication of a secrecy order under 35 U.S.C. 181, the licensee may foreign file the application pursuant to 37 CFR 5.15(b).

UNITED STATES PATENT AND TRADEMARK OFFICE

Commissioner for Patents
United States Patent and Trademark Office
P.O. Box 1450
Alexandria, VA 22313-1450
www.uspto.gov

MICROSOFT CORPORATION
ONE MICROSOFT WAY
REDMOND WA 98052

MAILED

APR 02 2010

OFFICE OF PETITIONS

In re Application of	:	
Kumar H. Chellapilla et al	:	
Application No. 11/799,370	:	DECISION GRANTING PETITION
Filed: May 1, 2007	:	UNDER 37 CFR 1.313(c)(2)
Attorney Docket No. 320389.01	:	

This is a decision on the petition under 37 CFR 1.313(c)(2), filed April 1, 2010, to withdraw the above-identified application from issue after payment of the issue fee.

The petition is **GRANTED**.

The above-identified application is withdrawn from issue for consideration of a submission under 37 CFR 1.114 (request for continued examination). *See* 37 CFR 1.313(c)(2).

Petitioner is advised that the issue fee paid on March 16, 2010 cannot be refunded. If, however, this application is again allowed, petitioner may request that it be applied towards the issue fee required by the new Notice of Allowance.[1]

Telephone inquiries should be directed to the undersigned at (571) 272-3208.

This application is being referred to Technology Center AU 2162 for processing of the request for continued examination under 37 CFR 1.114 and for consideration of the concurrently filed IDS.

/Karen Creasy/
Karen Creasy
Petitions Examiner
Office of Petitions

[1] *The request to apply the issue fee to the new Notice may be satisfied by completing and returning the new Part B – Fee(s) Transmittal Form (along with any balance due at the time of submission). Petitioner is advised that the Issue Fee Transmittal Form must be completed and timely submitted to avoid abandonment of the application.*

UNITED STATES PATENT AND TRADEMARK OFFICE

COMMISSIONER FOR PATENTS
UNITED STATES PATENT AND TRADEMARK OFFICE
P.O. BOX 1450
ALEXANDRIA, VA 22313-1450
www.uspto.gov

RYNDAK & SURI LLP
200 W. MADISON STREET
SUITE 2100
CHICAGO IL 60606

MAILED

MAY 19 2009

OFFICE OF PETITIONS

Applicant: Chincilla
Appl. No.: 11/799,416
Filing Date: May 1, 2007
Title: REAGENT, SYSTEM AND METHOD FOR NITRATE ANALYSIS
Attorney Docket: 40283-10500
Pub. No.: US 2008/0274551 A1
Pub. Date: November 6, 2008

This is a decision on the request for a corrected patent application publication under 37 CFR 1.221(b), received on December 1, 2008, for the above-identified application.

The request is DISMISSED.

Applicant requests that the application be republished because the patent application publication contains a material error in the claims and in the specification, as the word "colorimetric" appears as "calorimetric" in many instances.

37 CFR 1.221 (b) is applicable "only when the Office makes a material mistake which is apparent from Office records. Any request for a corrected publication or revised patent application publication other than provided as provided in paragraph (a) of this section must be filed within two months from the date of the patent application publication. This period is not extendable." A material mistake must affect the public's ability to appreciate the technical disclosure of the patent application publication, to determine the scope of the patent application publication, or to determine the scope of the provisional rights that an applicant may seek to enforce upon issuance of a patent. [1]

The errors noted by applicant may be Office errors, but they are not material Office errors under 37 CFR 1.221. The misprint does not affect the understanding of the application. The mistakes do not affect the public's ability to appreciate the technical disclosure of the patent application publication, or determine the scope of the patent application publication or determine the scope of the provisional rights that an applicant may seek to enforce upon issuance of a patent. A member of the public can understand the claim from the specification and remaining claims.

[1] Changes to Implement Eighteen-Month Publication of Patent Applications, 65 FR 57023, 57038 (Sept. 20, 2000), 1239, Off. Gaz. Pat. Office Notices 63, 75 (Oct. 10, 2000) (final rule).

The applicant is advised that a "request for republication of an application previously published" may be filed under 37 CFR 1.221 (a). Such a request for republication "must include a copy of the application compliance with the Office's electronic filing system requirements and be accompanied by the publication fee set forth in § 1.18 (d) and the processing fee set forth in § 1.17 (i)." If the request for republication does not comply with the electronic filing system requirements, the republication will not take place and the publication fee set forth in § 1.18 (d) will be refunded. The processing fee will be retained.

A guide for filing a request for a Pre-Grant Publication, such as a request for republication, may be found on the link below:

http://www.uspto.gov/ebc/portal/tutorials.htm

Any request for republication under 37 CFR 1.221(a), must be submitted via the EFS system, as a "Pre-Grant Publication" and questions or request for reconsideration of the decision, should be addressed as follows:

By mail to: Mail Stop PGPUB
Commissioner for Patents
P.O. Box 1450
Alexandria, Va. 22313-1450

Inquiries relating to this matter may be directed to Mark Polutta at (571) 272-7709.

Mark Polutta
Senior Legal Advisor
Office of Patent Legal Administration
Office of the Deputy Commissioner
for Patent Examination Policy

UNITED STATES PATENT AND TRADEMARK OFFICE

UNITED STATES DEPARTMENT OF COMMERCE
United States Patent and Trademark Office
Address: COMMISSIONER FOR PATENTS
P.O. Box 1450
Alexandria, Virginia 22313-1450
www.uspto.gov

KIMBERLY-CLARK WORLDWIDE, INC.
Tara Pohlkotte
2300 Winchester Rd.
NEENAH, WI 54956

Mail Date: 04/21/2010

Applicant	: Nathan John Vogel	: DECISION ON REQUEST FOR
Patent Number	: 7585797	: RECALCULATION of PATENT
Issue Date	: 09/08/2009	: TERM ADJUSTMENT IN VIEW
Appliction No	: 11/799,420	: OF WYETH AND NOTICE OF INTENT TO
Filed	: 04/30/2007	: ISSUE CERTIFICATE OF CORRECTION
		:

The Request for Recalculation is **GRANTED** to the extent indicated.

The patent term adjustment has been determined to be **330** days. The USPTO will *sua sponte* issue a certificate of correction reflecting the amount of PTA days determined by the recalculation.

Prior to the issuance of the certificate of correction, the USPTO will afford patentee an opportunity to be heard and request reconsideration. Accordingly, patentee has **one month or thirty (30) days**, whichever is longer, to file a request for reconsideration of this patent term adjustment calculation. See 35 U.S.C. 154(b)(3)(B)(ii) and 37 CFR 1.322(a)(4). No extensions of time will be granted under 37 CFR 1.136.

Patentee should use document code PET.OP if electronically filing a request for reconsideration of this patent term adjustment calculation. The patentee must also include the information required by 37 CFR 1.705(b)(2) and the fee required by 37 CFR 1.18(e). If patentee does not file a timely request for reconsideration of this patent term adjustment calculation including the information required by 37 CFR 1.705(b)(2) and the fee required by 37 CFR 1.18(e), the USPTO will issue a certificate of correction reflecting the PTA determination noted above.

Patentee should be aware that in order to preserve the right to review in the United States District Court for the District of Columbia of the USPTO patent term adjustment determination, patentee must ensure that he or she also take the steps required under 35 U.S.C. 154(b)(4)(A) in a timely manner. Nothing in the request for recalculation should be construed as providing an alternative time frame for commencing a civil action under 35 U.S.C. 154(b)(4)(A).

Any questions concerning this decision should be directed to the Office of Patent Legal Administration at 571-272-7702.

UNITED STATES PATENT AND TRADEMARK OFFICE

Commissioner for Patents
United States Patent and Trademark Office
P.O. Box 1450
Alexandria, VA 22313-1450
www.uspto.gov

DAVID R. GILDEA
MENLO PATENT AGENCY, LLC
435 HERMOSA WAY
MENLO PARK, CA 94025

COPY MAILED

MAR 3 1 2008

In re Application of	:	
HEFFNER, et al.	:	
Application No. 11/799,435	:	DECISION ON PETITION
Filed: May 7, 2007	:	TO WITHDRAW
Attorney Docket No. **23271-017001/STR411**	:	FROM RECORD
	:	

This is a decision on the Request to Withdraw as attorney or agent of record under 37 C.F.R. § 1.36(b), filed October 1, 2007.

The request is **NOT APPROVED** as moot.

A review of the file record indicates that the power of attorney to **MENLO PATENT AGENCY, LLC** has been revoked by the assignee of the patent application on December 14, 2007. Accordingly, the request to withdraw under 37 C.F.R. § 1.36(b) is moot.

All future communications from the Office will continue to be directed to the below-listed address until otherwise notified by applicant.

Telephone inquires concerning this decision should be directed to the undersigned at 571-272-7253.

Monica A. Graves
Petitions Examiner
Office of Petitions

cc: **FISH & RICHARDSON, PC**
P.O. BOX 1022
MINNEAPOLIS, MN 55440-1022

UNITED STATES PATENT AND TRADEMARK OFFICE

Commissioner for Patents
United States Patent and Trademark Office
P.O. Box 1450
Alexandria, VA 22313-1450
www.uspto.gov

COPY MAILED

OCT 15 2007

OFFICE OF PETITIONS

Gerald W. Maliszewski
P.O. Box 270829
San Diego CA 92198-2829

In re Application of	:	
SGOUROS, KOPZON, and HALEVY	:	DECISION GRANTING STATUS
Application No. 11/799,438	:	UNDER 37 CFR 1.47(a)
Filed: 05/01/2007	:	
Attorney Docket No. applied_196	:	
Title: CHANNEL SERVICE MANAGER WITH	:	
PRIORITY QUEUING	:	

This is in response to the petition under 37 CFR 1.47(a), filed June 15, 2007.

The petition is **GRANTED**.

Petitioners have shown that after diligent efforts they could not locate the non-signing inventors to join in the filing of the above-identified application.

The application and papers have been reviewed and found in compliance with 37 CFR 1.47(a). This application is hereby accorded Rule 1.47(a) status.

As provided in 37 CFR 1.47(c), this Office will forward notice of this application's filing to the non-signing inventors at the addresses given in the petition. Notice of the filing of this application will also be published in the Official Gazette.

The current fee for filing a petition under 37 CFR 1.47(a) is $200.00; however, petitioners submitted a payment of $130.00. The Office will charge the difference of $70.00 to the Deposit Account as previously authorized.

This application is being referred to Technology Center 2616 for examination in due course.

Telephone inquiries regarding this decision should be directed to the undersigned at (571) 272-3211.

Christina Tartera Donnell

Christina Tartera Donnell
Senior Petitions Attorney
Office of Petitions

UNITED STATES PATENT AND TRADEMARK OFFICE

Commissioner for Patents
United States Patent and Trademark Office
P.O. Box 1450
Alexandria, VA 22313-1450
www.uspto.gov

Noam Halevy
Hanesim 44/6
Raanana, Israel

COPY MAILED

OCT 15 2007

OFFICE OF PETITIONS

In re Application of SGOUROS, KOPZON, and HALEVY Application No. 11/799,438 Filed: 05/01/2007 Attorney Docket No. applied_196 Title: CHANNEL SERVICE MANAGER WITH PRIORITY QUEUING	: : : : : : :	LETTER

Dear Mr. Halevy:

You are named as a joint inventor in the above-identified United States patent application, filed under the provisions of 35 U.S.C. 116 (United States Code), and 37 CFR 1.47(a), Rules of Practice in Patent Cases. Should a patent be granted on the application you will be designated therein as a joint inventor.

As a named inventor you are entitled to inspect any paper in the file wrapper of the application, order copies of all or any part thereof (at a prepaid cost per 37 CFR 1.19) or make your position of record in the application. Alternatively, you may arrange to do any of the preceding through a registered patent attorney or agent presenting written authorization from you. If you care to join the application, counsel of record (see below) would presumably assist you. Joining the application would entail the filing of an appropriate oath or declaration by you pursuant to 37 CFR 1.63.

Requests for information regarding your application should be directed to the File Information Unit at (703) 308-2733. Information regarding how to pay for and order a copy of the application, or a specific paper in the application, should be directed to the Certification Division at (571) 272-3150 or (800) 972-6382 (outside the Washington, DC area).

Christina Tartera Donnell

Christina Tartera Donnell
Senior Petitions Attorney
Office of Petitions

Cc: Gerald W. Maliszewski
P.O. Box 270829
San Diego CA 92198-2829

UNITED STATES PATENT AND TRADEMARK OFFICE

Commissioner for Patents
United States Patent and Trademark Office
P.O. Box 1450
Alexandria, VA 22313-1450
www.uspto.gov

COPY MAILED

OCT 15 2007

OFFICE OF PETITIONS

Vladislav Kopzon
Saleit 1
Haifa, Israel

In re Application of	:	
SGOUROS, KOPZON, and HALEVY	:	
Application No. 11/799,438	:	LETTER
Filed: 05/01/2007	:	
Attorney Docket No. applied_196	:	
Title: CHANNEL SERVICE MANAGER WITH	:	
PRIORITY QUEUING	:	

Dear Mr. Kopzon:

You are named as a joint inventor in the above-identified United States patent application, filed under the provisions of 35 U.S.C. 116 (United States Code), and 37 CFR 1.47(a), Rules of Practice in Patent Cases. Should a patent be granted on the application you will be designated therein as a joint inventor.

As a named inventor you are entitled to inspect any paper in the file wrapper of the application, order copies of all or any part thereof (at a prepaid cost per 37 CFR 1.19) or make your position of record in the application. Alternatively, you may arrange to do any of the preceding through a registered patent attorney or agent presenting written authorization from you. If you care to join the application, counsel of record (see below) would presumably assist you. Joining the application would entail the filing of an appropriate oath or declaration by you pursuant to 37 CFR 1.63.

Requests for information regarding your application should be directed to the File Information Unit at (703) 308-2733. Information regarding how to pay for and order a copy of the application, or a specific paper in the application, should be directed to the Certification Division at (571) 272-3150 or (800) 972-6382 (outside the Washington, DC area).

Christina Tartera Donnell

Christina Tartera Donnell
Senior Petitions Attorney
Office of Petitions

Cc: Gerald W. Maliszewski
P.O. Box 270829
San Diego CA 92198-2829

UNITED STATES PATENT AND TRADEMARK OFFICE

Commissioner for Patents
United States Patent and Trademark Office
P.O. Box 1450
Alexandria, VA 22313-1450
www.uspto.gov

SCHEIN & CAI LLP
James Cai
111 W. ST. JOHN ST.
SUITE 1250
SAN JOSE CA 95113

MAILED

MAY 29 2009

OFFICE OF PETITIONS

In re Application of	:	
Ming Sun, et al.	:	
Application No. 11/799,467	:	DECISION GRANTING PETITION
Filed: April 30, 2007	:	UNDER 37 CFR 1.313(c)(2)
Attorney Docket No. AOS25I08	:	

This is a decision on the petition under 37 CFR 1.313(c)(2), filed May 28, 2009, to withdraw the above-identified application from issue after payment of the issue fee.

The petition is **GRANTED**.

The above-identified application is withdrawn from issue for consideration of a submission under 37 CFR 1.114 (request for continued examination). *See* 37 CFR 1.313(c)(2).

Petitioner is advised that the issue fee paid on April 23, 2009 cannot be refunded. If, however, this application is again allowed, petitioner may request that it be applied towards the issue fee required by the new Notice of Allowance.[1]

Telephone inquiries should be directed to Terri Williams at (571) 272-2991.

This application is being referred to Technology Center AU 2822 for processing of the request for continued examination under 37 CFR 1.114 and for consideration of the concurrently filed information disclosure statement.

Terri Williams
Terri Williams
Petitions Examiner
Office of Petitions

---

[1] *The request to apply the issue fee to the new Notice may be satisfied by completing and returning the new Part B – Fee(s) Transmittal Form (along with any balance due at the time of submission). Petitioner is advised that the Issue Fee Transmittal Form* ***must*** *be completed and timely submitted to avoid abandonment of the application.*

UNITED STATES PATENT AND TRADEMARK OFFICE

UNITED STATES DEPARTMENT OF COMMERCE
United States Patent and Trademark Office
Address: COMMISSIONER FOR PATENTS
P.O. Box 1450
Alexandria, Virginia 22313-1450
www.uspto.gov

APPLICATION NO.	FILING DATE	FIRST NAMED INVENTOR	ATTORNEY DOCKET NO.	CONFIRMATION NO.
11/799,498	05/01/2007	Mark Hoffman	23952-0346	6436

7590 03/20/2008

SUTHERLAND II
SUTHERLAND, ASBILL & BRENNAN, LLC
999 PEACHTREE STREET
ATLANTA, GA 30309

EXAMINER
NGUYEN, NGA B

ART UNIT	PAPER NUMBER
3692	

MAIL DATE	DELIVERY MODE
03/20/2008	PAPER

DECISION GRANTING PETITION UNDER 37 CFR 1.138(d)

The declaration of express abandonment is recognized

This is in response to the petition under 37 CFR 1.138(d), requesting for a refund of any previously paid search fee and excess claims fee in the above-identified application.

The petition is granted.

The express abandonment is recognized. Any previously paid search fee and excess claims fee are hereby refunded.

Telephone inquiries should be directed to the Office of Data Management at (571) 272-4200.

Nioni Harmes

Patent Publication Branch
Office of Data Management

```
Adjustment date: 03/21/2008  KKING1
05/04/2007 EHAILE1  00000009 11799498
02 FC:2111                    -250.00 OP
04 FC:2201                    -700.00 OP
05 FC:2202                    -900.00 OP
```

```
Repln._Ref: 03/21/2008 KKING1   0010135300
DA#:195029   Name/Number:11799498
FC: 9204                    $1850.00 CR
```


FORM PET651G (Rev. 08/07)

UNITED STATES PATENT AND TRADEMARK OFFICE

Commissioner for Patents
United States Patent and Trademark Office
P.O. Box 1450
Alexandria, VA 22313-1450
www.uspto.gov

Peter Loffler
P.O. Box 1001
Niceville, FL 32588-1001

COPY MAILED

JUL 07 2008

In re Application of	:	
David L. Herndon	:	
Application No. 11/799,529	:	DECISION ON PETITION
Filed: May 1, 2007	:	TO WITHDRAW
Attorney Docket No. 376518	:	FROM RECORD
	:	

This is a decision on the Request to Withdraw as attorney or agent under 37 C.F.R. § 1.36(b) or 37 C.F.R. § 10.40 filed May 16, 2008.

The request is **APPROVED**.

A grantable request to withdraw as attorney/agent of record must be signed by every attorney/agent seeking to withdraw or contain a clear indication that one attorney is signing on behalf of another/others. A request to withdraw will not be approved unless at least 30 (thirty) days would remain between the date of approval and the later of the expiration date of a time to file a response or the expiration date of the maximum time period which can be extended under 37 C.F.R. § 1.136(a).

All future correspondence will be mailed to the applicant.

Applicant is reminded that there is no attorney of record at this time.

Telephone inquires concerning this decision should be directed to Kimberly Inabinet at 571-272-4618.

Kimberly Inabinet
Petitions Examiner
Office of Petitions

cc: David L. Herndon
118 Berger Place NE
Fort Walton Beach, FL 32548

UNITED STATES PATENT AND TRADEMARK OFFICE

UNITED STATES DEPARTMENT OF COMMERCE
United States Patent and Trademark Office
Address: COMMISSIONER FOR PATENTS
P.O. Box 1450
Alexandria, Virginia 22313-1450
www.uspto.gov

APPLICATION NUMBER	FILING OR 371(C) DATE	FIRST NAMED APPLICANT	ATTY. DOCKET NO./TITLE
11/799,529	05/01/2007	David L. Herndon	376518

CONFIRMATION NO. 5751

POWER OF ATTORNEY NOTICE

Peter Loffler
P.O. Box 1001
Niceville, FL 32588-1001

OC000000030816626

Date Mailed: 07/07/2008

NOTICE REGARDING CHANGE OF POWER OF ATTORNEY

This is in response to the Power of Attorney filed 05/16/2008.

- The withdrawal as attorney in this application has been accepted. Future correspondence will be mailed to the new address of record. 37 CFR 1.33.

/kainabinet/

Office of Data Management, Application Assistance Unit (571) 272-4000, or (571) 272-4200, or 1-888-786-0101

UNITED STATES PATENT AND TRADEMARK OFFICE

Commissioner for Patents
United States Patent and Trademark Office
P.O. Box 1450
Alexandria, VA 22313-1450
www.uspto.gov

STETINA BRUNDA GARRED & BRUCKER
75 ENTERPRISE, SUITE 250
ALISO VIEJO, CA 92656

MAILED

MAY 28 2009

OFFICE OF PETITIONS

In re Application of	:	
Mehdi Hatamian, et al.	:	
Application No. 11/799,566	:	DECISION ON PETITION
Filed: May 2, 2007	:	TO WITHDRAW
Attorney Docket No. MTRIC-004A	:	FROM RECORD
	:	

This is a decision on the Request to Withdraw as attorney or agent of record under 37 C.F.R. § 1.36(b), filed April 9, 2009.

The request is **APPROVED**.

A grantable request to withdraw as attorney/agent of record must be signed by every attorney/agent seeking to withdraw or contain a clear indication that one attorney is signing on behalf of another/others.

The request was signed by Matthew A. Newboles on behalf of all attorneys of record who are associated with customer No. 07663. All attorneys/agents associated with the Customer Number 07663 have been withdrawn. Applicant is reminded that there is no attorney of record at this time.

The request to change the correspondence of record is not acceptable as the requested correspondence address is not that of: (1) the first named signing inventor; or (2) an intervening assignee of the entire interest under 37 C.F.R 3.71. All future communications from the Office will be directed to the first named signing inventor at the first copied address below until otherwise properly notified by the applicant.

There is an outstanding Office action mailed December 17, 2009 that requires a reply from the applicant.

Telephone inquiries concerning this decision should be directed to undersigned at 571-272-1642. All other inquiries concerning the examination or status of this application should be directed to the Technology Center.

/AMW/
April M. Wise
Petitions Examiner
Office of Petitions

cc: MEHDI HATAMIAN
31731 CAPUCHINA WAY
COTO DE CAZA, CA 92679

cc: MEHRTOSH GHALEBI
METRICS, LLC
15210 DESMAN ROAD
LA MIRADA, CA 90638

UNITED STATES PATENT AND TRADEMARK OFFICE

UNITED STATES DEPARTMENT OF COMMERCE
United States Patent and Trademark Office
Address: COMMISSIONER FOR PATENTS
P.O. Box 1450
Alexandria, Virginia 22313-1450
www.uspto.gov

APPLICATION NUMBER	FILING OR 371(C) DATE	FIRST NAMED APPLICANT	ATTY. DOCKET NO./TITLE
11/799,566	05/02/2007	Mehdi Hatamian	MTRIC-004A

CONFIRMATION NO. 9051

POWER OF ATTORNEY NOTICE

7663
STETINA BRUNDA GARRED & BRUCKER
75 ENTERPRISE, SUITE 250
ALISO VIEJO, CA 92656

OC000000035968728

Date Mailed: 05/14/2009

NOTICE REGARDING CHANGE OF POWER OF ATTORNEY

This is in response to the Power of Attorney filed 04/09/2009.

- The withdrawal as attorney in this application has been accepted. Future correspondence will be mailed to the new address of record. 37 CFR 1.33.

/amwise/

Office of Data Management, Application Assistance Unit (571) 272-4000, or (571) 272-4200, or 1-888-786-0101

SPE RESPONSE FOR CERTIFICATE OF CORRECTION

Paper No.: _____

DATE : 05/11/10

TO SPE OF : ART UNIT 2812

SUBJECT : Request for Certificate of Correction for Appl. No.: 11799572 Patent No.: 7692220

Please respond to this request for a certificate of correction within 7 days.

FOR IFW FILES:

Please review the requested changes/corrections as shown in the **COCIN** document(s) in the IFW application image. No new matter should be introduced, nor should the scope or meaning of the claims be changed.

Please complete the response (see below) and forward the completed response to scanning using document code **COCX**.

FOR PAPER FILES:

Please review the requested changes/corrections as shown in the attached certificate of correction. Please complete this form (see below) and forward it with the file to:

Certificates of Correction Branch (C of C)
Randolph Square 9D40-D
Palm Location 7580

You can fax the Directors/SPE response to 571-270-9990

Lamonte Newsome
Certificates of Correction Branch
703-756-1574

Thank You For Your Assistance

The request for issuing the above-identified correction(s) is hereby:
Note your decision on the appropriate box.

- ☒ **Approved** — **All** changes apply.
- ☐ **Approved in Part** — Specify below which changes **do not** apply.
- ☐ **Denied** — State the reasons for denial below.

Comments: _____

CHARLES D. GARBER
SUPERVISOR / PATENT EXAMINER
SPE

2812
Art Unit

UNITED STATES PATENT AND TRADEMARK OFFICE

UNITED STATES DEPARTMENT OF COMMERCE
United States Patent and Trademark Office
Address: COMMISSIONER FOR PATENTS
P.O. Box 1450
Alexandria, Virginia 22313-1450
www.uspto.gov

KENYON & KENYON LLP
ONE BROADWAY
NEW YORK, NY 10004

Mail Date: 04/21/2010

Applicant	: Joseph S. Hui	: DECISION ON REQUEST FOR
Patent Number	: 7590734	: RECALCULATION of PATENT
Issue Date	: 09/15/2009	: TERM ADJUSTMENT IN VIEW
Appliction No	: 11/799,592	: OF WYETH AND NOTICE OF INTENT TO
Filed	: 05/01/2007	: ISSUE CERTIFICATE OF CORRECTION
		:

The Request for Recalculation is **GRANTED** to the extent indicated.

The patent term adjustment has been determined to be **298** days. The USPTO will *sua sponte* issue a certificate of correction reflecting the amount of PTA days determined by the recalculation.

Prior to the issuance of the certificate of correction, the USPTO will afford patentee an opportunity to be heard and request reconsideration. Accordingly, patentee has **one month or thirty (30) days**, whichever is longer, to file a request for reconsideration of this patent term adjustment calculation. See 35 U.S.C. 154(b)(3)(B)(ii) and 37 CFR 1.322(a)(4). No extensions of time will be granted under 37 CFR 1.136.

Patentee should use document code PET.OP if electronically filing a request for reconsideration of this patent term adjustment calculation. The patentee must also include the information required by 37 CFR 1.705(b)(2) and the fee required by 37 CFR 1.18(e). If patentee does not file a timely request for reconsideration of this patent term adjustment calculation including the information required by 37 CFR 1.705(b)(2) and the fee required by 37 CFR 1.18(e), the USPTO will issue a certificate of correction reflecting the PTA determination noted above.

Patentee should be aware that in order to preserve the right to review in the United States District Court for the District of Columbia of the USPTO patent term adjustment determination, patentee must ensure that he or she also take the steps required under 35 U.S.C. 154(b)(4)(A) in a timely manner. Nothing in the request for recalculation should be construed as providing an alternative time frame for commencing a civil action under 35 U.S.C. 154(b)(4)(A).

Any questions concerning this decision should be directed to the Office of Patent Legal Administration at 571-272-7702.

UNITED STATES PATENT AND TRADEMARK OFFICE

Commissioner for Patents
United States Patent and Trademark Office
P.O. Box 1450
Alexandria, VA 22313-1450
www.uspto.gov

COPY MAILED

DEC 2 2 2008

OFFICE OF PETITIONS

ALAN CROSS
73-34 244TH STREET
LITTLE NECK NY 11362

In re Application of	:	
CROSS, Alan	:	
Application No. 11/799,600	:	DECISION ON PETITION
Filed: May 03, 2007	:	TO MAKE SPECIAL UNDER
Attorney Docket No.	:	37 CFR 1.102(c)(1)
	:	

This is a decision on the petition under 37 CFR 1.102(c)(1), filed November 20, 2008, to make the above-identified application special based on applicant's age as set forth in M.P.E.P. § 708.02, Section IV.

The petition is **GRANTED**.

A grantable petition to make an application special under 37 CFR 1.102(c)(1) and MPEP § 708.02, Section IV: Applicant's Age must be accompanied by evidence showing that at least one of the applicants is 65 years of age, or more, such as a birth certificate or a statement by applicant. No fee is required

The instant petition includes a statement by Alan Cross attesting that he is over 65 years of age. Accordingly, the above-identified application has been accorded "special" status.

Telephone inquiries concerning this decision should be directed to the undersigned at 571-272-4231.

All other inquiries concerning either the examination or status of the application should be directed to the Technology Center.

The application is being forwarded to the Technology Center Art Unit 3749 for action on the merits commensurate with this decision.

Michelle R. Eason

Michelle R. Eason
Paralegal Specialist
Office of Petitions

UNITED STATES PATENT AND TRADEMARK OFFICE

Commissioner for Patents
United States Patent and Trademark Office
P.O. Box 1450
Alexandria, VA 22313-1450
www.uspto.gov

Triangle Patents, P.L.L.C.
P.O. Box 28539
Raleigh, NC 27611-8539

COPY MAILED

JAN 07 2009

OFFICE OF PETITIONS

In re Application of	:	
Steve W. Schwartz et al.	:	
Application No. 11/799,617	:	DECISION ON PETITION
Filed: May 2, 2007	:	TO WITHDRAW
Attorney Docket No. 4031-001	:	FROM RECORD
	:	

This is a decision on the Request to Withdraw as attorney or agent of record under 37 C.F.R. § 1.36(b), filed November 21, 2008.

The request is **moot because a revocation of power of attorney has been filed.**

A review of the file record indicates that the power of attorney to JiNan Glasgow and all attorneys/agents associated with customer number 64843 have been revoked by the applicant of the patent application on November 24, 2008. Accordingly, the request to withdraw under 37 C.F.R. § 1.36(b) is moot.

All future communications from the Office will be directed to the below-listed address until otherwise notified by applicant.

Telephone inquires concerning this decision should be directed to Kimberly Inabinet at 571-272-4618.

Kimberly Inabinet
Petitions Examiner
Office of Petitions

cc: Flutrends International
Steve W. Schwartz, M.D.
830 Pinon Pine Road
Manitou Springs, CO 80829

UNITED STATES PATENT AND TRADEMARK OFFICE

UNITED STATES DEPARTMENT OF COMMERCE
United States Patent and Trademark Office
Address: COMMISSIONER FOR PATENTS
P.O. Box 1450
Alexandria, Virginia 22313-1450
www.uspto.gov

APPLICATION NUMBER	FILING OR 371(C) DATE	FIRST NAMED APPLICANT	ATTY. DOCKET NO./TITLE
11/799,617	05/02/2007	Steve W. Schwartz	4031-001

CONFIRMATION NO. 6025

POWER OF ATTORNEY NOTICE

64843
TRIANGLE PATENTS, P.L.L.C.
P.O. BOX 28539
RALEIGH, NC 27611-8539

OC000000033938127

Date Mailed: 01/07/2009

NOTICE REGARDING CHANGE OF POWER OF ATTORNEY

This is in response to the Power of Attorney filed 11/24/2008.

- The Power of Attorney to you in this application has been revoked by the applicant. Future correspondence will be mailed to the new address of record(37 CFR 1.33).

/kainabinet/

Office of Data Management, Application Assistance Unit (571) 272-4000, or (571) 272-4200, or 1-888-786-0101

UNITED STATES PATENT AND TRADEMARK OFFICE

Commissioner for Patents
United States Patent and Trademark Office
P.O. Box 1450
Alexandria, VA 22313-1450
www.uspto.gov

STETINA BRUNDA GARRED & BRUCKER
75 ENTERPRISE, SUITE 250
ALISO VIEJO, CA 92656

COPY MAILED

JUL 16 2009

OFFICE OF PETITIONS

In re Application of

Mehdi HATAMIAN, et al.
Application No. 11/799,622
Filed: May 2, 2007
Attorney Docket No. **MTRIC-003A**

DECISION ON PETITION TO WITHDRAW FROM RECORD

This is a decision on the Request to Withdraw as attorney or agent of record under 37 C.F.R. § 1.36(b), filed April 9, 2009.

The request is **APPROVED**.

A grantable request to withdraw as attorney/agent of record must be signed by every attorney/agent seeking to withdraw or contain a clear indication that one attorney is signing on behalf of another/others.

The request was signed by Matthew A. Newboles on behalf of all attorneys of record. All attorneys/agents associated have been withdrawn. Applicant is reminded that there is no attorney of record at this time.

All future communications from the Office will be directed to the first named signing inventor at the first copied address below until otherwise properly notified by the applicant.

The application issued into patent no. 7,559,204 on July 14, 2009.

Telephone inquiries concerning this decision should be directed to the undersigned at 571-272-7253.

/Monica A. Graves/
Petitions Examiner, Office of Petitions

cc: **MEHDI HATAMIAN**
31731 CAPUCHINA WAY
COTO DE CAZA, CA 92679

cc: **MEHRTOSH GHALEBI**
METRICS, LLC
15210 DESMAN ROAD
LA MIRADA, CA 90638

UNITED STATES PATENT AND TRADEMARK OFFICE

Commissioner for Patents
United States Patent and Trademark Office
P.O. Box 1450
Alexandria, VA 22313-1450
www.uspto.gov

EUGENIO J. TORRES
221 PLAZA BUILDING
PONCE DE LEON
SUITE 403
SAN JUAN, PR 00917

COPY MAILED

OCT 01 2007

OFFICE OF PETITIONS

In re Application of	:	
Bolivar Philippe Martineau	:	
Application No. 11/799,635	:	DECISION ON PETITION
Filed: May 1, 2007	:	TO MAKE SPECIAL UNDER
Attorney Docket No. ftmr 0297.001	:	37 CFR 1.102(c)(1)
	:	

This is a decision on the petition under 37 CFR 1.102(c)(1), filed June 25, 2007, to make the above-identified application special based on applicant's age as set forth in M.P.E.P. § 708.02, Section IV.

The petition is **GRANTED**.

A grantable petition to make an application special under 37 CFR 1.102(c)(1) and MPEP § 708.02, Section IV: Applicant's Age must be accompanied by evidence showing that at least one of the applicants is 65 years of age, or more, such as a birth certificate or a statement by applicant. No fee is required

The instant petition includes a copy of applicant's birth certificate. Accordingly, the above-identified application has been accorded "special" status.

Telephone inquiries concerning this decision should be directed to undersigned at 571-272-1642.

All other inquiries concerning either the examination or status of the application should be directed to the Technology Center.

The application is being forwarded to the Technology Center Art Unit 3711 for action on the merits commensurate with this decision.

April M. Wise
Petitions Examiner
Office of Petitions

UNITED STATES PATENT AND TRADEMARK OFFICE

JUN 2 6 2009

Commissioner for Patents
United States Patent and Trademark Office
P.O. Box 1450
Alexandria, VA 22313-1450
www.uspto.gov

MORRISON & FOERSTER LLP
12531 HIGH BLUFF DRIVE
SUITE 100
SAN DIEGO CA 92130-2040

In re Application of :
Cantor et al.
Serial No.: 11/799,726
Filed: May 1, 2007
Attorney Docket No.: **532212000610**

: PETITION DECISION

This is in response to the petition under 37 CFR § 1.59(b), filed June 19, 2009, to expunge information from the above identified application. This application has not been allowed

Petitioner requests that the Information Disclosure Statement, June 19, 2009 containing documents subject to protective order and a proprietary document be expunged from the record. Petitioner states either: (A) that the information contains trade secret material, proprietary material and/or material that is subject to a protective order which has not been made public; or (B) that the information submitted was unintentionally submitted and the failure to obtain its return would cause irreparable harm to the party who submitted the information or to the party in interest on whose behalf the information was submitted, and the information has not otherwise been made public. The petition fee set forth in 37 CFR § 1.17(g) has been paid.

This application is under non-final action. Also, the information provided has not been reviewed. As stated in M.P.E.P. 724, upon allowance or other action closing prosecution in an application, petition may be made for return of Proprietary information. The information cannot be expunged at this time.

The petition is **DISMISSED**. Petitioner may resubmit the petition subsequent to a Notice of Allowability or *ex parte Quayle* action being mailed in the application. No additional petition fee will be required at that time

Should there be any questions about this decision please contact Marianne C. Seidel by letter addressed to Director, TC 1600, at the address listed above, or by telephone at 571-272-0584 or by facsimile sent to the general Office facsimile number, 703-872-9306.

Marianne C. Seidel
Quality Assurance Specialist
Technology Center 1600

UNITED STATES PATENT AND TRADEMARK OFFICE

UNITED STATES DEPARTMENT OF COMMERCE
United States Patent and Trademark Office
Address: COMMISSIONER FOR PATENTS
P.O. Box 1450
Alexandria, Virginia 22313-1450
www.uspto.gov

APPLICATION NO.	FILING DATE	FIRST NAMED INVENTOR	ATTORNEY DOCKET NO.	CONFIRMATION NO.
11/799,726	05/01/2007	Thomas L. Cantor	532212000610	6258

25225 7590 11/09/2009
MORRISON & FOERSTER LLP
12531 HIGH BLUFF DRIVE
SUITE 100
SAN DIEGO, CA 92130-2040

EXAMINER
CHEU, CHANGHWA J

ART UNIT	PAPER NUMBER
1641	

MAIL DATE	DELIVERY MODE
11/09/2009	PAPER

Please find below and/or attached an Office communication concerning this application or proceeding.

The time period for reply, if any, is set in the attached communication.

UNITED STATES PATENT AND TRADEMARK OFFICE

Commissioner for Patents
United States Patent and Trademark Office
P.O. Box 1450
Alexandria, VA 22313-1450
www.uspto.gov

MORRISON & FOERSTER LLP
12531 HIGH BLUFF DRIVE
SUITE 100
SAN DIEGO CA 92130-2040

NOV 0 9 2009

In re Application of :
Cantor et al.
Serial No.: 11/799,726
Filed: May 1, 2007
Attorney Docket No.: **532212000610**

: PETITION DECISION

This is in response to the petition under 37 CFR § 1.59(b), filed November 3, 2009, to expunge information from the above identified application. This application has not been allowed.

Petitioner requests that the documents submitted with the Supplemental Information Disclosure Statement filed on November 3, 2009 be expunged from the record. Petitioner states either: (A) that the information contains trade secret material, proprietary material and/or material that is subject to a protective order which has not been made public; or (B) that the information submitted was unintentionally submitted and the failure to obtain its return would cause irreparable harm to the party who submitted the information or to the party in interest on whose behalf the information was submitted, and the information has not otherwise been made public. The petition fee set forth in 37 CFR § 1.17(g) has been paid.

This is an examined application. As such the information provided has been reviewed, in part, but proceedings in the application have not been terminated. As stated in M.P.E.P. 724, upon allowance or other action closing prosecution in an application, petition may be made for return of Proprietary information. The information cannot be expunged at this time.

The petition is **DISMISSED**. Petitioner may resubmit the petition subsequent to a Notice of Allowability or *ex parte Quayle* action being mailed in the application. No additional petition fee will be required at that time.

Should there be any questions about this decision please contact Marianne C. Seidel by letter addressed to Director, TC 1600, at the address listed above, or by telephone at 571-272-0584 or by facsimile sent to the general Office facsimile number, 703-872-9306.

Marianne C. Seidel
Quality Assurance Specialist
Technology Center 1600

UNITED STATES PATENT AND TRADEMARK OFFICE

UNITED STATES DEPARTMENT OF COMMERCE
United States Patent and Trademark Office
Address: COMMISSIONER FOR PATENTS
P.O. Box 1450
Alexandria, Virginia 22313-1450
www.uspto.gov

APPLICATION NO.	FILING DATE	FIRST NAMED INVENTOR	ATTORNEY DOCKET NO.	CONFIRMATION NO.
11/799,726	05/01/2007	Thomas L. Cantor	532212000610	6258

25225 7590 03/31/2010
MORRISON & FOERSTER LLP
12531 HIGH BLUFF DRIVE
SUITE 100
SAN DIEGO, CA 92130-2040

EXAMINER
CHEU, CHANGHWA J

ART UNIT	PAPER NUMBER
1641	

MAIL DATE	DELIVERY MODE
03/31/2010	PAPER

Please find below and/or attached an Office communication concerning this application or proceeding.

The time period for reply, if any, is set in the attached communication.

UNITED STATES PATENT AND TRADEMARK OFFICE

Commissioner for Patents
United States Patent and Trademark Office
P.O. Box 1450
Alexandria, VA 22313-1450
www.uspto.gov

MORRISON & FOERSTER LLP
12531 HIGH BLUFF DRIVE
SUITE 100
SAN DIEGO CA 92130-2040

MAR 3 1 2010

In re Application of:
Cantor et al.
Serial No.: 11/799,726
Filed: May 1, 2007
Attorney Docket No.: **532212000610**

: PETITION DECISION

This is in response to the petition under 37 CFR § 1.59(b), filed March 18, 2010, to expunge information from the above identified application. This application has not been allowed.

Petitioner requests that the document submitted with the Supplemental Information Disclosure Statement filed on March 18, 2010 be expunged from the record. Petitioner states either: (A) that the information contains trade secret material, proprietary material and/or material that is subject to a protective order which has not been made public; or (B) that the information submitted was unintentionally submitted and the failure to obtain its return would cause irreparable harm to the party who submitted the information or to the party in interest on whose behalf the information was submitted, and the information has not otherwise been made public. The petition fee set forth in 37 CFR § 1.17(g) has been paid.

This is an examined application. As such the information provided has been reviewed, in part, but proceedings in the application have not been terminated. As stated in M.P.E.P. 724, upon allowance or other action closing prosecution in an application, petition may be made for return of Proprietary information. The information cannot be expunged at this time.

The petition is **DISMISSED**. Petitioner may resubmit the petition subsequent to a Notice of Allowability or *ex parte Quayle* action being mailed in the application. No additional petition fee will be required at that time.

Should there be any questions about this decision please contact Marianne C. Seidel by letter addressed to Director, TC 1600, at the address listed above, or by telephone at 571-272-0584 or by facsimile sent to the general Office facsimile number, 703-872-9306.

Marianne C. Seidel
Quality Assurance Specialist
Technology Center 1600

SPE RESPONSE FOR CERTIFICATE OF CORRECTION

Paper No.: —

DATE : 1/27/09

TO SPE OF : ART UNIT 3673

SUBJECT : Request for Certificate of Correction for Appl. No.: 11/799735 Patent No.: 7441624 B2

Please respond to this request for a certificate of correction within 7 days.

FOR IFW FILES:

Please review the requested changes/corrections as shown in the **COCIN** document(s) in the IFW application image. No new matter should be introduced, nor should the scope or meaning of the claims be changed.

Please complete the response (see below) and forward the completed response to scanning using document code **COCX**.

FOR PAPER FILES:

Please review the requested changes/corrections as shown in the attached certificate of correction. Please complete this form (see below) and forward it with the file to:

Certificates of Correction Branch (CofC)
South Tower - 9A22
Palm Location 7580

Virginia Tolbert
Certificates of Correction Branch
703-308-9390 ext. 113

Thank You For Your Assistance

The request for issuing the above-identified correction(s) is hereby:
Note your decision on the appropriate box.

- ☒ **Approved** — All changes apply.
- ☐ **Approved in Part** — Specify below which changes **do not** apply.
- ☐ **Denied** — State the reasons for denial below.

Comments: Changes do not change the scope of the claims.

SPE — Art Unit 3673

UNITED STATES PATENT AND TRADEMARK OFFICE

Commissioner for Patents
United States Patent and Trademark Office
P.O. Box 1450
Alexandria, VA 22313-1450
www.uspto.gov

RICHARD R. MUCCINO
758 SPRINGFIELD AVENUE
SUMMIT NJ 07901

MAILED

APR 05 2010

OFFICE OF PETITIONS

In re Application of	:	
CHERUKURI, S. Rao	:	
Application No. 11/799,751	:	DECISION ON PETITION
Filed: May 01, 2007	:	TO WITHDRAW
Attorney Docket No. **CAP3-006**	:	FROM RECORD

This is a decision on the Request to Withdraw as attorney or agent of record under 37 C.F.R. § 1.36(b), filed February 11, 2010.

The request is **APPROVED**.

A grantable request to withdraw as attorney/agent of record must be signed by every attorney/agent seeking to withdraw or contain a clear indication that one attorney is signing on behalf of another/others. The Office requires the practitioner(s) requesting withdrawal to certify that he, she, or they have: (1) given reasonable notice to the client, prior to the expiration of the response period, that the practitioner(s) intends to withdraw from employment; (2) delivered to the client or a duly authorized representative of the client all papers and property (including funds) to which the client is entitled; and (3) notified the client of any responses that may be due and the time frame within which the client must respond, pursuant 37 CFR 10.40(c).

The request was signed by Richard Muccino, the sole attorney of record. Richard Muccino has been withdrawn as attorneys or agents of record. Applicant is reminded that there is no attorney of record at this time.

All future correspondence will be directed to the inventor S. Rao Cherukuri at the address indicated below. There is an outstanding Office action mailed December 18, 2009 that requires a reply from the applicant.

Telephone inquiries concerning this decision should be directed to Tredelle Jackson at 571-272-2783.

/Tredelle D. Jackson/
Paralegal Specialist
Office of Petitions

cc: **S. RAO CHERUKURI**
CAPRICORN PHARMA
6900 ENGLISH MUFFIN WAY, UNIT A
FREDERICK MD 21703

UNITED STATES PATENT AND TRADEMARK OFFICE

Commissioner for Patents
United States Patent and Trademark Office
P.O. Box 1450
Alexandria, VA 22313-1450
www.uspto.gov

ALFRED G. ROCKEFELLER
30 COBBLESTONE LANE
RAMSEY NJ 07446-2457

COPY MAILED
FEB 01 2010

In re Application of
Alfred G. Rockefeller et al.
Application No. 11/799,783
Filed: May 3, 2007
Title of Invention: **TELECONFERENCING BETWEEN VARIOUS 4G WIRELESS ENTITIES SUCH AS MOBILE TERMINALS AND FIXED TERMINALS INCLUDING LAPTOPS AND TELEVISION RECEIVERS FITTED WITH A SPECIAL WIRELESS 4G INTERFACE**

ON PETITION

This is a decision on the request filed December 8, 2007 to acknowledge priority and for the issuance of a corrected filing receipt.

The request is **DISMISSED**.

A RESPONSE TO REQUEST FOR CORRECTED FILING RECEIPT was mailed on December 4, 2007 denying the request for a correction to the filing date. In response the instant petition is filed clarifying that the intent was to correct the priority claim and not to change the filing date.

Petitioner is advised that a request to "have the priority date of Application 11/799,783 to have the same priority date as Application 11/521416 since it is a CIP of Application 11/521416", is not the avenue for requesting a delayed claim to priority.

A request to accept an unintentionally delayed claim for priority to a prior-filed application is by way of petition under 37 CFR §1.78(a). Furthermore, a petition under § 1.78 is only appropriate after the expiration of the period specified in 37 CFR §§ 1.78(a)(2)(ii) or (a)(5)(ii), as appropriate.

A petition for acceptance of a claim for late priority under 37 CFR §§ 1.78(a)(3) and 1.78(a)(6) is only applicable to those applications filed on or after November 29, 2000. Further, the petition is appropriate only after the expiration of the period specified in 37 CFR §§ 1.78(a)(2)(ii) and 1.78(a)(5)(ii). In addition, the petition under 37 CFR §§ 1.78(a)(3) and 1.78(a)(6) must be accompanied by:

(1) the reference required by 35 U.S.C. §§ 120 and 119(e) and 37 CFR §§ 1.78(a)(2)(i) and 1.78(a)(5)(i) of the prior-filed application, unless previously submitted;
(2) the surcharge set forth in § 1.17(t); and
(3) a statement that the entire delay between the date the claim was due under 37 CFR §§ 1.78(a)(2)(ii) and 1.78(a)(5)(ii) and the date the claim was filed was unintentional. The Director may require additional where there is a question whether the delay was unintentional.

Additionally, the nonprovisional application claiming priority must be pending at the time of filing of the reference to the prior-filed provisional application(s) as required by 37 CFR 1.78(a)(5)(ii). Further, the nonprovisional application(s) claiming the benefit of the prior-filed provisional application(s) must have been filed within twelve months of the filing date of the prior-filed provisional application(s).

The fact that a corrected Filing Receipt was mailed November 14, 2007 and included prior-filed applications should not be construed as meaning that applicant is entitled to the claim for benefit of priority to the prior-filed applications noted thereon.

Further correspondence with respect to this matter should be addressed as follows:

By mail: Mail Stop PETITIONS
Commissioner for Patents
Post Office Box 1450
Alexandria, VA 22313-1450

By hand: Customer Service Window
Mail Stop Petitions
Randolph Building
40l Dulany Street
Alexandria, VA 22314

By fax: (571) 273-8300
ATTN: Office of Petitions

Any questions concerning this matter may be directed to Senior Petitions Attorney Patricia Faison-Ball at (571) 272-3212.

Anthony Knight
Supervisor
Office of Petitions

UNITED STATES PATENT AND TRADEMARK OFFICE

COMMISSIONER FOR PATENTS
UNITED STATES PATENT AND TRADEMARK OFFICE
P.O. BOX 1450
ALEXANDRIA, VA 22313-1450
www.uspto.gov

KOPPEL, PATRICK & HEYBL
555 ST. CHARLES DRIVE
SUITE 107
THOUSAND OAKS, CA 91360

COPY MAILED

SEP 26 2007

OFFICE OF PETITIONS

In re Application of	:	
Primit Parikh, et. al.	:	
Application No. 11/799,786	:	DECISION GRANTING
Filed: May 2, 2007	:	PETITION
Attorney Docket No. P0212US3-7	:	

This is a decision on the petition filed on July 24, 2007, requesting that the above-identified application be accorded a filing date of May 2, 2007, rather than the presently accorded date of May 3, 2007.

Petitioner is alleging that the date of mailing shown in the "date-in" is a U. S. Postal Service error and the correct date of mailing, pursuant to 37 CFR 1.10, is May 2, 2007. In support, petitioner provided a copy of the USPS Track and Confirm search results, which shows that the package in question was accepted and enroute on May 2, 2007 at 4:47 pm at Thousand Oaks, CA 91362. It is noted that the same Express Mail label number appears on the original transmittal papers found in the application file.

The Office considers the date the paper or fee is shown to have been deposited as "Express Mail" to be the "date-in" on the Express Mail label (MPEP 513). However, petitioner provided a copy of Express Mail label No. EM 052654017 US, which bears a handwritten "date-in" of May 3, 2007. Therefore, petitioner must rely on "other official USPS notation", such as, the USPS Track and Confirm records, which corroborates petitioner's statement of deposit on May 2, 2007.

In view of the above, the evidence is convincing that the application was deposited with the U.S. Postal Service on May 2, 2007. Accordingly, the petition is **GRANTED**.

This application file is being forwarded to the Office of Initial Patent Examination (OIPE) for correction of the filing date to **May 2, 2007, and for issuance of a corrected filing receipt.**

Telephone inquiries relating to this decision should be directed to Andrea Smith at (571) 272-3226. Telephone inquiries related to OIPE processing should be directed to their hotline at (571) 272-4000.

Frances Hicks
Petitions Examiner
Office of Petitions

UNITED STATES PATENT AND TRADEMARK OFFICE

Commissioner for Patents
United States Patent and Trademark Office
P.O. Box 1450
Alexandria, VA 22313-1450
www.uspto.gov

CESARI AND MCKENNA, LLP
88 BLACK FALCON AVENUE
BOSTON, MA 02210

COPY MAILED

MAY 30 2008

OFFICE OF PETITIONS

In re Application of :
Douglas W. Coatney :
Application No. 11/799,795 : ON PETITION
Filed: May 3, 2007 :
Attorney Docket No. 112056-0104C1

This is a decision on the petition, filed May 29, 2008 under 37 CFR 1.313(c)(2) to withdraw the above-identified application from issue after payment of the issue fee.

The petition is **GRANTED**.

The above-identified application is withdrawn from issue for consideration of a submission under 37 CFR 1.114 (request for continued examination). See 37 CFR 1.313(c)(2).

Petitioner is advised that the issue fee paid on May 8, 2008 in the above-identified application cannot be refunded. If, however, the above-identified application is again allowed, petitioner may request that it be applied towards the issue fee required by the new Notice of Allowance.[1]

Telephone inquiries should be directed to Irvin Dingle at (571) 272-3210.

This matter is being referred to Technology Center AU 2114 for processing of the request for continued examination under 37 CFR 1.114 and for consideration of the concurrently filed Information Disclosure Statement.

Irvin Dingle
Petitions Examiner
Office of Petitions

---

[1] The request to apply the issue fee to the new Notice may be satisfied by completing and returning the new Issue Fee Transmittal Form PTOL-85(b), which includes the following language thereon: Commissioner for Patents is requested to apply the Issue Fee and Publication Fee (if any) or re-apply any previously paid issue fee to the application identified above. Petitioner is advised that, whether a fee is indicated as being due or not, the Issue Fee Transmittal Form **must** be completed and timely submitted to avoid abandonment. Note the language in bold text on the first page of the Notice of Allowance and Fee(s) Due (PTOL-85).

UNITED STATES PATENT AND TRADEMARK OFFICE

Commissioner for Patents
United States Patent and Trademark Office
P.O. Box 1450
Alexandria, VA 22313-1450
www.uspto.gov

MINTZ, LEVIN, COHN, FERRIS, GLOVSKY AND POPEO, P.C
ATTN: PATENT INTAKE CUSTOMER NO. 30623
ONE FINANCIAL CENTER
BOSTON, MA 02111

COPY MAILED

OCT 2 1 2008

OFFICE OF PETITIONS

In re Application of
MORLEY, et al.
Application No. 11/799,816
Filed: May 2, 2007
Attorney Docket No. **3010-501CIP2**

DECISION ON PETITION
UNDER 37 CFR 1.137(b)

This is a decision on the petition under 37 CFR 1.137(b), filed March 31, 2008, to revive the above-identified application.

The petition is **GRANTED.**

The application became abandoned for failure to reply in a timely manner to the Notice to File Missing Parts of Nonprovisional Application (Notice), mailed June 5, 2007. The Notice set a period for reply of two (2) months from the mail date of the Notice. No extensions of time under the provisions of 37 CFR 1.136(a) were obtained. Accordingly, the application became abandoned on August 6, 2007.

The petition satisfies the requirements of 37 CFR 1.137(b) in that petitioner has supplied (1) the reply in the form of a supplemental declaration with surcharge fee of $65; (2) the petition fee of $770; and (3) an adequate statement of unintentional delay.

An extension of time under 37 CFR 1.136 must be filed prior to the expiration of the maximum extendable period for reply. *See* In re Application of S., 8 USPQ2d 1630, 1631 (Comm'r Pats. 1988). Since the $1115 extension of time fee submitted with the petition on March 31, 2008 was subsequent to the maximum extendable period for reply, petitioner may request a refund of this fee by writing to the following address: Mail Stop 16, Commissioner for Patents, P. O. Box 1450, Alexandria, VA 22313-1450. A copy of this decision should accompany petitioner's request.

Telephone inquiries concerning this decision should be directed to Monica A. Graves at (571) 272-7253.

The application file is being referred to the Office of Patent Application Processing for further processing.

Brian W. Brown
Petitions Examiner
Office of Petitions

UNITED STATES PATENT AND TRADEMARK OFFICE

Commissioner for Patents
United States Patent and Trademark Office
P.O. Box 1450
Alexandria, VA 22313-1450
www.uspto.gov

LEWIS, BRISBOIS, BISGAARD & SMITH LLP
221 NORTH FIGUEROA STREET
SUITE 1200
LOS ANGELES, CA 90012

COPY MAILED

JUN 0 9 2008

In re Application of	:	
VERNA, Anthony F.	:	
Application No. 11/799,874	:	DECISION ON PETITION
Filed: May 03, 2007	:	TO MAKE SPECIAL UNDER
Attorney Docket No. **28386-2**	:	37 CFR 1.102(c)(1)
	:	

This is a decision on the petition under 37 CFR 1.102(c)(1), filed November 20, 2007, to make the above-identified application special based on applicant's age as set forth in M.P.E.P. § 708.02, Section IV.

The petition is **GRANTED**.

A grantable petition to make an application special under 37 CFR 1.102(c)(1) and MPEP § 708.02, Section IV: Applicant's Age must be accompanied by evidence showing that at least one of the applicants is 65 years of age, or more, such as a birth certificate or a statement by applicant. No fee is required

The instant petition includes a statement by Anthony F. Verna attesting that he is over 65 years of age. Accordingly, the above-identified application has been accorded "special" status.

Telephone inquiries concerning this decision should be directed to Michelle R. Eason at 571-272-4231.

All other inquiries concerning either the examination or status of the application should be directed to the Technology Center.

The application is being forwarded to the Technology Center Art Unit 2173 for action on the merits commensurate with this decision.

Michelle R. Eason
Paralegal Specialist
Office of Petitions

UNITED STATES PATENT AND TRADEMARK OFFICE

UNITED STATES DEPARTMENT OF COMMERCE
United States Patent and Trademark Office
Address: COMMISSIONER FOR PATENTS
P.O. Box 1450
Alexandria, Virginia 22313-1450
www.uspto.gov

TEXAS INSTRUMENTS INCORPORATED
P O BOX 655474, M/S 3999
DALLAS, TX 75265

Mail Date: 05/10/2010

Applicant	: Binling Zhou	: DECISION ON REQUEST FOR
Patent Number	: 7626525	: RECALCULATION of PATENT
Issue Date	: 12/01/2009	: TERM ADJUSTMENT IN VIEW
Application No	: 11/799,879	: OF WYETH AND NOTICE OF INTENT TO
Filed	: 05/03/2007	: ISSUE CERTIFICATE OF CORRECTION
		:

The Request for Recalculation is **GRANTED** to the extent indicated.

The patent term adjustment has been determined to be **390** days. The USPTO will *sua sponte* issue a certificate of correction reflecting the amount of PTA days determined by the recalculation.

Prior to the issuance of the certificate of correction, the USPTO will afford patentee an opportunity to be heard and request reconsideration. Accordingly, patentee has **one month or thirty (30) days**, whichever is longer, to file a request for reconsideration of this patent term adjustment calculation. See 35 U.S.C. 154(b)(3)(B)(ii) and 37 CFR 1.322(a)(4). No extensions of time will be granted under 37 CFR 1.136.

Patentee should use document code PET.OP if electronically filing a request for reconsideration of this patent term adjustment calculation. The patentee must also include the information required by 37 CFR 1.705(b)(2) and the fee required by 37 CFR 1.18(e). If patentee does not file a timely request for reconsideration of this patent term adjustment calculation including the information required by 37 CFR 1.705(b)(2) and the fee required by 37 CFR 1.18(e), the USPTO will issue a certificate of correction reflecting the PTA determination noted above.

Patentee should be aware that in order to preserve the right to review in the United States District Court for the District of Columbia of the USPTO patent term adjustment determination, patentee must ensure that he or she also take the steps required under 35 U.S.C. 154(b)(4)(A) in a timely manner. Nothing in the request for recalculation should be construed as providing an alternative time frame for commencing a civil action under 35 U.S.C. 154(b)(4)(A).

Any questions concerning this decision should be directed to the Office of Patent Legal Administration at 571-272-7702.

UNITED STATES PATENT AND TRADEMARK OFFICE

Commissioner for Patents
United States Patent and Trademark Office
P.O. Box 1450
Alexandria, VA 22313-1450
www.uspto.gov

LEO J. AUBEL
111 RIVERSHIRE LANE
LINCOLNSHIRE, IL 60069

COPY MAILED

JUN 1 1 2007

OFFICE OF PETITIONS

In re Application of	:	
BECKWITH, Robert W.	:	
Application No. 11/799,915	:	DECISION ON PETITION
Filed: May 3, 2007	:	TO MAKE SPECIAL UNDER
Attorney Docket No.	:	37 CFR 1.102(c)(1)
	:	

This is a decision on the petition under 37 CFR 1.102(c)(1), filed May 3, 2007, to make the above-identified application special based on applicant's age as set forth in M.P.E.P. § 708.02, Section IV.

The petition is **GRANTED**.

A grantable petition to make an application special under 37 CFR 1.102(c)(1) and MPEP § 708.02, Section IV: Applicant's Age must be accompanied by evidence showing that at least one of the applicants is 65 years of age, or more, such as a birth certificate or a statement by applicant. No fee is required

The instant petition includes the birth certificate of inventor Robert W. Beckwith, attesting to his age. Accordingly, the above-identified application has been accorded "special" status.

Telephone inquiries concerning this decision should be directed to the undersigned at 571-272-7253.

All other inquiries concerning either the examination or status of the application should be directed to the Technology Center.

The application is being forwarded to the Technology Center Art Unit 2821 for action on the merits commensurate with this decision.

Monica A. Graves
Petitions Examiner
Office of Petitions

UNITED STATES PATENT AND TRADEMARK OFFICE

Commissioner for Patents
United States Patent and Trademark Office
P.O. Box 1450
Alexandria, VA 22313-1450
www.uspto.gov

LAW OFFICES OF BORIS G. TANKHILEVICH
536 NORTH CIVIC DRIVE
SUITE A
WALNUT CREEK CA 94597

MAILED

APR 20 2009

OFFICE OF PETITIONS

Applicant: Korenblit, et al.
Appl. No.: 11/799,937
Filing Date: May 2, 2007
Title: DYNAMICS OF TERAHERTZ RADIATION
Attorney Docket: TERAHERTZ-5
Pub. No.: US 2008/0192792 A1
Pub. Date: August 14, 2008

This is a decision on the request for a corrected patent application publication under 37 CFR 1.221(b), received on October 10, 2008, for the above-identified application.

Applicant requests that the application be republished because the patent application publication contains material errors.

The request is DISMISSED as moot.

Since the application has already issued as U.S. Patent No. 7,471,449 on December 30, 2008, the request is deemed moot.

It would greatly benefit the Office if **applicant did not provide copies of papers**, which were previously submitted and/or **a complete copy of the pre-grant publication**, as it unnecessarily increases the cost to the Office. See 37 CFR 1.4(b). A request for corrected publication need only point out what was printed incorrectly in the application, where the error occurs in the publication and where the correct text or drawing is found in the application papers. Marked up relevant copies of the applications papers and the pre-grant publication may facilitate processing of the request, where it is not readily apparent where the error occurs. If it is not clear why the error is a material error, further explanation may be warranted.

Inquiries relating to this matter may be directed to Mark Polutta at (571) 272-7709.

Mark Polutta
Senior Legal Advisor
Office of Patent Legal Administration
Office of the Deputy Commissioner
for Patent Examination Policy

UNITED STATES PATENT AND TRADEMARK OFFICE

Commissioner for Patents
United States Patent and Trademark Office
P.O. Box 1450
Alexandria, VA 22313-1450
www.uspto.gov

DOWNS RACHLIN MARTIN PLLC
199 MAIN STREET
P.O. BOX 190
BURLINGTON, VT 05402-0190

COPY MAILED

DEC 18 2009

OFFICE OF PETITIONS

In re Application of
Keith J. Thompson
Application No. 11/799,975
Filed: May 3, 2007
Attorney Docket No. 13287-002USU1

ON PETITION

This is a decision on the petition under 37 CFR 1.137(b), filed October 16, 2009, to revive the above-identified application.

The application became abandoned for failure to file a reply to the Restriction/Election Requirement mailed on March 27, 2008. A Notice of Abandonment was mailed on October 4, 2008.

It is noted that petitioner was not the representative of the applicant at the time of abandonment. However, in accordance with 37 CFR 10.18, the statement is accepted as constituting a certification of unintentional delay. However, in the event that petitioner has no knowledge that the entire delay was unintentional, petitioner must make such an inquiry to ascertain that, in fact, the entire delay was unintentional. If petitioner discovers that the delay was intentional, petitioner must so notify the Office.

The petition satisfies the requirements of 37 CFR 1.137(b) in that petitioner has supplied (1) the reply in the form of an election; (2) the petition fee of $810; and (3) a proper statement of unintentional delay. Therefore, the petition is **GRANTED**.

The Power of Attorney or Revocation of Power of Attorney with a New Power of Attorney and Change of Correspondence Address filed October 16, 2009 has been accepted and made of record.

This application file is being referred to Technology Center Art Unit 3618 for review of the response filed with the present petition.

Telephone inquiries concerning this decision should be directed to the undersigned at (571) 272-3226.

Andrea Smith
Petitions Examiner
Office of Petitions

UNITED STATES PATENT AND TRADEMARK OFFICE

OCT 5 2007

Commissioner for Patents
United States Patent and Trademark Office
P.O. Box 1450
Alexandria, VA 22313-1450
www.uspto.gov

EMCH, SCHAFFER, SCHAUB & PORCELLO CO
P O BOX 916
ONE SEAGATE SUITE 1980
TOLEDO OH 43697

In re Application of	:
William Jay Turner et al	:
Serial No.: 11/799,976	: PETITION DECISION
Filed: May 3, 2007	:
Attorney Docket No.: 05113A/6715BUS	:

This is a decision on the PETITION FOR ACCEPTANCE OF COLOR DRAWINGS UNDER 37 CFR 1.84(a)(2). The petition was filed originally filed May 3, 2007. Entry of color drawings requires: 1) three sets of the color drawings, 2) a proper amendment to the specification indicating color photographs or drawings are present in the file, and 3) the required fee under 37 CFR 1.17(h).

A review of the application record indicates that the petition meets all of the requirements for acceptance of color drawings. This is not to be construed that all of the drawings are accepted, only that the color drawings are acceptable.

The petition is **GRANTED**.

Should there be any questions with respect to this decision, please contact William R. Dixon, Jr., by mail addressed to: Director, Technology Center 1600, at the address listed above, or by telephone at 571-272-0519 or by facsimile transmission at 571-273-8300.

William R. Dixon, Jr.
Special Program Examiner
Technology Center 1600

UNITED STATES PATENT AND TRADEMARK OFFICE

Commissioner for Patents
United States Patent and Trademark Office
P.O. Box 1450
Alexandria, VA 22313-1450
www.uspto.gov

BRINKS HOFER GILSON & LIONE
P.O. BOX 10395
CHICAGO IL 60610

COPY MAILED

SEP 0 5 2008

OFFICE OF PETITIONS

In re Application of	:	
Yoshiki Matoba et al.	:	
Application No. 11/799,992	:	DECISION GRANTING
Filed: May 3, 2007	:	PETITION
Attorney Docket No. 11106/75	:	

This is a decision on the petition, filed June 16, 2008, requesting that the above-identified application be accorded a filing date of May 2, 2007, rather than the presently accorded date of May 3, 2007. The petition is properly treated as a petition under 37 CFR 1.10(c).

Petitioner alleges that the application was deposited in Express Mail Service on May 2, 2007. In support, the petition is accompanied by a copy of Express Mail receipt No. EV 906811430 US (the same Express Mail number found on the original application papers located in the official file) showing a "date in" of May 2, 2007.

The Office considers the date the paper or fee is shown to have been deposited as "Express Mail" to be the "date-in" on the Express Mail label; MPEP 513. The evidence is convincing that the application was deposited as "Express Mail" with the U. S. Postal Service on May 2, 2007.

In view of the above, the petition is **GRANTED**.

This application file is being referred to the Office of Initial Patent Application Processing for correction of the filing date to May 2, 2007 and for issuance of a corrected filing receipt.

Telephone inquiries relating to this decision should be directed Carl Friedman at (571) 272-6842. Telephone inquiries related to Office of Initial Patent Application Processing should be directed to their hotline at (571) 272-4100.

David Bucci
Petitions Examiner
Office of Petitions

UNITED STATES PATENT AND TRADEMARK OFFICE

SEP 19 2007

Commissioner for Patents
United States Patent and Trademark Office
P.O. Box 1450
Alexandria, VA 22313-1450
www.uspto.gov

LAW OFFICE OF TRACY P. JONG
2775 BUFFALO ROAD, SUITE 3
RORCHESTER NY 14514

In re Application of	:
Jerold Lisson	:
Serial No.: 11/800,018	: PETITION TO MAKE SPECIAL
Filed: May 3, 2007	:
Attorney Docket No.: JL-510	:

This is in response to the petition filed May 3, 2007, to make the above-identified application special under the provisions of 37 CFR 1.102(c), based on the age of the applicant.

Applicant has satisfied the provisions set forth in M.P.E.P. 708.02, IV. Therefor the petition is **GRANTED**.

The application will be forwarded to the examiner for action on the merits commensurate with this decision.

Should there be any questions with regard to this letter please contact William R. Dixon, Jr. by letter addressed to the Director, Technology Center 1600, PO BOX 1450, ALEXANDRIA, VA 22313-1450, or by telephone at 571-272-0519 or by facsimile transmission to the general Office facsimile number, 571-273-8300.

William R. Dixon, Jr.
Special Program Examiner
Technology Center 1600

Back To Home Page

PATENT APPLICATION

11800018

PATENT APPLICATION

UNITED STATES PATENT AND TRADEMARK OFFICE

Commissioner for Patents
United States Patent and Trademark Office
P.O. Box 1450
Alexandria, VA 22313-1450
www.uspto.gov

O'KEEFE, EGAN, PETERMAN & ENDERS LLP
1101 CAPITAL OF TEXAS HIGHWAY SOUTH
#C200
AUSTIN TX 78746

COPY MAILED

DEC 2 2 2009

OFFICE OF PETITIONS

In re Patent No. 7,391,030	:	
Issue Date: June 24, 2008	:	
Application No. 11/800,026	:	DECISION ON PETITION
Filed: May 03, 2007	:	
Attorney Docket No. METR:005C4	:	

This is a decision on the petition under 37 CFR 1.182, filed June 24, 2008 and resubmitted July 07, 2009, requesting issuance of duplicate Letters Patent for the above-identified patent.

The petition is **GRANTED**.

The Office of Data Management is directed to issue duplicate Letters Patent.

As authorized, the $400 fee for the petition under 37 CFR 1.182 has been assessed to petitioner's deposit account.

Telephone inquiries concerning this decision may be directed to Michelle R. Eason at (571) 272-4231. Inquiries regarding the issuance of duplicate Letters Patent may be directed to Niomi Farmer in the Office of Data Management at (703) 756-1556.

A copy of this decision is being sent to Office of Data Management for issuance of duplicate Letters Patent.

Thurman K. Page
Petitions Examiner
Office of Petitions

cc: Niomi Farmer, Randolph Square, 9th Floor, Room D30-B (Fax No. (571) 270-9753)

UNITED STATES PATENT AND TRADEMARK OFFICE

Commissioner for Patents
United States Patent and Trademark Office
P.O. Box 1450
Alexandria, VA 22313-1450
www.uspto.gov

FOLEY & LARDNER LLP
777 EAST WISCONSIN AVENUE
MILWAUKEE WI 53202-5306

MAILED

MAY 24 2010

OFFICE OF PETITIONS

In re Application of	:	
Ryan Robertson et al	:	
Application No. 11/800,051	:	DECISION GRANTING PETITION
Filed: May 3, 2007	:	UNDER 37 CFR 1.313(c)(2)
Attorney Docket No. 035451-0298	:	

This is a decision on the petition under 37 CFR 1.313(c)(2), filed May 20, 2010, to withdraw the above-identified application from issue after payment of the issue fee.

The petition is **GRANTED**.

The above-identified application is withdrawn from issue for consideration of a submission under 37 CFR 1.114 (request for continued examination). *See* 37 CFR 1.313(c)(2).

Petitioner is advised that the issue fee paid on April 16, 2010 cannot be refunded. If, however, this application is again allowed, petitioner may request that it be applied towards the issue fee required by the new Notice of Allowance.[1]

Telephone inquiries should be directed to the undersigned at (571) 272-3208.

This application is being referred to Technology Center AU 2629 for processing of the request for continued examination under 37 CFR 1.114 and for consideration of the concurrently filed IDS.

/Karen Creasy/
Karen Creasy
Petitions Examiner
Office of Petitions

---

[1] *The request to apply the issue fee to the new Notice may be satisfied by completing and returning the new Part B – Fee(s) Transmittal Form (along with any balance due at the time of submission). Petitioner is advised that the Issue Fee Transmittal Form* ***must*** *be completed and timely submitted to avoid abandonment of the application.*

UNITED STATES PATENT AND TRADEMARK OFFICE

UNITED STATES DEPARTMENT OF COMMERCE
United States Patent and Trademark Office
Address: COMMISSIONER FOR PATENTS
P.O. Box 1450
Alexandria, Virginia 22313-1450
www.uspto.gov

CROMPTON, SEAGER & TUFTE, LLC
1221 NICOLLET AVENUE
SUITE 800
MINNEAPOLIS, MN 55403-2420

Mail Date: 04/21/2010

Applicant	: Christopher C. Olson	: DECISION ON REQUEST FOR
Patent Number	: 7633293	: RECALCULATION of PATENT
Issue Date	: 12/15/2009	: TERM ADJUSTMENT IN VIEW
Appliction No	: 11/800,055	: OF WYETH AND NOTICE OF INTENT TO
Filed	: 05/03/2007	: ISSUE CERTIFICATE OF CORRECTION
		:

The Request for Recalculation is **GRANTED** to the extent indicated.

The patent term adjustment has been determined to be **0** days. The USPTO will *sua sponte* issue a certificate of correction reflecting the amount of PTA days determined by the recalculation.

Prior to the issuance of the certificate of correction, the USPTO will afford patentee an opportunity to be heard and request reconsideration. Accordingly, patentee has **one month or thirty (30) days**, whichever is longer, to file a request for reconsideration of this patent term adjustment calculation. See 35 U.S.C. 154(b)(3)(B)(ii) and 37 CFR 1.322(a)(4). No extensions of time will be granted under 37 CFR 1.136.

Patentee should use document code PET.OP if electronically filing a request for reconsideration of this patent term adjustment calculation. The patentee must also include the information required by 37 CFR 1.705(b)(2) and the fee required by 37 CFR 1.18(e). If patentee does not file a timely request for reconsideration of this patent term adjustment calculation including the information required by 37 CFR 1.705(b)(2) and the fee required by 37 CFR 1.18(e), the USPTO will issue a certificate of correction reflecting the PTA determination noted above.

Patentee should be aware that in order to preserve the right to review in the United States District Court for the District of Columbia of the USPTO patent term adjustment determination, patentee must ensure that he or she also take the steps required under 35 U.S.C. 154(b)(4)(A) in a timely manner. Nothing in the request for recalculation should be construed as providing an alternative time frame for commencing a civil action under 35 U.S.C. 154(b)(4)(A).

Any questions concerning this decision should be directed to the Office of Patent Legal Administration at 571-272-7702.

UNITED STATES PATENT AND TRADEMARK OFFICE

Commissioner for Patents
United States Patent and Trademark Office
P.O. Box 1450
Alexandria, VA 22313-1450
www.uspto.gov

Cherskov & Flaynik
The Civic Opera Building
20 North Wacker Drive, Suite 1447
Chicago, IL 60606

COPY MAILED

AUG 2 4 2007

OFFICE OF PETITIONS

In re Application of	:	
Ira Kozak et al.	:	
Application No. 11/800,057	:	DECISION ON PETITION
Filed: May 3, 2007	:	TO MAKE SPECIAL UNDER
Attorney Docket No. 0052-01769	:	37 CFR 1.102(c)(1)
	:	

This is a decision on the petition under 37 CFR 1.102(c)(1), filed July 26, 2007, to make the above-identified application special based on applicant's age as set forth in M.P.E.P. § 708.02, Section IV.

The petition is **GRANTED**.

A grantable petition to make an application special under 37 CFR 1.102(c)(1) and MPEP § 708.02, Section IV: Applicant's Age must be accompanied by evidence showing that at least one of the applicants is 65 years of age, or more, such as a birth certificate or a statement by applicant. No fee is required

The instant petition includes a signed declaration from the applicant. Accordingly, the above-identified application has been accorded "special" status.

Telephone inquiries concerning this decision should be directed to Kimberly Inabinet at 571-272-4618.

All other inquiries concerning either the examination or status of the application should be directed to the Technology Center.

The application is being forwarded to the Technology Center Art Unit 3723 for action on the merits commensurate with this decision.

Frances Hicks

Frances Hicks
Petitions Examiner
Office of Petitions

UNITED STATES PATENT AND TRADEMARK OFFICE

Commissioner for Patents
United States Patent and Trademark Office
P.O. Box 1450
Alexandria, VA 22313-1450
www.uspto.gov

Paper No.

MINTZ, LEVIN, COHN, FERRIS,
GLOVSKY AND POPEO, P.C
ATTN: PATENT INTAKE CUSTOMER
NO. 64046
ONE FINANCIAL CENTER
BOSTON MA 02111

COPY MAILED

JUN 24 2008

OFFICE OF PETITIONS

In re Application of	:	
Arias et al.	:	
Application No. 11/800,060	:	ON PETITION
Filed: May 2, 2007	:	
Attorney Docket No. 34788-503	:	

This is in response to the PETITION FOR FILING PATENT APPLICATION WHEN AN INVENTOR CANNOT BE REACHED 37 C.F.R. §1.47(b) filed November 5, 2007, which is properly treated as a petition under 37 CFR 1.47(a). This decision is made in light of the declaration filed November 15, 2007, signed by the previously non-signing inventors.

The petition is **DISMISSED**.

Rule 47 applicant is given **TWO MONTHS** from the mailing date of this decision to reply, correcting the below-noted deficiencies. Any reply should be entitled "Request for Reconsideration of Petition Under 37 C.F.R. §1.47(a)," and should only address the deficiencies noted below, **except that the reply may include an oath or declaration executed by the non-signing inventor.** Failure to respond will result in abandonment of the application. Any extensions of time will be governed by 37 C.F.R. § 1.136(a).

The above-identified application was filed without an oath or declaration. In response to a "Notice to File Missing Parts of Nonprovisional Application" mailed June 5, 2007, on November 5, 2007, applicants filed the initial petition. This response was

made timely by an accompanying petition and fee for extension for response within the fourth month. Applicants requested acceptance of the declaration without the signatures of inventors Beckmann and Maples. Prior to a decision being rendered, on November 15, 2007, applicants filed a declaration executed by inventors Beckmann and Maples.

Joinder of the inventors is a proper further response. However, the declaration submitted is not acceptable. It includes non-dated and non-initialed changes (e.g., see signature block of inventor Bigelow).

Further correspondence with respect to this matter should be addressed as follows:

By mail: Mail Stop Petition
Commissioner for Patents
P.O. Box 1450
Alexandria, VA 22313-1450

By FAX: (571) 273-8300
Attn: Office of Petitions
ATTN: NANCY JOHNSON

By hand: Customer Service Window
Randolph Building
401 Dulany Street
Alexandria, VA 22314

Telephone inquiries related to this decision may be directed to the undersigned at (571) 272-3219.

Nancy Johnson
Senior Petitions Attorney
Office of Petitions

UNITED STATES PATENT AND TRADEMARK OFFICE

Commissioner for Patents
United States Patent and Trademark Office
P.O. Box 1450
Alexandria, VA 22313-1450
www.uspto.gov

MINTZ, LEVIN, COHN, FERRIS, GLOVSKY AND POPEO, P.C
ONE FINANCIAL CENTER
BOSTON MA 02111

MAILED

APR 27 2009

OFFICE OF PETITIONS

In re Application of	:	
ARIAS, Jeffrey L. et al.	:	
Application No. 11/800,060	:	DECISION ON PETITION
Filed: May 02, 2007	:	TO WITHDRAW
Attorney Docket No. **34788-503**	:	FROM RECORD
	:	

This is a decision on the Request to Withdraw as attorney or agent of record under 37 C.F.R. § 1.36(b), filed March 25, 2009.

The request is **APPROVED**.

A grantable request to withdraw as attorney/agent of record must be signed by every attorney/agent seeking to withdraw or contain a clear indication that one attorney is signing on behalf of another/others. The Office requires the practitioner(s) requesting withdrawal to certify that he, she, or they have: (1) given reasonable notice to the client, prior to the expiration of the response period, that the practitioner(s) intends to withdraw from employment; (2) delivered to the client or a duly authorized representative of the client all papers and property (including funds) to which the client is entitled; and (3) notified the client of any responses that may be due and the time frame within which the client must respond, pursuant 37 CFR 10.40(c).

The request was signed by Carl A. Kukkonen, III on behalf of all attorneys of record who are associated with customer No. 64046. All attorneys/agents associated have been withdrawn. Applicant is reminded that there is no attorney of record at this time.

The request to change the correspondence address of record is not acceptable as the requested correspondence address is not that of: (1) the first named signing inventor; or (2) an intervening assignee of the entire interest under 37 C.F.R 3.71. All future communications from the Office will be directed to the first named signing inventor.

There are no outstanding office actions at this time.

Telephone inquiries concerning this decision should be directed to Michelle R. Eason at 571-272-4231.

Michelle R. Eas0n
Paralegal Specialist
Office of Petitions

cc: **JEFFREY LYNN ARIAS**
9241 CORD AVENUE
DOWNEY, CA 90240

cc: **LAW OFFICE OF SCOTT C HARRIS INC**
PO BOX 1389
RANCHO SANTA FE, CA 92067

UNITED STATES PATENT AND TRADEMARK OFFICE

Commissioner for Patents
United States Patent and Trademark Office
P.O. Box 1450
Alexandria, VA 22313-1450
www.uspto.gov

MINTZ, LEVIN, COHN, FERRIS,
GLOVSKY AND POPEO, P.C.
ONE FINANCIAL CENTER
BOSTON, MA 02111

COPY MAILED

APR 10 2009

OFFICE OF PETITIONS

In re Application of	:	
Manuel Arranz DEL ROSAL, et al	:	
Application No. 11/800,061	:	DECISION ON PETITION
Filed: May 2, 2007	:	TO WITHDRAW
Attorney Docket No. 34788-504	:	FROM RECORD
	:	

This is a decision on the Request to Withdraw as attorney or agent of record under 37 C.F.R. § 1.36(b), filed March 25, 2009.

The request is **APPROVED**.

A grantable request to withdraw as attorney/agent of record must be signed by every attorney/agent seeking to withdraw or contain a clear indication that one attorney is signing on behalf of another/others. The Office requires the practitioner(s) requesting withdrawal to certify that he, she, or they have: (1) given reasonable notice to the client, prior to the expiration of the response period, that the practitioner(s) intends to withdraw from employment; (2) delivered to the client or a duly authorized representative of the client all papers and property (including funds) to which the client is entitled; and (3) notified the client of any responses that may be due and the time frame within which the client must respond, pursuant 37 CFR 10.40(c).

The request was signed by Carl A. Kukkonen III on behalf of the attorneys of record associated with Customer No. 64046.

The attorneys of record associated with Customer No. 64046 have been withdrawn.

Applicant is reminded that there is no attorney of record at this time.

The request to change the correspondence address of record is not acceptable as the requested correspondence address is not that of: (1) the first named signing inventor; or (2) an intervening assignee of the entire interest under 37 C.F.R 3.71. All future communications from the Office will be directed to the first named signing inventor at the first copied address below until otherwise properly notified by the applicant.

In order to request or take action in a patent matter, the assignee must establish its ownership of the patent to the satisfaction of the Director. In this regard, a Statement under 37 CFR 3.73(b) must have either: (i) documentary evidence of a chain of title from the original owner to the assignee (*e.g.*, copy of an executed assignment), and a statement affirming that the documentary evidence of the chain of title from the original owner to the assignee was or concurrently is being submitted for recordation pursuant to § 3.11; or (ii) a statement specifying where documentary evidence of a chain of title from the original owner to the assignee is recorded in the assignment records of the Office (*e.g.*, reel and frame number).

Telephone inquiries concerning this decision should be directed to the undersigned at 571-272-6735.

Diane Goodwyn
Petitions Examiner
Office of Petitions

cc: MANUEL ARRANZ DEL ROSAL
600 CANYON DRIVE
GLENDALE, CA 91206

cc : LAW OFFICE OF SCOTT C. HARRIS INC.
P.O. BOX 1389
RANCHO SANTA FE, CA 92067

SPE RESPONSE FOR CERTIFICATE OF CORRECTION

Paper No.: _____

DATE : 2/22/2010

TO SPE OF : ART UNIT 3676 Such Field, George

SUBJECT : Request for Certificate of Correction for Appl. No.: 11/820085 Patent No.: 7481273

Please respond to this request for a certificate of correction within 7 days.

FOR IFW FILES:

Please review the requested changes/corrections as shown in the **COCIN** document(s) in the IFW application image. No new matter should be introduced, nor should the scope or meaning of the claims be changed.

Please complete the response (see below) and forward the completed response to scanning using document code **COCX**.

FOR PAPER FILES:

Please review the requested changes/corrections as shown in the attached certificate of correction. Please complete this form (see below) and forward it with the file to:

Certificates of Correction Branch (CofC)
Randolph Square – 9D10-A
Palm Location 7580

Certificates of Correction Branch
703-756-1571 _____

Thank You For Your Assistance

The request for issuing the above-identified correction(s) is hereby:
Note your decision on the appropriate box.

- ☑ **Approved** — All changes apply.
- ☐ **Approved in Part** — Specify below which changes **do not** apply.
- ☐ **Denied** — State the reasons for denial below.

Comments: _____

DAVID BAGNELL
SUPERVISORY PATENT EXAMINER
TECHNOLOGY CENTER 3600

SPE — Art Unit 3676 (Acting)

PTOL-306 (REV. 7/03)

U.S. DEPARTMENT OF COMMERCE Patent and Trademark Office

SPE RESPONSE FOR CERTIFICATE OF CORRECTION

Paper No.: _____

DATE : 2/22/2010

TO SPE OF : ART UNIT 3676 Such Field, George

SUBJECT : Request for Certificate of Correction for Appl. No.: 11/800085 Patent No.: 7481273

Please respond to this request for a certificate of correction within 7 days.

FOR IFW FILES:

Please review the requested changes/corrections as shown in the **COCIN** document(s) in the IFW application image. No new matter should be introduced, nor should the scope or meaning of the claims be changed.

Please complete the response (see below) and forward the completed response to scanning using document code **COCX**.

FOR PAPER FILES:

Please review the requested changes/corrections as shown in the attached certificate of correction. Please complete this form (see below) and forward it with the file to:

Certificates of Correction Branch (CofC)
Randolph Square – 9D10-A
Palm Location 7580

Certificates of Correction Branch
703-756-1571 _____

Thank You For Your Assistance

The request for issuing the above-identified correction(s) is hereby:
Note your decision on the appropriate box.

- [X] **Approved** — All changes apply.
- [ ] **Approved in Part** — Specify below which changes **do not** apply.
- [ ] **Denied** — State the reasons for denial below.

Comments: _____

DAVID BAGNELL
SUPERVISORY PATENT EXAMINER
TECHNOLOGY CENTER 3600

SPE — 3672 Art Unit

UNITED STATES PATENT AND TRADEMARK OFFICE

Commissioner for Patents
United States Patent and Trademark Office
P.O. Box 1450
Alexandria, VA 22313-1450
www.uspto.gov

Date Mailed: November 10, 2008

MORRISON & FOERSTER LLP
12531 HIGH BLUFF DRIVE
SUITE 100
SAN DIEGO CA 92130-2040

Applicant: Von Nussbaum et al.
Appl. No.: 11/800,102
Filing Date: May 4, 2007
Title: METHODS FOR THE SPECIFIC PREPARATION OF LYSOBACTIN FRAGMENTS
Attorney Docket No.: 584212005201
Pub. No.: US 2008/0021199 A1
Pub. Date: January 24, 2008

This is a decision on the request for republication of patent application publication under 37 CFR 1.221(a), filed on November 4, 2008, for the above-identified application.

The request under 37 CFR 1.221(a) is DISMISSED.

37 CFR 1.221(a) requires "a copy of the application in compliance with the Office electronic filing system requirements and be accompanied by the publication fee set forth in § 1.18(d) and the processing fee set forth in § 1.17(i)". If the request for republication does not comply with the electronic filing system requirements, the republication will not take place and the publication fee set forth in § 1.18(d) will be refunded. The processing fee will be retained.

The applicant did not supply a copy of the application in compliance with the Office electronic filing system, as required by 37 CFR 1.221(a) because **the Applicant submitted the papers as a "Document for an existing application", which are entered into the application file, and not as a "Pre-Grant Publication" submission**. The request for republication does not comply with the electronic filing system requirements, thus republication will not take place.

Any request for republication under 37 CFR 1.221(a), must be submitted via the EFS system, **as a Pre-Grant publication submission.** The applicant is directed to the following website for additional instructions on how to submit a Pre-Grant Publication submission via the electronic filing system:

http://www.uspto.gov/ebc/portal/efs/pgpub_quickstart.pdf

Any questions or requests for reconsideration of the decision should be addressed as follows:

By mail to: Mail Stop PGPUB
Commissioner for Patents
P.O. Box 1450
Alexandria, Va. 22313-1450

By facsimile: 571-273-8300

Telephone inquiries regarding this correspondence should be directed to The Office of Data Management at 571-272-4200.

Tammy J. Koontz
Program & Management Analyst
Office of Data Management

```
Adjustment date: 11/10/2008  KKING1
11/05/2008 INTEFSW  00010974 031952   11800102
01 FC:1504        300.00 CR
```

UNITED STATES PATENT AND TRADEMARK OFFICE

Commissioner for Patents
United States Patent and Trademark Office
P.O. Box 1450
Alexandria, VA 22313-1450
www.uspto.gov

BLAKELY, SOKOLOFF, TAYLOR & ZAFMAN, LLP
1279 OAKMEAD PARKWAY
SUNNYVALE, CA 94085-4040

MAILED

MAR 26 2009

OFFICE OF PETITIONS

In re Application of	:	
Avraham Faizakov, et al	:	
Application No. 11/800,106	:	DECISION ON PETITION
Filed: May 4, 2007	:	TO WITHDRAW
Attorney Docket No. 3932P034	:	FROM RECORD
	:	

This is a decision on the Request to Withdraw as attorney or agent of record under 37 C.F.R. § 1.36(b), filed January 14, 2009.

The request is **DISMISSED** as moot.

A review of the file record indicates that the power of attorney to Blakely, Sokoloff, Taylor & Zafman, LLP has been revoked by the assignee of the patent application on January 22, 2009. Accordingly, the request to withdraw under 37 C.F.R. § 1.36(b) is moot.

All future communications from the Office will continue to be directed to the below-listed address until otherwise notified by applicant.

Telephone inquires concerning this decision should be directed to undersigned at 571-272-1642.

/AMW/
April M. Wise
Petitions Examiner
Office of Petitions

cc: MICHAEL GLENN
GLENN PATENT GROUP
3475 EDISON WAY
SUITE 6
MENLO PARK, CA 94025

UNITED STATES PATENT AND TRADEMARK OFFICE

Commissioner for Patents
United States Patent and Trademark Office
P.O. Box 1450
Alexandria, VA 22313-1450
www.uspto.gov

MAILED

MAY 19 2010

OFFICE OF PETITIONS

Gary Carter, Sr.
7490 Washington Street
Hanover Park, Illinois 60133

In re Application of :
Donald L. Ambrose :
Application No. 11/800,154 : ON PETITION
Filed: May 3, 2007 :
Attorney Docket No. 10006-03

This is a decision on the petition under 37 CFR 1.137(b) filed March 23, 2010.

The petition is GRANTED.

This application became abandoned for failure to respond in a proper and timely manner to the Notice of Allowance and Issue Due mailed December 22, 2008. The notice set a statutory period for reply of three-months from its mailing date. Extensions of time were available pursuant to 37 CFR 1.136(a). A response was not received within the allowable period and the application became abandoned on March 23, 2009. A Notice of Abandonment was mailed on April 9, 2009.

The issue fee and publication fee were received on March 23, 2010.

Telephone inquiries concerning this decision may be directed to the undersigned at (571) 272-3222.

Kenya A. McLaughlin
Petitions Attorney
Office of Petitions

UNITED STATES PATENT AND TRADEMARK OFFICE

Commissioner for Patents
United States Patent and Trademark Office
P.O. Box 1450
Alexandria, VA 22313-1450
www.uspto.gov

Charles J. Prescott, P.A.
Suite 115
2033 Wood Street
Sarasota, FL 34237

COPY MAILED

SEP 27 2007

OFFICE OF PETITIONS

In re Application of	:	
Ronald J. Sargent	:	
Application No. 11/800,197	:	DECISION ON PETITION
Filed: May 4, 2007	:	TO MAKE SPECIAL UNDER
Attorney Docket No. P-2050	:	37 CFR 1.102(c)(1)
	:	

This is a decision on the petition under 37 CFR 1.102(c)(1), filed May 4, 2007, to make the above-identified application special based on applicant's age as set forth in M.P.E.P. § 708.02, Section IV.

The petition is **GRANTED**.

A grantable petition to make an application special under 37 CFR 1.102(c)(1) and MPEP § 708.02, Section IV: Applicant's Age must be accompanied by evidence showing that at least one of the applicants is 65 years of age, or more, such as a birth certificate or a statement by applicant. No fee is required

The instant petition includes an affidavit by the applicant. Accordingly, the above-identified application has been accorded "special" status.

Telephone inquiries concerning this decision should be directed to Kimberly Inabinet at 571-272-4618.

All other inquiries concerning either the examination or status of the application should be directed to the Technology Center.

Upon completion of the pre-examination processing by the Office of Initial Patent Examining, this application will be referred to Technology Center Art Unit 3752 for action on the merits commensurate with this decision.

Kimberly Inabinet
Petitions Examiner
Office of Petitions

UNITED STATES PATENT AND TRADEMARK OFFICE

Commissioner for Patents
United States Patent and Trademark Office
P.O. Box 1450
Alexandria, VA 22313-1450
www.uspto.gov

COPY MAILED

JUN 23 2008

OFFICE OF PETITIONS

Richard B. Klar
28 E Old Country Road
Hicksville NY 11801

In re Application of
Barthelmess
Application No. 11/800,202
Filed: May 4, 2007
Attorney Docket No. 122RK303U
For: PATIO TROPICAL TREE

ON PETITION

This is a decision on the petition under 37 CFR 1.137(b), filed March 17, 2008 (certificate of mailing date March 14, 2008), to revive the above-identified application.

The petition under 37 CFR 1.137(b) is **GRANTED**.

This application became abandoned for failure to timely reply to the Notice to File Corrected Application Papers, mailed June 1, 2007, which set a two month shortened statutory period for reply. No extensions of time having been obtained pursuant to 37 CFR 1.136(a) and no reply being received in the Office, this application became abandoned on August 2, 2007. A Notice of Abandonment was mailed on February 11, 2008.

Applicant has submitted a proper reply to the June 1, 2007 Notice in the form of replacement drawings, an acceptable statement of the unintentional nature of the delay in responding to the June 1, 2007 Notice, and the petition fee. Accordingly, the petition under 37 CFR 1.137(b) is granted.

The application file does not indicate a change of address has been filed in this case, although the address given on the petition differs from the address of record. A change of address should be filed in this case in accordance with MPEP 601.03. A courtesy copy of this decision is being mailed to the address noted on the petition. However, until otherwise instructed, all future correspondence regarding this application will be mailed solely to the address of record.

After the mailing of this decision, the file will be returned to the Office of Patent Application Processing for further pre-examination processing.

Telephone inquiries concerning this matter may be directed to the undersigned at (571) 272-3230.

Shirene Willis Brantley
Senior Petitions Attorney
Office of Petitions

CC: RICHARD B. KLAR
145 WILLIS AVENUE
MINEOLA NY 11501

UNITED STATES PATENT AND TRADEMARK OFFICE

Commissioner for Patents
United States Patent and Trademark Office
P.O. Box 1450
Alexandria, VA 22313-1450
www.uspto.gov

CHERNOFF, VILHAUER, MCCLUNG & STENZEL
1600 ODS TOWER
601 SW SECOND AVENUE
PORTLAND, OR 97204-3157

COPY MAILED

AUG 22 2008

In re Application of	:	
Sean K. **SCORVO,** et al	:	
Application No. 11/800,221	:	DECISION ON PETITION
Filed: May 4, 2007	:	TO WITHDRAW
Attorney Docket No. DBH.8979.0001	:	FROM RECORD
	:	

This is a decision on the Request to Withdraw as attorney or agent of record under 37 C.F.R. § 1.36(b), filed July 11, 2008.

The request is **APPROVED**.

A grantable request to withdraw as attorney/agent of record must be signed by every attorney/agent seeking to withdraw or contain a clear indication that one attorney is signing on behalf of another/others. The Office requires the practitioner(s) requesting withdrawal to certify that he, she, or they have: (1) given reasonable notice to the client, prior to the expiration of the response period, that the practitioner(s) intends to withdraw from employment; (2) delivered to the client or a duly authorized representative of the client all papers and property (including funds) to which the client is entitled; and (3) notified the client of any responses that may be due and the time frame within which the client must respond, pursuant 37 CFR 10.40(c).

The request was signed by Donald B. Haslett on behalf of all attorneys of record who are associated with Customer No. 00152.

All attorneys/agents associated with the Customer Number 00152 have been withdrawn.

Applicant is reminded that there is no attorney of record at this time.

All future correspondence will be directed to the first named inventor Sean K. Scorvo at the first copied address indicated below until otherwise properly notified by the applicant.

In order to request or take action in a patent matter, the assignee must establish its ownership of the patent to the satisfaction of the Director. In this regard, a Statement under 37 CFR 3.73(b) must have either: (i) documentary evidence of a chain of title from the original owner to the assignee (*e.g.*, copy of an executed assignment), and a statement affirming that the documentary evidence of the chain of title from the original owner to the assignee was or concurrently is being submitted for recordation pursuant to § 3.11; or (ii) a statement specifying where documentary evidence of a chain of title from the original owner to the assignee is recorded in the assignment records of the Office (*e.g.*, reel and frame number).

Telephone inquiries concerning this decision should be directed to the undersigned at 571-272-6735.

Diane Goodwyn
Petitions Examiner
Office of Petitions

cc: SEAN K. SCORVO
1525 N.E. FREMONT
PORTLAND, OR 97212

UNITED STATES PATENT AND TRADEMARK OFFICE

Commissioner for Patents
United States Patent and Trademark Office
P.O. Box 1450
Alexandria, VA 22313-1450
www.uspto.gov

HRL LABORATORIES, LLC
3011 MALIBU CANYON RD.
MALIBU, CA 90265

MAILED

MAY 14 2010

OFFICE OF PETITIONS

In re Application of
Randall L. Kubena, et al.
Application No. 11/800,294
Filed: May 4, 2007
Attorney Docket No. 010707-DIV-DIV-001

DECISION ON PETITION

This is a decision on the petition under the unintentional provisions of 37 CFR 1.137(b), filed March 22, 2010, to revive the above-identified application.

This application became abandoned for failure to timely pay the issue and publication fees on or before March 1, 2010, as required by the Notice of Allowance and Fee(s) Due, mailed November 30, 2009. Accordingly, the date of abandonment of this application is March 2, 2010.

The petition satisfies the requirements of 37 CFR 1.137(b) in that petitioner has supplied (1) the reply in the form of payment of the issue fee of $1510 and the publication fee of $300, (2) the petition fee of $1620; and (3) a proper statement of unintentional delay.

In view of the above, the petition is **GRANTED**.

Telephone inquiries concerning this decision should be directed to undersigned at (571) 272-1642. All other inquiries concerning this application should be directed to the Office of Data Management at their hotline 571-272-4200.

This application is being referred to the Office of Data Management for processing into a patent.

April M. Wise
Petitions Examiner
Office of Petitions

UNITED STATES PATENT AND TRADEMARK OFFICE

Commissioner for Patents
United States Patent and Trademark Office
P.O. Box 1450
Alexandria, VA 22313-1450
www.uspto.gov

MIKAEL HAVLUCIYAN
300 W. BEACH ST. # 703
SAN DIEGO, CA 92101

COPY MAILED

JUN 2 3 2008

OFFICE OF PETITIONS

In re Application of	:	
Siminou et al.	:	
Application No. 11/800,333	:	DECISION ON PETITION
Filed: May 5, 2007	:	
Attorney Docket No. 39569-2667B	:	

This is a decision on the petition under the unintentional provisions of 37 CFR 1.137(b), filed May 27, 2008, to revive the above-identified application.

The petition is **GRANTED**.

The petition satisfies the requirements of 37 CFR 1.137(b) in that petitioner has supplied (1) the reply in the form of an Amendment, (2) the petition fee, and (3) a proper statement of unintentional delay.

An extension of time under 37 CFR 1.136 must be filed prior to the expiration of the maximum extendable period for reply. See In re Application of S., 8 USPQ2d 1630, 1631 (Comm'r Pats. 1988). Accordingly, since the $525.00 extension of time fee submitted with the petition on May 27, 2008 was subsequent to the maximum extendable period for reply, this fee is unnecessary and will be refunded to petitioner's credit card.

Telephone inquiries concerning this decision should be directed to the undersigned at (571) 272-3206.

This matter is being referred to Technology Center 2873 for further examination on the merits.

Liana Walsh
Petitions Examiner
Office of Petitions

UNITED STATES PATENT AND TRADEMARK OFFICE

Commissioner for Patents
United States Patent and Trademark Office
P.O. Box 1450
Alexandria, VA 22313-1450
www.uspto.gov

ERNEST D. BUFF
ERNEST D. BUFF AND ASSOCIATES, LLC.
231 SOMERVILLE ROAD
BEDMINSTER NJ 07921

COPY MAILED

MAR 30 2009

OFFICE OF PETITIONS

In re Application of :
FARRINGTON, Robyn J. :
Application No. 11/800,390 : DECISION ON PETITION
Filed: May 04, 2007 : TO WITHDRAW
Attorney Docket No. **0342-2** : FROM RECORD

This is a decision on the Request to Withdraw as attorney or agent of record under 37 C.F.R. § 1.36(b), filed February 23, 2009.

The request is **NOT APPROVED**.

A grantable request to withdraw as attorney/agent of record must be signed by every attorney/agent seeking to withdraw or contain a clear indication that one attorney is signing on behalf of another/others. The Office requires the practitioner(s) requesting withdrawal to certify that he, she, or they have: (1) given reasonable notice to the client, prior to the expiration of the response period, that the practitioner(s) intends to withdraw from employment; (2) delivered to the client or a duly authorized representative of the client all papers and property (including funds) to which the client is entitled; and (3) notified the client of any responses that may be due and the time frame within which the client must respond, pursuant 37 CFR 10.40(c).

The request cannot be approved because there is no indication that act two (2) noted in the above-identified certifications has been performed.

All future communications from the Office will continue to be directed to the above-listed address until otherwise notified by applicant.

Telephone inquiries concerning this decision should be directed to Michelle R. Eason at 571-272- 4231.

Michelle R. Eason
Paralegal Specialist
Office of Petitions

cc: **ROBYN J. FARRINGTON**
PO BOX 2
WESTFIELD, NJ 07091

UNITED STATES PATENT AND TRADEMARK OFFICE

Commissioner for Patents
United States Patent and Trademark Office
P.O. Box 1450
Alexandria, VA 22313-1450
www.uspto.gov

ERNEST D. BUFF
ERNEST D. BUFF AND ASSOCIATES, LLC.
231 SOMERVILLE ROAD
BEDMINSTER NJ 07921

MAILED

MAY 22 2009

OFFICE OF PETITIONS

In re Application of	:	
FARRINGTON, Robyn J.	:	
Application No. 11/800,390	:	DECISION ON PETITION
Filed: May 04, 2007	:	TO WITHDRAW
Attorney Docket No. **0342-2**	:	FROM RECORD
	:	

This is a decision on the renewed Request to Withdraw as attorney or agent of record under 37 C.F.R. § 1.36(b), filed April 13, 2009.

The request is **APPROVED**.

A grantable request to withdraw as attorney/agent of record must be signed by every attorney/agent seeking to withdraw or contain a clear indication that one attorney is signing on behalf of another/others. The Office requires the practitioner(s) requesting withdrawal to certify that he, she, or they have: (1) given reasonable notice to the client, prior to the expiration of the response period, that the practitioner(s) intends to withdraw from employment; (2) delivered to the client or a duly authorized representative of the client all papers and property (including funds) to which the client is entitled; and (3) notified the client of any responses that may be due and the time frame within which the client must respond, pursuant 37 CFR 10.40(c).

The request was signed by Ernest D. Buff on behalf of all attorneys of record. All attorneys/agents associated have been withdrawn. Applicant is reminded that there is no attorney of record at this time.

All future correspondence will be directed to the first named inventor Robyn J. Farrington at the address indicated below.

There is an outstanding Office action mailed December 26, 2008 that requires a reply from the applicant.

Telephone inquiries concerning this decision should be directed to Michelle R. Eason at 571-272-4231.

Michelle R. Eason
Paralegal Specialist
Office of Petitions

cc: **ROBYN J. FARRINGTON**
PO BOX 2
WESTFIELD, NJ 07091

UNITED STATES PATENT AND TRADEMARK OFFICE

Commissioner for Patents
United States Patent and Trademark Office
P.O. Box 1450
Alexandria, VA22313-1450
www.uspto.gov

COPY MAILED

OCT 11 2007

OFFICE OF PETITIONS

DERGOSITS & NOAH LLP
FOUR EMBARCADERO CENTER, SUITE 1450
SAN FRANCISCO CA 94111

In re Application of
Christopher B. Wright
Application No. 11/800,401
Filed: May 4, 2007
Attorney Docket No. 825.09

: DECISION REFUSING STATUS
: UNDER 37 CFR 1.47(b)

This is in response to the petition under 37 CFR 1.47(b), filed October 3, 2007.

The petition is **DISMISSED**.

Rule 47 applicant is given TWO MONTHS from the mailing date of this decision to reply, correcting the below-noted deficiencies. Any reply should be entitled "Request for Reconsideration of Petition Under 37 CFR 1.47(b)," and should only address the deficiencies noted below, except that the reply may include an oath or declaration executed by the non-signing inventor. **FAILURE TO RESPOND WILL RESULT IN ABANDONMENT OF THE APPLICATION**. Extensions of time may be obtained in accordance with 37 CFR 1.136(a).

The above-identified application was filed on May 4, 2007 with an unsigned oath or declaration. Accordingly, on June 1, 2007, a "Notice To File Missing Parts of Nonprovisional Application" was mailed, requiring an executed oath or declaration and a surcharge for the late filing of the oath or declaration.

In response, the present petition was filed, accompanied by the late filing surcharge and a two (2) month extension of time request dated September 28, 2007.

A grantable petition under 37 CFR 1.47(b) requires:

(1) proof that the non-signing inventor cannot be reached or refuses to sign the oath or declaration after having been presented with the application papers (specification, claims and drawings);

(2) an acceptable oath or declaration in compliance with 35 U.S.C. §§ 115 and 116;

(3) the petition fee;

(4) a statement of the last known address of the non-signing inventor;

(5) proof of proprietary interest, and

(6) proof of irreparable damage.

Petitioners assert that the sole inventor, Christopher B. Wright is now deceased, having died April 18, 2007 prior to the filing of the instant application and thus can not sign the oath or declaration.

37 CFR 1.42 states, in part:

> In the case of the death of the inventor, the legal representative (executor, administrator, etc.) of the deceased inventor may make the necessary oath or declaration, and apply for and obtain the patent..

The present petition lacks items (1), (2) and (4).

At the outset, petitioners are advised that 37 CFR 1.47 is not considered an alternative to 37 CFR 1.42 since the language "cannot be found or reached after diligent effort" has no reasonable application to a deceased inventor.[1] 37 CFR 1.42 states that when the inventor is dead, the legal representative may make the necessary oath or declaration. 37 CFR 1.47 will apply when a known legal representative cannot be found or refuses to sign the declaration. In such cases, the last known address of the legal representative must be established before the grant of a patent.[2] Presumably a legal representative has been named to the estate of Mr. Wright.

To establish 37 CFR 1.47 status, petitioner must submit a 37 CFR 1.47 petition on behalf of the legal representative of the deceased inventor.

In regards to item (1), where inability to find or locate a named inventor(s), or legal representative thereof, is alleged, a statement of facts should be submitted that fully describes the exact facts which are relied on to establish that a *diligent effort* was made to locate the inventor. The statement(s) of facts must be signed, where at all possible, by a person having *firsthand knowledge* of the facts recited therein. Statements based on hearsay, will not normally be accepted. Petitioners should demonstrate that a thorough inspection of sources including, but not limited to, personnel or payroll records and probate filings. In this case, a thorough search of probate filings for Mr. Wright would be appropriate. Petitioners should use diligent efforts to determine the current or last known address of the nearest living relative of the deceased inventor. Copies of the results of the search must be referred to in any renewed petition.[3]

---

[1] *In re Application Papers Filed September 10, 1954*, 108 USPQ 340 (Comm'r Pat. 1955).

[2] See 37 CFR 1.42.

[3] See MPEP 409.03(d).

Additionally, Mr. Wright's legal representative or heirs will have to be proffered the complete application papers (specification, including claims, drawings, if any, and the declaration) for signature.[4] In the event that the legal representative or heirs refuse to sign the declaration, petitioners may provide proof that a copy of the application was sent or given to the legal representative for review by providing, with a renewed petition, a copy of the cover letter transmitting the application papers to the legal representative or details given in an affidavit or declaration of facts by a person having first-hand knowledge of the details.

In the event that Mr. Wright's legal representative refuses in writing to sign the declaration, petitioners should provide a copy of the written refusal with any renewed petition. If the refusal is made orally to a person, then that person must provide details of the refusal in an affidavit or declaration of facts.

In regards to item (2), the oath or declaration must identify the name, residence, mailing address, and citizenship of the inventor and the legal representative of the deceased inventor, and state that the legal representative is signing on behalf of the deceased joint inventor. A new oath or declaration in compliance with 37 CFR 1.63 and 1.64, containing the information described in this paragraph, is required.

In reference to item (4), above, the petition must include the last known address of the legal representative of the deceased joint inventor.

Further correspondence with respect to this matter should be addressed as follows:

By Mail: Mail Stop PETITIONS
Commissioner for Patents
Post Office Box 1450
Alexandria, VA 22313-1450

By fax: (571) 273-8300
ATTN: Office of Petitions

Telephone inquiries concerning this matter may be directed to the undersigned Petitions Attorney at (571) 272-3212.

Patricia Faison-Ball

Patricia Faison-Ball
Senior Petitions Attorney
Office of Petitions

---

[4] See also MPEP 409.01(a),(b); 409.03(c).

UNITED STATES PATENT AND TRADEMARK OFFICE

Commissioner for Patents
United States Patent and Trademark Office
P.O. Box 1450
Alexandria, VA 22313-1450
www.uspto.gov

DERGOSITS & NOAH LLP
FOUR EMBARCADERO CENTER, SUITE 1450
SAN FRANCISCO CA 94111

COPY MAILED

JUN 09 2008

OFFICE OF PETITIONS

In re Application of
Christopher B. Wright
Application No. 11/800,401
Filed: May 4, 2007
Attorney Docket No. 825.09

: ON PETITION

A petition under 37 CFR 1.47(b)[1] was filed October 3, 2007 and was dismissed in a decision mailed October 11, 2007. Papers filed January 8, 2008, in reply to the "Decision Refusing Status Under 37 CFR 1.47(b)" mailed October 8, 2007, include a declaration signed by the previously non-signing legal representative, Joseph Wright, on behalf of deceased inventor Christopher B. Wright and a one month extension of time.

The petition is **DISMISSED**.

The above-identified application was filed on May 4, 2007 with an unsigned oath or declaration. Accordingly, on June 1, 2007, a "Notice To File Missing Parts of Nonprovisional Application" was mailed, requiring an executed oath or declaration and a surcharge for the late filing of the oath or declaration. In response, a petition was filed October 3, 2007 accompanied by the late filing surcharge and a two (2) month extension of time request, with a certificate of mail dated September 28, 2007.

While the October 3, 2007 asserted that the sole inventor, Christopher B. Wright is deceased, having died April 18, 2007 prior to the filing of the instant application and thus could not sign the oath or declaration, the petition lacked items (1), (2) and (4).

The instant request for reconsideration however while it provides an oath or declaration executed by the legal representative on behalf of deceased inventor Christopher B. Wright and thus obviating a need for status under 37 CFR 1.47(b),[2] an oath or

---

[1]A grantable petition under 37 CFR 1.47(b) requires:
(1) proof that the non-signing inventor cannot be reached or refuses to sign the oath or declaration after having been presented with the application papers (specification, claims and drawings);
(2) an acceptable oath or declaration in compliance with 35 U.S.C. §§ 115 and 116;
(3) the petition fee;
(4) a statement of the last known address of the non-signing inventor;
(5) proof of proprietary interest, and
(6) proof of irreparable damage.

[2]37 CFR 1.42 states, in part:

In the case of the death of the inventor, the legal representative (executor, administrator, etc.) of the deceased inventor may make the necessary oath or declaration, and apply for and obtain the patent.

declaration for the patent application in compliance with 37 CFR 1.63 and 1.64 has not been presented. The oath or declaration is defective in that the oath or declaration must identify the inventor by full name, including the family name and at least one give name without abbreviation, together with any other given name or initial. The oath or declaration must also identify the country of citizenship of the inventor.

This matter will be held in abeyance in the Office of Petitions for TWO (2) MONTHS to await petitioner's submission of a new oath or declaration in compliance with 37 CFR 1.63 and 1.64, containing the information described above, with a renewed petition. **FAILURE TO RESPOND WILL RESULT IN ABANDONMENT OF THE APPLICATION**

Further correspondence with respect to this matter should be addressed as follows:

By mail: Mail Stop Petitions
Commissioner for Patents
P.O. Box 1450
Alexandria VA 22313-1450

By FAX: (571) 273-8300
Attn: Office of Petitions

Telephone inquiries concerning this matter may be directed to the undersigned Petitions Attorney at (571) 272-3212.

Patricia Faison-Ball

Patricia Faison-Ball
Senior Petitions Attorney
Office of Petitions

UNITED STATES PATENT AND TRADEMARK OFFICE

Commissioner for Patents
United States Patent and Trademark Office
P.O. Box 1450
Alexandria, VA 22313-1450
www.uspto.gov

DERGOSITS & NOAH LLP
FOUR EMBARCADERO CENTER, SUITE 1450
SAN FRANCISCO CA 94111

COPY MAILED

OCT 21 2008

OFFICE OF PETITIONS

In re Application of
Christopher B. Wright
Application No. 11/800,401
Filed: May 4, 2007
Attorney Docket No. 825.09

: ON PETITION

A petition under 37 CFR 1.47(b) was filed October 3, 2007 and was dismissed in a decision mailed October 11, 2007. A request for reconsideration was filed January 8, 2008 and dismissed in a decision mailed June 9, 2008.

Papers filed July 11, 2008 in reply to the "Decision Refusing Status Under 37 CFR 1.47(a)" mailed June 9, 2008, include a declaration signed by Joe Wright III, legal representative, on behalf of deceased inventor Christopher Wright and in compliance with 37 CFR 1.63.

In view of the joinder of the legal representative, further consideration under 37 CFR 1.47(a) is unnecessary.

The renewed petition filed July 11, 2008 is **DISMISSED** as involving moot issues.

This application does not have any rule 1.47(a) status and no such status should appear on the file wrapper. This application need not be returned to this office for any further consideration under 37 CFR 1.47(a).

This matter will be referred to Technology Center 2854 for examination in due course.

Telephone inquiries related to this decision should be directed to the undersigned Petitions Attorney at (571) 272-3212.

Patricia Faison-Ball

Patricia Faison-Ball
Senior Petitions Attorney
Office of Petitions

UNITED STATES PATENT AND TRADEMARK OFFICE

Commissioner for Patents
United States Patent and Trademark Office
P.O. Box 1450
Alexandria, VA 22313-1450
www.uspto.gov

BUSH INTELLECTUAL PROPERTY LAW GROUP, LLC
P.O. BOX 381146
BIRMINGHAM AL 35238

COPY MAILED

JAN 0 8 2008

OFFICE OF PETITIONS

In re Application of
CRIDER, Grant W.
Application No. 11/800,425
Filed: May 4, 2007
Attorney Docket No. **CRIDER 14**

DECISION ON PETITION
TO MAKE SPECIAL UNDER
37 CFR 1.102(c)(1)

This is a decision on the petition under 37 CFR 1.102(c)(1), filed December 18, 2007, to make the above-identified application special based on applicant's age as set forth in M.P.E.P. § 708.02, Section IV.

The petition is **GRANTED.**

A grantable petition to make an application special under 37 CFR 1.102(c)(1) and MPEP § 708.02, Section IV: Applicant's Age must be accompanied by evidence showing that at least one of the applicants is 65 years of age, or more, such as a birth certificate or a statement by applicant. No fee is required

The instant petition includes the declaration of inventor Grant W. Crider, attesting to his age. Accordingly, the above-identified application has been accorded "special" status.

Inquiries concerning either the examination or status of the application should be directed to the Technology Center at (571) 272-3600.

Telephone inquiries concerning this decision should be directed to the undersigned at 571-272-7253.

The application is being forwarded to the Technology Center AU 3634 for action on the merits commensurate with this decision.

Monica A. Graves
Petitions Examiner
Office of Petitions

UNITED STATES PATENT AND TRADEMARK OFFICE

Commissioner for Patents
United States Patent and Trademark Office
P.O. Box 1450
Alexandria, VA 22313-1450
www.uspto.gov

FINNEGAN, HENDERSON, FARABOW,
GARRENT & DUNNER LLP
901 NEW YORK AVENUE, NW
WASHINGTON, DC 20001-4413

COPY MAILED

AUG 1 0 2009

OFFICE OF PETITIONS

In re Application of	:	
David Pilling et al.	:	
Application No. 11/800,438	:	DECISION ON PETITION
Filed: May 4, 2007	:	TO WITHDRAW
Attorney Docket No. **IDT-2816**	:	FROM RECORD
	:	

This is a decision on the Request to Withdraw as attorney or agent of record under 37 CFR § 1.36(b), filed July 9, 2009.

The request is **NOT APPROVED** as moot.

A review of the file record indicates that the power of attorney to attorneys/agents associated with Customer Number 22852 has been revoked by the assignee of the patent application on July 1, 2009. Accordingly, the request to withdraw under 37 C.F.R. § 1.36(b) is moot.

All future communications from the Office will continue to be directed to the below-listed address until otherwise notified by applicant.

Telephone inquires concerning this decision should be directed to JoAnne Burke at 571-272-4584.

JoAnne Burke
Petitions Examiner
Office of Petitions

cc: INTEGRATED DEVICE TECHNOLOGY, INC.
6024 SILVER CREEK VALLEY RD.
SAN JOSE CA 95138

UNITED STATES PATENT AND TRADEMARK OFFICE

Commissioner for Patents
United States Patent and Trademark Office
P.O. Box 1450
Alexandria, VA 22313-1450
www.uspto.gov

GREENBERG TRAURIG, LLP (SV2)
2450 COLORADO AVENUE, SUITE 400E
SANTA MONICA, CA 90404

COPY MAILED

MAR 26 2009

OFFICE OF PETITIONS

In re Application of	
Andreas HIEKE	
Application No. 11/800,458	DECISION ON PETITION
Filed: May 4, 2007	TO WITHDRAW
Attorney Docket No. 102064.00002	FROM RECORD

This is a decision on the Request to Withdraw as attorney or agent of record under 37 C.F.R. § 1.36(b), filed October 8, 2008.

The request is **NOT APPROVED** as moot.

A review of the file record indicates that the power of attorney to Greenberg Traurig, LLP, has been revoked by the applicant of the patent application on January 23, 2009. Accordingly, the request to withdraw under 37 C.F.R. § 1.36(b) is moot.

All future communications from the Office will be directed to the address indicated below until otherwise properly notified by the applicant.

Telephone inquires concerning this decision should be directed to the undersigned at 571-272-6735.

Diane Goodwyn
Petitions Examiner
Office of Petitions

cc: SQUIRE, SANDERS & DEMPSEY L.L.P.
PATENT DEPARTMENT
ONE MARITIME PLAZA, SUITE 300
SAN FRANCISCO, CA 94111-3492

UNITED STATES PATENT AND TRADEMARK OFFICE

UNITED STATES DEPARTMENT OF COMMERCE
United States Patent and Trademark Office
Address: COMMISSIONER FOR PATENTS
P.O. Box 1450
Alexandria, Virginia 22313-1450
www.uspto.gov

APPLICATION NO.	FILING DATE	FIRST NAMED INVENTOR	ATTORNEY DOCKET NO.	CONFIRMATION NO.
11/800,462	05/04/2007	Y. Sean Lin	012040 USA AGS/ESOL	8841

7590 05/20/2010
BLAKELY, SOKOLOFF, TAYLOR & ZAFMAN
1279 Oakmead Parkway
Sunnyvale, CA 94085-4040

EXAMINER
LEE, DOUGLAS S

ART UNIT	PAPER NUMBER
2121	

MAIL DATE	DELIVERY MODE
05/20/2010	PAPER

Please find below and/or attached an Office communication concerning this application or proceeding.

The time period for reply, if any, is set in the attached communication.

UNITED STATES PATENT AND TRADEMARK OFFICE

Commissioner for Patents
United States Patent and Trademark Office
P.O. Box 1450
Alexandria, VA 22313-1450
www.uspto.gov

BLAKELY, SOKOLOFF, TAYLOR & ZAFMAN
1279 Oakmead Parkway
Sunnyvale CA 94085-4040

In re Application of:
Sean Y. Lin et al.
Application No. 11/800,462
Filed: March 4, 2007
For: GRAPHICAL USER INTERFACE FOR PRESENTING MULTIVARIATE FAULT CONTRIBUTIONS

DECISION ON PETITION UNDER 37 C.F.R. 1.84(a)(2) TO ACCEPT COLOR DRAWINGS

This is a decision on the petition under 37 C.F.R. 1.84(a)(2), filed May 4, 2007 requesting acceptance of color drawings.

The petition requests that the color drawings, although not specifically identified but noted as, figures 2-5 and 6A-6B be accepted in lieu of black and white drawings.

A grantable petition under 37 C.F.R. 1.84(a)(2) must be accompanied by a fee set forth under 37 C.F.R. 1.17(h), 3 (three) sets of the color drawings in question, and the specification must contain, or be amended to contain, the following language as the first paragraph in that portion of the specification relating to the brief description of the drawings:

"the file of this patent contains at least one drawing executed in color. Copies of this patent with color drawing(s) will be provided by the Patent and Trademark Office upon request and payment of the necessary fee."

The petition was filed with the required fee, three (3) sets of color drawings of Figures 2-5 and 6A – 6B and the specification contains the required notification described above in paragraph [0007].

The petition is **GRANTED**.

The application file is being forwarded to Publications Branch to complete preparation for issue.

/Kakali Chaki/

Kakali Chaki
Quality Assurance Specialist
Technology Center 2100

UNITED STATES PATENT AND TRADEMARK OFFICE

UNITED STATES DEPARTMENT OF COMMERCE
United States Patent and Trademark Office
Address: COMMISSIONER FOR PATENTS
P.O. Box 1450
Alexandria, Virginia 22313-1450
www.uspto.gov

APPLICATION NO.	FILING DATE	FIRST NAMED INVENTOR	ATTORNEY DOCKET NO.	CONFIRMATION NO.
11/800,465	05/04/2007	Roland Springholz	20060676-02	8844

7590 11/30/2009
AGILENT TECHNOLOGIES INC.
INTELLECTUAL PROPERTY ADMINISTRATION,LEGAL DEPT.
MS BLDG. E P.O. BOX 7599
LOVELAND, CO 80537

EXAMINER

ART UNIT	PAPER NUMBER
2457	

NOTIFICATION DATE	DELIVERY MODE
11/30/2009	ELECTRONIC

DECISION GRANTING PETITION UNDER 37 CFR 1.138(d)

The declaration of express abandonment is recognized

This is in response to the petition under 37 CFR 1.138(d), requesting for a refund of any previously paid search fee and excess claims fee in the above-identified application.

The petition is granted.

The express abandonment is recognized. Any previously paid search fee and excess claims fee are hereby refunded.

Telephone inquiries should be directed to the Office of Data Management at (571) 272-4200.

Nimi Farmer

Patent Publication Branch
Office of Data Management

Adjustment date: 11/25/2009 NFARMER
05/08/2007 TNGUYEN2 02200072 501078 11800465
02 FC:1111 500.00 CR
04 FC:1202 450.00 CR

FORM PET651G (Rev. 08/07)

UNITED STATES PATENT AND TRADEMARK OFFICE

Commissioner for Patents
United States Patent and Trademark Office
P.O. Box 1450
Alexandria, VA 22313-1450
www.uspto.gov

COPY MAILED

OCT 0 1 2009

OFFICE OF PETITIONS

ABELMAN, FRAYNE & SCHWAB
666 THIRD AVENUE, 10TH FLOOR
NEW YORK NY 10017

In re Application of
Bleicher, et al.
Application No. 11/800,484
Filed: May 4, 2007
Attorney Docket No. 208,221
For: SUCTION DEVICE FOR PICK POWER TOOL

: DECISION ON PETITION
: UNDER 37 CFR 1.181

This is a decision on the petition under 37 CFR 1.181, filed September 11, 2009, to withdraw the holding of abandonment of the above-identified application.

The petition under 37 CFR 1.181 is **GRANTED**.

This application was held abandoned due to applicants' alleged failure to reply within an extendable three month period of the mailing of the February 11, 2009 non-final Office action. The Office contended that this application became abandoned on May 12, 2009. A Notice of Abandonment was mailed on September 9, 2009.

Petitioners assert that a reply was timely received in the Office on May 5, 2009. In support of this assertion, petitioners have provided a copy of applicants' itemized postcard receipt showing an Office of Initial Patent Examination date stamp, citing May 5, 2009 as the date of receipt, affixed thereto. The postcard lists, *inter alia*, that the filing included an amendment, a new executed declaration, and IDS with PTO-1449, and a check for $180.00. A review of the application file reveals that the IDS and PTO-1449 and the check for $180.00 are present.

The return postcard constitutes *prima facie* evidence that the items listed thereon were received in the Office on May 5, 2009. MPEP 503. Petitioners have provided a copy of the May 5, 2009 correspondence. A review of the copy of the correspondence reveals that applicants properly identified the application to which the correspondence pertained. It appears that the amendment and new executed declaration were properly filed and then misplaced in the Office.

Accordingly, the petition to withdraw the holding of abandonment is granted.

After the mailing of this decision, the application file will be returned to Technology Center A.U. 3723 for consideration of the amendment filed on May 5, 2009 and resubmitted with the present petition on September 11, 2009.

Any inquiries pertaining to this matter may be directed to the undersigned at (571) 272-3230.

Shirene Willis Brantley

Shirene Willis Brantley
Senior Petitions Attorney
Office of Petitions
Office of the Deputy Commissioner
for Patent Examination Policy

UNITED STATES PATENT AND TRADEMARK OFFICE

Commissioner for Patents
United States Patent and Trademark Office
P.O. Box 1450
Alexandria, VA 22313-1450
www.uspto.gov

COPY MAILED
AUG 0 2 2007
OFFICE OF PETITIONS

LERNER GREENBERG STEMER LLP
P O BOX 2480
HOLLYWOOD FL 33022-2480

In re Application of	:	
W. THOMAS MCCLELLAN	:	
Application No. 11/800,499	:	DECISION ON PETITION
Filed: May 04, 2007	:	TO MAKE SPECIAL UNDER
Attorney Docket No. **TMF-9010**	:	37 CFR 1.102(c)(1)
	:	

This is a decision on the petition under 37 CFR 1.102(c)(1), filed May 04, 2007, to make the above-identified application special based on applicant's age as set forth in M.P.E.P. § 708.02, Section IV.

The petition is **GRANTED**.

A grantable petition to make an application special under 37 CFR 1.102(c)(1) and MPEP § 708.02, Section IV: Applicant's Age must be accompanied by evidence showing that at least one of the applicants is 65 years of age, or more, such as a birth certificate or a statement by applicant. No fee is required

The instant petition includes a copy of William T. McClellan's driver's license attesting to his age. Accordingly, the above-identified application has been accorded "special" status.

Telephone inquiries concerning this decision should be directed to Tredelle Jackson at 571-272-2783.

All other inquiries concerning either the examination or status of the application should be directed to the Technology Center.

The application is being forwarded to the Technology Center Art Unit 3682 for action on the merits commensurate with this decision.

Monica A. Graves
Petitions Examiner
Office of Petitions

UNITED STATES PATENT AND TRADEMARK OFFICE

Commissioner for Patents
United States Patent and Trademark Office
P.O. Box 1450
Alexandria, VA 22313-1450
www.uspto.gov

COPY MAILED

JUL 06 2007

OFFICE OF PETITIONS

ROBERT FARRIS
113 RODBOROUGH ROAD
COLUMBIA, SC 29212

In re Application of

Robert Ray FARRIS
Application No. 11/800,519
Filed: May 7, 2007
Attorney Docket No.

DECISION ON PETITION
TO MAKE SPECIAL UNDER
37 CFR 1.102(c)(1)

This is a decision on the petition under 37 CFR 1.102(c)(1), filed May 7, 2007, to make the above-identified application special based on applicant's age as set forth in M.P.E.P. § 708.02, Section IV.

The petition is **GRANTED**.

A grantable petition to make an application special under 37 CFR 1.102(c)(1) and MPEP § 708.02, Section IV: Applicant's Age must be accompanied by evidence showing that at least one of the applicants is 65 years of age, or more, such as a birth certificate or a statement by applicant. No fee is required

The instant petition includes a statement by applicant. Accordingly, the above-identified application has been accorded "special" status.

Telephone inquiries concerning this decision should be directed to Diane Goodwyn at 571-272-6735.

This application is being referred to the Office Initial Patent Examination for processing. This application will be accorded "special" status when pre-examination processing is done.

April Wise
Petitions Examiner
Office of Petitions

UNITED STATES PATENT AND TRADEMARK OFFICE

Commissioner for Patents
United States Patent and Trademark Office
P.O. Box 1450
Alexandria, VA 22313-1450
www.uspto.gov

COPY MAILED

OCT 01 2009

OFFICE OF PETITIONS

ABELMAN, FRAYNE & SCHWAB
666 THIRD AVENUE, 10TH FLOOR
NEW YORK NY 10017

In re Application of	:	
GROPPE, David	:	
Application No. 11/800,530	:	DECISION ON PETITION
Filed: May 03, 2007	:	TO WITHDRAW
Attorney Docket No. **208,248**	:	FROM RECORD
	:	

This is a decision on the Request to Withdraw as attorney or agent of record under 37 C.F.R. § 1.36(b), filed August 24, 2009.

The request is **APPROVED**.

A grantable request to withdraw as attorney/agent of record must be signed by every attorney/agent seeking to withdraw or contain a clear indication that one attorney is signing on behalf of another/others. The Office requires the practitioner(s) requesting withdrawal to certify that he, she, or they have: (1) given reasonable notice to the client, prior to the expiration of the response period, that the practitioner(s) intends to withdraw from employment; (2) delivered to the client or a duly authorized representative of the client all papers and property (including funds) to which the client is entitled; and (3) notified the client of any responses that may be due and the time frame within which the client must respond, pursuant 37 CFR 10.40(c).

The request was signed by J. David Dainow on behalf of all attorneys of record. All attorneys/agents associated have been withdrawn. Applicant is reminded that there is no attorney of record at this time.

All future correspondence will be directed to the first named inventor David Groppe at the address indicated below.

There is an outstanding Office action mailed September 15, 2009 that requires a reply from the applicant.

Telephone inquiries concerning this decision should be directed to Michelle R. Eason at 571-272-4231.

Michelle R. Eason
Paralegal Specialist
Office of Petitions

cc: **DAVID GROPPE**
COMPOSITE SYSTEMS, INC.
1653 FOURTH STREET
P.O. BOX 509
ARNOLD, CA 95223

UNITED STATES PATENT AND TRADEMARK OFFICE

Commissioner for Patents
United States Patent and Trademark Office
P.O. Box 1450
Alexandria, VA 22313-1450
www.uspto.gov

COPY MAILED

JAN 05 2009

OFFICE OF PETITIONS

A LAW FIRM, P.C.
8753 YATES DRIVE
SUITE 215
WESTMINSTER CO 80031

In re Application of

SING, Albert et al.
Application No. 11/800,594
Filed: May 05, 2007
Attorney Docket No. **132-1-0001-Y**

DECISION ON PETITION TO WITHDRAW FROM RECORD

This is a decision on the Request to Withdraw as attorney or agent of record under 37 C.F.R. § 1.36(b), filed December 09, 2008.

The request is **APPROVED**.

A grantable request to withdraw as attorney/agent of record must be signed by every attorney/agent seeking to withdraw or contain a clear indication that one attorney is signing on behalf of another/others. The Office requires the practitioner(s) requesting withdrawal to certify that he, she, or they have: (1) given reasonable notice to the client, prior to the expiration of the response period, that the practitioner(s) intends to withdraw from employment; (2) delivered to the client or a duly authorized representative of the client all papers and property (including funds) to which the client is entitled; and (3) notified the client of any responses that may be due and the time frame within which the client must respond, pursuant 37 CFR 10.40(c).

The request was signed by Aileen Law on behalf of all attorneys of record who are associated with customer No. 65104. All attorneys/agents associated with the Customer Number 65104 have been withdrawn. Applicant is reminded that there is no attorney of record at this time.

All future correspondence will be directed to the first named inventor Albert Sing at the address indicated below. There is an outstanding Office action mailed December 11, 2008 that requires a reply from the applicant.

Telephone inquiries concerning this decision should be directed to Tredelle Jackson at 571-272-2783.

Tredelle D. Jackson
Paralegal Specialist
Office of Petitions

cc: **ALBERT SING, JR. AND MARIENE PLACENSIA**
3648 S. NORFOLK WAY
AURORA CO 80013

UNITED STATES PATENT AND TRADEMARK OFFICE

Commissioner for Patents
United States Patent and Trademark Office
P.O. Box 1450
Alexandria, VA 22313-1450
www.uspto.gov

RAY ALDEN
808 LAKE BRANDON TRAIL
RALEIGH NC 27610

COPY MAILED

JUN 0 4 2009

OFFICE OF PETITIONS

In re Application of	:	
Ray M. Alden	:	
Application No. 11/800,612	:	ON PETITION
Filed: May 7, 2007	:	
Title: Automobile Flag with Wind Powered Illumination of Integral Indicia	:	

This is a decision on the petition to withdraw the holding of abandonment under 37 CFR 1.181, filed May 18, 2009.

The petition under 37 CFR 1.181 is **DISMISSED**.

Any request for reconsideration of this decision must be submitted within **TWO (2) MONTHS** from the mail date of this decision. The reconsideration request should include a cover letter entitled "Renewed Petition under 37 CFR 1.181". Extensions of time under 37 CFR 1.136(a) are permitted. No fee is required for a renewed petition.

The above-identified application became abandoned for failure to timely file a response to the final Office action, mailed October 28, 2008. This Office action set a statutory period for reply of three (3) months. No extensions of time under 37 CFR 1.136(a) were obtained. No reply having been received, the application became abandoned on January 29, 2009. A Notice of Abandonment was mailed on May 13, 2009.

Petitioner contends that he did timely file an Amendment on December 18, 2008 to facsimile number (571) 273-7768. However, that is not the number to which official correspondence should be sent. As set forth in MPEP 502.01, "[e]ffective December 1, 2003, all patent application related correspondence transmitted by facsimile must be directed to the central facsimile number, with a few exceptions below. The central facsimile number is (571) 273-8300. Replies to Office actions including after-final amendments that are transmitted by facsimile must be directed to the central facsimile number." Accordingly, as petitioner has not shown that he submitted a reply to the proper number, the petition must be dismissed.

While the showing of record is not sufficient to withdraw the holding of abandonment, petitioner is not precluded from obtaining relief by filing a petition pursuant to 37 CFR 1.137(b) on the basis of unintentional delay. A grantable petition pursuant to 37 CFR 1.137(b) must be accompanied by (1) The reply required to the outstanding Office action or notice, unless previously filed; (2) The petition fee as set forth in 37 CFR 1.17(m), currently $810 for a small entity; and (3) A statement that the entire delay in filing the required reply from the due date for the reply until the filing of a grantable petition pursuant to this paragraph was unintentional.

Further correspondence with respect to this matter should be addressed as follows:

By mail: Mail Stop Petitions
Commissioner for Patents
P.O. Box 1450
Alexandria VA 22313-1450

By FAX: (571) 273-8300
Attn: Office of Petitions

Telephone inquiries related to this decision should be directed to the undersigned at (571)272-3207.

Cliff Congo
Petitions Attorney
Office of Petitions

Enc: PTO/SB/64 (3 pages)

UNITED STATES PATENT AND TRADEMARK OFFICE

Commissioner for Patents
United States Patent and Trademark Office
P.O. Box 1450
Alexandria, VA 22313-1450
www.uspto.gov

RAY ALDEN
808 LAKE BRANDON TRAIL
RALEIGH NC 27610

MAILED

NOV 18 2009

OFFICE OF PETITIONS

In re Application of :
Ray M. Alden :
Application No. 11/800,612 : ON PETITION
Filed: May 7, 2007 :
Title: Automobile Flag with Wind :
Powered Illumination of Integral
Indicia

This is a decision on the petition to revive under 37 CFR 1.137(b), filed June 8, 2009.

The petition under 37 CFR 1.137(b) is **DISMISSED**.

Any request for reconsideration of this decision must be submitted within **TWO (2) MONTHS** from the mail date of this decision. Extensions of time under 37 CFR 1.136(a) are permitted. The reconsideration request should include a cover letter entitled, "Renewed Petition under 37 CFR 1.137(b)". No further petition fee is required for a renewed petition.

The above-identified application became abandoned for failure to timely file a response to the final Office action, mailed October 28, 2008. This Office action set a statutory period for reply of three (3) months. No extensions of time under 37 CFR 1.136(a) were obtained. No reply having been received, the application became abandoned on January 29, 2009. A Notice of Abandonment was mailed on May 13, 2009. Applicant filed a petition to withdraw the holding of abandonment on May 18, 2009. However, the petition was dismissed in a decision mailed on June 4, 2009.

A grantable petition pursuant to 37 CFR 1.137(b) must be accompanied by (1) The reply required to the outstanding Office action or notice, unless previously filed; (2) The petition fee as set forth in 37 CFR 1.17(m) - currently $750 for a small entity; (3) A statement that the entire delay in filing the required reply from the due date for the reply until the filing of a grantable petition pursuant to this paragraph was unintentional. The Commissioner may require additional information where there is a question whether the delay was unintentional; and (4) Any terminal disclaimer (and fee as set forth in 37 CFR 1.20(d)) required pursuant to paragraph (d) of this section.

The instant petition has not satisfied requirement (1). Applicant has not submitted a proper reply to the October 28, 2008 final Office action. A proper response to a final office action consists of either: (1) an amendment that *prima facie* (i.e. on its face) places the application in condition for allowance; (2) a Notice of Appeal (and the required fee); (3) a Request for Continued Examination (and the required fee), or (4) a continuing application. Here, the Examiner has determined that the amendment does not place the application in condition for allowance.

Accordingly, on renewed petition, applicant must submit either a Notice of Appeal, Request for Continued Examination, or a continuing application.

Further correspondence with respect to this matter should be addressed as follows:

By mail: Mail Stop Petitions
Commissioner for Patents
PO Box 1450
Alexandria VA 22313-1450

By FAX: 571-273-8300
Attn: Office of Petitions

Telephone inquiries related to this decision should be directed to the undersigned at (571)272-3207.

Cliff Congo
Petitions Attorney
Office of Petitions

UNITED STATES PATENT AND TRADEMARK OFFICE

Commissioner for Patents
United States Patent and Trademark Office
P.O. Box 1450
Alexandria, VA 22313-1450
www.uspto.gov

RAY ALDEN
808 LAKE BRANDON TRAIL
RALEIGH NC 27610

MAILED

JAN 27 2010

OFFICE OF PETITIONS

In re Application of Ray M. Alden Application No. 11/800,612 Filed: May 7, 2007 Title: Automobile Flag with Wind Powered Illumination of Integral Indicia	: : : : :	ON PETITION

This is a decision on the petition to revive under 37 CFR 1.137(b), filed December 23, 2009.

The petition under 37 CFR 1.137(b) is **GRANTED**.

The above-identified application became abandoned for failure to timely file a response to the final Office action, mailed October 28, 2008. This Office action set a statutory period for reply of three (3) months. No extensions of time under 37 CFR 1.136(a) were obtained. No reply having been received, the application became abandoned on January 29, 2009. A Notice of Abandonment was mailed on May 13, 2009. Applicant filed a petition to withdraw the holding of abandonment on May 18, 2009. However, the petition was dismissed in a decision mailed on June 4, 2009. Applicant filed a renewed petition on June 8, 2009, which was again dismissed in a decision mailed on November 18, 2009.

With the instant petition, applicant made the proper statement of unintentional delay and submitted the required reply in the form of an RCE. The petition fee was previously paid.

The application is being forwarded to Group Art Unit 3611 for consideration of the RCE, filed December 23, 2009.

Telephone inquiries related to this decision should be directed to the undersigned at (571)272-3207.

Cliff Congo
Petitions Attorney
Office of Petitions

UNITED STATES PATENT AND TRADEMARK OFFICE

UNITED STATES DEPARTMENT OF COMMERCE
United States Patent and Trademark Office
Address: COMMISSIONER FOR PATENTS
P.O. Box 1450
Alexandria, Virginia 22313-1450
www.uspto.gov

SHUMAKER & SIEFFERT, P. A.
1625 RADIO DRIVE
SUITE 300
WOODBURY, MN 55125

Mail Date: 06/02/2010

Applicant	: Carl D. Wahlstrand	: DECISION ON REQUEST FOR
Patent Number	: 7664552	: RECALCULATION of PATENT
Issue Date	: 02/16/2010	: TERM ADJUSTMENT IN VIEW
Application No	: 11/800,640	: OF WYETH AND NOTICE OF INTENT TO
Filed	: 05/07/2007	: ISSUE CERTIFICATE OF CORRECTION
		:

The Request for Recalculation is **GRANTED** to the extent indicated.

The patent term adjustment has been determined to be **275** days. The USPTO will *sua sponte* issue a certificate of correction reflecting the amount of PTA days determined by the recalculation.

Prior to the issuance of the certificate of correction, the USPTO will afford patentee an opportunity to be heard and request reconsideration. Accordingly, patentee has **one month or thirty (30) days**, whichever is longer, to file a request for reconsideration of this patent term adjustment calculation. See 35 U.S.C. 154(b)(3)(B)(ii) and 37 CFR 1.322(a)(4). No extensions of time will be granted under 37 CFR 1.136.

Patentee should use document code PET.OP if electronically filing a request for reconsideration of this patent term adjustment calculation. The patentee must also include the information required by 37 CFR 1.705(b)(2) and the fee required by 37 CFR 1.18(e). If patentee does not file a timely request for reconsideration of this patent term adjustment calculation including the information required by 37 CFR 1.705(b)(2) and the fee required by 37 CFR 1.18(e), the USPTO will issue a certificate of correction reflecting the PTA determination noted above.

Patentee should be aware that in order to preserve the right to review in the United States District Court for the District of Columbia of the USPTO patent term adjustment determination, patentee must ensure that he or she also take the steps required under 35 U.S.C. 154(b)(4)(A) in a timely manner. Nothing in the request for recalculation should be construed as providing an alternative time frame for commencing a civil action under 35 U.S.C. 154(b)(4)(A).

Any questions concerning this decision should be directed to the Office of Patent Legal Administration at 571-272-7702.

UNITED STATES PATENT
AND TRADEMARK OFFICE

Commissioner for Patents
United States Patent and Trademark Office
P.O. Box 1450
Alexandria, VA 22313-1450
www.uspto.g

Date Mailed: February 23, 2010
Patent No. :7,553,357
Ser. No. :11/800659
Issued : June 30, 2009
Inventor(s) : Jean –Louis, et al.
Title :INK COMPOSITIN, INK CARTRIDGE, RECORDING METHOD, AND RECORDED PRODUCT

Request for Certificate of Correction

Consideration has been given your request for the issuance of a certificate of correction for the above-identified patent under the provisions of Rule(s) 1.322 and/or 1.323.

Assignees' names and addresses (assignment data, attorney agent/firm) printed in a patent, are based *solely* on information supplied in the appropriate space for identifying the assignment data, i.e., item 3 of the Issue Fee Transmittal Form PTOL-85B. Granting of a request under 37 CFR 3.81(b) is required to correct applicant's error providing ***incorrect or erroneous*** assignment data, *before* issuance of a Certificate of Correction, under 37 CFR 1.323 *(see Manual of Patent Examining Procedures (M.P.E.P) Chp.1400, sect. 1481).* This procedure is required *at any time after the issue fee is paid*, including after issuance of the patent.

In view of the foregoing, your request in this matter is hereby denied.
A certificate of correction will issue for the remaining errors noted in your request.

A request to correct the Assignee under 37 CFR 3.81(b) should include:

A. **the processing fee set forth in 37 CFR 1.17(h) (currently $130);**
B. a statement that the failure to include the correct assignee name on the PTOL-85B was inadvertent; and
C. a copy of the Notice of Recordation of Assignment Document, reflecting the reel and frame number where the assignment(s) is recorded and/or reflecting proof of *the date* the assignment was submitted for recordation.

In the Request, Applicant(s) may request that the file be forwarded to Certificates of Correction Branch, for issuance of a Certificate of Correction, if the Request is granted.

Any request under 37 CFR 3.81(b) should be directed to the following address or facsimile number:

By mail: Mail Stop PETITIONS
Commissioner for Patents
Post Office Box 1450
Alexandria, VA 22313-1450

By hand: Customer Service Window
Mail Stop Petitions
Randolph Building
40l Dulany Street
Alexandria, VA 22314

By fax: (571) 273-0025
ATTN: Office of Petitions

If a fee (currently $100) was previously submitted for consideration of a Request for Certificate of Correction, under CFR 1.323, to correct assignment data, no additional fee is required.

Magdalene Talley
For Mary F. Diggs, Supervisor
Decisions & Certificates
of Correction Branch
(571) 272-0423

Raymond A. DiPerns
C/o Ladas & Parry LLP
26 West 61st Street
New York, NY 10023

MD/mt

UNITED STATES PATENT AND TRADEMARK OFFICE

UNITED STATES DEPARTMENT OF COMMERCE
United States Patent and Trademark Office
Address: COMMISSIONER FOR PATENTS
P.O. Box 1450
Alexandria, Virginia 22313-1450
www.uspto.gov

CROMPTON, SEAGER & TUFTE, LLC
1221 NICOLLET AVENUE
SUITE 800
MINNEAPOLIS, MN 55403-2420

Mail Date: 04/21/2010

Applicant	: Regis Le Couedic	: DECISION ON REQUEST FOR
Patent Number	: 7666228	: RECALCULATION of PATENT
Issue Date	: 02/23/2010	: TERM ADJUSTMENT IN VIEW
Appliction No	: 11/800,676	: OF WYETH
Filed	: 05/07/2007	:
		:

The Patentee's Request for Recalculation is **DISMISSED.**

This Request is deemed ineligible for consideration for one or more of the following reasons:

(A). The patent for which PTA recalculation is requested is either a design or reissue application or is a reexamination proceeding;

(B). The patent for which PTA recalculation is requested resulted from a utility or plant application filed under 35 USC 111(a) before May 29, 2000 and no CPA filed in the application on/after May 29, 2000;

(C). The patent for which PTA recalculation is requested resulted from an international application in which the international filing date was before May 29, 2000 and no CPA filed in the application on/after May 29, 2000;

(D). The patent for which PTA recalculation is requested issued on/after March 2, 2010;

(E). The Request for Recalculation was filed more than 180 days after the grant date of the patent and the request was not filed within two months of a dismissal of a request for reconsideration of the of the patent term under 37 CFR 1.705(d);

(F). The Request for Recalculation is not solely limited to USPTO pre-Wyeth interpretation of 35 U.S.C. 154(b)(2)(A);

or

(G). A civil action was filed pursuant to 35 U.S.C. 154(b)(4)(A)concerning the same patent at issue in this request.

Patentee may file a reply to this decision dismissing the Request for Recalculation. Patentee must file such reply within one month or thirty days, whichever is longer, of the mail date of the decision dismissing the Request for Recalculation. No fee is required if patentee is asserting in the reply that the dismissal for ineligibility is improper.

Patentee should use document code PET.OP if electronically filing a reply to this dismissal. If the USPTO finds that the request was improperly deemed ineligible, the USPTO will mail applicant a recalculation determination.

Patentee should be aware that in order to preserve the right to review in the United States District Court for the District of Columbia of the USPTO patent term adjustment determination, patentee must ensure that he or she also take the steps required under 35 U.S.C. 154(b)(4)(A). Nothing in the request for recalculation should be construed as providing an alternative time frame for commencing a civil action under 35 U.S.C. 154 (b)(4)(A).

Any questions concerning this decision should be directed to the Office of Patent Legal Administration at 571-272-7702.

UNITED STATES PATENT AND TRADEMARK OFFICE

Commissioner for Patents
United States Patent and Trademark Office
P.O. Box 1450
Alexandria, VA 22313-1450
www.uspto.gov

Bor Z. Jang
9436 Parkside Drive
Centerville OH 45458

MAILED

JUN 16 2010

OFFICE OF PETITIONS

In re Application of	:	
Zhamu et al.	:	
Application No. 11/800730	:	ON PETITION
Filing or 371(c) Date: 05/08/2	:	
Title of Invention: METHOD OF	:	
PRODUCING EXFOLIATED	:	
GRAPHITE COMPOSITE	:	
COMPOSITIONS FOR FUEL CELL	:	
FLOW FIELD PLATES	:	

This is a decision on the Petition to Revive an Unintentionally Abandoned Application Under 37 C.F.R. § 1.137(b), filed March 11, 2010.

This Petition is hereby **granted**.

The above-identified application became abandoned for failure to timely and properly reply to the final Office action, mailed August 17, 2009. The Office action set a three (3) month period for reply. Extensions of time were available under 37 CFR 1.136(a). No timely and proper reply having been filed, the application became abandoned November 18, 2009. A Notice of Abandonment was mailed May 21, 2010.

Applicant files the present petition and Notice of Appeal and fee.

Accordingly, the petition is granted.

The application file does not indicate a change of address has been filed in this case, although the address given on the petition differs from the address of record. A change of address should be filed in this case in accordance with MPEP 601.03. A courtesy copy of this decision is being mailed to the address noted on the petition. However, until otherwise instructed, all future correspondence regarding this application will be mailed solely to the address of record.

It is also noted that Applicant filed a three (3) month extension of time with the petition. Applicant is advised that an extension of time is only available to extend the period to reply to an Office action during the extendable period. Once the reply period, including the maximum

extendable period, has lapsed, the application becomes abandoned (as of the day after the reply was due). No extensions of time are available. A refund of the extension of time fee has been credited to applicant's deposit account.

The application is being referred to Technology Center Art Unit 1791 to await the brief in support of appeal.

Applicant has two (2) months from the mailing date of this Decision to file an appeal brief. Extensions of time are available under 37 CFR 1.136(a). Accord, MPEP 1215.01

Telephone inquiries concerning this decision should be directed to the undersigned at (571) 272-3232.

/Derek L. Woods/

Derek L. Woods
Attorney
Office of Petitions

CC: MARK P. LEVY
P.O. BOX 8801
DAYTON, OH 45401-8801

UNITED STATES PATENT AND TRADEMARK OFFICE

Commissioner for Patents
United States Patent and Trademark Office
P.O. Box 1450
Alexandria, VA 22313-1450
www.uspto.gov

WEISS & MOY PC
4204 NORTH BROWN AVENUE
SCOTTSDALE AZ 85251

COPY MAILED
AUG 05 2008

In re Application of	:	
Bruce W. HELLER	:	
Application No. 11/800,759	:	DECISION ON PETITION
Filed: May 08, 2007	:	
Attorney Docket No. 4520P3203	:	

This is a decision on the petition under the unintentional provisions of 37 CFR 1.137(b), filed June 18, 2008, to revive the above-identified application.

The petition is **GRANTED**.

The above-identified application became abandoned for failure to reply in a timely manner to the Notice to File Missing Parts of Nonprovisional Application mailed June 01, 2007. The Notice set a period for reply of two (2) months from the mail date of the Notice. No extensions of time under the provisions of 37 CFR 1.136(a) were obtained. Accordingly, the application became abandoned on August 02, 2007.

The petition satisfies the conditions for revival pursuant to the provisions of 37 CFR 1.137(b) in that (1) the reply in the form of a preliminary amendment and replacement drawings; (2) the petition fee of $770.00; and (3) the required statement of unintentional delay have been received. Accordingly, the reply to the Notice to File Missing Parts of Nonprovisional Application of June 01, 2007 is accepted as having been unintentionally delayed.

Telephone inquiries concerning this decision should be directed to Michelle R. Eason at (571) 272-4231.

The application is being referred to the Office of Patent Application Processing.

Michelle R. Eason
Paralegal Specialist
Office of Petitions

UNITED STATES PATENT
AND TRADEMARK OFFICE

Commissioner for Patents
United States Patent and Trademark Office
P.O. Box 1450
Alexandria, VA 22313-1450
www.uspto.g

Date Mailed: January 2, 2008
Patent No. :PP196421 P2
Ser. No. :11/800767
Inventor(s) :Yasuhiro Takahata, et al.
Title :IPOMOEAPLANT NAMED 'KYUIKUKAN 3'

Request for Certificate of Correction

Consideration has been given your request for the issuance of a certificate of correction for the above-identified patent under the provisions of Rule(s) 1.322 and/or 1.323.

Assignees' names and addresses (assignment data) printed in a patent, are based *solely* on information supplied in the appropriate space for identifying the assignment data, i.e., item 3 of the Issue Fee Transmittal Form PTOL-85B. Granting of a request under 37 CFR 3.81(b) is required to correct applicant's error providing ***incorrect or erroneous*** assignment data, *before* issuance of a Certificate of Correction, under 37 CFR 1.323 *(see Manual of Patent Examining Procedures (M.P.E.P) Chp.1400, sect. 1481).* This procedure is required *at any time after the issue fee is paid*, including after issuance of the patent.

In view of the foregoing, your request is hereby denied.

A request to correct the Assignee under 37 CFR 3.81(b) should include:

A. **the processing fee set forth in 37 CFR 1.117(h) (currently $130);**
B. a statement that the failure to include the correct assignee name on the PTOL-85B was inadvertent; and
C. a copy of the Notice of Recordation of Assignment Document, reflecting the reel and frame number where the assignment(s) is recorded and/or reflecting proof of *the date* the assignment was submitted for recordation.

In the Request, Applicant(s) may request that the file be forwarded to Certificates of Correction Branch, for issuance of a Certificate of Correction, if the Request is granted.

Any request under 37 CFR 3.81(b) should be directed to the following address or facsimile number:

By mail: Mail Stop PETITIONS
Commissioner for Patents
Post Office Box 1450
Alexandria, VA 22313-1450

By hand: Customer Service Window
Mail Stop Petitions
Randolph Building
401 Dulany Street
Alexandria, VA 22314

By fax: (571) 273-0025
ATTN: Office of Petitions

If a fee (currently $100) was previously submitted for consideration of a Request for Certificate of Correction, under CFR 1.323, to correct assignment data, no additional fee is required.

Magdalene Talley
For Mary F. Diggs, Supervisor
Decisions & Certificates
of Correction Branch
(703) 308-9390 ext. 116

Catherine Anne Whealy
P.O. Box 161939
Fort Worth, TX 761939

MD/mt

UNITED STATES PATENT AND TRADEMARK OFFICE

UNITED STATES DEPARTMENT OF COMMERCE
United States Patent and Trademark Office
Address: COMMISSIONER FOR PATENTS
P.O. Box 1450
Alexandria, Virginia 22313-1450
www.uspto.gov

COLLARD & ROE, P.C.
1077 NORTHERN BOULEVARD
ROSLYN, NY 11576

Mail Date: 04/21/2010

Applicant	: Dag Behammer	: DECISION ON REQUEST FOR
Patent Number	: 7618851	: RECALCULATION of PATENT
Issue Date	: 11/17/2009	: TERM ADJUSTMENT IN VIEW
Appliction No	: 11/800,769	: OF WYETH AND NOTICE OF INTENT TO
Filed	: 05/07/2007	: ISSUE CERTIFICATE OF CORRECTION
		:

The Request for Recalculation is **GRANTED** to the extent indicated.

The patent term adjustment has been determined to be **400** days. The USPTO will *sua sponte* issue a certificate of correction reflecting the amount of PTA days determined by the recalculation.

Prior to the issuance of the certificate of correction, the USPTO will afford patentee an opportunity to be heard and request reconsideration. Accordingly, patentee has **one month or thirty (30) days**, whichever is longer, to file a request for reconsideration of this patent term adjustment calculation. See 35 U.S.C. 154(b)(3)(B)(ii) and 37 CFR 1.322(a)(4). No extensions of time will be granted under 37 CFR 1.136.

Patentee should use document code PET.OP if electronically filing a request for reconsideration of this patent term adjustment calculation. The patentee must also include the information required by 37 CFR 1.705(b)(2) and the fee required by 37 CFR 1.18(e). If patentee does not file a timely request for reconsideration of this patent term adjustment calculation including the information required by 37 CFR 1.705(b)(2) and the fee required by 37 CFR 1.18(e), the USPTO will issue a certificate of correction reflecting the PTA determination noted above.

Patentee should be aware that in order to preserve the right to review in the United States District Court for the District of Columbia of the USPTO patent term adjustment determination, patentee must ensure that he or she also take the steps required under 35 U.S.C. 154(b)(4)(A) in a timely manner. Nothing in the request for recalculation should be construed as providing an alternative time frame for commencing a civil action under 35 U.S.C. 154(b)(4)(A).

Any questions concerning this decision should be directed to the Office of Patent Legal Administration at 571-272-7702.

UNITED STATES PATENT AND TRADEMARK OFFICE

1-5-09

Commissioner for Patents
United States Patent and Trademark Office
P.O. Box 1450
Alexandria, VA 22313-1450
www.uspto.gov

Patent No. : PP19,448
Ser. No. :11/800,772
Inventor(s) :Takahata, Yasuhiro, et. al.
Issued : November 11, 2008
Title : IPOMOEA PLANT NAMED 'Kyuikukan 2
Docket No. : N/A

Re: Request for Certificate of Correction

Consideration has been given your request for the issuance of a certificate of correction for the above-identified patent under the provisions of Rule(s) 1.322.

Assignees' names and addresses (assignment data) printed in a patent, are based *solely* on information supplied in the appropriate space for identifying the assignment data, i.e., item 3 of the Issue Fee Transmittal Form PTOL-85B. Granting of a request under 37 CFR 3.81(b) is required to correct applicant's error providing ***incorrect or erroneous*** assignment data, *before* issuance of a Certificate of Correction, under 37 CFR 1.323 *(see Manual of Patent Examining Procedures (M.P.E.P) Chp.1400, sect. 1481).* This procedure is required *at any time after the issue fee is paid*, including after issuance of the patent.

In view of the foregoing, your request is hereby denied.

A request to correct the Assignee under 37 CFR 3.81(b) should include:

A. **the processing fee set forth in 37 CFR 1.117(h) (currently $130);**
B. a statement that the failure to include the correct assignee name on the PTOL-85B was inadvertent; and
C. a copy of the Notice of Recordation of Assignment Document, reflecting the reel and frame number where the assignment(s) is recorded and/or reflecting proof of *the date* the assignment was submitted for recordation.

In the Request, Applicant(s) may request that the file be forwarded to Certificates of Correction Branch, for issuance of a Certificate of Correction, if the Request is granted.

Any request under 37 CFR 3.81(b) should be directed to the following address or facsimile number:

By mail: Mail Stop PETITIONS
Commissioner for Patents
Post Office Box 1450
Alexandria, VA 22313-1450

By hand: Customer Service Window
Mail Stop Petitions
Randolph Building
401 Dulany Street
Alexandria, VA 22314

By fax: (703) 872-9306
ATTN: Office of Petitions

If a fee (currently $100) was previously submitted for consideration of a Request for Certificate of Correction, under CFR 1.323, to correct assignment data, , no additional fee is required.

Eva James
For Mary Diggs
Decisions & Certificates
of Correction Branch
(703) **308-9390 ext. 124** or 125

Catherine Anne Whealy
P.O. Box 16139
Fort Worth, TX 7616-1939

ej

UNITED STATES PATENT
AND TRADEMARK OFFICE

Commissioner for Patents
United States Patent and Trademark Office
P.O. Box 1450
Alexandria, VA 22313-1450
www.uspto.g

Date Mailed: January 14, 2008
Patent No. :PP19165
Ser. No. :11/800782
Inventor(s) : Yasuhiro Takahata, et al.
Title :IPOMOEAPLANT NAMED 'KYUIKUKAN 4'

Request for Certificate of Correction

Consideration has been given your request for the issuance of a certificate of correction for the above-identified patent under the provisions of Rule(s) 1.322 and/or 1.323.

Assignees' names and addresses (assignment data) printed in a patent, are based *solely* on information supplied in the appropriate space for identifying the assignment data, i.e., item 3 of the Issue Fee Transmittal Form PTOL-85B. Granting of a request under 37 CFR 3.81(b) is required to correct applicant's error providing ***incorrect or erroneous*** assignment data, *before* issuance of a Certificate of Correction, under 37 CFR 1.323 *(see Manual of Patent Examining Procedures (M.P.E.P) Chp.1400, sect. 1481).* This procedure is required *at any time after the issue fee is paid*, including after issuance of the patent.

In view of the foregoing, your request is hereby denied.

A request to correct the Assignee under 37 CFR 3.81(b) should include:

A. **the processing fee set forth in 37 CFR 1.117(h) (currently $130);**
B. a statement that the failure to include the correct assignee name on the PTOL-85B was inadvertent; and
C. a copy of the Notice of Recordation of Assignment Document, reflecting the reel and frame number where the assignment(s) is recorded and/or reflecting proof of *the date* the assignment was submitted for recordation.

In the Request, Applicant(s) may request that the file be forwarded to Certificates of Correction Branch, for issuance of a Certificate of Correction, if the Request is granted.

Any request under 37 CFR 3.81(b) should be directed to the following address or facsimile number:

By mail: Mail Stop PETITIONS
Commissioner for Patents
Post Office Box 1450
Alexandria, VA 22313-1450

By hand: Customer Service Window
Mail Stop Petitions
Randolph Building
401 Dulany Street
Alexandria, VA 22314

By fax: (571) 273-0025
ATTN: Office of Petitions

If a fee (currently $100) was previously submitted for consideration of a Request for Certificate of Correction, under CFR 1.323, to correct assignment data, no additional fee is required.

Magdalene Talley
For Mary F. Diggs, Supervisor
Decisions & Certificates
of Correction Branch
(703) 308-9390 ext. 116

Catherine Anne Whealy
P.O. Box 220
Fort Worth, TX 76476

MD/mt

UNITED STATES PATENT AND TRADEMARK OFFICE

Commissioner for Patents
United States Patent and Trademark Office
P.O. Box 1450
Alexandria, VA 22313-1450
www.uspto.gov

COPY MAILED

NOV 23 2009

OFFICE OF PETITIONS

Floyd B. Carothers
CAROTHERS AND CAROTHERS
Suite 200
445 Fort Pitt Blvd.
Pittsburgh, PA 15219

In re Application of	:	
Dario Dante Castelli	:	
Application No. 11/800,790	:	DECISION ON PETITION
Filed: May 7, 2007	:	TO WITHDRAW
Attorney Docket No. 4445	:	FROM RECORD
	:	

This is a decision on the Request to Withdraw as attorney or agent of record under 37 C.F.R. § 1.36(b), filed October 1, 2009.

The request is **APPROVED**.

A grantable request to withdraw as attorney/agent of record must be signed by every attorney/agent seeking to withdraw or contain a clear indication that one attorney is signing on behalf of another/others. A request to withdraw will not be approved unless at least 30 (thirty) days would remain between the date of approval and the later of the expiration date of a time to file a response or the expiration date of the maximum time period which can be extended under 37 C.F.R. § 1.136(a).

The request was signed by Floyd B. Carrothers on behalf of all attorneys of record. All attorneys/agents have been withdrawn. Applicant is reminded that there is no attorney of record at this time.

All future correspondence will be directed to the first named inventor Dario Dante Castelli at the address indicated below.

There is an outstanding Office action mailed August 5, 2009 that requires a reply from the applicant.

Telephone inquiries concerning this decision should be directed to Terri Johnson at 571-272-2991.

Terri Johnson
Petitions Examiner
Office of Petitions

cc: **Dario Dante Castelli**
26 Woodland Drive
Pittsburgh, PA 15228-1714

UNITED STATES PATENT AND TRADEMARK OFFICE

UNITED STATES DEPARTMENT OF COMMERCE
United States Patent and Trademark Office
Address: COMMISSIONER FOR PATENTS
P.O. Box 1450
Alexandria, Virginia 22313-1450
www.uspto.gov

APPLICATION NUMBER	FILING OR 371(C) DATE	FIRST NAMED APPLICANT	ATTY. DOCKET NO./TITLE
11/800,790	05/07/2007	Dario Dante Castelli	4445

CONFIRMATION NO. 9989

POWER OF ATTORNEY NOTICE

OC000000038919066

Floyd B. Carothers
CAROTHERS AND CAROTHERS
Suite 200
445 Fort Pitt Blvd.
Pittsburgh, PA 15219

Date Mailed: 11/23/2009

NOTICE REGARDING CHANGE OF POWER OF ATTORNEY

This is in response to the Power of Attorney filed 10/01/2009.

- The withdrawal as attorney in this application has been accepted. Future correspondence will be mailed to the new address of record. 37 CFR 1.33.

/tsjohnson/

Office of Data Management, Application Assistance Unit (571) 272-4000, or (571) 272-4200, or 1-888-786-0101

UNITED STATES PATENT AND TRADEMARK OFFICE

Commissioner for Patents
United States Patent and Trademark Office
P.O. Box 1450
Alexandria, VA 22313-1450
www.uspto.gov

KENYON & KENYON LLP
ONE BROADWAY
NEW YORK, NY 10004

COPY MAILED

JAN 29 2010

In re Application of	:	
Stephen Robert Tennison, et al.	:	
Application No. 11/800,805	:	DECISION GRANTING PETITION
Filed: May 7, 2007	:	UNDER 37 CFR 1.313(c)(2)
Attorney Docket No. 13101/49505	:	

This is a decision on the petition under 37 CFR 1.313(c)(2), filed January 29, 2010, to withdraw the above-identified application from issue after payment of the issue fee.

The petition is **GRANTED**.

The above-identified application is withdrawn from issue for consideration of a submission under 37 CFR 1.114 (request for continued examination). *See* 37 CFR 1.313(c)(2).

Petitioner is advised that the issue fee paid on December 3, 2009 cannot be refunded. If, however, this application is again allowed, petitioner may request that it be applied towards the issue fee required by the new Notice of Allowance.[1]

Telephone inquiries regarding this decision should be directed to undersigned at (571) 272-1642. All other inquiries concerning the examination or status of this application should be directed to the Technology Center.

This application is being referred to Technology Center AU 1793 for processing of the request for continued examination under 37 CFR 1.114 and for consideration of the concurrently filed information disclosure statement.

/AMW/
April M. Wise
Petitions Examiner
Office of Petitions

---

[1] *The request to apply the issue fee to the new Notice may be satisfied by completing and returning the new Part B – Fee(s) Transmittal Form (along with any balance due at the time of submission). Petitioner is advised that the Issue Fee Transmittal Form must be completed and timely submitted to avoid abandonment of the application.*

UNITED STATES PATENT AND TRADEMARK OFFICE

Commissioner for Patents
United States Patent and Trademark Office
P.O. Box 1450
Alexandria, VA 22313-1450
www.uspto.gov

KIRSCHSTEIN, OTTINGER, ISRAEL
& SCHIFFMILLER, P.C.
425 FIFTH AVENUE
5TH FLOOR
NEW YORK NY 10016-2223

COPY MAILED

JUN 04 2008

OFFICE OF PETITIONS

In re Application of :
Ishida, et al. :
Application No. 11/800,820 : ON PETITION
Filed: May 8, 2007 :
Attorney Docket No. Horizon-44 US/Minori :
For: SHEET FOLDING APPARATUS

This is a decision on the correspondence filed August 6, 2007 requesting, in effect, withdrawal of the Notice of Omitted Item(s) in a Nonprovisional Application (Notice), mailed June 5, 2007. The petition will be treated under 37 CFR 182.

The petition under 37 CFR 1.182 is **dismissed**.

The application was filed on May 8, 2007. However, on June 5, 2007, the Office of Initial Patent Examination mailed a Notice stating that the application had been accorded a filing date of May 8, 2007, and advising applicants that Figure 5B described in the specification appeared to have been omitted.

In response, the present petition was filed.

The petition does not allege and is not accompanied by any evidence that any sheets of drawings containing the label "Fig. 5B" was present in the Office on May 8, 2007. While the Brief Description of the Drawings lists Figures 5A and 5B, the pertinent drawing figures in the application file are labeled "Fig. 5". It is apparent that petitioner referred to the drawings in an inconsistent manner in the Brief Description of the Drawings and in the drawing figures.

Therefore, the "Notice" mailed June 5, 2007, was correct in advising applicant that Figure 5B appeared to have been omitted. The "Notice" was properly mailed and will not be withdrawn. The petition fee is required, since the petition was not necessary to correct any PTO error.

To avoid further delay in the examination of the application, a letter to the draftsman correcting the labeling of the drawing figures should be filed prior to the first Office action.

The application is being returned to the Office of Patent Application Processing for further pre-examination processing with the presently accorded filing date of May 8, 2007. Figure 5B submitted with the instant petition will not be processed at this time.

Telephone inquiries concerning this decision should be directed to the undersigned at (571) 272-3230.

Shirene Willis Brantley

Shirene Willis Brantley
Senior Petitions Attorney
Office of Petitions

UNITED STATES PATENT AND TRADEMARK OFFICE

Commissioner for Patents
United States Patent and Trademark Office
P.O. Box 1450
Alexandria, VA 22313-1450
www.uspto.gov

JOSEPH HEI
5437 CENTRAL AVENUE
SUITE 10
NEWARK, CA 94560

MAILED

MAY 13 2010

OFFICE OF PETITIONS

In re Application of
Joseph Hei, et al.
Application No. 11/800,901
Filed: March 22, 2010
Attorney Docket No.

DECISION ON PETITION

This is a decision on the petition under the unintentional provisions of 37 CFR 1.137(b), filed March 22, 2010, to revive the above-identified application.

There is no indication that the person signing the instant petition was ever given a power of attorney or authorization of agent to prosecute the above-identified application. In accordance with 37 CFR 1.34(a), the signature appearing on the petition shall constitute a representation to the United States Patent and Trademark Office that he/she is authorized to represent the particular party in whose behalf he/she acts. However, if petitioner desires to receive future correspondence regarding this application, the appropriate power of attorney or authorization of agent must be submitted. All future correspondence regarding this application file will be directed solely to the address of record until otherwise instructed.

It is not apparent whether the statement of unintentional delay was signed by a person who would have been in a position of knowing that the entire delay in filing the required reply from the due date for the reply until the filing of a grantable petition pursuant to 37 CFR 1.137(b) was unintentional. Nevertheless, in accordance with 37 CFR 10.18, the statement is accepted as constituting a certification of unintentional delay. However, in the event that petitioner has no knowledge that the delay was unintentional, petitioner must make such an inquiry to ascertain that, in fact, the delay was unintentional. If petitioner discovers that the delay was intentional, petitioner must so notify the Office.

The application became abandoned for failure to reply in a timely manner to the non-final Office action mailed, December 13, 2007, which set a shortened statutory period for reply of three (3) months. No extensions of time under the provisions of 37 CFR 1.136(a) were obtained. Accordingly, the application became abandoned on March 14, 2009

The petition satisfies the requirements of 37 CFR 1.137(b) in that petitioner has supplied (1) the reply in the form of an amendment, (2) the petition fee of $810, and (3) a proper statement of unintentional delay.

In view of the above, the petition is **GRANTED**.

The application file does not indicate a change of address has been filed in this case, although the address given on the petition differs from the address of record. A change of address should be filed in this case in accordance with MPEP 601.03. A courtesy copy of this decision is being mailed to the address noted on the petition. However, until otherwise instructed, all future correspondence regarding this application will be mailed solely to the address of record.

Telephone inquiries concerning this decision should be directed to undersigned at (571) 272-1642. All other inquiries concerning the examination or status of this application should be directed to the Technology Center.

This application is being referred to Technology Center AU 3636 for appropriate action by the Examiner in the normal course of business on the reply received March 22, 2010.

April M. Wise
Petitions Examiner
Office of Petitions

cc: CHRISTOPHER B. EIDE
MORRISON & FOERSTER, LLP
755 PAGE MILL ROAD
PALO ALTO, CA 94304-1018

UNITED STATES PATENT AND TRADEMARK OFFICE

UNITED STATES DEPARTMENT OF COMMERCE
United States Patent and Trademark Office
Address: COMMISSIONER FOR PATENTS
P.O. Box 1450
Alexandria, Virginia 22313-1450
www.uspto.gov

FISH & RICHARDSON P.C.
P.O. BOX 1022
MINNEAPOLIS, MN 55440-1022

Mail Date: 04/20/2010

Applicant	: Alexander Kaplan	: DECISION ON REQUEST FOR
Patent Number	: 7615508	: RECALCULATION of PATENT
Issue Date	: 11/10/2009	: TERM ADJUSTMENT IN VIEW
Appliction No	: 11/800,934	: OF WYETH AND NOTICE OF INTENT TO
Filed	: 05/08/2007	: ISSUE CERTIFICATE OF CORRECTION
		:

The Request for Recalculation is **GRANTED** to the extent indicated.

The patent term adjustment has been determined to be **25** days. The USPTO will *sua sponte* issue a certificate of correction reflecting the amount of PTA days determined by the recalculation.

Prior to the issuance of the certificate of correction, the USPTO will afford patentee an opportunity to be heard and request reconsideration. Accordingly, patentee has **one month or thirty (30) days**, whichever is longer, to file a request for reconsideration of this patent term adjustment calculation. See 35 U.S.C. 154(b)(3)(B)(ii) and 37 CFR 1.322(a)(4). No extensions of time will be granted under 37 CFR 1.136.

Patentee should use document code PET.OP if electronically filing a request for reconsideration of this patent term adjustment calculation. The patentee must also include the information required by 37 CFR 1.705(b)(2) and the fee required by 37 CFR 1.18(e). If patentee does not file a timely request for reconsideration of this patent term adjustment calculation including the information required by 37 CFR 1.705(b)(2) and the fee required by 37 CFR 1.18(e), the USPTO will issue a certificate of correction reflecting the PTA determination noted above.

Patentee should be aware that in order to preserve the right to review in the United States District Court for the District of Columbia of the USPTO patent term adjustment determination, patentee must ensure that he or she also take the steps required under 35 U.S.C. 154(b)(4)(A) in a timely manner. Nothing in the request for recalculation should be construed as providing an alternative time frame for commencing a civil action under 35 U.S.C. 154(b)(4)(A).

Any questions concerning this decision should be directed to the Office of Patent Legal Administration at 571-272-7702.

UNITED STATES PATENT AND TRADEMARK OFFICE

Commissioner for Patents
United States Patent and Trademark Office
P.O. Box 1450
Alexandria, VA 22313-1450
www.uspto.gov

RICHARD ARON OSMAN
4070 CALLE ISABELLA
SAN CLEMENTE, CA 92672

COPY MAILED

MAY 22 2008

OFFICE OF PETITIONS

In re Application of	:	
JONES, Levi	:	
Application No. 11/800,944	:	DECISION ON PETITION
Filed: May 8, 2007	:	TO MAKE SPECIAL UNDER
Attorney Docket No. **JOLZ5001CES**	:	37 CFR 1.102(c)(1)
	:	

This is a decision on the petition under 37 CFR 1.102(c)(1), filed April 21, 2008 to make the above-identified application special based on applicant's age as set forth in M.P.E.P. § 708.02, Section IV.

The petition is **GRANTED.**

A grantable petition to make an application special under 37 CFR 1.102(c)(1) and MPEP § 708.02, Section IV: Applicant's Age must be accompanied by evidence showing that at least one of the applicants is 65 years of age, or more, such as a birth certificate or a statement by applicant. No fee is required

The instant petition includes the certification by registered attorney Charles E. Smith attesting to the age of inventor Levi Jones. Accordingly, the above-identified application has been accorded "special" status.

Inquiries concerning either the examination or status of the application should be directed to the Technology Center at 571-272-3700.

Telephone inquiries concerning this decision should be directed to the undersigned at 571-272-7253.

The application is being forwarded to the Technology Center Art Unit 3764 for action on the merits commensurate with this decision.

MaGraves

Monica A. Graves
Petitions Examiner
Office of Petitions

SPE RESPONSE FOR CERTIFICATE OF CORRECTION

Paper No.: _____

DATE : **7/24/09**

TO SPE OF : ART UNIT **2821 (2800)**

SUBJECT : Request for Certificate of Correction for Appl. No.: **11/800,949** Patent No.: **7,528,789**

Attn: Huedung Mancuso

Please respond to this request for a certificate of correction within 7 days.

FOR IFW FILES:

Please review the requested changes/corrections as shown in the **COCIN** document(s) in the IFW application image. No new matter should be introduced, nor should the scope or meaning of the claims be changed.

Please complete the response (see below) and forward the completed response to scanning using document code **COCX**.

FOR PAPER FILES:

Please review the requested changes/corrections as shown in the attached certificate of correction. Please complete this form (see below) and forward it with the file to:

Certificates of Correction Branch (C of C)
South Tower - 9A22
Palm Location 7580

***Claims**

Ernest C. White, LIE
Certificates of Correction Branch
703-308-9390 ext.122

Thank You For Your Assistance

The request for issuing the above-identified correction(s) is hereby:
Note your decision on the appropriate box.

☒ **Approved**	**All** changes apply.
☐ **Approved in Part**	Specify below which changes **do not** apply.
☐ **Denied**	State the reasons for denial below.

Comments: _____

Douglas W. Owens — **SPE**

2821 — **Art Unit**

UNITED STATES PATENT AND TRADEMARK OFFICE

UNITED STATES DEPARTMENT OF COMMERCE
United States Patent and Trademark Office
Address: COMMISSIONER FOR PATENTS
P.O. Box 1450
Alexandria, Virginia 22313-1450
www.uspto.gov

DORITY & MANNING, P.A.
POST OFFICE BOX 1449
GREENVILLE, SC 29602-1449

Mail Date: 04/21/2010

Applicant	: Branko N. Popov	: DECISION ON REQUEST FOR
Patent Number	: 7618915	: RECALCULATION of PATENT
Issue Date	: 11/17/2009	: TERM ADJUSTMENT IN VIEW
Appliction No	: 11/800,978	: OF WYETH AND NOTICE OF INTENT TO
Filed	: 05/08/2007	: ISSUE CERTIFICATE OF CORRECTION
		:

The Request for Recalculation is **GRANTED** to the extent indicated.

The patent term adjustment has been determined to be **239** days. The USPTO will *sua sponte* issue a certificate of correction reflecting the amount of PTA days determined by the recalculation.

Prior to the issuance of the certificate of correction, the USPTO will afford patentee an opportunity to be heard and request reconsideration. Accordingly, patentee has **one month or thirty (30) days**, whichever is longer, to file a request for reconsideration of this patent term adjustment calculation. See 35 U.S.C. 154(b)(3)(B)(ii) and 37 CFR 1.322(a)(4). No extensions of time will be granted under 37 CFR 1.136.

Patentee should use document code PET.OP if electronically filing a request for reconsideration of this patent term adjustment calculation. The patentee must also include the information required by 37 CFR 1.705(b)(2) and the fee required by 37 CFR 1.18(e). If patentee does not file a timely request for reconsideration of this patent term adjustment calculation including the information required by 37 CFR 1.705(b)(2) and the fee required by 37 CFR 1.18(e), the USPTO will issue a certificate of correction reflecting the PTA determination noted above.

Patentee should be aware that in order to preserve the right to review in the United States District Court for the District of Columbia of the USPTO patent term adjustment determination, patentee must ensure that he or she also take the steps required under 35 U.S.C. 154(b)(4)(A) in a timely manner. Nothing in the request for recalculation should be construed as providing an alternative time frame for commencing a civil action under 35 U.S.C. 154(b)(4)(A).

Any questions concerning this decision should be directed to the Office of Patent Legal Administration at 571-272-7702.

UNITED STATES PATENT AND TRADEMARK OFFICE

Commissioner for Patents
United States Patent and Trademark Office
P.O. Box 1450
Alexandria, VA 22313-1450
www.uspto.gov

COPY MAILED

MAR 3 1 2009

OFFICE OF PETITIONS

FSP LLC
P.O. BOX 890
VANCOUVER, WA 98666

In re Application of Serra et al. :
Application No. 11/801,003 : Decision on Petition
Filing Date: May 7, 2007 :
Attorney Docket No. FSP0389 :

This is a decision on the petition under 37 CFR 1.137(b), filed December 10, 2008, to revive the above-identified application.

The petition is **granted**.

The above-identified application became abandoned for failure to submit the issue fee and publication fee in a timely manner in reply to the Notice of Allowance mailed August 1, 2008, which set a statutory period for reply of three (3) months. Accordingly, the above-identified application became abandoned on Tuesday, November 4, 2008. A Notice of Abandonment was mailed on November 24, 2008.

The instant petition requests revival of the application.

A grantable petition under 37 CFR 1.137(b) must be accompanied by:

(1) the reply required to the outstanding Office action or notice, unless previously filed,
(2) the petition fee,
(3) a statement that the entire delay in filing the required reply from the due date for the reply until the filing of a grantable petition pursuant to 37 CFR 1.137(b) was unintentional, and
(4) a terminal disclaimer and fee if the application was filed on or before June 8, 1995 or if the application is a design application.

Petitioner has submitted the issue fee, publication fee, and petition fee. Petitioner has stated the entire delay in filing the required reply from the due date for the reply until the filing of a grantable petition pursuant to 37 CFR 1.137(b) was unintentional.

Petitioner has met the requirements to revive the above-identified application pursuant to 37 CFR 1.137(b). Therefore, the petition is granted and the application is revived.

The Office of Data Management, Patent Publication Branch, will be informed of the instant decision and the application will be issued as a patent in due course.

Telephone inquiries regarding this communication should be directed to Petitions Attorney Steven Brantley at (571) 272-3203.

Charles Steven Brantley
Senior Petitions Attorney
Office of Petitions

UNITED STATES PATENT AND TRADEMARK OFFICE

Commissioner for Patents
United States Patent and Trademark Office
P.O. Box 1450
Alexandria, VA 22313-1450
www.uspto.gov

STRAUB & POKOTYLO
788 SHREWSBURY AVENUE
TINTON FALLS, NJ 07724

MAILED

MAR 25 2009

OFFICE OF PETITIONS

In re Application of :
Osamu Nonaka, et al :
Application No. 11/801,033 :
Filed: May 8, 2007 :
Attorney Docket No. OOCL-376 :

DECISION GRANTING PETITION

This is a decision on the petition filed January 22, 2009, requesting that the above-identified application be accorded a filing date of May 8, 2007, instead of the presently accorded date of May 9, 2007.

Petitioners request the earlier filing date on the basis that the application was purportedly deposited with the U. S. Postal Service (USPS) as Express Mail on May 8, 2007. In support, petitioners provide a copy of the Express Mail label, No. EM 057388888 US, the same Express Mail receipt number referred to in the transmittal letter found in the file. It is noted that, while the "date in" on the copy of the Express Mail label includes a hand written date of "05 09 07", it also includes a USPS receipt stamp dated May 8, 2007. A copy of the USPS Track/Confirm record for Express Mail Label No. EM 057388888 US was also provided which corroborates acceptance of the "Express Mail" package in question by the USPS Eatontown NJ 07799 on May 8, 2007.

In view of the above, the evidence is convincing that the Express Mail package was entrusted to the USPS on May 8, 2007 and that this application is entitled to a filing date of May 8, 2007.

The petition is **GRANTED**. No petition fee has been charged, nor is one due.

The application is being referred to the Office of Patent Application Processing (OPAP) to correct the filing date to **May 8, 2007** and issue a corrected filing receipt.

Telephone inquires related to this decision should be directed to the undersigned at (571) 272-3204. Telephone inquiries related to OPAP processing should be directed to their hotline at (571) 272-4000.

Sherry D. Brinkley
Petitions Examiner
Office of Petitions

UNITED STATES PATENT AND TRADEMARK OFFICE

Commissioner for Patents
United States Patent and Trademark Office
P.O. Box 1450
Alexandria, VA 22313-1450
www.uspto.gov

RONALD M. GOLDMAN
21535 HAWTHORNE BLVD.
SUITE 500
TORRANCE, CA 90503

COPY MAILED

OCT 1 5 2008

OFFICE OF PETITIONS

In re Application of	:	
Moshe Begim	:	
Application No. 11/801,051	:	DECISION ON PETITION
Filed: May 7, 2007	:	TO WITHDRAW
Attorney Docket No. 11406	:	FROM RECORD
	:	

This is a decision on the Request to Withdraw as attorney or agent under 37 C.F.R. § 1.36(b) or 37 C.F.R. § 10.40 filed March 4, 2008.

The request is **APPROVED**.

A review of the file record indicates that Ronald M. Goldman: (1) does not have power of attorney in this patent application; and (2) has been employed or otherwise engaged in the proceedings in this patent application. In view of the present decision, Ronald M. Goldman has been withdrawn from the present application and may not prepare or submit papers under 37 C.F.R. § 1.34, or correspond in any manner in this application unless appointed in an acceptable power of attorney under 37 C.F.R. § 1.32(b).

The request to change the correspondence of record is not acceptable as the requested correspondence address is not that of: (1) the first named signing inventor; or (2) the intervening assignee of the entire interest. All future communications from the Office will be directed to the first named signing inventor at the first copied address below until otherwise properly notified by the applicant.

In order to request or take action in a patent matter, the assignee must establish its ownership of the patent to the satisfaction of the Director. In this regard, a Statement under 37 CFR 3.73(b) must have either: (i) documentary evidence of a chain of title from the original owner to the assignee (*e.g.*, copy of an executed assignment), and a statement affirming that the documentary evidence of the chain of title from the original owner to the assignee was or concurrently is being submitted for recordation pursuant to § 3.11; or (ii) a statement specifying where documentary evidence of a chain of title from the original owner to the assignee is recorded in the assignment records of the Office (*e.g.*, reel and frame number).

Applicant is reminded that there is no attorney of record at this time.

There are no pending Office actions at the present time.

Telephone inquires concerning this decision should be directed to undersigned at 571-272-1642.

/April M. Wise/
April M. Wise
Petitions Examiner
Office of Petitions

cc: MR. MOSHE BEGIM
PRESIDENT
AVC CORPORATION
2550 S. DENKER AVENUE
TORRANCE, CA 90501

UNITED STATES PATENT AND TRADEMARK OFFICE

UNITED STATES DEPARTMENT OF COMMERCE
United States Patent and Trademark Office
Address: COMMISSIONER FOR PATENTS
P.O. Box 1450
Alexandria, Virginia 22313-1450
www.uspto.gov

APPLICATION NUMBER	FILING OR 371(C) DATE	FIRST NAMED APPLICANT	ATTY. DOCKET NO./TITLE
11/801,051	05/07/2007	Moshe Begim	11406

CONFIRMATION NO. 1564

POWER OF ATTORNEY NOTICE

OC000000032558944

2604
RONALD M. GOLDMAN
21535 HAWTHORNE BLVD.
SUITE 500
TORRANCE, CA 90503

Date Mailed: 10/10/2008

NOTICE REGARDING CHANGE OF POWER OF ATTORNEY

This is in response to the Power of Attorney filed 03/04/2008.

- The withdrawal as attorney in this application has been accepted. Future correspondence will be mailed to the new address of record. 37 CFR 1.33.

/amwise/

Office of Data Management, Application Assistance Unit (571) 272-4000, or (571) 272-4200, or 1-888-786-0101

UNITED STATES PATENT AND TRADEMARK OFFICE

UNITED STATES DEPARTMENT OF COMMERCE
United States Patent and Trademark Office
Address: COMMISSIONER FOR PATENTS
P.O. Box 1450
Alexandria, Virginia 22313-1450
www.uspto.gov

Woodard, Emhardt, Moriarty, McNett & Henry LLP
111 Monument Circle, Suite 3700
Indianapolis, IN 46204-5137

Mail Date: 05/20/2010

Applicant	: Brian Robert Law	: DECISION ON REQUEST FOR
Patent Number	: 7641077	: RECALCULATION of PATENT
Issue Date	: 01/05/2010	: TERM ADJUSTMENT IN VIEW
Application No	: 11/801,055	: OF WYETH AND NOTICE OF INTENT TO
Filed	: 05/08/2007	: ISSUE CERTIFICATE OF CORRECTION
		:

The Request for Recalculation is **GRANTED** to the extent indicated.

The patent term adjustment has been determined to be **266** days. The USPTO will *sua sponte* issue a certificate of correction reflecting the amount of PTA days determined by the recalculation.

Prior to the issuance of the certificate of correction, the USPTO will afford patentee an opportunity to be heard and request reconsideration. Accordingly, patentee has **one month or thirty (30) days**, whichever is longer, to file a request for reconsideration of this patent term adjustment calculation. See 35 U.S.C. 154(b)(3)(B)(ii) and 37 CFR 1.322(a)(4). No extensions of time will be granted under 37 CFR 1.136.

Patentee should use document code PET.OP if electronically filing a request for reconsideration of this patent term adjustment calculation. The patentee must also include the information required by 37 CFR 1.705(b)(2) and the fee required by 37 CFR 1.18(e). If patentee does not file a timely request for reconsideration of this patent term adjustment calculation including the information required by 37 CFR 1.705(b)(2) and the fee required by 37 CFR 1.18(e), the USPTO will issue a certificate of correction reflecting the PTA determination noted above.

Patentee should be aware that in order to preserve the right to review in the United States District Court for the District of Columbia of the USPTO patent term adjustment determination, patentee must ensure that he or she also take the steps required under 35 U.S.C. 154(b)(4)(A) in a timely manner. Nothing in the request for recalculation should be construed as providing an alternative time frame for commencing a civil action under 35 U.S.C. 154(b)(4)(A).

Any questions concerning this decision should be directed to the Office of Patent Legal Administration at 571-272-7702.

UNITED STATES PATENT AND TRADEMARK OFFICE

UNITED STATES DEPARTMENT OF COMMERCE
United States Patent and Trademark Office
Address: COMMISSIONER FOR PATENTS
P.O. Box 1450
Alexandria, Virginia 22313-1450
www.uspto.gov

BASF Performance Products LLC
Patent Department
540 White Plains Road
P.O. Box 2005
Tarrytown, NY 10591

Mail Date: 04/20/2010

Applicant	: Paolo Balliello	: DECISION ON REQUEST FOR
Patent Number	: 7608117	: RECALCULATION of PATENT
Issue Date	: 10/27/2009	: TERM ADJUSTMENT IN VIEW
Appliction No	: 11/801,066	: OF WYETH AND NOTICE OF INTENT TO
Filed	: 05/08/2007	: ISSUE CERTIFICATE OF CORRECTION
		:

The Request for Recalculation is **GRANTED** to the extent indicated.

The patent term adjustment has been determined to be **189** days. The USPTO will *sua sponte* issue a certificate of correction reflecting the amount of PTA days determined by the recalculation.

Prior to the issuance of the certificate of correction, the USPTO will afford patentee an opportunity to be heard and request reconsideration. Accordingly, patentee has **one month or thirty (30) days**, whichever is longer, to file a request for reconsideration of this patent term adjustment calculation. See 35 U.S.C. 154(b)(3)(B)(ii) and 37 CFR 1.322(a)(4). No extensions of time will be granted under 37 CFR 1.136.

Patentee should use document code PET.OP if electronically filing a request for reconsideration of this patent term adjustment calculation. The patentee must also include the information required by 37 CFR 1.705(b)(2) and the fee required by 37 CFR 1.18(e). If patentee does not file a timely request for reconsideration of this patent term adjustment calculation including the information required by 37 CFR 1.705(b)(2) and the fee required by 37 CFR 1.18(e), the USPTO will issue a certificate of correction reflecting the PTA determination noted above.

Patentee should be aware that in order to preserve the right to review in the United States District Court for the District of Columbia of the USPTO patent term adjustment determination, patentee must ensure that he or she also take the steps required under 35 U.S.C. 154(b)(4)(A) in a timely manner. Nothing in the request for recalculation should be construed as providing an alternative time frame for commencing a civil action under 35 U.S.C. 154(b)(4)(A).

Any questions concerning this decision should be directed to the Office of Patent Legal Administration at 571-272-7702.

UNITED STATES PATENT AND TRADEMARK OFFICE

UNITED STATES DEPARTMENT OF COMMERCE
United States Patent and Trademark Office
Address: COMMISSIONER FOR PATENTS
P.O. Box 1450
Alexandria, Virginia 22313-1450
www.uspto.gov

MORRISON & FOERSTER LLP
755 PAGE MILL RD
PALO ALTO, CA 94304-1018

Mail Date: 04/21/2010

Applicant	: Peter J. Wonfor	: DECISION ON REQUEST FOR
Patent Number	: 7620178	: RECALCULATION of PATENT
Issue Date	: 11/17/2009	: TERM ADJUSTMENT IN VIEW
Appliction No	: 11/801,099	: OF WYETH AND NOTICE OF INTENT TO
Filed	: 05/07/2007	: ISSUE CERTIFICATE OF CORRECTION
		:

The Request for Recalculation is **GRANTED** to the extent indicated.

The patent term adjustment has been determined to be **0** days. The USPTO will *sua sponte* issue a certificate of correction reflecting the amount of PTA days determined by the recalculation.

Prior to the issuance of the certificate of correction, the USPTO will afford patentee an opportunity to be heard and request reconsideration. Accordingly, patentee has **one month or thirty (30) days**, whichever is longer, to file a request for reconsideration of this patent term adjustment calculation. See 35 U.S.C. 154(b)(3)(B)(ii) and 37 CFR 1.322(a)(4). No extensions of time will be granted under 37 CFR 1.136.

Patentee should use document code PET.OP if electronically filing a request for reconsideration of this patent term adjustment calculation. The patentee must also include the information required by 37 CFR 1.705(b)(2) and the fee required by 37 CFR 1.18(e). If patentee does not file a timely request for reconsideration of this patent term adjustment calculation including the information required by 37 CFR 1.705(b)(2) and the fee required by 37 CFR 1.18(e), the USPTO will issue a certificate of correction reflecting the PTA determination noted above.

Patentee should be aware that in order to preserve the right to review in the United States District Court for the District of Columbia of the USPTO patent term adjustment determination, patentee must ensure that he or she also take the steps required under 35 U.S.C. 154(b)(4)(A) in a timely manner. Nothing in the request for recalculation should be construed as providing an alternative time frame for commencing a civil action under 35 U.S.C. 154(b)(4)(A).

Any questions concerning this decision should be directed to the Office of Patent Legal Administration at 571-272-7702.

UNITED STATES PATENT AND TRADEMARK OFFICE

UNITED STATES DEPARTMENT OF COMMERCE
United States Patent and Trademark Office
Address: COMMISSIONER FOR PATENTS
P.O. Box 1450
Alexandria, Virginia 22313-1450
www.uspto.gov

CALFEE HALTER & GRISWOLD, LLP
800 SUPERIOR AVENUE
SUITE 1400
CLEVELAND, OH 44114

Mail Date: 04/20/2010

Applicant	: Betty Lise Anderson	: DECISION ON REQUEST FOR
Patent Number	: 7630598	: RECALCULATION of PATENT
Issue Date	: 12/08/2009	: TERM ADJUSTMENT IN VIEW
Appliction No	: 11/801,105	: OF WYETH AND NOTICE OF INTENT TO
Filed	: 05/08/2007	: ISSUE CERTIFICATE OF CORRECTION
		:

The Request for Recalculation is **GRANTED** to the extent indicated.

The patent term adjustment has been determined to be **0** days. The USPTO will *sua sponte* issue a certificate of correction reflecting the amount of PTA days determined by the recalculation.

Prior to the issuance of the certificate of correction, the USPTO will afford patentee an opportunity to be heard and request reconsideration. Accordingly, patentee has **one month or thirty (30) days**, whichever is longer, to file a request for reconsideration of this patent term adjustment calculation. See 35 U.S.C. 154(b)(3)(B)(ii) and 37 CFR 1.322(a)(4). No extensions of time will be granted under 37 CFR 1.136.

Patentee should use document code PET.OP if electronically filing a request for reconsideration of this patent term adjustment calculation. The patentee must also include the information required by 37 CFR 1.705(b)(2) and the fee required by 37 CFR 1.18(e). If patentee does not file a timely request for reconsideration of this patent term adjustment calculation including the information required by 37 CFR 1.705(b)(2) and the fee required by 37 CFR 1.18(e), the USPTO will issue a certificate of correction reflecting the PTA determination noted above.

Patentee should be aware that in order to preserve the right to review in the United States District Court for the District of Columbia of the USPTO patent term adjustment determination, patentee must ensure that he or she also take the steps required under 35 U.S.C. 154(b)(4)(A) in a timely manner. Nothing in the request for recalculation should be construed as providing an alternative time frame for commencing a civil action under 35 U.S.C. 154(b)(4)(A).

Any questions concerning this decision should be directed to the Office of Patent Legal Administration at 571-272-7702.

UNITED STATES PATENT AND TRADEMARK OFFICE

Commissioner for Patents
United States Patent and Trademark Office
P.O. Box 1450
Alexandria, VA 22313-1450
www.uspto.gov

TSE-CHENG WANG
1 F. NO. 23 LANE 196 PEI HSIN ROAD
SECTION 2
HSIN TIEN, TAIPEI 231 TW TAIWAN

COPY MAILED

SEP 2 5 2008

OFFICE OF PETITIONS

In re Application of	:	
WANG, Tse-Cheng et al.	:	
Application No. 11/801,117	:	DECISION ON PETITION
Filed: May 09, 2007	:	TO MAKE SPECIAL UNDER
Attorney Docket No.	:	37 CFR 1.102(c)(1)
	:	

This is a decision on the petition under 37 CFR 1.102(c)(1), filed August 18, 2008, to make the above-identified application special based on applicant's age as set forth in M.P.E.P. § 708.02, Section IV.

The petition is **DISMISSED**.

A grantable petition to make an application special under 37 CFR 1.102(c)(1) and MPEP § 708.02, Section IV: Applicant's Age, must be accompanied by evidence showing that at least one of the applicants is 65 years of age, or more, such as a birth certificate or a statement by applicant. No fee is required.

The instant petition does not include evidence showing that the applicant is 65 years of age or more, such as a birth certificate or a statement signed by applicant attesting to his age.

Further correspondence with respect to this matter should be addressed as follows:

By Mail: Mail Stop PETITION
Commissioner for Patents
P. O. Box 1450
Alexandria, VA 22313-1450

By hand: U. S. Patent and Trademark Office
Customer Service Window, Mail Stop Petitions
Randolph Building
401 Dulany Street
Alexandria, VA 22314

By FAX: (571) 273-8300

Telephone inquiries concerning this decision should be directed to Tredelle Jackson at 571-272-2783.

All other inquiries concerning either the examination or status of the application should be directed to the Technology Center.

The application is being forwarded to the Technology Center Art Unit 3748 for action in its regular turn.

Tredelle D. Jackson
Paralegal Specialist
Office of Petitions

UNITED STATES PATENT AND TRADEMARK OFFICE

Commissioner for Patents
United States Patent and Trademark Office
P.O. Box 1450
Alexandria, VA 22313-1450
www.uspto.gov

TSE-CHENG WANG
1 F. NO. 23 LANE 196 PEI HSIN ROAD
SECTION 2
HSIN TIEN, TAIPEI 231 TW TAIWAN

COPY MAILED

NOV 0 7 2008

OFFICE OF PETITIONS

In re Application of	:	
WANG, Tse-Cheng et al.	:	
Application No. 11/801,117	:	DECISION ON PETITION
Filed: May 09, 2007	:	TO MAKE SPECIAL UNDER
Attorney Docket No.	:	37 CFR 1.102(c)(1)
	:	

This is a decision on the petition under 37 CFR 1.102(c)(1), filed October 22, 2008, to make the above-identified application special based on applicant's age as set forth in M.P.E.P. § 708.02, Section IV.

The petition is **DISMISSED**.

A grantable petition to make an application special under 37 CFR 1.102(c)(1) and MPEP § 708.02, Section IV: Applicant's Age, must be accompanied by evidence showing that at least one of the applicants is 65 years of age, or more, such as a birth certificate or a statement by applicant. No fee is required.

The instant petition does not include evidence showing that the applicant is 65 years of age or more, such as a birth certificate or a statement signed by applicant attesting to his age. The Household Certificate is submitted with the petition is not accepted.

Petitioner/applicant is cautioned to avoid submitting personal information in documents filed in a patent application that may contribute to identity theft. Personal information such as social security numbers, bank account numbers, or credit card numbers (other than a check or credit card authorization form PTO-2038 submitted for payment purposes) is never required by the USPTO to support a petition or an application. If this type of personal information is included in documents submitted to the USPTO, petitioners/applicants should consider redacting such personal information from the documents before submitting them to the USPTO. Petitioner/applicant is advised that the record of a patent application is available to the public after publication of the application (unless a non-publication request in compliance with 37 CFR 1.213(a) is made in the application) or issuance of a patent. Furthermore, the record from an abandoned application may also be available to the public if the application is referenced in a published application or an issued patent (see 37 CFR 1.14).

Further correspondence with respect to this matter should be addressed as follows:

By Mail: Mail Stop PETITION
Commissioner for Patents

Commissioner for Patents
P. O. Box 1450
Alexandria, VA 22313-1450

By hand: U. S. Patent and Trademark Office
Customer Service Window, Mail Stop Petitions
Randolph Building
401 Dulany Street
Alexandria, VA 22314

By FAX: (571) 273-8300

Telephone inquiries concerning this decision should be directed to Tredelle Jackson at 571-272-2783.

All other inquiries concerning either the examination or status of the application should be directed to the Technology Center.

The application is being forwarded to the Technology Center Art Unit 3748 for action in its regular turn.

Tredelle D. Jackson
Paralegal Specialist
Office of Petitions

UNITED STATES PATENT AND TRADEMARK OFFICE

COMMISSIONER FOR PATENTS
UNITED STATES PATENT AND TRADEMARK OFFICE
P.O. BOX 1450
ALEXANDRIA, VA 22313-1450
www.uspto.gov

COPY MAILED

JAN 16 2008

OFFICE OF PETITIONS

BRYAN K. WHEELOCK
SUITE 400
7700 BONHOMME
ST. LOUIS, MO 63105

In re Application of :
Jeffrey M. Garibaldi, et al. :
Application No. 11/801,123 : DECISION GRANTING PETITION
Filed: May 8, 2007 :
Atty Docket No. 5236-000785/US/COB :

This is a decision in response to the petition filed September 20, 2007, requesting that the above-identified application be accorded a filing date of May 8, 2007, instead of the presently accorded date of May 9, 2007.

Petitioner alleges that the application was deposited in "Express Mail" Service with the U. S. Postal Service (USPS) on May 8, 2007. In support, petitioners provide, *inter alia*, a copy of the "Express Mail" mailing label receipt No. EV 844119646 US, showing a "Date-In" of "05 08 07." It is noted that the label also includes a USPS stamp dated "May 8 2007". The same Express Mail receipt number appears on the application transmittal letter found in the file.

The Office considers the date the paper or fee is shown to have been deposited as "Express Mail" to be the "Date In" on the Express Mail label, MPEP 513. That is the date that verifies that the package was actually mailed. The evidence is convincing that the application was deposited as "Express Mail" with the USPS on May 8, 2007.

The petition is granted.

The application is being referred to the Office of Patent Application Processing (OPAP) for correction of the filing date to **May 8, 2007** and issuance of a corrected filing receipt.

Telephone inquires related to this decision should be directed to the undersigned at (571) 272-3204. Telephone inquiries related to OPAP processing should be directed to their hotline at (571) 272-4000.

Sherry D. Brinkley
Petitions Examiner
Office of Petitions

UNITED STATES PATENT AND TRADEMARK OFFICE

COMMISSIONER FOR PATENTS
UNITED STATES PATENT AND TRADEMARK OFFICE
WASHINGTON, DC 20231
www.uspto.gov

Banner Development, Inc.
P.O. Box 8859
Endwell, NY 13762

Art Unit 3765

12/10/09

In re Application of	:	
Sigmon et al.	:	
Serial No. 11/801,145	:	DECISION ON PETITION
Filed May 9, 2007	:	
For: FLAMEPROOF, HEAT RESISTANT,	:	
ONE-PIECE ESCAPE SUITE	:	

In the petition under 37 CFR 1.48(a) filed April 15, 2008, applicant request that R. Bruce Watson, Stephen J. Clock, Jr. and Joseph A. Silvinski be added as inventors of the above named invention. In order for the petition under 37 CFR 148(a) to be granted, the petition must be accompanied with the following:

(1) A request to correct the inventorship that sets forth the desired inventorship change;
(2) A statement from each person being added as an inventor and from each person being deleted as an inventor that the error in inventorship occurred without deceptive intention on his or her part;
(3) An oath or declaration by the actual inventor or inventors as required by § 1.63 or as permitted by §§ 1.42, 1.43 or § 1.47;
(4) The processing fee set forth in § 1.17(i); and
(5) If an assignment has been executed by any of the original named inventors, the written consent of the assignee (see § 3.73(b) of this chapter).

The petition is granted.

All requirements set forth in 37 CFR 1.48(a), as noted above, have been met by applicants' petition.

PETITION GRANTED

Gary L. Welch
Supervisory Patent Examiner
Art Unit 3765
(571) 272-4996
(571) 273-4996 fax

UNITED STATES PATENT AND TRADEMARK OFFICE

Commissioner for Patents
United States Patent and Trademark Office
P.O. Box 1450
Alexandria, VA 22313-1450
www.uspto.gov

COPY MAILED

OCT 14 2008

OFFICE OF PETITIONS

HEDMAN & COSTIGAN P.C.
1185 AVENUE OF THE AMERICAS
NEW YORK, NY 10036

In re Application of	:	
Giuseppe Aldinio Colbachini et al	:	
Application No. 11/801,149	:	ON PETITION
Filed: May 9, 2007	:	
Attorney Docket No. 1011-921	:	

This is a decision on the petition under 37 CFR 1.137(b), filed June 9, 2008, to revive the above-identified application.

The petition is **GRANTED**.

The above-identified application became abandoned for failure to reply in a timely manner to the non-final Office action mailed November 19, 2007, which set a shortened statutory period for reply of three (3) months. No extension of time under the provisions of 37 CFR 1.136(a) were obtained. Accordingly, the above-identified application became abandoned on February 20, 2008.

Telephone inquiries concerning this decision should be directed to Irvin Dingle at (571) 272-3210.

This matter is being referred to Technology Center AU 3754 for further processing.

Irvin Dingle
Petitions Examiner
Office of Petitions

UNITED STATES PATENT AND TRADEMARK OFFICE

Commissioner for Patents
United States Patent and Trademark Office
P.O. Box 1450
Alexandria, VA 22313-1450
www.uspto.gov

MAILED

MAY 11 2010

OFFICE OF PETITIONS

HEDMAN & COSTIGAN, P.C.
1230 AVENUE OF THE AMERICAS
7th floor
NEW YORK NY 10020

In re Patent No. 7,516,762	:	
Issue Date: April 14, 2009	:	
Application No. 11/801,149	:	DECISION ON PETITION
Filed: May 9, 2007	:	
Attorney Docket No. 1011-921	:	

This is a decision on the Request For Certificate Of Correction Under 37 CFR §1.323, filed January 8, 2010, to correct inventors's name and assignee's residence on the PTOL-85B. The Request is being treated as a Petition. A completed Certificate of Correction Form (PTO/SB/44) was also submitted on August 11, 2008.

The petition under 37 CFR 3.81 is **GRANTED**.

Petitioner urges that the present Petition was submitted to correct the error in the spelling of assignee's name and residence on the previously submitted PTOL-85b and that such correction were applicant's error, as well as PTO error. Accordingly, petitioner requests, in effect, that the Title Page of the above-identified patent be corrected, via issuance of a Certificate of Correction, to correct the inventor's name and assignee's residence identified thereon from:

"Giuseppe Aldin*io* Colbachini" and "Cervarese Santa Croc*a*, Padova, Italy"

to:

--Giuseppe Aldino Colbachini -- and – Cervarese Santa Croce (Padova) Italy --

37 CFR 3.81(b), effective June 25, 2004, reads:

> *After payment of the issue fee:* Any request for issuance of an application in the name of the assignee submitted after the date of payment of the issue fee, and any request for a patent to be corrected to state the name of the assignee, must state that the assignment was submitted for recordation as set forth in § 3.11 before issuance of the patent, and must include a request for a certificate of correction under § 1.323 of this chapter (accompanied by the fee set forth in § 1.20(a) and the processing fee set forth in § 1.17(i) of this chapter.

The requisite $100.00 fee (Fee Code 1811) as set forth under 37 CFR 1.20(a), and the requisite $130.00 processing fee (Fee Code 1464) as set forth under 37 CFR 1.17(i) were submitted. Further, Office assignment records are consistent with the requested correction. Accordingly, since the Petition complies with the provisions of 37 CFR 3.81(b), it is appropriate for the Office to issue a corrected Certificate of Correction in accordance with the content of the Form PTO/SB/44 that accompanied the present Petition.

The file does not indicate a change of address has been submitted, although the address given on the petition differs from the address of record. If appropriate, a change of address should be filed in accordance with MPEP 601.03. A courtesy copy of this decision is being mailed to the address given on the petition; however, the Office will mail all future correspondence solely to the address of record.

Inquiries related this communication should be directed to Cheryl Gibson-Baylor at (571)272-3213.

Any questions concerning the issuance of a Certificate of Correction should be directed to the Certificates of Correction Branch at (571) 272-4200.

This matter is being referred to the Certificates of Correction Branch for processing of a Certificate of Correction in U.S. Patent No. 7,516,762.

Brian W. Brown
Petitions Examiner
Office of Petitions

cc: Hedman & Costigan, P.C.
1185 Avenue of the Americas
New York, New York 10036

UNITED STATES PATENT AND TRADEMARK OFFICE

Commissioner for Patents
United States Patent and Trademark Office
P.O. Box 1450
Alexandria, VA 22313-1450
www.uspto.gov

ROHM AND HAAS ELECTRONIC MATERIALS
CMP HOLDINGS, INC.
451 BELLEVUE ROAD
NEWARK DE 19713

MAILED

JUL 19 2010

OFFICE OF PETITIONS

In re Application of	:	
Terence M. THOMAS et al.	:	
Application No. 11/801,151	:	DECISIO ON PETITION
Filed: May 08, 2007	:	
Attorney Docket No. 06025US	:	

This is a decision on the petition under the unintentional provisions of 37 CFR 1.137(b), filed June 23, 2010, to revive the above-identified application.

The petition is **GRANTED**.

The application became abandoned for failure to timely file a reply within the meaning of 37 CFR 1.113 to the final Office action of December 10, 2009. The proposed reply required for consideration of a petition to revive must be a Notice of Appeal (and appeal fee required by 37 CFR 41.20(b)(2), an amendment that *prima facie* places the application in condition for allowance, a Request for Continued Examination and submission (37 CFR 1.114), or the filing of a continuing application under 37 CFR 1.53(b). See MPEP 711.03(c)(III)(A)(2). A three month (3) extension of time pursuant to the provisions of 37 CFR 1.136(a) was obtained. Accordingly, the date of abandonment of this application is June 11, 2010.

The petition satisfies the requirements of 37 CFR 1.137(b) in that petitioner has supplied (1) the reply in the form of a Request for Continued Examination (RCE) and fee of $810.00, and the submission required by 37 CFR 1.114; (2) the petition fee of $1.620.00; and (3) a proper statement of unintentional delay. Accordingly, the reply to the final Office action of December 10, 2009 is accepted as having been unintentionally delayed.

Telephone inquiries concerning this decision should be directed to the undersigned at (571) 272-4231.

This application is being referred to Technology Center AU 1793 for processing of the RCE and for appropriate action by the Examiner in the normal course of business on the amendment submitted in accordance with 37 CFR 1.114.

Michelle R. Eason
Paralegal Specialist
Office of Petitions

UNITED STATES PATENT AND TRADEMARK OFFICE

Commissioner for Patents
United States Patent and Trademark Office
P.O. Box 1450
Alexandria, VA 22313-1450
www.uspto.gov

RIMAS LUKAS
Vertiflex, Inc.
1351 Calle Avanzado
San Clemente, CA 92673

MAILED

MAR 2 6 2010

OFFICE OF PETITIONS

In re Application of	:	
Moti Altarac, et al.	:	
Application No. 11/801,186	:	DECISION ON PETITION
Filed: May 9, 2007	:	TO WITHDRAW
Attorney Docket No. 65837-8010US	:	FROM RECORD
	:	

This is a decision on the Request to Withdraw as attorney or agent of record under 37 C.F.R. § 1.36(b), filed January 11, 2010.

The request is **NOT APPROVED** because it is moot.

A review of the file record indicates that the power of attorney to Rimas Lukas has been revoked by the assignee of the patent application on January 14, 2010. Accordingly, the request to withdraw under 37 C.F.R. § 1.36(b) is moot.

All future communications from the Office will continue to be directed to the below-listed address until otherwise notified by applicant.

Telephone inquires concerning this decision should be directed to Terri Johnson at 571-272-2991.

Terri Johnson
Petitions Examiner
Office of Petitions

cc: **Perkins Coie LLP**
Patent-Sea
P.O. Box 1247
Seattle, WA 98111-1247

UNITED STATES PATENT AND TRADEMARK OFFICE

Commissioner for Patents
United States Patent and Trademark Office
P.O. Box 1450
Alexandria, VA 22313-1450
www.uspto.gov

Horst M. Kasper
13 Forest Drive
Warren, NJ 07059

COPY MAILED
AUG 2 5 2008

In re Application of	:	
Dieter Mosemann, et. al.	:	
Application No. 11/801,188	:	ON PETITION
Filed: May 9, 2007	:	
Attorney Docket No. GSO203T1	:	

This is a decision on the petition under 37 CFR 1.137(b), filed March 28, 2008, to revive the above-identified application.

The application became abandoned for failure to respond to the Notice to File Corrected Application Papers mailed on June 6, 2007. A Notice of Abandonment was mailed on February 19, 2008.

The petition satisfies the requirements of 37 CFR 1.137(b) in that petitioner has supplied (1) the reply in the form of an abstract; (2) the petition fee of $770; and (3) a proper statement of unintentional delay. Therefore, the petition is **GRANTED**.

This application file is being referred to the Office of Patent Application Processing for further processing.

Telephone inquiries concerning this decision should be directed to the undersigned at (571) 272-3226.

Andrea Smith
Petitions Examiner
Office of Petitions

UNITED STATES PATENT AND TRADEMARK OFFICE

Commissioner for Patents
United States Patent and Trademark Office
P.O. Box 1450
Alexandria, VA 22313-1450
www.uspto.gov

HORST M. KASPER
13 FOREST DRIVE
WARREN, NJ 07059

COPY MAILED
SEP 25 2008

In re Application of	:	
Mosemann et al.	:	
Application No. 11/801,190	:	DECISION ON PETITION
Filed: May 9, 2007	:	
Attorney Docket No: GSO202T1	:	

This is a decision on the petition under the unintentional provisions of 37 CFR 1.137(b), filed April 25, 2008, to revive the above-identified application.

The petition is **GRANTED**.

The application became abandoned for failure to reply in a timely manner to the Notice to File Corrected Application Papers (Notice) mailed June 6, 2007. The Notice set a period for reply of two (2) months from the mail date of the Notice. No extensions of time under the provisions of 37 CFR 1.136(a) were obtained. Accordingly, the application became abandoned on August 7, 2007. A Notice of Abandonment was mailed February 19, 2008.

The petition satisfies the requirements of 37 CFR 1.137(b) in that petitioner has supplied (1) a Substitute Specification and Replacement drawings; (2) the petition fee of $770.00, and (3) a proper statement of unintentional delay.

Telephone inquiries concerning this decision should be directed to Joan Olszewski at (571) 272-7751.

This application is being referred to the Office of Patent Application Processing for further processing in accordance with this decision on petition.

/Liana Walsh/
Liana Walsh
Petition Examiner
Office of Petitions

UNITED STATES PATENT AND TRADEMARK OFFICE

Commissioner for Patents
United States Patent and Trademark Office
P.O. Box 1450
Alexandria, VA 22313-1450
www.uspto.gov

VERTIFLEX, INC.
PERKINS COIE LLP
P.O. BOX 1247
SEATTLE, WA 98111-1247

MAILED

APR 07 2010

OFFICE OF PETITIONS

In re Application of	:	
ALTARAC, Moti et al.	:	
Application No. 11/801,194	:	DECISION ON PETITION
Filed: May 09, 2007	:	TO WITHDRAW
Attorney Docket No. **65837-8009US**	:	FROM RECORD
	:	

This is a decision on the Request to Withdraw as attorney or agent of record under 37 C.F.R. § 1.36(b), filed January 11, 2010.

The request is **NOT APPROVED** because it is moot.

A review of the file record indicates that the power of attorney to VERTIFLEX, INC. PERKINS COIE LLP has been revoked by the assignee of the patent application on January 14, 2010. Accordingly, the request to withdraw under 37 C.F.R. § 1.36(b) is moot.

All future communications from the Office will continue to be directed to the below-listed address until otherwise notified by applicant.

Telephone inquires concerning this decision should be directed to Tredelle Jackson at 571-272-2783.

/Tredelle D. Jackson/
Petitions Examiner
Office of Petitions

cc: **PERKINS COIE LLP**
PATENT-SEA
P.O. BOX 1247
SEATTLE WA 98111-1247

UNITED STATES PATENT AND TRADEMARK OFFICE

Commissioner for Patents
United States Patent and Trademark Office
P.O. Box 1450
Alexandria, VA 22313-1450
www.uspto.gov

Date Mailed: June 2, 2008

HAVERSTOCK & OWENS LLP
162 N WOLFE ROAD
SUNNYVALE CA 94086

Applicant: Hong et al.
Appl. No.: 11/801,217
Filing Date: May 8, 2007
Title: SYSTEMS FOR AND METHODS OF CHARACTERIZING REACTIONS
Attorney Docket No.: AUB-06802
Pub. No.: US 2008/0004753 A1
Pub. Date: January 3, 2008

This is a decision on the request for republication of patent application publication under 37 CFR 1.221(a), filed on May 20, 2008, for the above-identified application.

The request under 37 CFR 1.221(a) is DISMISSED.

37 CFR 1.221(a) requires "a copy of the application in compliance with the Office electronic filing system requirements and be accompanied by the publication fee set forth in § 1.18(d) and the processing fee set forth in § 1.17(i)". If the request for republication does not comply with the electronic filing system requirements, the republication will not take place and the publication fee set forth in § 1.18(d) will be refunded. The processing fee will be retained.

The applicant did not supply a copy of the application in compliance with the Office electronic filing system, as required by 37 CFR 1.221(a) because **the Applicant submitted the papers as a "Document for an existing application", which are entered into the application file, and not as a "Pre-Grant Publication" submission**. The request for republication does not comply with the electronic filing system requirements, thus republication will not take place.

Any request for republication under 37 CFR 1.221(a), must be submitted via the EFS system, as a Pre-Grant publication submission.

Any questions or requests for reconsideration of the decision should be addressed as follows:

By mail to: Mail Stop PGPUB
Commissioner for Patents
P.O. Box 1450
Alexandria, Va. 22313-1450

By facsimile: 571-273-8300

Telephone inquiries regarding this correspondence should be directed to The Office of Data Management at 571-272-4200.

Tammy J. Koontz
Program & Management Analyst
Office of Data Management

```
Adjustment date: 06/02/2008  KKING1
05/20/2008 SSANDARA 00000002 11801217
01 FC:1504                        -300.00 OP


Refund Ref:
06/02/2008  KKING1    0000162970
----------------------------------------

     CHECK Refund Total:      $300.00
```

UNITED STATES PATENT AND TRADEMARK OFFICE

COMMISSIONER FOR PATENTS
UNITED STATES PATENT AND TRADEMARK OFFICE
P.O. BOX 1450
ALEXANDRIA, VA 22313-1450
www.uspto.gov

The Weintraub Group, P.L.C.
Suite 140
28580 Orchard Lake Road
Farmington Hills MI 48334

COPY MAILED

MAR 02 2009

OFFICE OF PETITIONS

In re Application of :
Bovee :
Application No. 11/801,225 : DECISION ON PETITION
Filed: May 9, 2007 :
Atty. Dkt. No.: BJO-100-A :

This is a decision on the petition under the unintentional provisions of 37 CFR 1.137(b), filed December 29, 2008, to revive the above-identified application.

The petition is **GRANTED**.

This application became abandoned November 5, 2008 for failure to timely pay the issue fee and publication fee, as required by the Notice of Allowance and Fee(s) Due mailed August 4, 2008. The Notice set a three month statutory period of time for reply. Notice of Abandonment was mailed December 3, 2008.

The petition satisfies the requirements of 37 CFR 1.137(b) in that petitioner has supplied (1) the reply in the form of payment of the issue fee and publication fee, (2) the required petition fee; and (3) a proper statement of unintentional delay.

Telephone inquiries concerning this decision should be directed to Petitions Attorney Alesia M. Brown at (571) 272-3205.

This application is being referred to the Office of Data Management for processing into a patent.

/ALESIA M. BROWN/
Alesia M. Brown
Petitions Attorney
Office of Petitions

UNITED STATES PATENT AND TRADEMARK OFFICE

Commissioner for Patents
United States Patent and Trademark Office
P.O. Box 1450
Alexandria, VA 22313-1450
www.uspto.gov

MAILED
FROM DIRECTOR'S OFFICE

JUL 13 2007

TECHNOLOGY CENTER 3600

MICHAEL A. GUTH
2-2905 EAST CLIFF DRIVE
SANTA CRUZ CA 95062

In re application of	:	**DECISION ON PETITION**
Joeben Bevirt	:	**TO MAKE SPECIAL FOR**
Application No. 11/801,234	:	**NEW APPLICATION**
Filed: May 9, 2007	:	**UNDER 37 CFR 1.102**
For: MOUNTING APPARATUS USING BALL AND SOCKET JOINTS WITH GRIPPING FEATURES		

This is a decision on the petition filed on May 9, 2007 to make the above-identified application special for accelerated examination procedure under 37 C.F.R. § 1.102(d).

The petition to make the application special is **DENIED**.

REGULATION AND PRACTICE

A grantable petition to make special under 37 C.F.R. § 1.102(d) and pursuant to the "Change to Practice for Petitions in Patent Applications to Make Special and for Accelerated Examination" published in the Federal Register on June 26, 2006 (71 Fed. Reg. 36323), must satisfy the following conditions:

I. Conditions Regarding the Application:

1. the application must be a non-reissue utility or design application filed under 37 CFR 1.111(a);

2. the application, the petition and the required fees must be filed electronically using the USPTO's electronic filing system (EFS), or EFS-web; if not filed electronically, a statement asserting that EFS and EFS-web were not available during the normal business hours.

3. at the time of filing, the application must be complete under 37 CFR 1.51 and in condition for examination;

4. the application must contain three or fewer independent claims and twenty or fewer total claims and the claims must be directed to a single invention.

II. Conditions Regarding the Petition:

The petition must:

1. be filed with the application;

2. include a statement that applicant agrees not to separately argue the patentability of any independent claim during any appeal in the application;

3. include a statement that applicant agrees to make an election without traverse in a telephone interview.

4. include a statement that applicant agrees to conduct such an interview when requested by the examiner.

5. include a statement, made based on a good faith belief, that a preexamination search in compliance with the following requirements, was conducted, including an identification of the field of search by United States class and subclass, where applicable, and for database searches, the search logic or chemical structure or sequence used as a query, the name of the file(s) searched and the database service, and the date of the search.

The preexamination search must:

5.1 involve U.S. patents and patent application publications, foreign patent documents, and non-patent literature, unless the applicant can justify with reasonable certainty that no references more pertinent than those already identified are likely to be found in the eliminated sources and includes such a justification with this statement;

5.2. be directed to the claimed invention and encompass all of the features of the claims, giving the claims the broadest reasonable expectation;

5.3. encompass the disclosed features that may be claimed.

6. must provide in support of the petition an accelerated examination support document.

An accelerated examination support document must include:

6.1. an information disclosure statement (IDS) in compliance with 37 CFR 1.98 citing each reference deemed most closely related to the subject matter of each of the claims;

6.2. an identification of all the limitations in the claims that are disclosed by the reference specifying where the limitation is disclosed in the cited reference;

6.3. a detailed explanation of how each of the claims are patentable over the references cited with particularity required by 37 CFR 1.111(b) and (c);

6.4. a concise statement of the utility of the invention as defined in each of the independent claims (unless the application is a design application);

6.5. a showing of where each limitation of the claims finds support under 35 USC 112, first paragraph, in the written description of the specification. If applicable, the showing must also identify: (1) each means- (or step) plus-function claim element that invokes consideration under 35 UDC 112, sixth paragraph; and (2) the structure, material, or acts in the specification that corresponds to each means- (or step) plus-function claim element that invokes consideration under 35 UDC 112, sixth paragraph; if the application claims the benefit of one or more applications under title 35, United States Code, the showing must also include where each limitation of the claims finds support under 35 USC 112, first paragraph, in each such application in which such supports exists;

6.6. an identification of any cited references that may be disqualified under 35 USC 103(c).

REVIEW OF FACTS

The petition fails to comply with conditions I.2 and II.2-II.2.6 above.

It appears that the petition was filed under the guidelines for making an application special that were in effect prior to August 25, 2006. As of August 25, 2006 the new guidelines (as set forth above) replaced the old guidelines.

Therefore, the petition fails to meet the required conditions to be accorded special status under the accelerated examination procedure. Given the above failure of not filing the petition electronically, which cannot now be remedied, the petition has not been further reviewed on the merits.

DECISION

For the above-stated reasons, the petition is **DENIED**. The application will therefore be taken up by the examiner for action in its regular turn. Further petitions for accelerated examination in this application will not be entertained.

Any inquiry regarding this decision should be directed to Kenneth J. Dorner, Quality Assurance Specialist, at (571) 272-6587.

Kenneth J. Dorner

Kenneth J. Dorner
Quality Assurance Specialist
Technology Center 3600

Kjd: 7/11/07

UNITED STATES PATENT AND TRADEMARK OFFICE

Commissioner for Patents
United States Patent and Trademark Office
P.O. Box 1450
Alexandria, VA 22313-1450
www.uspto.gov

BRACEWELL & GIULIANI LLP
P.O. BOX 61389
HOUSTON TX 77208-1389

COPY MAILED

JUN 04 2008

OFFICE OF PETITIONS

In re Application of	:
Tibbitts, Galloway, Vuyk, H. Curlett, Padgett,	: DECISION ON PETITION UNDER
S. Curlett, and Harder	: 37 CFR 1.48
Application No. 11/801,268	: DECISION REFUSING STATUS
Filed: May 9, 2007	: UNDER 37 CFR 1.47(a) AND
Attorney Docket No. 66015.105086	: DECISION ON PETITION UNDER
For: IMPACT EXCAVATION SYSTEM AND METHOD	: PETITION UNDER 37 CFR 1.137(b)
WITH PARTICLE SEPARATION	

This is a decision on the petitions under 37 CFR 1.48, 37 CFR 1.47(a), and 37 CFR 1.137(b) all filed May 12, 2008.

The petition under 37 CFR 1.48 is **dismissed.**

The petition under 37 CFR 1.47(a) is **dismissed.**

The petition under 37 CFR 1.137(b) is also **dismissed.**

Any request for reconsideration under this decision must be submitted within TWO (2) MONTHS from the mail date of this decision. Extensions of time under 37 CFR 1.136(a) are permitted. Failure to respond will result in the abandonment of this application. Any response should be titled "Request for Reconsideration of Petitions Under 37 CFR 1.47(a) and 37 CFR 1.137(b) .

The above-identified application was filed on May 9, 2007, without an executed oath or declaration. Accordingly, a "Notice to File Missing Parts Nonprovisional Application" (the "Notice") was mailed on June 1, 2007, requiring an executed oath or declaration and a surcharge for the late filing of the oath or declaration. The Notice allowed an extendable period for response of two months from its mailing date. A response was not received within the allowable period and the application became abandoned on August 2, 2007. A Notice of Abandonment was mailed February 12, 2008. The instant petitions were filed on May 12, 2008.

TREATMENT UNDER 37 CFR 1.48

The instant petition requests that inventors H. Curlett, Padgett, S. Curlett, and Harder be added among the joint inventors for the subject application. A review of the application file history reveals that an oath or declaration under 37 CFR 1.63 executed by any of the named inventors was not filed prior to the filing of the subject petition.

It is noted that 37 CFR 1.48(f) provides that:

> If the correct inventor or inventors are not named on filing a nonprovisional application under § 1.53(b) without an executed oath or declaration under § 1.63 by any of the inventors, the first submission of an executed oath or declaration under § 1.63 by ay of the inventors during the pendency of the application will act to correct the earlier identification of inventorship.

An executed declaration had not been previously filed in this application. A properly executed declaration filed henceforth would be used to designate the inventorship for the application. It appears that the petition under 37 CFR 1.48 is premature and not necessary at this juncture. The petition is, therefore, dismissed as presenting a moot issue.

The inventorship for the application will be made of record when petitioner files a properly executed declaration.

TREATMENT UNDER 37 CFR 1.47(a)

A grantable petition under 37 CFR 1.47(a) requires:

(1) proof that the non-signing inventor(s) cannot be reached or refuses to sign the oath or declaration after having been presented with the application papers (specification, claims, and drawings);

(2) an acceptable oath or declaration in compliance with 35 U.S.C. §§ 115 and 116;

(3) the petition fee,

(4) a statement of the last known address of the non-signing inventor,

The instant petition lacks item (2) as set forth above.

As to item (2), Section 409.03 of the *Manual of Patent Examining Procedure* (MPEP) provides, in pertinent part, that:

> (A) All the available joint inventors must (1) make oath or declaration on their own behalf as required by 37 CFR 1.63 or 1.175 (see MPEP § 602 § 605.01, and § 1414) and (2) make oath or declaration on behalf of the nonsigning inventor as required by 37 CFR 1.64. An oath or declaration signed by all of the available joint inventors with the signature block of the nonsigning inventor(s) left blank may be treated as having been signed by all the available joint inventors on behalf of the nonsigning inventor(s), unless otherwise indicated.

The declaration filed May 12, 2008, is defective because the signature blocks for the inventors are not contained in one document--with pages numbered consecutively--or do not appear on separate, but complete, declarations containing signature blocks for all inventors. The declarations, as filed, do not give the impression that the inventors are signing on their own behalf and on behalf of the non-signing inventor . Neither do the declarations contain a signature block for the alleged non-signing inventors. The renewed petition must be accompanied by a declaration that complies with Section 409.03 as cited above.

TREATMENT UNDER 37 CFR 1.137(b)

Effective December 1, 1997, the provisions of 37 CFR 1.137(b) now provide that where the delay in reply was unintentional, a petition may be filed to revive an abandoned application or a lapsed patent pursuant to 37 CFR 1.137(b). A grantable petition pursuant to 37 CFR 1.137(b) must be accompanied by:

(1) the required reply, unless previously filed. In a non-provisional application abandoned for failure to prosecute, the required reply may be met by the filing of a continuing application. In an application or patent, abandoned or lapsed for failure to pay the issue fee, or any portion thereof, the required reply must be the payment of the issue fee or any outstanding balance thereof.

(2) the petition fee as set forth in 37 CFR 1.17(m);

(3) a statement that the entire delay in filing the required reply from the due date for the reply until the filing of a grantable petition pursuant to 37 CFR 1.137(b) was unintentional. The Commissioner may require additional information where there is a question whether the delay was unintentional; and

(4) any terminal disclaimer (and fee set forth in 37 CFR 1.20(d)) required pursuant to 37 CFR 1.137(c).

The instant petition does not satisfy the requirements of item (1) above.

The Notice to File Missing Parts of Non-Provisional Application required a properly executed declaration to be filed. The petition under 37 CFR 1.47(a) is not grantable and, therefore, neither is the petition under 37 CFR 1.137(b). The renewed petition under 37 CFR 1.137(b) must be accompanied by either a properly executed declaration or a grantable petition under 37 CFR 1.47(a).

Petitioner need not re-file all of the petition documents and exhibits previously filed. Rather, petitioner may simply file documents necessary to cure the deficiencies noted above.

Further correspondence with respect to this matter should be addressed as follows:

By mail: Mail Stop Petitions
Commissioner for Patents
P.O. Box 1450
Alexandria, VA 22313-1450

By FAX: (571) 273-8300
Attn: Office of Petitions

Telephone inquiries concerning this decision should be directed to the undersigned at (571) 272-3222.

Kenya A. McLaughlin
Petitions Attorney
Office of Petitions

UNITED STATES PATENT AND TRADEMARK OFFICE

Commissioner for Patents
United States Patent and Trademark Office
P.O. Box 1450
Alexandria, VA 22313-1450
www.uspto.gov

BRACEWELL & GIULIANI LLP
P.O. BOX 61389
HOUSTON TX 77208-1389

COPY MAILED
DEC 09 2008

In re Application of	:
Tibbitts, Galloway, Vuyk, H. Curlett, Padgett,	:
S. Curlett, and Harder	:
Application No. 11/801,268	: DECISION REFUSING STATUS
Filed: May 9, 2007	: UNDER 37 CFR 1.47(a) AND
Attorney Docket No. 66015.105086	: DECISION ON PETITION UNDER
For: IMPACT EXCAVATION SYSTEM AND METHOD	: PETITION UNDER 37 CFR 1.137(b)
WITH PARTICLE SEPARATION	

This is a decision on the renewed petitions under 37 CFR 1.47(a), and 37 CFR 1.137(b) filed October 2, 2008.

The petition under 37 CFR 1.47(a) is **dismissed.**

The petition under 37 CFR 1.137(b) is also **dismissed**.

Any request for reconsideration under this decision must be submitted within TWO (2) MONTHS from the mail date of this decision. Extensions of time under 37 CFR 1.136(a) are permitted. Failure to respond will result in the abandonment of this application. Any response should be titled "Request for Reconsideration of Petitions Under 37 CFR 1.47(a) and 37 CFR 1.137(b) .

The above-identified application was filed on May 9, 2007, without an executed oath or declaration. Accordingly, a "Notice to File Missing Parts Nonprovisional Application" (the "Notice") was mailed on June 1, 2007, requiring an executed oath or declaration and a surcharge for the late filing of the oath or declaration. The Notice allowed an extendable period for response of two months from its mailing date. A response was not received within the allowable period and-the application became abandoned on August 2, 2007. A Notice of Abandonment was mailed February 12, 2008. The instant renewed petitions were filed on October 2, 2008.

TREATMENT UNDER 37 CFR 1.47(a)

A grantable petition under 37 CFR 1.47(a) requires:

(1) proof that the non-signing inventor(s) cannot be reached or refuses to sign the oath or declaration after having been presented with the application papers (specification, claims, and drawings);

(2) an acceptable oath or declaration in compliance with 35 U.S.C. §§ 115 and 116;

(3) the petition fee,

(4) a statement of the last known address of the non-signing inventor,

The instant petition lacks item (2) as set forth above.

As to item (2), Section 409.03 of the *Manual of Patent Examining Procedure* (MPEP) provides, in pertinent part, that:

> (A) All the available joint inventors must (1) make oath or declaration on their own behalf as required by 37 CFR 1.63 or 1.175 (see MPEP § 602 § 605.01, and § 1414) and (2) make oath or declaration on behalf of the nonsigning inventor as required by 37 CFR 1.64. An oath or declaration signed by all of the available joint inventors with the signature block of the nonsigning inventor(s) left blank may be treated as having been signed by all the available joint inventors on behalf of the nonsigning inventor(s), unless otherwise indicated.

The declaration filed October 2, 2008, is defective because the signature blocks for the inventors does not designate the order of inventorship, i.e., first second, third, etc. The signature blocks denote the inventors as "first or sole" which is not accurate excepting the first named inventor. Additionally, the signature block for inventor Padgett contains an un-initialed strike-through. The renewed petition must be accompanied by a declaration that complies with Section 409.03 as cited above and incorporates the requested corrections.

TREATMENT UNDER 37 CFR 1.137(b)

Effective December 1, 1997, the provisions of 37 CFR 1.137(b) now provide that where the delay in reply was unintentional, a petition may be filed to revive an abandoned application or a lapsed patent pursuant to 37 CFR 1.137(b). A grantable petition pursuant to 37 CFR 1.137(b) must be accompanied by:

(1) the required reply, unless previously filed. In a non-provisional application

abandoned for failure to prosecute, the required reply may be met by the filing of a continuing application. In an application or patent, abandoned or lapsed for failure to pay the issue fee, or any portion thereof, the required reply must be the payment of the issue fee or any outstanding balance thereof.

(2) the petition fee as set forth in 37 CFR 1.17(m);

(3) a statement that the entire delay in filing the required reply from the due date for the reply until the filing of a grantable petition pursuant to 37 CFR 1.137(b) was unintentional. The Commissioner may require additional information where there is a question whether the delay was unintentional; and

(4) any terminal disclaimer (and fee set forth in 37 CFR 1.20(d)) required pursuant to 37 CFR 1.137(c).

The instant petition does not satisfy the requirements of item (1) above.

The Notice to File Missing Parts of Non-Provisional Application required a properly executed declaration to be filed. The petition under 37 CFR 1.47(a) is not grantable and, therefore, neither is the petition under 37 CFR 1.137(b). The renewed petition under 37 CFR 1.137(b) must be accompanied by either a properly executed declaration or a grantable petition under 37 CFR 1.47(a).

Petitioner need not re-file all of the petition documents and exhibits previously filed. Rather, petitioner may simply file documents necessary to cure the deficiencies noted above.

Further correspondence with respect to this matter should be addressed as follows:

By mail: Mail Stop Petitions
Commissioner for Patents
P.O. Box 1450
Alexandria, VA 22313-1450

By FAX: (571) 273-8300
Attn: Office of Petitions

Telephone inquiries concerning this decision should be directed to the undersigned at (571) 272-3222.

Kenya A. McLaughlin

Kenya A. McLaughlin
Petitions Attorney
Office of Petitions

UNITED STATES PATENT AND TRADEMARK OFFICE

Commissioner for Patents
United States Patent and Trademark Office
P.O. Box 1450
Alexandria, VA 22313-1450
www.uspto.gov

BRACEWELL & GIULIANI LLP
P.O. BOX 61389
HOUSTON TX 77208-1389

MAILED

APR 24 2009

OFFICE OF PETITIONS

In re Application of	:
Tibbitts, Galloway, Vuyk, H. Curlett, Padgett,	:
S. Curlett, and Harder	:
Application No. 11/801,268	: DECISION ACCORDING STATUS
Filed: May 9, 2007	: UNDER 37 CFR 1.47(a) AND
Attorney Docket No. 66015.105086	: DECISION ON PETITION UNDER
For: IMPACT EXCAVATION SYSTEM AND METHOD	: PETITION UNDER 37 CFR 1.137(b)
WITH PARTICLE SEPARATION	

This is in response to the petitions under 37 CFR 1.47(a) and 37 CFR 1.137(b), filed March 30, 2009.

The petition under 37 CFR 1.47(a) is **GRANTED**.

The petition under 37 CFR 1.137(b) is also **GRANTED**.

The above-identified application was filed on May 9, 2007, without an executed oath or declaration. Accordingly, a "Notice to File Missing Parts Nonprovisional Application" (the "Notice") was mailed on June 1, 2007, requiring an executed oath or declaration and a surcharge for the late filing of the oath or declaration. The Notice allowed an extendable period for response of two months from its mailing date. A response was not received within the allowable period and the application became abandoned on August 2, 2007. A Notice of Abandonment was mailed February 12, 2008. A petition under 37 CFR 1.47(a) and 1.137(b) was filed on October 2, 2008, and dismissed by a decision mailed December 9, 2009. The decision allowed an extendable period for reply of two months from its mailing date. The instant renewed petition was filed on March 30, 2009, with a request for an extension of time within the second month.

TREATMENT UNDER 37 CFR 1.47(a)

The above-identified application and papers have been reviewed and found in compliance with 37 CFR 1.47(a). This application is hereby accorded Rule 1.47(a) status.

Petitioner has shown that inventors H. Curlett and S. Curlett have constructively refused to join the filing of the above-identified application after having been presented with the application papers. The above-identified application and papers have been reviewed and found in compliance with 37 CFR 1.47(a). This application is hereby accorded Rule 1.47(a) status.

As provided in Rule 1.47(c), this Office will forward notice of this application's filing to the non-

signing inventor at the addresses given in the petition. Notice of the filing of this application will also be published in the Official Gazette.

TREATMENT UNDER 37 CFR 1.1.137(b)

The petition is granted.

The declaration under 37 CFR 1.63 filed March 30, 2009, is noted.

This application will be forwarded to the Office of Patent Application Processing for further processing.

Telephone inquiries concerning this decision should be directed to the undersigned at (571) 272-3222.

Kenya A. McLaughlin
Petitions Attorney
Office of Petitions

UNITED STATES PATENT AND TRADEMARK OFFICE

Commissioner for Patents
United States Patent and Trademark Office
P.O. Box 1450
Alexandria, VA 22313-1450
www.uspto.gov

COPY MAILED

SEP 21 2009

OFFICE OF PETITIONS

BRACEWELL & GIULIANI LLP
P.O. Box 61389
Houston, TX 77208-1389

In re Application of	:	
Gordon A. Tibbits, et al.	:	
Application No. 11/801,268	:	DECISION ON PETITION
Filed: May 9, 2007	:	TO WITHDRAW
Attorney Docket No. 66015-105086	:	FROM RECORD
	:	

This is a decision on the Request to Withdraw as attorney or agent of record under 37 C.F.R. § 1.36(b), filed July 27, 2009.

The request is **APPROVED**.

A grantable request to withdraw as attorney/agent of record must be signed by every attorney/agent seeking to withdraw or contain a clear indication that one attorney is signing on behalf of another/others. A request to withdraw will not be approved unless at least 30 (thirty) days would remain between the date of approval and the later of the expiration date of a time to file a response or the expiration date of the maximum time period which can be extended under 37 C.F.R. § 1.136(a).

The request was signed by Jeffrey S. Whittle on behalf of all attorneys of record. All attorneys/agents have been withdrawn. Applicant is reminded that there is no attorney of record at this time.

The correspondence address of record has been changed and the new correspondence address is the address indicated below.

Telephone inquiries concerning this decision should be directed to Terri Johnson at 571-272-2991.

Terri Johnson
Petitions Examiner
Office of Petitions

cc: **Particle Drilling Technologies, Inc.**
5611 Baird Cout.
Houston, TX 77041

UNITED STATES PATENT AND TRADEMARK OFFICE

UNITED STATES DEPARTMENT OF COMMERCE
United States Patent and Trademark Office
Address: COMMISSIONER FOR PATENTS
P.O. Box 1450
Alexandria, Virginia 22313-1450
www.uspto.gov

APPLICATION NUMBER	FILING OR 371(C) DATE	FIRST NAMED APPLICANT	ATTY. DOCKET NO./TITLE
11/801,268	05/09/2007	Gordon A. Tibbitts	66015.105086

CONFIRMATION NO. 1902

POWER OF ATTORNEY NOTICE

35979
BRACEWELL & GIULIANI LLP
P.O. BOX 61389
HOUSTON, TX 77208-1389

OC000000037886818

Date Mailed: 09/21/2009

NOTICE REGARDING CHANGE OF POWER OF ATTORNEY

This is in response to the Power of Attorney filed 07/27/2009.

- The withdrawal as attorney in this application has been accepted. Future correspondence will be mailed to the new address of record. 37 CFR 1.33.

/tsjohnson/

Office of Data Management, Application Assistance Unit (571) 272-4000, or (571) 272-4200, or 1-888-786-0101

UNITED STATES PATENT AND TRADEMARK OFFICE

Commissioner for Patents
United States Patent and Trademark Office
P.O. Box 1450
Alexandria, VA 22313-1450
www.uspto.gov

CARR & FERRELL LLP
2200 GENG ROAD
PALO ALTO CA 94303

COPY MAILED

OCT 1 0 2008

OFFICE OF PETITIONS

In re Application of

WANG, Zhonghui A. et al.
Application No. 11/801,269
Filed: May 08, 2007
Attorney Docket No. **PA4139US**

DECISION ON PETITION
TO WITHDRAW
FROM RECORD

This is a decision on the Request to Withdraw as attorney or agent of record under 37 C.F.R. § 1.36(b), filed June 30, 2008.

The request is **APPROVED**.

A grantable request to withdraw as attorney/agent of record must be signed by every attorney/agent seeking to withdraw or contain a clear indication that one attorney is signing on behalf of another/others. The Office requires the practitioner(s) requesting withdrawal to certify that he, she, or they have: (1) given reasonable notice to the client, prior to the expiration of the response period, that the practitioner(s) intends to withdraw from employment; (2) delivered to the client or a duly authorized representative of the client all papers and property (including funds) to which the client is entitled; and (3) notified the client of any responses that may be due and the time frame within which the client must respond, pursuant 37 CFR 10.40(c).

The request was signed by V. Randall Gard on behalf of all attorneys of record who are associated with customer No. 22830. All attorneys/agents associated have been withdrawn. Applicant is reminded that there is no attorney of record at this time.

All future correspondence will be directed to the first named inventor Zhongui A. Wang at the address indicated below.

There are no outstanding office actions at this time.

Telephone inquiries concerning this decision should be directed to Michelle R. Eason at 571-272-4231.

Michelle R. Eason
Paralegal Specialist
Office of Petitions

cc: **ZHONGUI A. WANG**
LAM RESEARCH CORPORATION
4650 CUSHING PARKWAY
FREMONT, CA 94538

UNITED STATES PATENT AND TRADEMARK OFFICE

UNITED STATES DEPARTMENT OF COMMERCE
United States Patent and Trademark Office
Address: COMMISSIONER FOR PATENTS
P.O. Box 1450
Alexandria, Virginia 22313-1450
www.uspto.gov

IP SECTION, KAY L. SCHWARTZ
GARDERE WYNNE SEWELL LLP
3000 THANKSGIVING TOWER
1601 ELM STREET, SUITE 3000
DALLAS, TX 75201

Mail Date: 04/21/2010

Applicant	: Joe D. Robinson	: DECISION ON REQUEST FOR
Patent Number	: 7640759	: RECALCULATION of PATENT
Issue Date	: 01/05/2010	: TERM ADJUSTMENT IN VIEW
Appliction No	: 11/801,273	: OF WYETH AND NOTICE OF INTENT TO
Filed	: 05/08/2007	: ISSUE CERTIFICATE OF CORRECTION
		:

The Request for Recalculation is **GRANTED** to the extent indicated.

The patent term adjustment has been determined to be **269** days. The USPTO will *sua sponte* issue a certificate of correction reflecting the amount of PTA days determined by the recalculation.

Prior to the issuance of the certificate of correction, the USPTO will afford patentee an opportunity to be heard and request reconsideration. Accordingly, patentee has **one month or thirty (30) days**, whichever is longer, to file a request for reconsideration of this patent term adjustment calculation. See 35 U.S.C. 154(b)(3)(B)(ii) and 37 CFR 1.322(a)(4). No extensions of time will be granted under 37 CFR 1.136.

Patentee should use document code PET.OP if electronically filing a request for reconsideration of this patent term adjustment calculation. The patentee must also include the information required by 37 CFR 1.705(b)(2) and the fee required by 37 CFR 1.18(e). If patentee does not file a timely request for reconsideration of this patent term adjustment calculation including the information required by 37 CFR 1.705(b)(2) and the fee required by 37 CFR 1.18(e), the USPTO will issue a certificate of correction reflecting the PTA determination noted above.

Patentee should be aware that in order to preserve the right to review in the United States District Court for the District of Columbia of the USPTO patent term adjustment determination, patentee must ensure that he or she also take the steps required under 35 U.S.C. 154(b)(4)(A) in a timely manner. Nothing in the request for recalculation should be construed as providing an alternative time frame for commencing a civil action under 35 U.S.C. 154(b)(4)(A).

Any questions concerning this decision should be directed to the Office of Patent Legal Administration at 571-272-7702.

UNITED STATES PATENT AND TRADEMARK OFFICE

UNITED STATES DEPARTMENT OF COMMERCE
United States Patent and Trademark Office
Address: COMMISSIONER FOR PATENTS
P.O. Box 1450
Alexandria, Virginia 22313-1450
www.uspto.gov

KENYON & KENYON LLP
ONE BROADWAY
NEW YORK, NY 10004

Mail Date: 04/21/2010

Applicant	: Kejun Kang	: DECISION ON REQUEST FOR
Patent Number	: 7570737	: RECALCULATION of PATENT
Issue Date	: 08/04/2009	: TERM ADJUSTMENT IN VIEW
Appliction No	: 11/801,279	: OF WYETH AND NOTICE OF INTENT TO
Filed	: 05/08/2007	: ISSUE CERTIFICATE OF CORRECTION
		:

The Request for Recalculation is **GRANTED** to the extent indicated.

The patent term adjustment has been determined to be **0** days. The USPTO will *sua sponte* issue a certificate of correction reflecting the amount of PTA days determined by the recalculation.

Prior to the issuance of the certificate of correction, the USPTO will afford patentee an opportunity to be heard and request reconsideration. Accordingly, patentee has **one month or thirty (30) days**, whichever is longer, to file a request for reconsideration of this patent term adjustment calculation. See 35 U.S.C. 154(b)(3)(B)(ii) and 37 CFR 1.322(a)(4). No extensions of time will be granted under 37 CFR 1.136.

Patentee should use document code PET.OP if electronically filing a request for reconsideration of this patent term adjustment calculation. The patentee must also include the information required by 37 CFR 1.705(b)(2) and the fee required by 37 CFR 1.18(e). If patentee does not file a timely request for reconsideration of this patent term adjustment calculation including the information required by 37 CFR 1.705(b)(2) and the fee required by 37 CFR 1.18(e), the USPTO will issue a certificate of correction reflecting the PTA determination noted above.

Patentee should be aware that in order to preserve the right to review in the United States District Court for the District of Columbia of the USPTO patent term adjustment determination, patentee must ensure that he or she also take the steps required under 35 U.S.C. 154(b)(4)(A) in a timely manner. Nothing in the request for recalculation should be construed as providing an alternative time frame for commencing a civil action under 35 U.S.C. 154(b)(4)(A).

Any questions concerning this decision should be directed to the Office of Patent Legal Administration at 571-272-7702.

UNITED STATES PATENT AND TRADEMARK OFFICE

Commissioner for Patents
United States Patent and Trademark Office
P.O. Box 1450
Alexandria, VA 22313-1450
www.uspto.gov

MASUVALLEY & PARTNERS
8765 AERO DRIVE, SUITE 312
SAN DIEGO CA 92123

COPY MAILED

AUG 2 3 2007

OFFICE OF PETITIONS

In re Application of	:	
KOIKE, et al.	:	
Application No. 11/801,304	:	DECISION ON PETITION
Filed: May 9, 2007	:	TO MAKE SPECIAL UNDER
Attorney Docket No. **13024-301US**	:	37 CFR 1.102(c)(1)
	:	

This is a decision on the petition under 37 CFR 1.102(c)(1), filed July 27, 2007, to make the above-identified application special based on applicant's age as set forth in M.P.E.P. § 708.02, Section IV.

The petition is **GRANTED.**

A grantable petition to make an application special under 37 CFR 1.102(c)(1) and MPEP § 708.02, Section IV: Applicant's Age must be accompanied by evidence showing that at least one of the applicants is 65 years of age, or more, such as a birth certificate or a statement by applicant. No fee is required

The instant petition includes the declaration of inventor Hideaki Kawakami, attesting to his age. Accordingly, the above-identified application has been accorded "special" status.

Telephone inquiries concerning this decision should be directed to the undersigned at 571-272-7253.

All other inquiries concerning either the examination or status of the application should be directed to the Technology Center.

The application is being forwarded to the Technology Center Art Unit 2811 for action on the merits commensurate with this decision.

Monica A. Graves
Petitions Examiner
Office of Petitions

UNITED STATES PATENT AND TRADEMARK OFFICE

Commissioner for Patents
United States Patent and Trademark Office
P.O. Box 1450
Alexandria, VA 22313-1450
www.uspto.gov

MAILED

MAR 2 6 2010

OFFICE OF PETITIONS

Rimas Lukas
Vertiflex, Inc.
1351 Calle Avanzado
San Clemente, CA 92673

In re Application of	:	
Moti Altarac, et al.	:	
Application No. 11/801,319	:	DECISION ON PETITION
Filed: May 9, 2007	:	TO WITHDRAW
Attorney Docket No. 65837-8008US	:	FROM RECORD
	:	

This is a decision on the Request to Withdraw as attorney or agent of record under 37 C.F.R. § 1.36(b), filed January 11, 2010.

The request is **NOT APPROVED** because it is moot.

A review of the file record indicates that the power of attorney to Rimas Lukas has been revoked by the assignee of the patent application on January 14, 2010. Accordingly, the request to withdraw under 37 C.F.R. § 1.36(b) is moot.

All future communications from the Office will continue to be directed to the below-listed address until otherwise notified by applicant.

Telephone inquires concerning this decision should be directed to Terri Johnson at 571-272-2991.

Terri Johnson
Petitions Examiner
Office of Petitions

cc: **Perkins Coie LLP**
Patent-Sea
P.O. Box 1247
Seattle, WA 98111-1247

UNITED STATES PATENT AND TRADEMARK OFFICE

Commissioner for Patents
United States Patent and Trademark Office
P.O. Box 1450
Alexandria, VA 22313-1450
www.uspto.gov

KLARQUIST SPARKMAN LLP
121 SW SALMON STREET
SUITE 1600
PORTLAND OR 97204

COPY MAILED
DEC 26 2007
OFFICE OF PETITIONS

In re Application of	:	
Ning, et al.	:	
Application No. 11/801,332	:	DECISION REFUSING STATUS
Filed: May 8, 2007	:	UNDER 37 CFR 1.47(a)
Attorney Docket No. 7822-78263-02	:	

This is in response to the petition under 37 CFR 1.47, filed December 6, 2007, which is properly treated as a petition under 37 CFR 1.47(a).

The petition under 37 CFR 1.47(a) is **DISMISSED**.

Rule 47 applicant is given TWO MONTHS from the mailing date of this decision to reply, correcting the below-noted deficiencies. Any reply should be entitled "Request for Reconsideration of Petition Under 37 CFR 1.47(a)," and should only address the deficiencies noted below, except that the reply may include an oath or declaration executed by the non-signing inventor. **Failure to respond will result in abandonment of the application.** Any extensions of time will be governed by 37 CFR 1.136(a).

A grantable petition under 37 CFR 1.47(a) requires: (1) proof that the non-signing inventor cannot be reached after diligent effort or refuses to sign the oath or declaration after having been presented with the application papers (specification, claims, drawings, oath or declaration); (2) an acceptable oath or declaration in compliance with 37 CFR 1.63; (3) the petition fee;

and (4) a statement of the last known address of the non-signing inventor. Rule 47 applicant has not met requirement (1) above.

As to item (1), petitioner has not demonstrated that inventor Robert Lu has refused to sign the declaration. According to the petition, a copy of the application papers was mailed to the last known of address of Lu, in China, on November 26, 2007. On December 6, 2007 (Certificate of Mailing dated December 4, 2007), petitioner filed the instant petition.

Failure to receive an executed declaration from an inventor **eight days** after the inventor is mailed the application papers does not justify an inference that the inventor is refusing to sign the declaration. This is especially true here, when the inventor lives in China.

Petitioner has demonstrated inventor Ning's refusal to sign the oath or declaration.

Further correspondence with respect to this matter should be addressed as follows:

By mail: Mail Stop Petitions
Commissioner for Patents
P.O. Box 1450
Alexandria VA 22313-1450

By FAX: (571)273-8300
Attn: Office of Petitions

Telephone inquiries related to this decision may be directed to the undersigned at (571)272-3207.

Cliff Congo
Petitions Attorney
Office of Petitions

UNITED STATES PATENT AND TRADEMARK OFFICE

Commissioner for Patents
United States Patent and Trademark Office
P.O. Box 1450
Alexandria, VA 22313-1450
www.uspto.gov

KLARQUIST SPARKMAN LLP
121 SW SALMON STREET
SUITE 1600
PORTLAND OR 97204

COPY MAILED

MAY 27 2008

OFFICE OF PETITIONS

In re Application of	:	
Ning, et al.	:	
Application No. 11/801,332	:	DECISION ACCORDING STATUS
Filed: May 8, 2007	:	UNDER 37 CFR 1.47(a)
Attorney Docket No. 7822-78263-02	:	

This is in response to the renewed petition under 37 CFR 1.47(a), filed February 26, 2008.

The petition under 37 CFR 1.47(a) is **GRANTED**.

Rule 47 applicant filed a petition on December 6, 2007, to have the signing inventors make the application for patent without the signatures of inventors Ning and Lu. However, the petition was dismissed in a decision mailed on December 26, 2007. The decision stated that petitioner established that inventor Lu was forwarded a copy of the application papers on November 26, 2007. However, as this was only eight days prior to the filing of the petition, the Office could not infer that Lu had refused to sign the declaration. The decision acknowledged Ning's refusal to sign the declaration.

With the instant petition, Rule 47 applicant has affirmed that as of the filing date of the petition, applicant still has yet to receive an executed declaration from Lu.

The above-identified application and papers have been reviewed and found to be in compliance with 37 CFR 1.47(a). Accordingly, the above-identified application is hereby accorded Rule 1.47(a) status. As provided in 37 CFR 1.47(c), this Office will forward notice of this application's filing to the non-signing inventors at the last known address provided in the petition. Notice of the filing of this application will also be published in the Official Gazette.

The matter is being forwarded to the Office of Patent Application Processing for pre-examination processing.

Telephone inquiries related to this decision may be directed to the undersigned at (571)272-3207.

Cliff Congo
Petitions Attorney
Office of Petitions

UNITED STATES PATENT AND TRADEMARK OFFICE

Commissioner for Patents
United States Patent and Trademark Office
P.O. Box 1450
Alexandria, VA 22313-1450
www.uspto.gov

ALEXANDER NING
2122 SEA ISLAND PLACE
SAN MARCOS CA 92078

COPY MAILED

MAY 27 2008

OFFICE OF PETITIONS

In re Application of :
Ning, et al. :
Application No. 11/801,332 :
Filed: May 8, 2007 :
Title: Optical Assembly for Medical :
Imaging Devices :

LETTER

Dear Mr. Ning:

You are named as a joint inventor in the above-identified United States patent application filed under the provisions of 35 USC 116 (United States Code) and 37 CFR 1.47(a), Rules of Practice in Patent Cases. Should a patent be granted on the application you will be designated therein as a joint inventor.

As a joint inventor, you are entitled to inspect any paper in the file wrapper of the application, order copies of all or any part thereof (at a prepaid cost per 37 CFR 1.19) or make your position of record in the application. Alternatively, you may arrange to do any of the preceding through a registered patent attorney or agent presenting written authorization from you. If you care to join the application, agent of record would presumably assist you. Joining in the application would entail the filing of an appropriate oath or declaration by you pursuant to 37 CFR 1.63.

Telephone inquiries regarding this communication should be directed to Petitions Attorney Cliff Congo at (571)272-3207. Requests for information regarding your application should be directed to the File Information Unit at (703) 308-2733. Information regarding how to pay for and order a copy of the application, or a specific paper in the application, should be directed to the Certification Division at (703) 308-9726 or 1-800-972-6382 (outside the Washington D.C. area).

Cliff Congo
Petitions Attorney
Office of Petitions

UNITED STATES PATENT AND TRADEMARK OFFICE

Commissioner for Patents
United States Patent and Trademark Office
P.O. Box 1450
Alexandria, VA 22313-1450
www.uspto.gov

PERKINS COIE LLP
PATENT-SEA
P.O. BOX 1247
SEATTLE WA 98111-1247

COPY MAILED

AUG 15 2008

OFFICE OF PETITIONS

In re Application of	:	
Potterfield et al.	:	
Application No. 11/801,341	:	ON PETITION
Filed: May 8, 2007	:	
Attorney Docket No. 430108021US2	:	

This is a decision on the petition under 37 C.F.R. § 1.137(b), filed June 5, 2008, to revive the above-identified application.

The petition is **GRANTED**.

The petition satisfies the requirements of 37 CFR 1.137(b) in that petitioner has supplied (1) the reply in the form of a Substitute Specification, (2) the petition fee, and (3) a proper statement of unintentional delay.

Telephone inquiries concerning this decision should be directed to the undersigned at (571) 272-3206.

This matter is being referred to the Office of Patent Application Processing for further processing.

Liana Walsh
Petitions Examiner
Office of Petitions

UNITED STATES PATENT AND TRADEMARK OFFICE

Commissioner for Patents
United States Patent and Trademark Office
P.O. Box 1450
Alexandria, VA 22313-1450
www.uspto.gov

RICHARD ARON OSMAN
4070 CALLE ISABELLA
SAN CLEMENTE, CA 92672

COPY MAILED
MAY 23 2008
OFFICE OF PETITIONS

In re Application of	:	
DAWSON, Chandler	:	
Application No. 11/801,345	:	DECISION ON PETITION
Filed: May 8, 2007	:	TO MAKE SPECIAL UNDER
Attorney Docket No. **UCSF03-083-1**	:	37 CFR 1.102(c)(1)
	:	

This is a decision on the petition under 37 CFR 1.102(c)(1), filed January 14, 2008 to make the above-identified application special based on applicant's age as set forth in M.P.E.P. § 708.02, Section IV.

The petition is **GRANTED.**

A grantable petition to make an application special under 37 CFR 1.102(c)(1) and MPEP § 708.02, Section IV: Applicant's Age must be accompanied by evidence showing that at least one of the applicants is 65 years of age, or more, such as a birth certificate or a statement by applicant. No fee is required

The instant petition includes the statement of registered attorney Richard A. Osman (registration number 36,627) attesting that inventor Chandler Dawson is 65 years of age, or more. Accordingly, the above-identified application has been accorded "special" status.

Inquiries concerning either the examination or status of the application should be directed to the Technology Center at 571-272-1600.

Telephone inquiries concerning this decision should be directed to the undersigned at 571-272-7253.

The application is being forwarded to the Technology Center Art Unit 1623 for action on the merits commensurate with this decision.

MaGraves

Monica A. Graves
Petitions Examiner
Office of Petitions

UNITED STATES PATENT AND TRADEMARK OFFICE

Commissioner for Patents
United States Patent and Trademark Office
P.O. Box 1450
Alexandria, VA 22313-1450
www.uspto.gov

COPY MAILED

JUN 13 2008

RICHARD ARON OSMAN
4070 CALLE ISABELLA
SAN CLEMENTE CA 92672

In re Application of	:	
Dawson	:	DECISION ON PETITION
Application No.: 11/801,345	:	
Filed: 8 May, 2007	:	
Attorney Docket No.: UCSF03-083-1	:	

This is the decision in response to the petition under 37 C.F.R. §1.47(b), filed on 14 January, 2008, and supplemented on or about 11 June, 2008.

The petition under 37 C.F.R. §1.47(b), is **GRANTED.**

Petitioner has shown that the non-signing inventor has not replied and thus constructively has refused to sign/join in the filing of the above-identified application.

The application and papers have been reviewed and found in compliance with 37 C.F.R. §1.47(b). This application is hereby accorded Rule 1.47(b) status.

The record reflects that: Petitioner demonstrates that the entire application—description, claims, abstract and drawings—was sent to and received at the last known residence address the non-signing inventor (or through the Counsel of the non-signing inventor), and that the non-signing inventor has since failed and, thus, constructively refused to join in the filing of the above-identified application.

The availability of applications and application papers online to applicants/practitioners who diligently associate their Customer Number with the respective application(s) now provides an applicant/practitioner on-demand information as to events/transactions in an application. Thus,

now if one wishes to know the progress in and/or status of an application or the accuracy of the data therein, one need only look at the file online.

Out of an abundance of caution, Petitioners always are reminded that those registered to practice *and* all others who make representations before the Office must inquire into the underlying facts of representations made to the Office and support averments with the appropriate documentation–since all owe to the Office the continuing duty to disclose.[1]

CONCLUSION

The instant petition under 37 C.F.R. §1.47 is **granted**.

As provided in 37 C.F.R. §1.47(c), this Office will forward notice of this application's filing to the non-signing inventor at the address given in the petition. Notice of the filing of this application will also be published in the Official Gazette.

The instant application is released to the Office of Patent Application Processing (OPAP) (formerly the Office of Initial Patent Examination (OIPE)) for further processing in due course.

While telephone inquiries regarding this decision may be directed to the undersigned at (571) 272-3214, it is noted that all practice before the Office is in writing (see: 37 C.F.R. §1.2[2]) and the proper authority for action on any matter in this regard are the statutes (35 U.S.C.), regulations (37 C.F.R.) and the commentary on policy (MPEP). Therefore, no telephone discussion may be controlling or considered authority for Petitioner's action(s).

/John J. Gillon, Jr./
John J. Gillon, Jr.
Senior Attorney
Office of Petitions

---

[1] See supplement of 17 June, 1999. The Patent and Trademark Office is relying on petitioner's duty of candor and good faith and accepting a statement made by Petitioner. See Changes to Patent Practice and Procedure, 62 Fed. Reg. at 53160 and 53178, 1203 Off. Gaz. Pat. Office at 88 and 103 (responses to comments 64 and 109)(applicant obligated under 37 C.F.R. §10.18 to inquire into the underlying facts and circumstances when providing statements to the Patent and Trademark Office). See specifically, the regulations at 37 C.F.R. §10.18.

[2] The regulations at 37 C.F.R. §1.2 provide:

§1.2 Business to be transacted in writing.
All business with the Patent and Trademark Office should be transacted in writing. The personal attendance of applicants or their attorneys or agents at the Patent and Trademark Office is unnecessary. The action of the Patent and Trademark Office will be based exclusively on the written record in the Office. No attention will be paid to any alleged oral promise, stipulation, or understanding in relation to which there is disagreement or doubt.

UNITED STATES PATENT AND TRADEMARK OFFICE

Commissioner for Patents
United States Patent and Trademark Office
P.O. Box 1450
Alexandria, VA 22313-1450
www.uspto.gov

COPY MAILED

JUN 13 2008

CHANDLER DAWSON
535 TAMALPAIS AVE.
MILL VALLEY, CA 94941

In re Application of	:	
Dawson	:	COMMUNICATION
Application No.: 11/801,345	:	
Filed: 8 May, 2007	:	
Attorney Docket No.: UCSF03-083-1	:	

Dear Chandler Dawson:

You are named as an inventor in the above-identified United States patent application, filed under the provisions of 35 U.S.C. 116 (United States Code), and 37 CFR 1.47, Rules of Practice in Patent Cases. Should a patent be granted on the application you will be designated therein as an inventor.

As a named inventor you are entitled to inspect any paper in the file wrapper of the application, order copies of all or any part thereof (at a prepaid cost per 37 CFR 1.19) or make your position of record in the application. Alternatively, you may arrange to do any of the preceding through a registered patent attorney or agent presenting written authorization from you. If you care to join the application, counsel of record (see below) would presumably assist you. Joining the application would entail the filing of an appropriate oath or declaration by you pursuant to 37 CFR 1.63.

Should you elect to join in the application, the contact information for Counsel of Record is set forth at the end of this Communication.

Should you seek to identify independent Counsel, you may find the Patent Attorneys/Agents Search engine of assistance (https://oedci.uspto.gov/OEDCI/).

Requests for information regarding your application should be directed to the File Information Unit at (703) 308-2733. Information regarding how to pay for and order a copy of the application, or a specific paper in the application, should be directed to the Certification Division at (571) 272-3150 or 1 (800) 972-6382 (outside the Washington, DC area).

While telephone inquiries regarding this communication may be directed to the undersigned at (571) 272-3214, it is noted that all practice before the Office is in writing (see: 37 C.F.R. §1.2[1]) and the proper authority for action on any matter in this regard are the statutes (35 U.S.C.), regulations (37 C.F.R.) and the commentary on policy (MPEP). Therefore, no telephone discussion may be controlling or considered authority for Petitioner's action(s). Moreover, the Office cannot neither advise you nor recommend Counsel in this matter.

/John J. Gillon, Jr./
John J. Gillon, Jr.
Senior Attorney
Office of Petitions

Counsel of Record:
RICHARD ARON OSMAN
4070 CALLE ISABELLA
SAN CLEMENTE CA 92672

---

[1] The regulations at 37 C.F.R. §1.2 provide:
§1.2 Business to be transacted in writing.
All business with the Patent and Trademark Office should be transacted in writing. The personal attendance of applicants or their attorneys or agents at the Patent and Trademark Office is unnecessary. The action of the Patent and Trademark Office will be based exclusively on the written record in the Office. No attention will be paid to any alleged oral promise, stipulation, or understanding in relation to which there is disagreement or doubt.

UNITED STATES PATENT AND TRADEMARK OFFICE

Commissioner for Patents
United States Patent and Trademark Office
P.O. Box 1450
Alexandria, VA 22313-1450
www.uspto.gov
DIW Jan-10

KEVIN DINNIENE OR AMISH DESAI
TANNER RESEARCH, INC.
825 SOUTH MYRTLE AVENUE
MONROVIA CA 91016-3424

COPY MAILED
JAN 19 2010

In re Application of	:	
Amish Desai et al	:	
Application No: 11/801,358	:	ON PETITION
Filing Date: May 9, 2007	:	
For: MULTILAYERED MICROCAVITIES	:	
AND ACTUATORS INCORPORATING	:	
SAME	:	

This is a decision on the petition under 37 CFR 1.137(a), filed on September 30, 2009, to revive the above-identified application.

The petition is **DISMISSED**.

Any request for reconsideration of this decision must be submitted within TWO (2) MONTHS from the mail date of this decision. Extensions of time under 37 CFR 1.136(a) are permitted. The reconsideration request should include a cover letter entitled "Renewed Petition under 37 CFR 1.137(a)" or "Renewed Petition under 37 CFR 1.137(b)." This is not a final agency decision.

This application became abandoned for failure to reply in a timely manner to the Restriction Requirement mailed December 16, 2008. Notice of Abandonment was mailed on July 20, 2009.

Petitioner files the above petition, accompanied by an amendment/election on September 30, 2009.

Petitioner asserts unavoidable delay in that the Office action mailed December 16, 2008 was never received.

A grantable petition to revive an abandoned application under 37 CFR 1.137(a) must be accompanied by:

> (1) the required reply, unless previously filed. In a nonprovisional application abandoned for failure to prosecute, the required reply may be met by the filing of a continuing application. In a nonprovisional application filed on or after June 8, 1995, and abandoned for failure to prosecute, the required reply may also be met by the filing of a request for continued examination in compliance with § 1.114. In an application or patent, abandoned or lapsed for failure to pay the issue fee or any portion thereof, the required reply must be the payment of the issue fee or any outstanding balance thereof. In an application, abandoned for failure to pay the publication fee, the required reply must include payment of the publication fee;
>
> (2) the petition fee as set forth in § 1.17(l);
>
> (3) a showing to the satisfaction of the Director that the entire delay in filing the required reply from the due date for the reply until the filing of a grantable petition pursuant to this paragraph was unavoidable; and
>
> (4) any terminal disclaimer (and fee as set forth in § 1.20(d)) required pursuant to paragraph (c) of this section.

This petition lacks items (3) above.

Decisions on reviving abandoned applications on the basis of "unavoidable" delay have adopted the reasonably prudent person standard in determining if the delay was unavoidable:

> The word 'unavoidable' . . . is applicable to ordinary human affairs, and requires no more or greater care or diligence than is generally used and observed by prudent and careful men in relation to their most important business. It permits them in the exercise of this care to rely upon the ordinary and trustworthy agencies of mail and telegraph, worthy and reliable employees, and such other means and instrumentalities as are usually employed in such important business. If unexpectedly, or through the unforeseen fault or imperfection of these agencies and instrumentalities,

> there occurs a failure, it may properly be said to be unavoidable, all other conditions of promptness in its rectification being present.[1]

The showing of record is inadequate to establish unavoidable delay within the meaning of 37 CFR 1.137(a). Specifically, an application is "unavoidably" abandoned only where petitioner, or counsel for petitioner, takes all action necessary for a proper response to the outstanding Office action, but through the intervention of unforeseen circumstances, such as failure or mail, telegraph, telefacsimile, or the negligence of otherwise reliable employees, the response is not timely received in the Office.[2]

With regards to the assertion that the Office action was never received, MPEP 711.03(c) states:

> In Delgar v. Schulyer, 172 USPQ 513 (D.D.C. 1971), the court decided that the Office should mail a new Notice of Allowance in view of the evidence presented in support of the contention that the applicant's representative did not receive the original Notice of Allowance. Under the reasoning of Delgar, an allegation that an Office action was never received may be considered in a petition to withdraw the holding of abandonment. If adequately supported, the Office may grant the petition to withdraw the holding of abandonment and remail the Office action. That is, the reasoning of Delgar is applicable regardless of whether an application is held abandoned for failure to timely pay the issue fee (35 U.S.C. 151) or for failure to prosecute (35 U.S.C. 133).
>
> To minimize costs and burdens to practitioners and the Office, the Office has modified the showing required to establish nonreceipt of an Office action. The showing required to establish nonreceipt of an Office communication must include a statement from the practitioner describing the system used for recording an Office action received at the correspondence address of record with the USPTO. The statement should

---

[1] In re Mattullath, 38 App. D.C. 497, 514-15 (1912)(quoting Ex parte Pratt, 1887 Dec. Comm'r Pat. 31, 32-33 (1887)); see also Winkler v. Ladd, 221 F. Supp. 550, 552, 138 USPQ 666, 167-68 (D.D.C. 1963), aff'd, 143 USPQ 172 (D.C. Cir. 1963); Ex parte Henrich, 1913 Dec. Comm'r Pat. 139, 141 (1913). In addition, decisions on revival are made on a "case-by-case basis, taking all the facts and circumstances into account."

[2] Ex parte Pratt, 1887 Dec. Comm'r Pat. 31 (Comm'r Pat. 1887).

> establish that the docketing system is sufficiently reliable. It is expected that the record would include, but not be limited to, the application number, attorney docket number, the mail date of the Office action and the due date for the response.
>
> Practitioner must state that the Office action was not received at the correspondence address of record, and that a search of the practitioner's record(s), including any file jacket or the equivalent, and the application contents, indicates that the Office action was not received. A copy of the record(s) used by the practitioner where the non-received Office action would have been entered had it been received is required. A copy of the practitioner's record(s) required to show non-receipt of the Office action should include the master docket for the firm. That is, if a three month period for reply was set in the nonreceived Office action, a copy of the master docket report showing all replies docketed for a date three months from the mail date of the nonreceived Office action must be submitted as documentary proof of nonreceipt of the Office action. If no such master docket exists, the practitioner should so state and provide other evidence such as, but not limited to, the following: the application file jacket; incoming mail log; calendar; reminder system; or the individual docket record for the application in question.
>
> The showing outlined above may not be sufficient if there are circumstances that point to a conclusion that the Office action may have been lost after receipt rather than a conclusion that the Office action was lost in the mail (e.g., if the practitioner has a history of not receiving Office actions).

The petition must be dismissed because petitioner has not provided: A statement from the practitioner describing the system used for recording an Office action received at the correspondence address of record with the USPTO. The statement should establish that the docketing system is sufficiently reliable; a copy of the master docket report showing all replies docketed for a date three months from the mail date of the nonreceived Office action must be submitted as documentary proof of nonreceipt of the Office action. If no such master docket exists, the practitioner should so state and provide other evidence such as, but not limited to, the following: the

application file jacket; incoming mail log; calendar; reminder system; or the individual docket record for the application in question.

If petitioner can provide a showing, as described above, that the Restriction Requirement mailed December 16, 2008, was not received, petitioner should file a renewed petition under 37 CFR 1.137(a), accompanied by such proof of nonreceipt of the Restriction Requirement mailed on December 16, 2008.

Further, petitioner is encouraged to note 37 CFR 1.33(b), which states:

> **(b) Amendments and other papers. Amendments and other papers, except for written assertions pursuant to § 1.27(c)(2)(ii) of this part, filed in the application must be signed by:**
>
> **(1) A registered patent attorney or patent agent of record appointed in compliance with § 1.32(b);**
>
> **(2) A registered patent attorney or patent agent not of record who acts in a representative capacity under the provisions of § 1.34;**
>
> **(3) An assignee as provided for under §3.71(b) of this chapter; or**
>
> **(4) All of the applicants (§ 1.41(b)) for patent, unless there is an assignee of the entire interest and such assignee has taken action in the application in accordance with § 3.71 of this chapter.**

An unsigned amendment (or other paper) or one not properly signed by a person having authority to prosecute the application is not entered. This applies, for instance, where the amendment (or other paper) is signed by only one of two applicants and the one signing has not been given a power of attorney by the other applicant.

The petition is signed by only one inventor. Additionally, the Office does not recognize Kevin Dinniene as making a statement of unavoidable delay.

A delay resulting from the lack of knowledge or improper application of the patent statute, rules of practice or the MPEP

does not constitute an "unavoidable" delay.[3] A delay caused by an applicant's lack of knowledge or improper application of the patent statute, rules of practice or the MPEP is not rendered "unavoidable" due to: (1) the applicant's reliance upon oral advice from Office employees; or (2) the Office's failure to advise the applicant of any deficiency in sufficient time to permit the applicant to take corrective action.[4]

As the showing presented is insufficient to establish unavoidable delay within the meaning of 35 U.S.C. § 133 and 37 CFR 1.137(a), the petition will be **dismissed.**

ALTERNATIVE VENUE

Petitioner may wish to consider filing a renewed petition under 37 CFR 1.137(b),[5] which now provides that where the delay in reply was unintentional, a petition may be filed to revive an abandoned application or a lapsed patent pursuant to 37 CFR 1.137(b).

The filing of a petition under the unintentional standard cannot be intentionally delayed and therefore should be filed promptly. A person seeking revival due to unintentional delay cannot make a statement that the delay was unintentional unless the entire delay, including the delay from the date it was discovered that

---

[3] Id.

[4] See In re Sivertz, 227 USPQ 255, 256 (Comm'r Pat. 1985); see also In re Colombo, Inc., 33 USPQ2d 1530, 1532 (Comm'r Pat. 1994)(while the Office attempts to notify applicants of deficiencies in their responses in a manner permitting a timely correction, the Office has no obligation to notify parties of deficiencies in their responses in a manner permitting a timely correction).

[5] Effective December 1, 1997, the provisions of 37 CFR 1.137(b) now provide that where the delay in reply was unintentional, a petition may be filed to revive an abandoned application or a lapsed patent pursuant to 37 CFR 1.137(b). A grantable petition filed under the provisions of 37 CFR 1.137(b) must be accompanied by:

(1) the required reply, unless previously filed. In a nonprovisional application abandoned for failure to prosecute, the required reply may be met by the filing of a continuing application. In a nonprovisional utility or plant application filed on or after June 8, 1995, and abandoned for failure to prosecute, the required reply may also be met by the filing of a request for continued examination in compliance with § 1.114. In an application or patent, abandoned or lapsed for failure to pay the issue fee or any portion thereof, the required reply must be the payment of the issue fee or any outstanding balance thereof. In an application, abandoned for failure to pay the publication fee, the required reply must include payment of the publication fee;

(2) the petition fee as set forth in 37 CFR 1.17(m);

(3) a statement that the entire delay in filing the required reply from the due date for the reply until the filing of a grantable petition pursuant to 37 CFR 1.137(b) was unintentional. The Director may required additional information where there is a question whether the delay was unintentional; and

(4) any terminal disclaimer (and fee as set forth in 37 CFR 1.20(d)) required pursuant to 37 CFR 1.137(c)).

the application was abandoned until the filing of the petition to revive under 37 CFR 1.137(b), was unintentional. A statement that the delay was unintentional is not appropriate if petitioner intentionally delayed the filing of a petition for revival under 37 CFR 1.137(b).

Further correspondence with respect to this matter should be delivered through one of the following mediums:

By mail: Mail Stop PETITIONS
Commissioner for Patents
Post Office Box 1450
Alexandria, VA 22313-1450

By hand: Customer Service Window
Mail Stop Petitions
Randolph Building
401 Dulany Street
Alexandria, VA 22314

By fax: (571) 273-8300
ATTN: Office of Petitions

By internet: EFS-Web
www.uspto.gov/ebc/efs_help.html
(for help using EFS-Web call the Patent Electronic Business Center at (866) 217-9197)

Any questions concerning this matter may be directed to the undersigned at (571) 272-3208.

/KOC/
Karen Creasy
Petitions Examiner
Office of Petitions

UNITED STATES PATENT AND TRADEMARK OFFICE

Commissioner for Patents
United States Patent and Trademark Office
P.O. Box 1450
Alexandria, VA 22313-1450
www.uspto.gov

KEVIN DINNIENE OR AMISH DESAI
TANNER RESEARCH, INC.
825 SOUTH MYRTLE AVENUE
MONROVIA CA 91016-3424

MAILED

MAY 10 2010

OFFICE OF PETITIONS

In re Application of	:	
Amish Desai et al	:	
Application No. 11/801,358	:	DECISION ON PETITION
Filed: May 9, 2007	:	
Attorney Docket No. PC Initiator	:	

This is a decision on the petition under the unintentional provisions of 37 CFR 1.137(b), filed February 4, 2010, to revive the above-identified application.

The petition is **GRANTED**.

The petition satisfies the conditions for revival pursuant to the provisions of 37 CFR 1.137(b) in that (1) the reply in the form of an amendment; (2) the petition fee; and (3) the required statement of unintentional delay have been received. Accordingly, the reply to the restriction requirement mailed December 16, 2008, is accepted as having been unintentionally delayed.

Telephone inquiries concerning this decision should be directed to the undersigned at (571) 272-3208.

This application is being referred to Technology Center AU 3641 for appropriate action by the Examiner in the normal course of business on the reply received September 30, 2009.

/KOC/
Karen Creasy
Petitions Examiner
Office of Petitions

UNITED STATES PATENT AND TRADEMARK OFFICE

UNITED STATES DEPARTMENT OF COMMERCE
United States Patent and Trademark Office
Address: COMMISSIONER FOR PATENTS
P.O. Box 1450
Alexandria, Virginia 22313-1450
www.uspto.gov

APPLICATION NO.	FILING DATE	FIRST NAMED INVENTOR	ATTORNEY DOCKET NO.	CONFIRMATION NO.
11/801,364	05/09/2007	Yoichiro Sako	S1459.70331US00	2942

7590 09/25/2009
WOLF GREENFIELD & SACKS, P.C.
600 ATLANTIC AVENUE
BOSTON, MA 02210-2206

EXAMINER

ART UNIT	PAPER NUMBER
2622	

MAIL DATE	DELIVERY MODE
09/25/2009	PAPER

DECISION GRANTING PETITION UNDER 37 CFR 1.138(d)

The declaration of express abandonment is recognized

This is in response to the petition under 37 CFR 1.138(d), requesting for a refund of any previously paid search fee and excess claims fee in the above-identified application.

The petition is granted.

The express abandonment is recognized. Any previously paid search fee and excess claims fee are hereby refunded.

Telephone inquiries should be directed to the Office of Data Management at (571) 272-4200.

Nina Farmer

Patent Publication Branch
Office of Data Management

Repin. Refd 09/25/2009 NFARMER 0016143200
DA#:232825 Name/Number:11801364
FC: 8284 $1900.00 CR

Adjustment date: 09/25/2009 NFARMER
05/11/2007 EAYALEW1 00000051 11801364
02 FC:1111 -500.00 OP
04 FC:1201 -1000.00 OP
05 FC:1202 -400.00 OP

FORM PET651G (Rev. 08/07)

UNITED STATES PATENT AND TRADEMARK OFFICE

Commissioner for Patents
United States Patent and Trademark Office
P.O. Box 1450
Alexandria, VA 22313-1450
www.uspto.gov

Tarolli, Sundheim, Covell & Tummino, LLP
1300 East Ninth Street, Suite 1700
Cleveland, OH 44114

COPY MAILED

JAN 21 2009

In re Application of :
Steven E. Greer :
Application No. 11/801,393 : DECISION ON PETITION
Filed: May 9, 2007 : TO WITHDRAW
Attorney Docket No. G55 - 8406 : FROM RECORD

This is a decision on the Request to Withdraw as attorney or agent of record under 37 C.F.R. § 1.36(b), filed November 28, 2008.

The request is **APPROVED**.

A grantable request to withdraw as attorney/agent of record must be signed by every attorney/agent seeking to withdraw or contain a clear indication that one attorney is signing on behalf of another/others. A request to withdraw will not be approved unless at least 30 (thirty) days would remain between the date of approval and the later of the expiration date of a time to file a response or the expiration date of the maximum time period which can be extended under 37 C.F.R. § 1.136(a).

The request was signed by Calvin G. Covell on behalf of all attorneys/agents of record. All attorneys/agents of record have been withdrawn.

Applicant is reminded that there is no attorney of record at this time.

The correspondence address has been changed and is copied below.

Telephone inquiries concerning this decision should be directed to Kimberly Inabinet at 571-272-4618.

Kimberly Inabinet
Petitions Examiner
Office of Petitions

cc: Steven E. Greer
Greer Surgical
200 Rector Place – #35F
New York, NY 10280

UNITED STATES PATENT AND TRADEMARK OFFICE

UNITED STATES DEPARTMENT OF COMMERCE
United States Patent and Trademark Office
Address: COMMISSIONER FOR PATENTS
P.O. Box 1450
Alexandria, Virginia 22313-1450
www.uspto.gov

APPLICATION NUMBER	FILING OR 371(C) DATE	FIRST NAMED APPLICANT	ATTY. DOCKET NO./TITLE
11/801,393	05/09/2007	Steven E. Greer	G55-8406

CONFIRMATION NO. 3543

POWER OF ATTORNEY NOTICE

26294
TAROLLI, SUNDHEIM, COVELL & TUMMINO L.L.P.
1300 EAST NINTH STREET, SUITE 1700
CLEVEVLAND, OH 44114

OC000000034128935

Date Mailed: 01/21/2009

NOTICE REGARDING CHANGE OF POWER OF ATTORNEY

This is in response to the Power of Attorney filed 11/28/2008.

- The withdrawal as attorney in this application has been accepted. Future correspondence will be mailed to the new address of record. 37 CFR 1.33.

/kainabinet/

Office of Data Management, Application Assistance Unit (571) 272-4000, or (571) 272-4200, or 1-888-786-0101

UNITED STATES PATENT AND TRADEMARK OFFICE

Commissioner for Patents
United States Patent and Trademark Office
P.O. Box 1450
Alexandria, VA 22313-1450
www.uspto.gov

MAILED

JUN 07 2010

OFFICE OF PETITIONS

THE MATTHEWS FIRM
2000 BERING DRIVE
SUITE 700
HOUSTON, TX 77057

In re Application of	:	
Mark L. Welker	:	
Application No. 11/801,403	:	DECISION ON PETITION
Filed: May 8, 2007	:	
Attorney Docket No. WEL03A	:	

This is a decision on the petition under the unintentional provisions of 37 CFR 1.137(b), filed April 7, 2010, to revive the above-identified application.

The petition is **GRANTED**.

The petition satisfies the conditions for revival pursuant to the provisions of 37 CFR 1.137(b) in that (1) the reply in the form of an amendment; (2) the petition fee; and (3) the required statement of unintentional delay have been received. Accordingly, the reply to the nonfinal rejection mailed June 3, 2010, is accepted as having been unintentionally delayed.

Telephone inquiries concerning this decision should be directed to the undersigned at (571) 272-3208.

This application is being referred to Technology Center AU 2885 for appropriate action by the Examiner in the normal course of business on the reply received April 7, 2010.

/KOC/
Karen Creasy
Petitions Examiner
Office of Petitions

UNITED STATES PATENT AND TRADEMARK OFFICE

UNITED STATES DEPARTMENT OF COMMERCE
United States Patent and Trademark Office
Address: COMMISSIONER FOR PATENTS
P.O. Box 1450
Alexandria, Virginia 22313-1450
www.uspto.gov

APPLICATION NUMBER	FILING OR 371(C) DATE	FIRST NAMED APPLICANT	ATTY. DOCKET NO./TITLE
11/801,403	05/08/2007	Mark L. Welker	WEL03A

CONFIRMATION NO. 3533

POA ACCEPTANCE LETTER

21897
THE MATTHEWS FIRM
2000 BERING DRIVE
SUITE 700
HOUSTON, TX 77057

OC000000041928200

Date Mailed: 06/03/2010

NOTICE OF ACCEPTANCE OF POWER OF ATTORNEY

This is in response to the Power of Attorney filed 04/07/2010.

The Power of Attorney in this application is accepted. Correspondence in this application will be mailed to the above address as provided by 37 CFR 1.33.

/kocreasy/

Office of Data Management, Application Assistance Unit (571) 272-4000, or (571) 272-4200, or 1-888-786-0101

UNITED STATES PATENT AND TRADEMARK OFFICE

UNITED STATES DEPARTMENT OF COMMERCE
United States Patent and Trademark Office
Address: COMMISSIONER FOR PATENTS
P.O. Box 1450
Alexandria, Virginia 22313-1450
www.uspto.gov

APPLICATION NO.	FILING DATE	FIRST NAMED INVENTOR	ATTORNEY DOCKET NO.	CONFIRMATION NO.
11/801,404	05/09/2007	Min Wu	318305.01	3519

69316 7590 04/13/2010
MICROSOFT CORPORATION
ONE MICROSOFT WAY
REDMOND, WA 98052

EXAMINER
LY, ANH

ART UNIT	PAPER NUMBER
2162	

NOTIFICATION DATE	DELIVERY MODE
04/13/2010	ELECTRONIC

Please find below and/or attached an Office communication concerning this application or proceeding.

The time period for reply, if any, is set in the attached communication.

Notice of the Office communication was sent electronically on above-indicated "Notification Date" to the following e-mail address(es):

DBOUTON@MICROSOFT.COM
vffiling@microsoft.com
stevensp@microsoft.com

UNITED STATES PATENT AND TRADEMARK OFFICE

Commissioner for Patents
United States Patent and Trademark Office
P.O. Box 1450
Alexandria, VA 22313-1450
www.uspto.gov

MICROSOFT CORPORATION
ONE MICROSOFT WAY
REDMOND WA 98052

MAILED

APR 13 2010

OFFICE OF PETITIONS

In re Application of	:	
Min Wu, et al.	:	
Application No. 11/801,404	:	DECISION GRANTING PETITION
Filed: May 9, 2007	:	UNDER 37 CFR 1.313(c)(2)
Attorney Docket No. 318305.01	:	

This is a decision on the petition under 37 CFR 1.313(c)(2), filed, April 1, 2010 to withdraw the above-identified application from issue after payment of the issue fee.

The petition is **GRANTED**.

The above-identified application is withdrawn from issue for consideration of a submission under 37 CFR 1.114 (request for continued examination). *See* 37 CFR 1.313(c)(2).

Petitioner is advised that the issue fee paid on March 18, 2010 cannot be refunded. If, however, this application is again allowed, petitioner may request that it be applied towards the issue fee required by the new Notice of Allowance.[1]

Telephone inquiries should be directed to Terri Johnson at (571) 272-2991.

This application is being referred to Technology Center AU 2162 for processing of the request for continued examination under 37 CFR 1.114 and for consideration of concurrently filed information disclosure statement.

Terri Johnson
Petitions Examiner
Office of Petitions

---

[1] *The request to apply the issue fee to the new Notice may be satisfied by completing and returning the new Part B – Fee(s) Transmittal Form (along with any balance due at the time of submission). Petitioner is advised that the Issue Fee Transmittal Form must be completed and timely submitted to avoid abandonment of the application.*

UNITED STATES PATENT AND TRADEMARK OFFICE

Commissioner for Patents
United States Patent and Trademark Office
P.O. Box 1450
Alexandria, VA 22313-1450
www.uspto.gov

MAILED

SEP 18 2009

OFFICE OF PETITIONS

LIMIN WEN
NICHOLS BUILDING 1ST FLOOR
ONE BUNGTOWN ROAD
COLD SPRING HARBOR NY 11724

In re Application of Patrick Timothy Lemke Application No. 11/801,435 Filed: May 10, 2007 Attorney Docket No. LEMKE01	DECISION ON PETITION

This is a decision on the petition under the unavoidable provisions of 37 CFR 1.137(a), filed July 8, 2009, to revive the above-identified application.

The petition is **DISMISSED.**

Any further petition to revive must be submitted within TWO (2) MONTHS from the mail date of this decision. Extensions of time under 37 CFR 1.136(a) are permitted. The reconsideration request should include a cover letter entitled "Renewed Petition under 37 CFR 1.137(a)." This is **not** a final agency action within the meaning of 5 U.S.C.§ 704.

The application became abandoned for failure to timely pay the issue and publication on or before June 8, 2009 in reply to the Notice of Allowance mailed March 6, 2009.

A grantable petition under 37 CFR 1.137(a) must be accompanied by: (1) the required reply, unless previously filed; (2) the petition fee as set forth in 37 CFR 1.17(l); (3) a showing to the satisfaction of the Director that the entire delay in filing the required reply from the due date for the reply until the filing of a grantable petition pursuant to 37 CFR 1.137(a) was unavoidable; and (4) any terminal disclaimer (and fee as set forth in 37 CFR 1.20(d)) required pursuant to 37 CFR 1.137(d). The instant petition lacks item (3).

Petitioner states that, "We decided to pay the issue fee and publication fee in this May since the 3-months deadline is on June 6, 2009. However, as a practitioner representing my client Patrick Lemke, I got emergency medical situation in May and was delivered to the local hospital (Huntington Hospital, in Long Island) for further treatment..." Petitioner further states that, "During my sickness, I could not contact my client timely and he has no idea how to do the related paperwork."

Petitioner asserts incapacitation as the cause of unavoidable delay. A showing of "unavoidable" delay based upon incapacitation must establish that petitioner's incapacitation was of such nature and degree as to render petitioner unable to conduct business (*e.g.*, correspond with the Office) during the period between May and June 8, 2009. Such a showing must be supported by a statement from petitioner's treating physician, and such statement must provide the nature and degree of petitioner's incapacitation during this above-mentioned period.

Petitioner/applicant is cautioned to avoid submitting personal information in documents filed in a patent application that may contribute to identity theft. Personal information such as social security numbers, bank account numbers, or credit card numbers (other than a check or credit card authorization form PTO-2038 submitted for payment purposes) is never required by the USPTO to support a petition or an application. If this type of personal information is included in documents submitted to the USPTO, petitioners/applicants should consider redacting such personal information from the documents before submitting them to the USPTO. Petitioner/applicant is advised that the record of a patent application is available to the public after publication of the application (unless a non-publication request in compliance with 37 CFR 1.213(a) is made in the application) or issuance of a patent. Furthermore, the record from an abandoned application may also be available to the public if the application is referenced in a published application or an issued patent (see 37 CFR 1.14). Checks and credit card authorization forms PTO-2038 submitted for payment purposes are not retained in the application file and therefore are not publicly available.

As to petitioner's statement that his client has no idea how to do the paperwork; petitioner is encouraged to note that his client could have called the, Inventors Assistance Center (IAC) by telephone at 800-786-9199 or 571-272-1000, Monday through Friday from 8:30 AM to 5:30 PM (EST). The IAC provides patent information and services to the public and is staffed by former Supervisory Patent Examiners and experienced Primary Examiners who answer general questions concerning patent examining policy and procedure.

Decisions on reviving abandoned applications on the basis of "unavoidable" delay have adopted the reasonably prudent person standard in determining if the delay was unavoidable:

> The word 'unavoidable' . . . is applicable to ordinary human affairs, and requires no more or greater care or diligence than is generally used and observed by prudent and careful men in relation to their most important business. It permits them in the exercise of this care to rely upon the ordinary and trustworthy agencies of mail and telegraph, worthy and reliable employees, and such other means and instrumentalities as are usually employed in such important business. If unexpectedly, or through the unforeseen fault or imperfection of these agencies and instrumentalities, there occurs a failure, it may properly be said to be unavoidable, all other conditions of promptness in its rectification being present.

In re Mattullath, 38 App. D.C. 497, 514-15 (1912)(quoting Ex parte Pratt, 1887 Dec. Comm'r Pat. 31, 32-33 (1887)); see also Winkler v. Ladd, 221 F. Supp. 550, 552, 138 USPQ 666, 167-68 (D.D.C. 1963), aff'd, 143 USPQ 172 (D.C. Cir. 1963); Ex parte Henrich, 1913 Dec. Comm'r Pat. 139, 141 (1913). In addition, decisions on revival are made on a "case-by-case basis, taking all the facts and circumstances into account." Smith v. Mossinghoff, 671 F.2d 533, 538, 213 USPQ 977, 982 (D.C. Cir. 1982). Finally, a petition cannot be granted where a petitioner has failed to meet his or her burden of establishing that the delay was "unavoidable." Haines v. Quigg, 673 F. Supp. 314, 316-17, 5 USPQ2d 1130, 1131-32 (N.D. Ind. 1987).

Regrettably, the showing of record is not sufficient to establish to the satisfaction of the Director that the delay was unavoidable within the meaning of 35 U.S.C. § 1.33 and 37 CFR 1.137(a).

If petitioner cannot provide the evidence necessary to establish unavoidable delay, or simply does not wish to, petitioner may wish to consider filing a petition stating that the delay was unintentional. Public Law 97-247, § 3, 96 Stat. 317 (1982), which revised patent and trademark fees, amended 35 U.S.C. § 41(a)(7) to provide for the revival of an "unintentionally" abandoned application without a showing that the delay in prosecution or in late payment of the issue fee was "unavoidable." This amendment to 35 U.S.C. § 41(a)(7) has been implemented in 37 CFR 1.137(b). An "unintentional" petition under 37 CFR 1.137(b) must be accompanied by the $1,620.00 petition fee or $810.00 at the small entity rate.

The filing of a petition under 37 CFR 1.137(b) cannot be intentionally delayed and therefore must be filed promptly. A person seeking revival due to unintentional delay cannot make a statement that the delay was unintentional unless the entire delay, including the date it was discovered that the application was abandoned until the filing of the petition to revive under 37 CFR 1.137(b), was unintentional. A statement that the delay was unintentional is not appropriate if petitioner intentionally delayed the filing of a petition for revival under 37 CFR 1.137(b).

Further correspondence with respect to this matter should be delivered through one of the following mediums:

By mail:	Mail Stop PETITIONS Commissioner for Patents Post Office Box 1450 Alexandria, VA 22313-1450
By hand:	Customer Service Window Mail Stop Petitions Randolph Building 401 Dulany Street Alexandria, VA 22314
By fax:	(571) 273-8300 ATTN: Office of Petitions
By internet:	EFS-Web www.uspto.gov/ebc/efs_help.html (for help using EFS-Web call the Patent Electronic Business Center at (866) 217-9197)

Any questions concerning this matter may be directed to the undersigned at (571) 272-3208.

/KOC/
Karen Creasy
Petitions Examiner
Office of Petitions

UNITED STATES PATENT AND TRADEMARK OFFICE

Commissioner for Patents
United States Patent and Trademark Office
P.O. Box 1450
Alexandria, VA 22313-1450
www.uspto.gov

LIMIN WEN
NICHOLS BUILDING 1ST FLOOR
ONE BUNGTOWN ROAD
COLD SPRING HARBOR NY 11724

COPY MAILED

DEC 15 2009

OFFICE OF PETITIONS

In re Application of	:	
Patrick Timothy Lemke	:	
Application No. 11/801,435	:	DECISION ON PETITION
Filed: May 10, 2007	:	
Attorney Docket No. LEMKE01	:	
	:	

This is a decision on the renewed petition under the unavoidable provisions of 37 CFR 1.137(a), filed October 13, 2009, to revive the above-identified application.

The petition is **DISMISSED.**

Any further petition to revive must be submitted within TWO (2) MONTHS from the mail date of this decision. Extensions of time under 37 CFR 1.136(a) are permitted. The reconsideration request should include a cover letter entitled "Renewed Petition under 37 CFR 1.137(a)." This is **not** a final agency action within the meaning of 5 U.S.C.§ 704.

The application became abandoned for failure to timely pay the issue and publication fees on or before June 8, 2009 in reply to the Notice of Allowance mailed March 6, 2009.

A grantable petition under 37 CFR 1.137(a) must be accompanied by: (1) the required reply, unless previously filed; (2) the petition fee as set forth in 37 CFR 1.17(l); (3) a showing to the satisfaction of the Director that the entire delay in filing the required reply from the due date for the reply until the filing of a grantable petition pursuant to 37 CFR 1.137(a) was unavoidable; and (4) any terminal disclaimer (and fee as set forth in 37 CFR 1.20(d)) required pursuant to 37 CFR 1.137(d). The instant petition lacks item (3).

Petitioner states that, "We decided to pay the issue fee and publication fee in this May since the 3-months deadline is on June 6, 2009. However, as a practitioner representing my client Patrick Lemke, I got emergency medical situation in May and was delivered to the local hospital (Huntington Hospital, in Long Island) for further treatment..." Petitioner further states that, "During my sickness, I could not contact my client timely and he has no idea how to do the related paperwork."

Petitioner asserts incapacitation as the cause of unavoidable delay. The Office is in receipt of the documentation submitted with the instant petition to show petitioner's incapacitation during a period from May 16, 2009 until May 25, 2009. However, the Office is requiring additional documentation, (i.e., letter from doctors) showing unavoidable delay from the period of **June 6, 2009**, until the filing of a grantable petition under the unavoidable standard. This would show the Office that the **entire delay** was unavoidable. Such a showing must be supported by a statement from petitioner's treating physician, and such statement must provide the nature and degree of petitioner's incapacitation during this above-mentioned period.

Petitioner/applicant is cautioned to avoid submitting personal information in documents filed in a patent application that may contribute to identity theft. Personal information such as social security numbers, bank account numbers, or credit card numbers (other than a check or credit card authorization form PTO-2038 submitted for payment purposes) is never required by the USPTO to support a petition or an application. If this type of personal information is included in documents submitted to the USPTO, petitioners/applicants should consider redacting such personal information from the documents before submitting them to the USPTO. Petitioner/applicant is advised that the record of a patent application is available to the public after publication of the application (unless a non-publication request in compliance with 37 CFR 1.213(a) is made in the application) or issuance of a patent. Furthermore, the record from an abandoned application may also be available to the public if the application is referenced in a published application or an issued patent (see 37 CFR 1.14). Checks and credit card authorization forms PTO-2038 submitted for payment purposes are not retained in the application file and therefore are not publicly available.

As such, the showing of record is not sufficient to establish to the satisfaction of the Director that the delay was unavoidable within the meaning of 35 U.S.C. § 1.33 and 37 CFR 1.137(a).

If petitioner cannot provide the evidence necessary to establish unavoidable delay, or simply does not wish to, petitioner may wish to consider filing a petition stating that the delay was unintentional. Public Law 97-247, § 3, 96 Stat. 317 (1982), which revised patent and trademark fees, amended 35 U.S.C. § 41(a)(7) to provide for the revival of an "unintentionally" abandoned

application without a showing that the delay in prosecution or in late payment of the issue fee was "unavoidable." This amendment to 35 U.S.C. § 41(a)(7) has been implemented in 37 CFR 1.137(b). An "unintentional" petition under 37 CFR 1.137(b) must be accompanied by the $1,620.00 petition fee or $810.00 at the small entity rate.

The filing of a petition under 37 CFR 1.137(b) cannot be intentionally delayed and therefore must be filed promptly. A person seeking revival due to unintentional delay cannot make a statement that the delay was unintentional unless the entire delay, including the date it was discovered that the application was abandoned until the filing of the petition to revive under 37 CFR 1.137(b), was unintentional. A statement that the delay was unintentional is not appropriate if petitioner intentionally delayed the filing of a petition for revival under 37 CFR 1.137(b).

Further correspondence with respect to this matter should be delivered through one of the following mediums:

By mail:	Mail Stop PETITIONS Commissioner for Patents Post Office Box 1450 Alexandria, VA 22313-1450
By hand:	Customer Service Window Mail Stop Petitions Randolph Building 401 Dulany Street Alexandria, VA 22314
By fax:	(571) 273-8300 ATTN: Office of Petitions
By internet:	EFS-Web www.uspto.gov/ebc/efs_help.html (for help using EFS-Web call the Patent Electronic Business Center at (866) 217-9197)

Any questions concerning this matter may be directed to the undersigned at (571) 272-3208.

/KOC/
Karen Creasy
Petitions Examiner
Office of Petitions

UNITED STATES PATENT AND TRADEMARK OFFICE

Commissioner for Patents
United States Patent and Trademark Office
P.O. Box 1450
Alexandria, VA 22313-1450
www.uspto.gov

LIMIN WEN
NICHOLS BUILDING 1ST FLOOR
ONE BUNGTOWN ROAD
COLD SPRING HARBOR NY 11724

COPY MAILED
MAR 09 2010

In re Application of	:	
Patrick Timothy Lemke	:	
Application No. 11/801,435	:	ON PETITION
Filed: May 10, 2007	:	
Attorney Docket No. LEMKE01	:	

This is a decision on the renewed petition under 37 CFR 1.137(a), filed February 16, 2010, and supplemented on February 17, 2010, to revive the above-identified application.

The petition is **GRANTED.**

The application became abandoned for failure to timely pay the issue and publication fees on or before June 8, 2009 in reply to the Notice of Allowance mailed March 6, 2009.

The petition satisfies the requirements of 37 CFR 1.137(a) in that petitioner has supplied (1) the required reply in the form of the issue and publication fees; (2) the petition fee of $270.00; and (3) a showing to the satisfaction of the Director that the entire delay was unavoidable.

This application is being referred to the Office of Data Management to be processed into a patent.

Telephone inquiries concerning this decision should be directed to the undersigned at (571) 272-3208.

/KOC/
Karen Creasy
Petitions Examiner
Office of Petitions

UNITED STATES PATENT AND TRADEMARK OFFICE

UNITED STATES DEPARTMENT OF COMMERCE
United States Patent and Trademark Office
Address: COMMISSIONER FOR PATENTS
P.O. Box 1450
Alexandria, Virginia 22313-1450
www.uspto.gov

ExxonMobil Chemical Company
Law Technology
P.O. Box 2149
Baytown, TX 77522-2149

Mail Date: 05/07/2010

Applicant	: James R. Lattner	: DECISION ON REQUEST FOR
Patent Number	: 7615578	: RECALCULATION of PATENT
Issue Date	: 11/10/2009	: TERM ADJUSTMENT IN VIEW
Application No	: 11/801,436	: OF WYETH AND NOTICE OF INTENT TO
Filed	: 05/10/2007	: ISSUE CERTIFICATE OF CORRECTION
		:

The Request for Recalculation is **GRANTED** to the extent indicated.

The patent term adjustment has been determined to be **302** days. The USPTO will *sua sponte* issue a certificate of correction reflecting the amount of PTA days determined by the recalculation.

Prior to the issuance of the certificate of correction, the USPTO will afford patentee an opportunity to be heard and request reconsideration. Accordingly, patentee has **one month or thirty (30) days**, whichever is longer, to file a request for reconsideration of this patent term adjustment calculation. See 35 U.S.C. 154(b)(3)(B)(ii) and 37 CFR 1.322(a)(4). No extensions of time will be granted under 37 CFR 1.136.

Patentee should use document code PET.OP if electronically filing a request for reconsideration of this patent term adjustment calculation. The patentee must also include the information required by 37 CFR 1.705(b)(2) and the fee required by 37 CFR 1.18(e). If patentee does not file a timely request for reconsideration of this patent term adjustment calculation including the information required by 37 CFR 1.705(b)(2) and the fee required by 37 CFR 1.18(e), the USPTO will issue a certificate of correction reflecting the PTA determination noted above.

Patentee should be aware that in order to preserve the right to review in the United States District Court for the District of Columbia of the USPTO patent term adjustment determination, patentee must ensure that he or she also take the steps required under 35 U.S.C. 154(b)(4)(A) in a timely manner. Nothing in the request for recalculation should be construed as providing an alternative time frame for commencing a civil action under 35 U.S.C. 154(b)(4)(A).

Any questions concerning this decision should be directed to the Office of Patent Legal Administration at 571-272-7702.

UNITED STATES PATENT AND TRADEMARK OFFICE

Commissioner for Patents
United States Patent and Trademark Office
P.O. Box 1450
Alexandria, VA 22313-1450
www.uspto.gov

FLORIN CORIE
STATTLER JOHANSEN & ADELI LLP
SUITE 480
60 SOUTH MARKET STREET
SAN JOSE, CA 95113

COPY MAILED

AUG 15 2008

In re Application of	:	
Charles D. Jenkins	:	
Application No. 11/801,454	:	ON PETITION
Filed: May 9, 2007	:	
Attorney Docket No. SYST.P0002	:	

This is a decision on the petition under 37 CFR 1.137(b), filed April 23, 2008, to revive the above-identified application.

The petition is **GRANTED.**

The above-identified application became abandoned for failure to reply in a timely manner to the Notice to File Corrected Application Papers (Notice) mailed July 12, 2007. The Notice set a period for reply of two (2) months from the mail date of the Notice. No extension of time under the provisions of 37 CFR 1.136(a) were obtained. Accordingly, the above-identified application became abandoned on September 13, 2007.

Telephone inquiries concerning this decision should be directed to Irvin Dingle at (571) 272-3210.

This matter is being referred to the Office of Patent Application Processing.

Irvin Dingle
Petitions Examiner
Office of Petitions

UNITED STATES PATENT AND TRADEMARK OFFICE

Commissioner for Patents
United States Patent and Trademark Office
P.O. Box 1450
Alexandria, VA 22313-1450
www.uspto.gov

MARK S. HUBERT P.C.
516 SE MORRISON- SUITE 1200
PORTLAND OR 97214

COPY MAILED

OCT 2 0 2008

OFFICE OF PETITIONS

In re Application of

YANG, Sung
Application No. 11/801,458
Filed: May 09, 2007
Attorney Docket No.

DECISION ON PETITION
TO WITHDRAW
FROM RECORD

This is a decision on the Request to Withdraw as attorney or agent of record under 37 C.F.R. § 1.36(b), filed July 23, 2008.

The request is **APPROVED**.

A grantable request to withdraw as attorney/agent of record must be signed by every attorney/agent seeking to withdraw or contain a clear indication that one attorney is signing on behalf of another/others. The Office requires the practitioner(s) requesting withdrawal to certify that he, she, or they have: (1) given reasonable notice to the client, prior to the expiration of the response period, that the practitioner(s) intends to withdraw from employment; (2) delivered to the client or a duly authorized representative of the client all papers and property (including funds) to which the client is entitled; and (3) notified the client of any responses that may be due and the time frame within which the client must respond, pursuant 37 CFR 10.40(c).

The request was signed by Sung Yang on behalf of all attorneys of record who are associated with customer No. 32211. All attorneys/agents associated have been withdrawn. Applicant is reminded that there is no attorney of record at this time.

All future correspondence will be directed to the first named inventor Mark S. Hubert at the address indicated below..

There are no outstanding office actions at this time.

Telephone inquiries concerning this decision should be directed to Michelle R. Eason at 571-272-4231.

Michelle R. Eason
Paralegal Specialist
Office of Petitions

cc: **SUNG YANG**
3265 EAST 6TH AVE
VANCOUVER, BC
V5M 156
CANADA

UNITED STATES PATENT AND TRADEMARK OFFICE

Commissioner for Patents
United States Patent and Trademark Office
P.O. Box 1450
Alexandria, VA 22313-1450
www.uspto.gov

COPY MAILED

APR 2 4 2009

OFFICE OF PETITIONS

MARK S. HUBERT P.C.
516 SE MORRISON- SUITE 1200
PORTLAND OR 97214

In re Application of	:	
YANG, Sung	:	**CORRECTED**
Application No. 11/801,458	:	DECISION ON PETITION
Filed: May 09, 2007	:	TO WITHDRAW
Attorney Docket No.	:	FROM RECORD
	:	

This is a decision on the Request to Withdraw as attorney or agent of record under 37 C.F.R. § 1.36(b), filed July 23, 2008.

The request is **APPROVED**.

A grantable request to withdraw as attorney/agent of record must be signed by every attorney/agent seeking to withdraw or contain a clear indication that one attorney is signing on behalf of another/others. The Office requires the practitioner(s) requesting withdrawal to certify that he, she, or they have: (1) given reasonable notice to the client, prior to the expiration of the response period, that the practitioner(s) intends to withdraw from employment; (2) delivered to the client or a duly authorized representative of the client all papers and property (including funds) to which the client is entitled; and (3) notified the client of any responses that may be due and the time frame within which the client must respond, pursuant 37 CFR 10.40(c).

The request was signed by Mark S. Hubert on behalf of all attorneys of record who are associated with customer No. 32211. All attorneys/agents associated have been withdrawn. Applicant is reminded that there is no attorney of record at this time.

All future correspondence will be directed to the first named inventor Sung Yang at the address indicated below.

There are no outstanding office actions at this time.

Telephone inquiries concerning this decision should be directed to Michelle R. Eason at 571-272-4231.

Michelle R. Eason
Paralegal Specialist
Office of Petitions

cc: **SUNG YANG**
3265 EAST 6TH AVE
VANCOUVER, BC
V5M 156
CANADA

UNITED STATES PATENT AND TRADEMARK OFFICE

Commissioner for Patents
United States Patent and Trademark Office
P.O. Box 1450
Alexandria, VA 22313-1450
www.uspto.gov

COPY MAILED

JUN 19 2008

OFFICE OF PETITIONS

INTELLEVATE
P.O. BOX 52050
MINNEAPOLIS, MN 55402

In re Application of	:	
Lewis Adams	:	
Application No. 11/801,460	:	DECISION ON PETITION
Filed: Ma 9, 2007	:	TO WITHDRAW
Attorney Docket No. 00056.00007US1	:	FROM RECORD
	:	

This is a decision on the Request to Withdraw as attorney or agent of record under 37 C.F.R. § 1.36(b), filed December 6, 2007.

The request is **DISMISSED** as moot.

A review of the file record indicates that the power of attorney to Intellevate has been revoked by the assignee of the patent application on January 14, 2008. Accordingly, the request to withdraw under 37 C.F.R. § 1.36(b) is moot.

All future communications from the Office will continue to be directed to the below-listed address until otherwise notified by applicant.

Telephone inquires concerning this decision should be directed to undersigned at 571-272- 1642.

April M. Wise
Petitions Examiner
Office of Petitions

cc: GAINSPAN, INC.
440 N. WOLFE ROAD
SUNNYVALE, CA 94085

UNITED STATES PATENT AND TRADEMARK OFFICE

Commissioner for Patents
United States Patent and Trademark Office
P.O. Box 1450
Alexandria, VA 22313-1450
www.uspto.gov

FORTKORT & HOUSTON P.C.
9442 N. CAPITAL OF TEXAS HIGHWAY
ARBORETUM PLAZA ONE, SUITE 500
AUSTIN TX 78759

MAILED

JUL 09 2010

OFFICE OF PETITIONS

In re Application of	:	
Smalley, August R.	:	DECISION ON PETITION
Application No. 11/801,464	:	TO WITHDRAW
Filed: May 9, 2007	:	FROM RECORD
Attorney Docket No. SMLY001US0	:	

This is a decision on the Request to Withdraw as attorney or agent of record under 37 C.F.R. § 1.36(b), filed March 29, 2010.

The request is **APPROVED**.

A grantable request to withdraw as attorney/agent of record must be signed by every attorney/agent seeking to withdraw or contain a clear indication that one attorney is signing on behalf of another/others. The Office will require the practitioner(s) to certify that he, she or they have: (1) given reasonable notice to the client, prior to the expiration of the reply period, which the practitioner(s) intends to withdraw from employment; (2) delivered to the client or a duly authorized representative of the client all papers and property (including funds) to which the client is entitled; and (3) notified the client of any replies that may be due and the time frame within which the client must respond, pursuant to 37 CFR 10.40 (c).

The request was signed by John A. Fortkort on behalf of all attorneys/agents of record who are associated with Customer Number 58293. All attorneys/agents associated with Customer Number 58293 have been withdrawn. Applicant is reminded that there is no attorney of record at this time.

All future correspondence will be directed to the first-named inventor, August R. Smalley, at the address indicated below.

The instant application became abandoned for failure to timely respond to the non-final Office action mailed August 19, 2009.

Telephone inquires concerning this decision should be directed to the undersigned at (571) 272-3206. All other inquires concerning either the examination or status of the application should be directed to the Technology Center.

Liana Walsh
Petitions Examiner
Office of Petitions

cc: AUGUST R. SMALLEY
3016 WINDSOR ROAD, UNIT A
AUSTIN TX 78703

UNITED STATES PATENT AND TRADEMARK OFFICE

Commissioner for Patents
United States Patent and Trademark Office
P.O. Box 1450
Alexandria, VA 22313-1450
www.uspto.gov

DELPHI TECHNOLOGIES, INC.
M/C 480-410-202
PO BOX 5052
TROY, MI 48007

COPY MAILED

DEC 0 4 2009

OFFICE OF PETITIONS

In re Application of	:	ON PETITION
Juan I. Banzo	:	
Application No.: 11/801,500	:	
Filed: May 10, 2007	:	
Attorney Docket No.: DP-315815	:	

This is a decision on the petition, filed December 4, 2009, under 37 CFR 1.313(c)(2) to withdraw the above-identified application from issue after payment of the issue fee.

The petition is **GRANTED**.

The above-identified application is withdrawn from issue for consideration of a submission under 37 CFR 1.114 (request for continued examination). See 37 CFR 1.313(c)(2).

Petitioner is advised that the issue fee paid on November 24, 2009, cannot be refunded. If, however, this application is again allowed, petitioner may request that it be applied towards the issue fee required by the new Notice of Allowance.[1]

Telephone inquiries relating to this decision should be directed to the undersigned at (571) 272-3204.

The application is being referred to Technology Center AU 2835 for further processing of the request for continued examination under 37 CFR 1.114 and for consideration of the concurrently filed Information Disclosure Statement (IDS).

/SDB/

Sherry D. Brinkley
Petitions Examiner
Office of Petitions

---

[1] *The request to apply the issue fee to the new Notice may be satisfied by completing and returning the new Part B – Fee(s) Transmittal Form (along with any balance due at the time of submission). Petitioner is advised that the Issue Fee Transmittal Form* ***must*** *be completed and timely submitted to avoid abandonment of the application.*

UNITED STATES PATENT AND TRADEMARK OFFICE

COMMISSIONER FOR PATENTS
UNITED STATES PATENT AND TRADEMARK OFFICE
P.O. BOX 1450
ALEXANDRIA, VA 22313-1450
www.uspto.gov
DRW May-08

DUNLAP CODDING & ROGERS, P.C.
PO BOX 16370
OKLAHOMA CITY OK 73113

COPY MAILED

MAY 21 2008

OFFICE OF PETITIONS

In re Application of :
Houston E. Hill :
Application Number: 11/801511 :
Filing Date: 05/10/2007 :
Attorney Docket Number: :
3498.007 :

ON PETITION

This is a decision on the petition under 37 CFR 1.137(b)[1] filed on April 10, 2008.

The petition is **granted**.

This application became abandoned on December 25, 2007, for failure to timely submit a reply to the non-final Office action mailed on September 24, 2007, which set a three (3) month shortened statutory period for reply. No extensions of the time for reply in accordance with 37 CFR 1.136(a) were obtained. The filing of the present petition precedes the mailing of Notice of Abandonment.

Receipt of the amendment, including a terminal disclaimer under 37 CFR 1.321(c) to overcome a nonstatutory obviousness-type

---

[1] Effective December 1, 1997, the provisions of 37 CFR 1.137(b) now provide that where the delay in reply was unintentional, a petition may be filed to revive an abandoned application or a lapsed patent pursuant to 37 CFR 1.137(b). A grantable petition filed under the provisions of 37 CFR 1.137(b) must be accompanied by:

(1) the required reply, unless previously filed. In a nonprovisional application abandoned for failure to prosecute, the required reply may be met by the filing of a continuing application. In a nonprovisional application filed on or after June 8, 1995, and abandoned for failure to prosecute, the required reply may also be met by the filing of a request for continued examination in compliance with § 1.114. In an application or patent, abandoned or lapsed for failure to pay the issue fee or any portion thereof, the required reply must be the payment of the issue fee or any outstanding balance thereof. In an application abandoned for failure to pay the publication fee, the required reply must include payment of the publication fee.

(2) the petition fee as set forth in 37 CFR 1.17(m);

(3) a statement that the entire delay in filing the required reply from the due date for the reply until the filing of a grantable petition pursuant to 37 CFR 1.137(b) was unintentional. The Director may required additional information where there is a question whether the delay was unintentional; and

(4) any terminal disclaimer (and fee as set forth in 37 CFR 1.20(d)) required pursuant to 37 CFR 1.137(c)).

double patenting rejection, submitted with the present petition is acknowledged.

The application is being referred to Technology Center Art Unit 3643 for further processing.

Telephone inquiries related to this decision should be directed to the undersigned at 571-272-3231.

DWood

Douglas I. Wood
Senior Petitions Attorney
Office of Petitions

UNITED STATES PATENT AND TRADEMARK OFFICE

UNITED STATES DEPARTMENT OF COMMERCE
United States Patent and Trademark Office
Address: COMMISSIONER FOR PATENTS
P.O. Box 1450
Alexandria, Virginia 22313-1450
www.uspto.gov

APPLICATION NO.	FILING DATE	FIRST NAMED INVENTOR	ATTORNEY DOCKET NO.	CONFIRMATION NO.
11/801,558	05/10/2007	Tae-In Hyon	1235-257	3548

7590 01/12/2010

THE FARRELL LAW FIRM, LLP
290 Broadhollow Road
Suite 210E
Melville, NY 11747

EXAMINER
BHATTACHARYA, SAM

ART UNIT	PAPER NUMBER
2617	

MAIL DATE	DELIVERY MODE
01/12/2010	PAPER

DECISION GRANTING PETITION UNDER 37 CFR 1.138(d)

The declaration of express abandonment is recognized

This is in response to the petition under 37 CFR 1.138(d), requesting for a refund of any previously paid search fee and excess claims fee in the above-identified application.

The petition is granted.

The express abandonment is recognized. Any previously paid search fee and excess claims fee are hereby refunded.

Telephone inquiries should be directed to the Office of Data Management at (571) 272-4200.

Patent Publication Branch
Office of Data Management

Adjustment date: 01/13/2010 NFARMER
02 FC:1111 -500.00 CP
04 FC:1201 -200.00 CP

FORM PET651G (Rev. 08/07)

UNITED STATES PATENT AND TRADEMARK OFFICE

UNITED STATES DEPARTMENT OF COMMERCE
United States Patent and Trademark Office
Address: COMMISSIONER FOR PATENTS
P.O. Box 1450
Alexandria, Virginia 22313-1450
www.uspto.gov

APPLICATION NO.	FILING DATE	FIRST NAMED INVENTOR	ATTORNEY DOCKET NO.	CONFIRMATION NO.
11/801,571	05/10/2007	Hye-Jeong Kim	678-3212 (P15591)	3572

7590 10/19/2009
THE FARRELL LAW FIRM, LLP
290 Broadhollow Road
Suite 210E
Melville, NY 11747

EXAMINER
LOUIS JACQUES, JACQUES H

ART UNIT	PAPER NUMBER
2112	

MAIL DATE	DELIVERY MODE
10/19/2009	PAPER

DECISION GRANTING PETITION UNDER 37 CFR 1.138(d)

The declaration of express abandonment is recognized

This is in response to the petition under 37 CFR 1.138(d), requesting for a refund of any previously paid search fee and excess claims fee in the above-identified application.

The petition is granted.

The express abandonment is recognized. Any previously paid search fee and excess claims fee are hereby refunded.

Telephone inquiries should be directed to the Office of Data Management at (571) 272-4200.

Nimi Farmer

Patent Publication Branch
Office of Data Management

Repln. Ref: 10/19/2009 NFARMER 0016152600
DAA:504053 Name/Number:11801571
FC: 9204 $700.00 CR

Adjustment date: 10/19/2009 NFARMER
05/14/2007 NNGUYEN1 00000002 11801571
02 FC:1111 -500.00 OP
04 FC:1201 -200.00 OP

FORM PET651G (Rev. 08/07)

UNITED STATES PATENT AND TRADEMARK OFFICE

UNITED STATES DEPARTMENT OF COMMERCE
United States Patent and Trademark Office
Address: COMMISSIONER FOR PATENTS
P.O. Box 1450
Alexandria, Virginia 22313-1450
www.uspto.gov

GARDERE WYNNE SEWELL LLP
INTELLECTUAL PROPERTY SECTION
3000 THANKSGIVING TOWER
1601 ELM ST
DALLAS, TX 75201-4761

Mail Date: 04/21/2010

Applicant	: Hugo Gicquel	: DECISION ON REQUEST FOR
Patent Number	: 7615977	: RECALCULATION of PATENT
Issue Date	: 11/10/2009	: TERM ADJUSTMENT IN VIEW
Appliction No	: 11/801,580	: OF WYETH AND NOTICE OF INTENT TO
Filed	: 05/09/2007	: ISSUE CERTIFICATE OF CORRECTION
		:

The Request for Recalculation is **GRANTED** to the extent indicated.

The patent term adjustment has been determined to be **252** days. The USPTO will *sua sponte* issue a certificate of correction reflecting the amount of PTA days determined by the recalculation.

Prior to the issuance of the certificate of correction, the USPTO will afford patentee an opportunity to be heard and request reconsideration. Accordingly, patentee has **one month or thirty (30) days**, whichever is longer, to file a request for reconsideration of this patent term adjustment calculation. See 35 U.S.C. 154(b)(3)(B)(ii) and 37 CFR 1.322(a)(4). No extensions of time will be granted under 37 CFR 1.136.

Patentee should use document code PET.OP if electronically filing a request for reconsideration of this patent term adjustment calculation. The patentee must also include the information required by 37 CFR 1.705(b)(2) and the fee required by 37 CFR 1.18(e). If patentee does not file a timely request for reconsideration of this patent term adjustment calculation including the information required by 37 CFR 1.705(b)(2) and the fee required by 37 CFR 1.18(e), the USPTO will issue a certificate of correction reflecting the PTA determination noted above.

Patentee should be aware that in order to preserve the right to review in the United States District Court for the District of Columbia of the USPTO patent term adjustment determination, patentee must ensure that he or she also take the steps required under 35 U.S.C. 154(b)(4)(A) in a timely manner. Nothing in the request for recalculation should be construed as providing an alternative time frame for commencing a civil action under 35 U.S.C. 154(b)(4)(A).

Any questions concerning this decision should be directed to the Office of Patent Legal Administration at 571-272-7702.

UNITED STATES PATENT AND TRADEMARK OFFICE

Commissioner for Patents
United States Patent and Trademark Office
P.O. Box 1450
Alexandria, VA 22313-1450
www.uspto.gov

HSIAO-YUAN LI
SUITE B2
100 S. BOWSER ROAD
RICHARDSON TX 75081

COPY MAILED

OCT 01 2007

OFFICE OF PETITIONS

In re Application of

HSIAO-YUAN LI
Application No. 11/801,619
Filed: May 10, 2007
Attorney Docket No.

DECISION ON PETITION
TO MAKE SPECIAL UNDER
37 CFR 1.102(c)(2)

This is a decision on the petition under 37 CFR 1.102(c)(1), to make the above-identified application special based on applicant's age as set forth in M.P.E.P. § 708.02, Section IV and under 37 CFR 1.102(c)(2)(i) to make the above-identified application special based on environment in M.P.E.P. § 708.02, Section V, filed June 12, 2007.

The petition is **GRANTED**.

A grantable petition to make an application special under 37 CFR 1.102(c)(1) and MPEP § 708.02, Section IV: Applicant's Age must be accompanied by evidence showing that at least one of the applicants is 65 years of age, or more, such as a birth certificate or a statement by applicant. No fee is required

The instant petition includes a statement by Hsiao-Yuan Li, attesting to his age. Accordingly, the above-identified application has been accorded "special" status.

In view of the above petition being granted and the application being made special, the petition under 37 CFR 1.102(c)(2)(i), is **DIMISSED AS MOOT.**

Telephone inquiries concerning this decision should be directed to Tredelle Jackson at 572-272-2783.

All other inquiries concerning either the examination or status of the application should be directed to the Technology Center.

The application is being forwarded to the Technology Center Art Unit 1754 for action on the merits commensurate with this decision.

Monica A. Graves
Petitions Examiner
Office of Petitions

G. Byron Stover
USDA, ARS, OTT
5601 Sunnyside Ave.
RM 4-1159
Beltsville, MD 20705

In re application of
Applicant: Thomas Tworkoski et al.
Serial No.:11/801622

Petition Filed: May 10, 2007
Attorney Docket No.: 19.04

Petition Decision

A review of the application record indicates that the petition meet all of the requirements for acceptance of color drawings.

The petition is accepted.

Any inquiry concerning this communication or earlier communications from the examiner should be directed to DANIELLE SULLIVAN whose telephone number is (571)270-3285. The examiner can normally be reached on 7:30 AM - 5:00 PM Mon-Thur EST.

If attempts to reach the examiner by telephone are unsuccessful, the examiner's supervisor, Johann Richter can be reached on (571) 272-0646. The fax phone number for the organization where this application or proceeding is assigned is 571-273-8300.

Information regarding the status of an application may be obtained from the Patent Application Information Retrieval (PAIR) system. Status information for published applications may be obtained from either Private PAIR or Public PAIR. Status information for unpublished applications is available through Private PAIR only. For more information about the PAIR system, see http://pair-direct.uspto.gov. Should you have questions on access to the Private PAIR system, contact the Electronic Business Center (EBC) at 866-217-9197 (toll-free). If you would like assistance from a USPTO Customer Service Representative or access to the automated information system, call 800-786-9199 (IN USA OR CANADA) or 571-272-1000.

Danielle Sullivan
Patent Examiner
Art Unit 1616

/SREENI PADMANABHAN/
Supervisory Patent Examiner, Art Unit 1627

UNITED STATES PATENT AND TRADEMARK OFFICE

Commissioner for Patents
United States Patent and Trademark Office
P.O. Box 1450
Alexandria, VA 22313-1450
www.uspto.gov

8/22/07

CHRISTOPHER & WEISBERG, P.A.
200 EAST LAS OLAS BOULEVARD
SUITE 2040
FORT LAUDERDALE FL 33301

In re Application of	:	
MATSUMURA, NOBUHISA	:	DECISION ON REQUEST TO
Application No. 11/801,631	:	PARTICIPATE IN PATENT
Filed: May 10, 2007	:	PROSECUTION HIGHWAY
Attorney Docket No. 1346-4U	:	PILOT PROGRAM AND PETITION
For: Training Device for Blood Vessel	:	TO MAKE SPECIAL UNDER
Surgery	:	37 CFR 1.102(d)

This is a decision on the request to participate in the Patent Prosecution Highway (PPH) pilot program under 37 CFR 1.102(d), filed May. 29, 2007, to make the above-identified application special.

The request and petition are **GRANTED**.

A grantable request to participate in the PPH pilot program and petition to make special require:

(1) The U.S. application must validly claim priority under 35 U.S.C. 119(a) to one or more applications filed in the JPO;
(2) Applicant must submit a copy of the allowable/patentable claim(s) from the JPO application(s) along with an English translation thereof and a statement that the English translation is accurate;
(3) All the claims in the U.S. application must sufficiently correspond or be amended to sufficiently correspond to the allowable/patentable claim(s) in the JPO application(s);
(4) Examination of the U.S. application has not begun;
(5) Applicant must submit a copy of all the office actions from each of the JPO application(s) containing the allowable/patentable claim(s) along with an English translation thereof and a statement that the English translation is accurate;
(6) Applicant must submit an IDS listing the documents cited by the JPO examiner in the JPO office action along with copies of documents except U.S. patents or U.S. patent application publications; and
(7) The required petition fee under 37 CFR 1.17(h).

The request to participate in the PPH pilot program and petition comply with the above requirements. Receipt of the IDS and a copy of Japanese patent publications are acknowledged. Accordingly, the above-identified application has been accorded "special" status.

Telephone inquiries concerning this decision should be directed to Henry C. Yuen, at 571-272-4856.

All other inquiries concerning the examination or status of the application should be directed to Xuan Thai, SPE of Art Unit 3714, 571-272-7147.

The application is being forwarded to the examiner for action on the merits commensurate with this decision.

Henry C. Yuen, Special Programs Examiner
Technology Center 3700 – Mechanical Engineering,
Manufacturing and Products
571-272-4856

UNITED STATES PATENT AND TRADEMARK OFFICE

Commissioner for Patents
United States Patent and Trademark Office
P.O. Box 1450
Alexandria, VA 22313-1450
www.uspto.gov

BRYAN CAVE LLP
211 NORTH BROADWAY
SUITE 3600
ST. LOUIS MO 63102-2750

COPY MAILED
AUG 1 1 2008

In re Application of	:	
Floyd Taub, et al.	:	
Application No. 11/801,632	:	DECISION ON PETITION
Filed: May 10, 2007	:	TO WITHDRAW
Attorney Docket No. C046216/0135918	:	FROM RECORD

This is a decision on the Request to Withdraw as attorney or agent of record under 37 C.F.R. § 1.36(b), filed April 10, 2008.

The request is **NOT APPROVED**.

A grantable request to withdraw as attorney/agent of record must be signed by every attorney/agent seeking to withdraw or contain a clear indication that one attorney is signing on behalf of another/others. A request to withdraw will not be approved unless at least 30 (thirty) days would remain between the date of approval and the later of the expiration date of a time to file a response or the expiration date of the maximum time period which can be extended under 37 C.F.R. § 1.136(a).

The Office cannot approve the request at this time since the reasons provided do not meet any of the conditions under the mandatory or permissive categories enumerated in 37 CFR 10.40. Section 10.40 of Title 37 of the Code of Federal Regulation states, "[a] practitioner shall not withdraw from employment in a proceeding before the Office without permission from the Office[.]" More specifically, 37 CFR 10.40 states, "[i]f paragraph (b) of this section is not applicable, a practitioner may not request permission to withdraw in matter pending before the Office unless such request or such withdrawal is" for one the permissive reasons listed in 37 CFR 10.40(c). The reasons set forth in the request, ***our client is no longer contractually responsible for the prosecution and/or maintenance of this application***, do not meet any the conditions set forth in 37 CFR 10.40.

All future communications from the Office will continue to be directed to the above-listed address until otherwise notified by applicant.

Telephone inquiries concerning this decision should be directed to Terri Williams at 571-272- 2991.

Terri Williams
Petitions Examiner
Office of Petitions

cc: **Floyd E. Taub, M.D.**
10616 Mantz Road
Silver Spring, MD 20903-1228

UNITED STATES PATENT AND TRADEMARK OFFICE

Commissioner for Patents
United States Patent and Trademark Office
P.O. Box 1450
Alexandria, VA 22313-1450
www.uspto.gov

BRYAN CAVE LLP
211 North Broadway
Suite 3600
St. Louis, MO 63102-2750

MAILED

APR 02 2010

OFFICE OF PETITIONS

In re Application of	:	
Floyd Taub, et al.	:	
Application No. 11/801,632	:	DECISION ON PETITION
Filed: May 10, 2007	:	TO WITHDRAW
Attorney Docket No. C046216/0135918	:	FROM RECORD
	:	

This is a decision on the renewed Request to Withdraw as attorney or agent of record under 37 C.F.R. § 1.36(b), filed March 11, 2010.

The request is **APPROVED**.

A grantable request to withdraw as attorney/agent of record must be signed by every attorney/agent seeking to withdraw or contain a clear indication that one attorney is signing on behalf of another/others. A request to withdraw will not be approved unless at least 30 (thirty) days would remain between the date of approval and the later of the expiration date of a time to file a response or the expiration date of the maximum time period which can be extended under 37 C.F.R. § 1.136(a).

The request was signed by Lucinda Althauser on behalf of all attorneys of record. All attorneys/agents have been withdrawn. Applicant is reminded that there is no attorney of record at this time.

All future correspondence will be directed to the first named inventor Joe Smith at the address indicated below.

Telephone inquiries concerning this decision should be directed to Terri Johnson at 571-272-2991.

Terri Johnson
Petitions Examiner
Office of Petitions

cc: **Floyd Taub, MD**
10616 Mantz Road
Silver Spring, MD 20903

UNITED STATES PATENT AND TRADEMARK OFFICE

UNITED STATES DEPARTMENT OF COMMERCE
United States Patent and Trademark Office
Address: COMMISSIONER FOR PATENTS
P.O. Box 1450
Alexandria, Virginia 22313-1450
www.uspto.gov

APPLICATION NUMBER	FILING OR 371(C) DATE	FIRST NAMED APPLICANT	ATTY. DOCKET NO./TITLE
11/801,632	05/10/2007	Floyd Taub	C046216/0135918

CONFIRMATION NO. 3159

POWER OF ATTORNEY NOTICE

49328
BRYAN CAVE LLP
211 NORTH BROADWAY
SUITE 3600
ST. LOUIS, MO 63102-2750

OC000000040931124

Date Mailed: 04/01/2010

NOTICE REGARDING CHANGE OF POWER OF ATTORNEY

This is in response to the Power of Attorney filed 03/11/2010.

- The withdrawal as attorney in this application has been accepted. Future correspondence will be mailed to the new address of record. 37 CFR 1.33.

/tsjohnson/

Office of Data Management, Application Assistance Unit (571) 272-4000, or (571) 272-4200, or 1-888-786-0101

UNITED STATES PATENT AND TRADEMARK OFFICE

UNITED STATES DEPARTMENT OF COMMERCE
United States Patent and Trademark Office
Address: COMMISSIONER FOR PATENTS
P.O. Box 1450
Alexandria, Virginia 22313-1450
www.uspto.gov

APPLICATION NO.	FILING DATE	FIRST NAMED INVENTOR	ATTORNEY DOCKET NO.	CONFIRMATION NO.
11/801,639	05/10/2007	Thomas Seeger	1243.001.1	4541

7590 04/08/2008
MELVIN K. SILVERMAN AND ASSOCS PC
500 WEST CYPRESS CREEK ROAD
SUITE 350
FT. LAUDERDALE, FL 33309

EXAMINER
DESAI, ANISH P

ART UNIT	PAPER NUMBER
1794	

MAIL DATE	DELIVERY MODE
04/08/2008	PAPER

DECISION GRANTING PETITION UNDER 37 CFR 1.138(d)

The declaration of express abandonment is recognized

This is in response to the petition under 37 CFR 1.138(d), requesting for a refund of any previously paid search fee and excess claims fee in the above-identified application.

The petition is granted.

The express abandonment is recognized. Any previously paid search fee and excess claims fee are hereby refunded.

Telephone inquiries should be directed to the Office of Data Management at (571) 272-4200.

Nioni Farmer

Patent Publication Branch
Office of Data Management

Adjustment date: 04/08/2008 KKING1
05/14/2007 MWOLDGE1 00000030 11801639
02 FC:1111 -500.00 OP

Repln. Ref: 04/08/2008 KKING1 0016505300
DA#:504530 Name/Number:11801639
FC: 9204 $500.00 CR

FORM PET651G (Rev. 08/07)

UNITED STATES PATENT AND TRADEMARK OFFICE

UNITED STATES DEPARTMENT OF COMMERCE
United States Patent and Trademark Office
Address: COMMISSIONER FOR PATENTS
P.O. Box 1450
Alexandria, Virginia 22313-1450
www.uspto.gov

CHA & REITER, LLC
210 ROUTE 4 EAST STE 103
PARAMUS, NJ 07652

Mail Date: 04/21/2010

Applicant	: Eun Seok Choi	: DECISION ON REQUEST FOR
Patent Number	: 7633836	: RECALCULATION of PATENT
Issue Date	: 12/15/2009	: TERM ADJUSTMENT IN VIEW
Appliction No	: 11/801,660	: OF WYETH AND NOTICE OF INTENT TO
Filed	: 05/10/2007	: ISSUE CERTIFICATE OF CORRECTION
		:

The Request for Recalculation is **GRANTED** to the extent indicated.

The patent term adjustment has been determined to be **17** days. The USPTO will *sua sponte* issue a certificate of correction reflecting the amount of PTA days determined by the recalculation.

Prior to the issuance of the certificate of correction, the USPTO will afford patentee an opportunity to be heard and request reconsideration. Accordingly, patentee has **one month or thirty (30) days**, whichever is longer, to file a request for reconsideration of this patent term adjustment calculation. See 35 U.S.C. 154(b)(3)(B)(ii) and 37 CFR 1.322(a)(4). No extensions of time will be granted under 37 CFR 1.136.

Patentee should use document code PET.OP if electronically filing a request for reconsideration of this patent term adjustment calculation. The patentee must also include the information required by 37 CFR 1.705(b)(2) and the fee required by 37 CFR 1.18(e). If patentee does not file a timely request for reconsideration of this patent term adjustment calculation including the information required by 37 CFR 1.705(b)(2) and the fee required by 37 CFR 1.18(e), the USPTO will issue a certificate of correction reflecting the PTA determination noted above.

Patentee should be aware that in order to preserve the right to review in the United States District Court for the District of Columbia of the USPTO patent term adjustment determination, patentee must ensure that he or she also take the steps required under 35 U.S.C. 154(b)(4)(A) in a timely manner. Nothing in the request for recalculation should be construed as providing an alternative time frame for commencing a civil action under 35 U.S.C. 154(b)(4)(A).

Any questions concerning this decision should be directed to the Office of Patent Legal Administration at 571-272-7702.

UNITED STATES PATENT AND TRADEMARK OFFICE

Commissioner for Patents
United States Patent and Trademark Office
P.O. Box 1450
Alexandria, VA 22313-1450
www.uspto.gov

FELDMAN LAW GROUP PC
12 E. 41ST STREET
NEW YORK, NY 10017

COPY MAILED
JUN 0 5 2008
OFFICE OF PETITIONS

In re Application of :
Aaron KNOLL et al. :
Application No. 11/801,668 : DECISION ON PETITION
Filed: May 10, 2007 :
Attorney Docket No. **182.01** :

This is a decision on the petition under the unintentional provisions of 37 CFR 1.137(b), filed April 17, 2008, to revive the above-identified application.

The petition is **GRANTED**.

The above-identified application became abandoned for failure to reply in a timely manner to the Notice to File Missing Parts of Nonprovisional Application mailed June 08, 2007. The Notice set a period for reply of two (2) months from the mail date of the Notice. No extensions of time under the provisions of 37 CFR 1.136(a) were obtained. Accordingly, the application became abandoned on August 09, 2007.

The petition satisfies the conditions for revival pursuant to the provisions of 37 CFR 1.137(b) in that (1) the reply in the form of the required fees and oath or declaration and preliminary amendment; (2) the petition fee of $770.00; and (3) the required statement of unintentional delay have been received. Accordingly, the reply to the Notice to File Missing Parts of Nonprovisional Application of June 08, 2007 is accepted as having been unintentionally delayed.

The power of attorney filed by the inventors with the petition on April 17, 2008 has been accepted and made of record.

Telephone inquiries concerning this decision should be directed to the undersigned at (571) 272-4231.

The application is being referred to the Office of Patent Application Processing.

Michelle R. Eason
Paralegal Specialist
Office of Petitions

UNITED STATES PATENT AND TRADEMARK OFFICE

Commissioner for Patents
United States Patent and Trademark Office
P.O. Box 1450
Alexandria, VA 22313-1450
www.uspto.gov

STEPHEN E. FELDMAN
7TH FL
12 E. 41ST STREET
NEW YORK, NY 10017

COPY MAILED

JUN 11 2008

OFFICE OF PETITIONS

ON PETITION

In re Application of	:
Yeung Ken	:
Application No. 11/801,669	:
Filed: May 10, 2007	:
Attorney Docket No. 136.71	:

This is a decision on the petition under 37 CFR 1.137(b), filed March 17, 2008, to revive the above-identified application.

The petition is **GRANTED.**

The above-identified application became abandoned for failure to reply in a timely manner to the Notice to File Missing Parts of Nonprovisional Application (Notice) mailed June 8, 2007. The Notice set a period for reply of two (2) months from the mail date of the Notice. No extension of time under the provisions of 37 CFR 1.136(a) were obtained. Accordingly, the above-identified application became abandoned on August 9, 2007.

Telephone inquiries concerning this decision should be directed to Irvin Dingle at (571) 272-3210.

This matter is being referred to the Office of Patent Application Processing.

Irvin Dingle
Petitions Examiner
Office of Petitions

UNITED STATES PATENT AND TRADEMARK OFFICE

Commissioner for Patents
United States Patent and Trademark Office
P.O. Box 1450
Alexandria, VA 22313-1450
www.uspto.gov

COPY MAILED
AUG 29 2008

JONES DAY
29TH FLOOR, EDINBURGH TOWER, THE LANDMARK,
15 QUEEN'S ROAD, CENTRAL
HONG KONG CN CHINA

In re Application of :
Hin Shing Ken Yeung :
Application No. 11/801,669 : ON PETITION
Filed: May 10, 2007 :
Attorney Docket No. 247405-999009

This is a decision on the petition filed July 28, 2008, under 37 CFR 1.182 to change the name of the sole inventor cited on this application in USPTO records.

The petition is granted.

The name of the sole inventor for the above-cited application is changed to "Hin Shing Ken Yeung."

A corrected filing receipt is enclosed.

The address cited on the petition differs from the address of record. Although a courtesy copy of this decision is being mailed to the address cited on the petition, all future correspondence will be mailed solely to the address of record until appropriate written instructions to the contrary are received.

The application file is being directed to the Office of Patent Application Processing for further review.

Telephone inquiries concerning this matter may be directed to the undersigned at (571) 272-3222.

Kenya A. McLaughlin
Petitions Attorney
Office of Petitions

Enclosure: Corrected Filing Receipt

cc:
Hin Shing Ken Yeung
Suites 4-7, 9/F, Tower 1, CHINA
Hong Kong City, 33 Canton
Road, Tsim Sha Tsui
Kowloon, HONG KONG

UNITED STATES PATENT AND TRADEMARK OFFICE

UNITED STATES DEPARTMENT OF COMMERCE
United States Patent and Trademark Office
Address: COMMISSIONER FOR PATENTS
P.O. Box 1450
Alexandria, Virginia 22313-1450
www.uspto.gov

APPLICATION NUMBER	FILING or 371(c) DATE	GRP ART UNIT	FIL FEE REC'D	ATTY.DOCKET.NO	TOT CLAIMS	IND CLAIMS
11/801,669	05/10/2007	2856	570	247405-999009	8	1

CONFIRMATION NO. 5997

CORRECTED FILING RECEIPT

OC000000031831055

64944
JONES DAY
29TH FLOOR, EDINBURGH TOWER, THE LANDMARK,
15 QUEEN'S ROAD, CENTRAL
HONG KONG,
CHINA

Date Mailed: 08/29/2008

Receipt is acknowledged of this non-provisional patent application. The application will be taken up for examination in due course. Applicant will be notified as to the results of the examination. Any correspondence concerning the application must include the following identification information: the U.S. APPLICATION NUMBER, FILING DATE, NAME OF APPLICANT, and TITLE OF INVENTION. Fees transmitted by check or draft are subject to collection. Please verify the accuracy of the data presented on this receipt. **If an error is noted on this Filing Receipt, please submit a written request for a Filing Receipt Correction. Please provide a copy of this Filing Receipt with the changes noted thereon. If you received a "Notice to File Missing Parts" for this application, please submit any corrections to this Filing Receipt with your reply to the Notice. When the USPTO processes the reply to the Notice, the USPTO will generate another Filing Receipt incorporating the requested corrections**

Applicant(s)

Hin Shing Ken Yeung, Tseun Wan, HONG KONG;

Assignment For Published Patent Application

Sars Holdings International Limited

Power of Attorney: The patent practitioners associated with Customer Number 64944

Domestic Priority data as claimed by applicant

Foreign Applications

If Required, Foreign Filing License Granted: 06/07/2007

The country code and number of your priority application, to be used for filing abroad under the Paris Convention, is **US 11/801,669**

Projected Publication Date: 11/13/2008

Non-Publication Request: No

Early Publication Request: No
**** SMALL ENTITY ****

Title

Measuring device

Preliminary Class

073

PROTECTING YOUR INVENTION OUTSIDE THE UNITED STATES

Since the rights granted by a U.S. patent extend only throughout the territory of the United States and have no effect in a foreign country, an inventor who wishes patent protection in another country must apply for a patent in a specific country or in regional patent offices. Applicants may wish to consider the filing of an international application under the Patent Cooperation Treaty (PCT). An international (PCT) application generally has the same effect as a regular national patent application in each PCT-member country. The PCT process **simplifies** the filing of patent applications on the same invention in member countries, but **does not result** in a grant of "an international patent" and does not eliminate the need of applicants to file additional documents and fees in countries where patent protection is desired.

Almost every country has its own patent law, and a person desiring a patent in a particular country must make an application for patent in that country in accordance with its particular laws. Since the laws of many countries differ in various respects from the patent law of the United States, applicants are advised to seek guidance from specific foreign countries to ensure that patent rights are not lost prematurely.

Applicants also are advised that in the case of inventions made in the United States, the Director of the USPTO must issue a license before applicants can apply for a patent in a foreign country. The filing of a U.S. patent application serves as a request for a foreign filing license. The application's filing receipt contains further information and guidance as to the status of applicant's license for foreign filing.

Applicants may wish to consult the USPTO booklet, "General Information Concerning Patents" (specifically, the section entitled "Treaties and Foreign Patents") for more information on timeframes and deadlines for filing foreign patent applications. The guide is available either by contacting the USPTO Contact Center at 800-786-9199, or it can be viewed on the USPTO website at http://www.uspto.gov/web/offices/pac/doc/general/index.html.

For information on preventing theft of your intellectual property (patents, trademarks and copyrights), you may wish to consult the U.S. Government website, http://www.stopfakes.gov. Part of a Department of Commerce initiative, this website includes self-help "toolkits" giving innovators guidance on how to protect intellectual property in specific countries such as China, Korea and Mexico. For questions regarding patent enforcement issues, applicants may call the U.S. Government hotline at 1-866-999-HALT (1-866-999-4158).

LICENSE FOR FOREIGN FILING UNDER

Title 35, United States Code, Section 184

Title 37, Code of Federal Regulations, 5.11 & 5.15

GRANTED

The applicant has been granted a license under 35 U.S.C. 184, if the phrase "IF REQUIRED, FOREIGN FILING LICENSE GRANTED" followed by a date appears on this form. Such licenses are issued in all applications where the conditions for issuance of a license have been met, regardless of whether or not a license may be required as

set forth in 37 CFR 5.15. The scope and limitations of this license are set forth in 37 CFR 5.15(a) unless an earlier license has been issued under 37 CFR 5.15(b). The license is subject to revocation upon written notification. The date indicated is the effective date of the license, unless an earlier license of similar scope has been granted under 37 CFR 5.13 or 5.14.

This license is to be retained by the licensee and may be used at any time on or after the effective date thereof unless it is revoked. This license is automatically transferred to any related applications(s) filed under 37 CFR 1.53(d). This license is not retroactive.

The grant of a license does not in any way lessen the responsibility of a licensee for the security of the subject matter as imposed by any Government contract or the provisions of existing laws relating to espionage and the national security or the export of technical data. Licensees should apprise themselves of current regulations especially with respect to certain countries, of other agencies, particularly the Office of Defense Trade Controls, Department of State (with respect to Arms, Munitions and Implements of War (22 CFR 121-128)); the Bureau of Industry and Security, Department of Commerce (15 CFR parts 730-774); the Office of Foreign AssetsControl, Department of Treasury (31 CFR Parts 500+) and the Department of Energy.

NOT GRANTED

No license under 35 U.S.C. 184 has been granted at this time, if the phrase "IF REQUIRED, FOREIGN FILING LICENSE GRANTED" DOES NOT appear on this form. Applicant may still petition for a license under 37 CFR 5.12, if a license is desired before the expiration of 6 months from the filing date of the application. If 6 months has lapsed from the filing date of this application and the licensee has not received any indication of a secrecy order under 35 U.S.C. 181, the licensee may foreign file the application pursuant to 37 CFR 5.15(b).

UNITED STATES PATENT AND TRADEMARK OFFICE

Commissioner for Patents
United States Patent and Trademark Office
P.O. Box 1450
Alexandria, VA 22313-1450
www.uspto.gov

LERNER, DAVID, LITTENBERG,
KRUMHOLZ & MENTLIK
600 SOUTH AVENUE WEST
WESTFIELD NJ 07090

COPY MAILED

AUG 13 2007

OFFICE OF PETITIONS

In re Application of	:	
Martin	:	
Application No. 11/801,681	:	DECISION DISMISSING
Filed: May 10, 2007	:	PETITION
Attorney Docket No. POF 3.0-076	:	

This is a decision on the petition filed June 5, 2007 (certificate of mailing date June 1, 2007), requesting that the above-identified application be accorded a filing date of May 10, 2007.

A review of USPTO records reveals that the application papers entitled, "RFID TAG FOR CONDUCTIVE SURFACE," filed on May 10, 2007 for Philippe Martin were assigned application no. 11/801,681, **not application no. 11/801,693**, as was stamped on applicant's post card receipt. Application No. 11/801,681's filing date is May 10, 2007. A filing receipt listing the correct application number and filing date was mailed to the above-listed correspondence address on June 7, 2007.

In view of the above, the petition is **DISMISSED AS MOOT.**

This application file is being referred to the Office of Initial Patent Examination for further pre-examination processing.

Telephone inquiries relating to this decision should be directed to the undersigned at (571)272-3230. Telephone inquiries related to OIPE processing should be directed to their hotline at (571) 272-4100.

Shirene Willis Brantley
Senior Petitions Attorney
Office of Petitions

UNITED STATES PATENT AND TRADEMARK OFFICE

Commissioner for Patents
United States Patent and Trademark Office
P.O. Box 1450
Alexandria, VA 22313-1450
www.uspto.gov

Lawrence I. Wechsler
One Wooleys Lane
Great Neck NY 11023

COPY MAILED

JUN 26 2008

OFFICE OF PETITIONS

In re Application of	:	
Lawrence I. Wechsler	:	
Application No.: 11/801688	:	DECISION ON
Filing or 371(c) Date: 05/10/2007	:	PETITION
Attorney Docket Number: W1000-32	:	

This is a decision in response to the "Petition Requesting Withdrawal of Holding of Abandonment Under 37 CFR 1.181(a)," filed April 24, 2008.

This Petition is hereby granted.

The above-identified application became abandoned for failure to timely and properly reply to the Notice to File Missing Parts of Nonprovisional Application ("Notice"), mailed June 7, 2007. The Notice set a two (2) month period for reply. Extensions of time were available under 37 CFR 1.136(a). No reply having been received, the application became abandoned on August 8, 2007. A Notice of Abandonment was mailed February 19, 2008.

Applicant files the instant petition and asserts that a timely reply to the Office action was filed on September 7, 2007, including a one (1) month extension of time, using the certificate of mail procedures under 37 CFR 1.8. In support of this assertion, Applicant provides a copy of the reply. A review of the reply reveals that Applicant filed, inter alia, a "Missing Parts Transmittal Letter," that includes a Certificate of Mailing Under 37 CFR 1.8, dated September 7, 2007. The Certificate of Mailing is executed by Petitioner herein (37 CFR 1.8(b)(3)).

The file record does not include the originally submitted papers. Failure to receive correspondence which includes a certificate of mailing or certificate of facsimile transmission is addressed in 37 CFR 1.8(b), reproduced below:

> In the event that correspondence is considered timely filed by being mailed or transmitted in accordance with paragraph (a) of this section, but not received in the U.S. Patent and Trademark Office after a reasonable amount of time has elapsed from the time of mailing or transmitting of the correspondence, or after the application is held to be abandoned, or after the proceeding is dismissed or decided with prejudice, or the prosecution of a reexamination proceeding is terminated pursuant to § 1.550(d) or § 1.957(b) or limited pursuant to § 1.957(c), or a requester paper is refused consideration pursuant to §a), the

correspondence will be considered timely if the party who forwarded such correspondence:

(1)Informs the Office of the previous mailing or transmission of the correspondence promptly after becoming aware that the Office has no evidence of receipt of the correspondence;

(2)Supplies an additional copy of the previously mailed or transmitted correspondence and certificate; and

(3)Includes a statement that attests on a personal knowledge basis or to the satisfaction of the Director to the previous timely mailing, transmission or submission. If the correspondence was sent by facsimile transmission, a copy of the sending unit's report confirming transmission may be used to support this statement. If the correspondence was transmitted via the Office electronic filing system, a copy of an acknowledgment receipt generated by the Office electronic filing system confirming submission may be used to support this statement.

(c) The Office may require additional evidence to determine if the correspondence was timely filed.

Applicant has complied with the requirements of 37 CFR 1.8(b).

In view of the foregoing, the petition is granted. The holding of abandonment is hereby withdrawn.

The application will be referred to Technology Center Art Unit 3643 for processing of the Reply, and for continued examination in due course.

Telephone inquiries concerning this matter should be directed to the undersigned at (571) 272-3232.

Derek L. Woods
Attorney
Office of Petitions

UNITED STATES PATENT AND TRADEMARK OFFICE

Commissioner for Patents
United States Patent and Trademark Office
P.O. Box 1450
Alexandria, VA 22313-1450
www.uspto.gov

KALIKO & ASSOCIATES, L.L.C.
500 NORTH FRANKLIN TURNPIKE
RAMSEY, NJ 07446

COPY MAILED

DEC 15 2009

OFFICE OF PETITIONS

In re Application of	:	
Gallaher et al.	:	DECISION ON PETITION
Application No. 11/801,708	:	TO WITHDRAW
Filed: May 10, 2007	:	FROM RECORD
Attorney Docket No. SECUREVOTE	:	

This is a decision on the Request to Withdraw as attorney or agent of record under 37 C.F.R. § 1.36(b), filed October 22, 2009.

The request is **NOT APPROVED**.

The request was signed by Mr. Scott H. Kaliko on behalf of the practitioners of record associated with customer 39550; however, the request cannot be approved since the practitioners were not appointed by Customer Number. The practitioner(s) were appointed power of attorney individually, by Registration Number upon filing of the instant application. Therefore, the Request must reflect withdrawal of the associated practitioners in the same manner.

There are no outstanding Office actions that require a reply from the applicant.

Telephone inquires concerning this decision should be directed to the undersigned at (571) 272-6059. All other inquires concerning either the examination or status of the application should be directed to the Technology Center.

A. Kelley

Alicia Kelley
Petitions Examiner
Office of Petitions

UNITED STATES PATENT AND TRADEMARK OFFICE

Commissioner for Patents
United States Patent and Trademark Office
P.O. Box 1450
Alexandria, VA 22313-1450
www.uspto.gov

Winstead PC
P.O. Box 50784
Dallas, TX 75201

MAILED

JUL 08 2009

OFFICE OF PETITIONS

In re Application of	:	
Ramon D. Garcia, et al.	:	
Application No. 11/801,715	:	DECISION ON PETITION
Filed: May 10, 2007	:	TO WITHDRAW
Attorney Docket No. 47011-P001US	:	FROM RECORD
	:	

This is a decision on the Request to Withdraw as attorney or agent of record under 37 C.F.R. § 1.36(b), filed June 5, 2009.

The request is **APPROVED**.

A grantable request to withdraw as attorney/agent of record must be signed by every attorney/agent seeking to withdraw or contain a clear indication that one attorney is signing on behalf of another/others. A request to withdraw will not be approved unless at least 30 (thirty) days would remain between the date of approval and the later of the expiration date of a time to file a response or the expiration date of the maximum time period which can be extended under 37 C.F.R. § 1.136(a).

The request was signed by Ross T. Robinson on behalf of all attorneys of record. All attorneys/agents have been withdrawn. Applicant is reminded that there is no attorney of record at this time.

All future correspondence will be directed to the first named inventor Ramon D. Garcia, MD at the address indicated below.

Telephone inquiries concerning this decision should be directed to Terri Williams at 571-272-2991.

Terri Williams

Terri Williams
Petitions Examiner
Office of Petitions

cc: **Ramon D. Garcia, MD**
3410 Anthony Circle
Rowlett, TX 75088

cc: **Ramon D. Garcia, MD**
2046 Forest Lane, Suite 130
Garland, TX 75040

UNITED STATES PATENT AND TRADEMARK OFFICE

UNITED STATES DEPARTMENT OF COMMERCE
United States Patent and Trademark Office
Address: COMMISSIONER FOR PATENTS
P.O. Box 1450
Alexandria, Virginia 22313-1450
www.uspto.gov

APPLICATION NUMBER	FILING OR 371(C) DATE	FIRST NAMED APPLICANT	ATTY. DOCKET NO./TITLE
11/801,715	05/10/2007	Ramon D. Garcia	47011-P001US

CONFIRMATION NO. 4518

POWER OF ATTORNEY NOTICE

61060
WINSTEAD PC
P.O. BOX 50784
DALLAS, TX 75201

OC000000036814739

Date Mailed: 07/07/2009

NOTICE REGARDING CHANGE OF POWER OF ATTORNEY

This is in response to the Power of Attorney filed 06/05/2009.

- The withdrawal as attorney in this application has been accepted. Future correspondence will be mailed to the new address of record. 37 CFR 1.33.

/tswilliams/

Office of Data Management, Application Assistance Unit (571) 272-4000, or (571) 272-4200, or 1-888-786-0101

UNITED STATES PATENT AND TRADEMARK OFFICE

UNITED STATES DEPARTMENT OF COMMERCE
United States Patent and Trademark Office
Address: COMMISSIONER FOR PATENTS
P.O. Box 1450
Alexandria, Virginia 22313-1450
www.uspto.gov

TEXAS INSTRUMENTS INCORPORATED
P O BOX 655474, M/S 3999
DALLAS, TX 75265

Mail Date: 04/20/2010

Applicant	: Chih-Ming Hung	: DECISION ON REQUEST FOR
Patent Number	: 7583156	: RECALCULATION of PATENT
Issue Date	: 09/01/2009	: TERM ADJUSTMENT IN VIEW
Appliction No	: 11/801,716	: OF WYETH AND NOTICE OF INTENT TO
Filed	: 05/10/2007	: ISSUE CERTIFICATE OF CORRECTION
		:

The Request for Recalculation is **GRANTED** to the extent indicated.

The patent term adjustment has been determined to be **97** days. The USPTO will *sua sponte* issue a certificate of correction reflecting the amount of PTA days determined by the recalculation.

Prior to the issuance of the certificate of correction, the USPTO will afford patentee an opportunity to be heard and request reconsideration. Accordingly, patentee has **one month or thirty (30) days**, whichever is longer, to file a request for reconsideration of this patent term adjustment calculation. See 35 U.S.C. 154(b)(3)(B)(ii) and 37 CFR 1.322(a)(4). No extensions of time will be granted under 37 CFR 1.136.

Patentee should use document code PET.OP if electronically filing a request for reconsideration of this patent term adjustment calculation. The patentee must also include the information required by 37 CFR 1.705(b)(2) and the fee required by 37 CFR 1.18(e). If patentee does not file a timely request for reconsideration of this patent term adjustment calculation including the information required by 37 CFR 1.705(b)(2) and the fee required by 37 CFR 1.18(e), the USPTO will issue a certificate of correction reflecting the PTA determination noted above.

Patentee should be aware that in order to preserve the right to review in the United States District Court for the District of Columbia of the USPTO patent term adjustment determination, patentee must ensure that he or she also take the steps required under 35 U.S.C. 154(b)(4)(A) in a timely manner. Nothing in the request for recalculation should be construed as providing an alternative time frame for commencing a civil action under 35 U.S.C. 154(b)(4)(A).

Any questions concerning this decision should be directed to the Office of Patent Legal Administration at 571-272-7702.

UNITED STATES PATENT AND TRADEMARK OFFICE

Commissioner for Patents
United States Patent and Trademark Office
P.O. Box 1450
Alexandria, VA 22313-1450
www.uspto.gov

COPY MAILED

DEC 17 2009

OFFICE OF PETITIONS

ATER WYNNE LLP
1331 NW LOVEJOY ST./SUITE 900
PORTLAND OR 97209-2785

In re Application of	:	
Wimer, et al.	:	
Application No. 11/801,722	:	DECISION ON PETITION
Filed: 9 May, 2007	:	UNDER 37 C.F.R. 1.78(a)(6)
Attorney Docket No. 103512-0009	:	

This is a decision on the petition under 37 C.F.R. § 1.78(a)(3), filed on 17 September, 2009, to accept an unintentionally delayed claim under 35 U.S.C. §120 for benefit of priority to the prior-filed application set forth in the concurrently filed amendment.

The petition is **GRANTED.**

A petition for acceptance of a claim for late priority under 37 C.F.R. §1.78(a)(3) is only applicable to those applications filed on or after November 29, 2000 and after the expiration of the period specified in 37 C.F.R. §1.78(a)(2)(ii). In addition, the petition under 37 C.F.R. §1.78(a)(3) must be accompanied by:

(1) the reference required by 35 U.S.C. §120 and 37 C.F.R. §1.78(a)(2)(i) of the prior-filed application, unless previously submitted;

(2) the surcharge set forth in §1.17(t); and

(3) a statement that the entire delay between the date the claim was due under 37 C.F.R. §1.78(a)(2)(ii) and the date the claim was filed was unintentional. The Director may require additional where there is a question whether the delay was unintentional.

All the above requirements having been satisfied, the late claim for benefit of priority under 35 U.S.C. §120 is accepted as being unintentionally delayed.

The granting of the petition to accept the delayed benefit claim to the prior-filed applications under 37 C.F.R. § 1.78(a)(3) should not be construed as meaning that this application is entitled to the benefit of the filing date of the prior-filed applications. In order for this application to be entitled to the benefit of the prior-filed applications, all other requirements under 35 U.S.C. 35 U.S.C. §120 and 37 C.F.R. §1.78(a)(4) must be met. Similarly, the fact that the corrected Filing Receipt accompanying this decision on petition includes the prior-filed applications should not be construed as meaning that applicant is entitled to the claim for benefit of priority to the prior-filed applications noted thereon. Accordingly, the examiner will, in due course, consider this benefit claim and determine whether the application is entitled to the benefit of the earlier filing date.

A corrected Filing Receipt, which includes the priority claim to the prior-filed application, accompanies this decision on petition.

This application is being referred to Technology Center/AU 3738 for consideration by the Examiner of applicant's entitlement to claim benefit of priority under 35 U.S.C. §120 to the prior-filed applications.

Any questions concerning this decision on petition may be directed to John J. Gillon, Jr., attorney, at (571) 272-3214. All other inquiries concerning either the examination procedures or status of the application should be directed to the Technology Center.

Anthony Knight
Supervisor
Office of Petitions

ATTACHMENT : Corrected Filing Receipt

UNITED STATES PATENT AND TRADEMARK OFFICE

UNITED STATES DEPARTMENT OF COMMERCE
United States Patent and Trademark Office
Address: COMMISSIONER FOR PATENTS
P.O. Box 1450
Alexandria, Virginia 22313-1450
www.uspto.gov

APPLICATION NUMBER	FILING or 371(c) DATE	GRP ART UNIT	FIL FEE REC'D	ATTY.DOCKET.NO	TOT CLAIMS	IND CLAIMS
11/801,722	05/09/2007	3643	600	103512-0009	24	3

CONFIRMATION NO. 4511

CORRECTED FILING RECEIPT

35940
ATER WYNNE LLP
1331 NW Lovejoy St. Suite 900
PORTLAND, OR 97209-2785

OC000000039269903

Date Mailed: 12/16/2009

Receipt is acknowledged of this non-provisional patent application. The application will be taken up for examination in due course. Applicant will be notified as to the results of the examination. Any correspondence concerning the application must include the following identification information: the U.S. APPLICATION NUMBER, FILING DATE, NAME OF APPLICANT, and TITLE OF INVENTION. Fees transmitted by check or draft are subject to collection. Please verify the accuracy of the data presented on this receipt. **If an error is noted on this Filing Receipt, please submit a written request for a Filing Receipt Correction. Please provide a copy of this Filing Receipt with the changes noted thereon. If you received a "Notice to File Missing Parts" for this application, please submit any corrections to this Filing Receipt with your reply to the Notice. When the USPTO processes the reply to the Notice, the USPTO will generate another Filing Receipt incorporating the requested corrections**

Applicant(s)

Roger D. Wimer, Kelso, WA;
David N. Stearns, Canby, OR;

Assignment For Published Patent Application

IFA Nurseries, Inc.

Power of Attorney: The patent practitioners associated with Customer Number 35940

Domestic Priority data as claimed by applicant

Foreign Applications

If Required, Foreign Filing License Granted: 06/14/2007

The country code and number of your priority application, to be used for filing abroad under the Paris Convention, is **US 11/801,722**

Projected Publication Date: Not Applicable

Non-Publication Request: No

Early Publication Request: No
**** SMALL ENTITY ****

Title

Device for protecting container-grown seedling root systems and method for its manufacture

Preliminary Class

047

PROTECTING YOUR INVENTION OUTSIDE THE UNITED STATES

Since the rights granted by a U.S. patent extend only throughout the territory of the United States and have no effect in a foreign country, an inventor who wishes patent protection in another country must apply for a patent in a specific country or in regional patent offices. Applicants may wish to consider the filing of an international application under the Patent Cooperation Treaty (PCT). An international (PCT) application generally has the same effect as a regular national patent application in each PCT-member country. The PCT process **simplifies** the filing of patent applications on the same invention in member countries, but **does not result** in a grant of "an international patent" and does not eliminate the need of applicants to file additional documents and fees in countries where patent protection is desired.

Almost every country has its own patent law, and a person desiring a patent in a particular country must make an application for patent in that country in accordance with its particular laws. Since the laws of many countries differ in various respects from the patent law of the United States, applicants are advised to seek guidance from specific foreign countries to ensure that patent rights are not lost prematurely.

Applicants also are advised that in the case of inventions made in the United States, the Director of the USPTO must issue a license before applicants can apply for a patent in a foreign country. The filing of a U.S. patent application serves as a request for a foreign filing license. The application's filing receipt contains further information and guidance as to the status of applicant's license for foreign filing.

Applicants may wish to consult the USPTO booklet, "General Information Concerning Patents" (specifically, the section entitled "Treaties and Foreign Patents") for more information on timeframes and deadlines for filing foreign patent applications. The guide is available either by contacting the USPTO Contact Center at 800-786-9199, or it can be viewed on the USPTO website at http://www.uspto.gov/web/offices/pac/doc/general/index.html.

For information on preventing theft of your intellectual property (patents, trademarks and copyrights), you may wish to consult the U.S. Government website, http://www.stopfakes.gov. Part of a Department of Commerce initiative, this website includes self-help "toolkits" giving innovators guidance on how to protect intellectual property in specific countries such as China, Korea and Mexico. For questions regarding patent enforcement issues, applicants may call the U.S. Government hotline at 1-866-999-HALT (1-866-999-4158).

LICENSE FOR FOREIGN FILING UNDER

Title 35, United States Code, Section 184

Title 37, Code of Federal Regulations, 5.11 & 5.15

GRANTED

The applicant has been granted a license under 35 U.S.C. 184, if the phrase "IF REQUIRED, FOREIGN FILING LICENSE GRANTED" followed by a date appears on this form. Such licenses are issued in all applications where the conditions for issuance of a license have been met, regardless of whether or not a license may be required as

set forth in 37 CFR 5.15. The scope and limitations of this license are set forth in 37 CFR 5.15(a) unless an earlier license has been issued under 37 CFR 5.15(b). The license is subject to revocation upon written notification. The date indicated is the effective date of the license, unless an earlier license of similar scope has been granted under 37 CFR 5.13 or 5.14.

This license is to be retained by the licensee and may be used at any time on or after the effective date thereof unless it is revoked. This license is automatically transferred to any related applications(s) filed under 37 CFR 1.53(d). This license is not retroactive.

The grant of a license does not in any way lessen the responsibility of a licensee for the security of the subject matter as imposed by any Government contract or the provisions of existing laws relating to espionage and the national security or the export of technical data. Licensees should apprise themselves of current regulations especially with respect to certain countries, of other agencies, particularly the Office of Defense Trade Controls, Department of State (with respect to Arms, Munitions and Implements of War (22 CFR 121-128)); the Bureau of Industry and Security, Department of Commerce (15 CFR parts 730-774); the Office of Foreign AssetsControl, Department of Treasury (31 CFR Parts 500+) and the Department of Energy.

NOT GRANTED

No license under 35 U.S.C. 184 has been granted at this time, if the phrase "IF REQUIRED, FOREIGN FILING LICENSE GRANTED" DOES NOT appear on this form. Applicant may still petition for a license under 37 CFR 5.12, if a license is desired before the expiration of 6 months from the filing date of the application. If 6 months has lapsed from the filing date of this application and the licensee has not received any indication of a secrecy order under 35 U.S.C. 181, the licensee may foreign file the application pursuant to 37 CFR 5.15(b).

UNITED STATES PATENT AND TRADEMARK OFFICE

Commissioner for Patents
United States Patent and Trademark Office
P.O. Box 1450
Alexandria, VA 22313-1450
www.uspto.gov

ATER WYNNE LLP
1331 NW LOVEJOY ST./SUITE 900
PORTLAND OR 97209-2785

COPY MAILED

DEC 17 2009

OFFICE OF PETITIONS

In re Application of :
Wimer, et al. :
Application No. 11/801,722 : DECISION ON PETITION
Filed: 9 May, 2007 : UNDER 37 C.F.R. 1.78(a)(6)
Attorney Docket No. 103512-0009 :

This is a decision on the petition under 37 C.F.R. § 1.78(a)(3), filed on 17 September, 2009, to accept an unintentionally delayed claim under 35 U.S.C. §120 for benefit of priority to the prior-filed application set forth in the concurrently filed amendment.

The petition is **GRANTED.**

A petition for acceptance of a claim for late priority under 37 C.F.R. §1.78(a)(3) is only applicable to those applications filed on or after November 29, 2000 and after the expiration of the period specified in 37 C.F.R. §1.78(a)(2)(ii). In addition, the petition under 37 C.F.R. §1.78(a)(3) must be accompanied by:

(1) the reference required by 35 U.S.C. §120 and 37 C.F.R. §1.78(a)(2)(i) of the prior-filed application, unless previously submitted;

(2) the surcharge set forth in §1.17(t); and

(3) a statement that the entire delay between the date the claim was due under 37 C.F.R. §1.78(a)(2)(ii) and the date the claim was filed was unintentional. The Director may require additional where there is a question whether the delay was unintentional.

All the above requirements having been satisfied, the late claim for benefit of priority under 35 U.S.C. §120 is accepted as being unintentionally delayed.

The granting of the petition to accept the delayed benefit claim to the prior-filed applications under 37 C.F.R. § 1.78(a)(3) should not be construed as meaning that this application is entitled to the benefit of the filing date of the prior-filed applications. In order for this application to be entitled to the benefit of the prior-filed applications, all other requirements under 35 U.S.C. 35 U.S.C. §120 and 37 C.F.R. §1.78(a)(4) must be met. Similarly, the fact that the corrected Filing Receipt accompanying this decision on petition includes the prior-filed applications should not be construed as meaning that applicant is entitled to the claim for benefit of priority to the prior-filed applications noted thereon. Accordingly, the examiner will, in due course, consider this benefit claim and determine whether the application is entitled to the benefit of the earlier filing date.

A corrected Filing Receipt, which includes the priority claim to the prior-filed application, accompanies this decision on petition.

This application is being referred to Technology Center/AU 3738 for consideration by the Examiner of applicant's entitlement to claim benefit of priority under 35 U.S.C. §120 to the prior-filed applications.

Any questions concerning this decision on petition may be directed to John J. Gillon, Jr., attorney, at (571) 272-3214. All other inquiries concerning either the examination procedures or status of the application should be directed to the Technology Center.

Anthony Knight
Supervisor
Office of Petitions

ATTACHMENT : Corrected Filing Receipt

UNITED STATES PATENT AND TRADEMARK OFFICE

UNITED STATES DEPARTMENT OF COMMERCE
United States Patent and Trademark Office
Address: COMMISSIONER FOR PATENTS
P.O. Box 1450
Alexandria, Virginia 22313-1450
www.uspto.gov

APPLICATION NUMBER	FILING or 371(c) DATE	GRP ART UNIT	FIL FEE REC'D	ATTY.DOCKET.NO	TOT CLAIMS	IND CLAIMS
11/801,722	05/09/2007	3643	600	103512-0009	24	3

CONFIRMATION NO. 4511

REPLACEMENT FILING RECEIPT

35940
ATER WYNNE LLP
1331 NW Lovejoy St. Suite 900
PORTLAND, OR 97209-2785

OC000000039289104

Date Mailed: 12/17/2009

Receipt is acknowledged of this non-provisional patent application. The application will be taken up for examination in due course. Applicant will be notified as to the results of the examination. Any correspondence concerning the application must include the following identification information: the U.S. APPLICATION NUMBER, FILING DATE, NAME OF APPLICANT, and TITLE OF INVENTION. Fees transmitted by check or draft are subject to collection. Please verify the accuracy of the data presented on this receipt. **If an error is noted on this Filing Receipt, please submit a written request for a Filing Receipt Correction. Please provide a copy of this Filing Receipt with the changes noted thereon. If you received a "Notice to File Missing Parts" for this application, please submit any corrections to this Filing Receipt with your reply to the Notice. When the USPTO processes the reply to the Notice, the USPTO will generate another Filing Receipt incorporating the requested corrections**

Applicant(s)

Roger D. Wimer, Kelso, WA;
David N. Stearns, Canby, OR;

Assignment For Published Patent Application

IFA Nurseries, Inc.

Power of Attorney: The patent practitioners associated with Customer Number 35940

Domestic Priority data as claimed by applicant

This application is a CIP of 11/171,596 06/29/2005 ABN

Foreign Applications

If Required, Foreign Filing License Granted: 06/14/2007

The country code and number of your priority application, to be used for filing abroad under the Paris Convention, is **US 11/801,722**

Projected Publication Date: Not Applicable

Non-Publication Request: No

Early Publication Request: No
**** SMALL ENTITY ****

Title

Device for protecting container-grown seedling root systems and method for its manufacture

Preliminary Class

047

PROTECTING YOUR INVENTION OUTSIDE THE UNITED STATES

Since the rights granted by a U.S. patent extend only throughout the territory of the United States and have no effect in a foreign country, an inventor who wishes patent protection in another country must apply for a patent in a specific country or in regional patent offices. Applicants may wish to consider the filing of an international application under the Patent Cooperation Treaty (PCT). An international (PCT) application generally has the same effect as a regular national patent application in each PCT-member country. The PCT process **simplifies** the filing of patent applications on the same invention in member countries, but **does not result** in a grant of "an international patent" and does not eliminate the need of applicants to file additional documents and fees in countries where patent protection is desired.

Almost every country has its own patent law, and a person desiring a patent in a particular country must make an application for patent in that country in accordance with its particular laws. Since the laws of many countries differ in various respects from the patent law of the United States, applicants are advised to seek guidance from specific foreign countries to ensure that patent rights are not lost prematurely.

Applicants also are advised that in the case of inventions made in the United States, the Director of the USPTO must issue a license before applicants can apply for a patent in a foreign country. The filing of a U.S. patent application serves as a request for a foreign filing license. The application's filing receipt contains further information and guidance as to the status of applicant's license for foreign filing.

Applicants may wish to consult the USPTO booklet, "General Information Concerning Patents" (specifically, the section entitled "Treaties and Foreign Patents") for more information on timeframes and deadlines for filing foreign patent applications. The guide is available either by contacting the USPTO Contact Center at 800-786-9199, or it can be viewed on the USPTO website at http://www.uspto.gov/web/offices/pac/doc/general/index.html.

For information on preventing theft of your intellectual property (patents, trademarks and copyrights), you may wish to consult the U.S. Government website, http://www.stopfakes.gov. Part of a Department of Commerce initiative, this website includes self-help "toolkits" giving innovators guidance on how to protect intellectual property in specific countries such as China, Korea and Mexico. For questions regarding patent enforcement issues, applicants may call the U.S. Government hotline at 1-866-999-HALT (1-866-999-4158).

LICENSE FOR FOREIGN FILING UNDER

Title 35, United States Code, Section 184

Title 37, Code of Federal Regulations, 5.11 & 5.15

GRANTED

The applicant has been granted a license under 35 U.S.C. 184, if the phrase "IF REQUIRED, FOREIGN FILING LICENSE GRANTED" followed by a date appears on this form. Such licenses are issued in all applications where the conditions for issuance of a license have been met, regardless of whether or not a license may be required as

set forth in 37 CFR 5.15. The scope and limitations of this license are set forth in 37 CFR 5.15(a) unless an earlier license has been issued under 37 CFR 5.15(b). The license is subject to revocation upon written notification. The date indicated is the effective date of the license, unless an earlier license of similar scope has been granted under 37 CFR 5.13 or 5.14.

This license is to be retained by the licensee and may be used at any time on or after the effective date thereof unless it is revoked. This license is automatically transferred to any related applications(s) filed under 37 CFR 1.53(d). This license is not retroactive.

The grant of a license does not in any way lessen the responsibility of a licensee for the security of the subject matter as imposed by any Government contract or the provisions of existing laws relating to espionage and the national security or the export of technical data. Licensees should apprise themselves of current regulations especially with respect to certain countries, of other agencies, particularly the Office of Defense Trade Controls, Department of State (with respect to Arms, Munitions and Implements of War (22 CFR 121-128)); the Bureau of Industry and Security, Department of Commerce (15 CFR parts 730-774); the Office of Foreign AssetsControl, Department of Treasury (31 CFR Parts 500+) and the Department of Energy.

NOT GRANTED

No license under 35 U.S.C. 184 has been granted at this time, if the phrase "IF REQUIRED, FOREIGN FILING LICENSE GRANTED" DOES NOT appear on this form. Applicant may still petition for a license under 37 CFR 5.12, if a license is desired before the expiration of 6 months from the filing date of the application. If 6 months has lapsed from the filing date of this application and the licensee has not received any indication of a secrecy order under 35 U.S.C. 181, the licensee may foreign file the application pursuant to 37 CFR 5.15(b).

UNITED STATES PATENT AND TRADEMARK OFFICE

Commissioner for Patents
United States Patent and Trademark Office
P.O. Box 1450
Alexandria, VA 22313-1450
www.uspto.gov

FELDMAN LAW GROUP PC
12 E 41ST STREET
NEW YORK NY 10017

COPY MAILED

MAY 09 2008

In re Application of	:	
Knoll et al.	:	
Application No. 11/801,734	:	DECISION ON PETITION
Filed: May 10, 2007	:	
Attorney Docket No. 182.02	:	

This is a decision on the petition under the unintentional provisions of 37 CFR 1.137(b), filed April 17, 2008, to revive the above-identified application.

The petition is **GRANTED**.

The petition satisfies the requirements of 37 CFR 1.137(b) in that petitioner has supplied (1) the reply in the form of an Oath/Declaration, a substitute specification, replacement drawings, and requisite fees, (2) the petition fee, and (3) a proper statement of unintentional delay.

Telephone inquiries concerning this decision should be directed to the undersigned at (571) 272-3206.

This matter is being referred to the Office of Patent Application Processing for further processing.

Liana Walsh
Petitions Examiner
Office of Petitions

UNITED STATES PATENT AND TRADEMARK OFFICE

Commissioner for Patents
United States Patent and Trademark Office
P.O. Box 1450
Alexandria, VA 22313-1450
www.uspto.gov

MAILED

APR 2 1 2010

OFFICE OF PETITIONS

RAMINDA U. MADURAWE
882 LOUISE DRIVE
Sunnyvale CA 94087

In re Application of	:	
Raminda Udaya Madurawe	:	
Application No. 11/801,738	:	DECISION ON PETITION
Filed: May 11, 2007	:	
Attorney Docket No. MADURAWE049	:	

This is a decision on the petition under the unintentional provisions of 37 CFR 1.137(b), filed January 25, 2010, to revive the above-identified application.

The petition is **GRANTED**.

The application became abandoned for failure to reply in a timely manner to the non-final Office action mailed July 8, 2009, which set a shortened statutory period for reply of three (3) months. No extensions of time under the provisions of 37 CFR 1.136(a) were obtained. Accordingly, the application became abandoned on October 9, 2009.

The petition satisfies the requirements of 37 CFR 1.137(b) in that petitioner has supplied (1) the reply in the form of an amendment, (2) the petition fee of $810, (3) a proper statement of unintentional delay. Accordingly, the amendment is accepted as being unintentionally delayed.

37 CFR 1.137(b)(3) requires a statement that the entire delay in filing the required reply from the due date for the reply until the filing of a grantable petition pursuant to 37 CFR 1.137(b) was unintentional. Since the statement contained in the petition varies from the language required by 37 CFR 1.137(b)(3), the statement contained in the petition is being construed as the statement required by 37 CFR 1.137(b)(3). Petitioner must notify the Office if this is **not** a correct interpretation of the statement contained in the petition.

The application file does not indicate a change of address has been filed in this case, although the address given on the petition differs from the address of record. A change of address should be filed in this case in accordance with MPEP 601.03. A courtesy copy of this decision is being mailed to the address noted on the petition. However, until otherwise instructed, all future correspondence regarding this application will be mailed solely to the address of record.

Telephone inquiries concerning this decision should be directed to Kimberly Inabinet at (571) 272-4618.

This application is being referred to Technology Center AU 2823 for appropriate action by the Examiner in the normal course of business on the reply received January 25, 2010.

/Kimberly Inabinet/

Kimberly Inabinet
Petitions Examiner
Office of Petitions

cc: Bao Tran
Tran & Associates
P.O. Box 68
Saratoga, CA 95071

UNITED STATES PATENT AND TRADEMARK OFFICE

Commissioner for Patents
United States Patent and Trademark Office
P.O. Box 1450
Alexandria, VA 22313-1450
www.uspto.gov

MAILED

JUN 2 1 2010

OFFICE OF PETITIONS

PAUL J. COOK
115 PINE STREET
MANCHESTER MA 01944

In re Application of	:	
Bradley L. TEBO	:	
Application No. 11/801,757	:	DECISION ON PETITION
Filed: May 11, 2007	:	TO WITHDRAW
Attorney Docket No. T001.7009	:	FROM RECORD
	:	

This is a decision on the Request to Withdraw as attorney or agent of record under 37 C.F.R. § 1.36(b), filed May 7, 2010.

The request is **APPROVED**.

A grantable request to withdraw as attorney/agent of record must be signed by every attorney/agent seeking to withdraw or contain a clear indication that one attorney is signing on behalf of another/others. The Office requires the practitioner(s) requesting withdrawal to certify that he, she, or they have: (1) given reasonable notice to the client, prior to the expiration of the response period, that the practitioner(s) intends to withdraw from employment; (2) delivered to the client or a duly authorized representative of the client all papers and property (including funds) to which the client is entitled; and (3) notified the client of any responses that may be due and the time frame within which the client must respond, pursuant 37 CFR 10.40(c).

The request was signed by Paul J. Cook the sole attorney of record.

Paul J. Cook has been withdrawn.

Applicant is reminded that there is no attorney of record at this time.

The correspondence address for future communications from the Office has been changed and the new correspondence address is indicated below.

Telephone inquiries concerning this decision should be directed to the undersigned at 571-272-6735.

/DCG/
Diane C. Goodwyn
Petitions Examiner
Office of Petitions

cc: BRADLEY L. TEBO
62 KINSMAN CIRCLE
TOPSFIELD MA 01983

UNITED STATES PATENT AND TRADEMARK OFFICE

UNITED STATES DEPARTMENT OF COMMERCE
United States Patent and Trademark Office
Address: COMMISSIONER FOR PATENTS
P.O. Box 1450
Alexandria, Virginia 22313-1450
www.uspto.gov

APPLICATION NUMBER	FILING OR 371(C) DATE	FIRST NAMED APPLICANT	ATTY. DOCKET NO./TITLE
11/801,757	05/11/2007	Bradley L. Tebo	T001.7009

CONFIRMATION NO. 4609

POWER OF ATTORNEY NOTICE

Paul J. Cook
115 Pine Street
Manchester, MA 01944

OC000000042192311

Date Mailed: 06/21/2010

NOTICE REGARDING CHANGE OF POWER OF ATTORNEY

This is in response to the Power of Attorney filed 05/07/2010.

- The withdrawal as attorney in this application has been accepted. Future correspondence will be mailed to the new address of record. 37 CFR 1.33.

/dcgoodwyn/

Office of Data Management, Application Assistance Unit (571) 272-4000, or (571) 272-4200, or 1-888-786-0101

UNITED STATES PATENT AND TRADEMARK OFFICE

Commissioner for Patents
United States Patent and Trademark Office
P.O. Box 1450
Alexandria, VA 22313-1450
www.uspto.gov

CASIMIR JONES, S.C.
440 SCIENCE DRIVE
SUITE 203
MADISON WI 53711

MAILED

MAR 24 2009

OFFICE OF PETITIONS

In re Application of	:	
Gammelsaeter et al.	:	
Application Number: 11/801778	:	ON PETITION
Filing Date: 05/11/2007	:	
Attorney Docket Number:	:	
REGENICS-14541	:	

This is a decision on the "PETITION TO WITHDRAW NOTICE TO FILE MISSING PARTS OF NONPROVISIONAL APPLICATION FILED UNDER 37 CFR 1.53(b)," filed on February 2, 2009, which is treated as a petition under 37 CFR 1.181 to withdraw the Notice to File Missing Parts of Nonprovisional Application mailed on December 1, 2008.

The petition is **DISMISSED**.

On May 11, 2007, the application was filed, without an executed oath or declaration. On June 18, 2007, a Notice to File Missing Parts of Nonprovisional Application was mailed, stating that the oath or declaration was missing.

In response, on August 22, 2007, petitioners filed one (1) page of a declaration naming Runhild Gammelsaeter and Jam Remmereit as joint inventors, signed by joint inventor Remmereit. A two (2) month extension of time was also requested and paid for.

On December 1, 2008, an additional Notice to File Missing Parts of Nonprovisional Application was mailed, stating that the oath or declaration was missing.

In reply, on February 2, 2009, the present petition was filed, along with one (1) page of declaration signed by joint inventor Gammelsaeter.

Petitioners in essence argue that a properly executed oath or declaration was timely filed on August 22, 2007. In support, petitioners have provided a copy of an itemized stamped postcard bearing an "Office date" stamp of August 22, 2007, identifying the application by application number, first-named inventor, and and attorney docket number, and itemizing the filing of, *inter alia*, "declaration/oath/affidavits."

Petitioners' argument has been considered, but is not persuasive.

A review of the record reveals that one (1) page of declaration, signed only by joint inventor Remmereit, is located among the papers filed on August 22, 2007.

Where the records of the Office (e.g. the file of the application) contain any document(s) or fee(s) corresponding to the contents of the correspondence at issue, the Office will rely upon its official record of the contents of such correspondence in the absence of convincing evidence (e.g. a postcard receipt under MPEP 503 containing specific itemization of the document(s) or fee(s) purported to have been filed with the correspondence at issue) that the Office received and misplaced any document(s) or fee(s) that is not among the official records of the Office. If a new application is being filed, all parts of the application being submitted should be separately listed on the postcard (e.g. the number of pages of specification (including written description, claims and abstract) number of claims, number of sheets of drawings, number of pages of oath/declaration. The postcard receipt will not serve as *prima facie* evidence of receipt of any item which is not adequately itemized on the postcard.[1]

MPEP 503, states, in pertinent part:

> The identifying data on the postcard should be so complete as to clearly identify the item for which a receipt is requested. For example, the postcard should identify the applicant's name, application number (if known), confirmation number (if known), filing date, interference number, title of the invention, etc. The postcard should also identify the type of paper being filed, e.g., new application, affidavit, amendment, notice of appeal, appeal brief, drawings, fees, motions, supplemental oath or declaration, petition, etc., and the number of pages being

---

[1] MPEP 503.

> submitted. If a new application is being filed, all parts of the application being submitted should be separately listed on the postcard, e.g., the number of pages of specification (including written description, claims and abstract), number of claims, number of sheets of drawings, number of pages of oath/declaration, number of pages of cover sheet (provisional application).
>
> The postcard receipt will not serve as *prima facie* evidence of receipt of any item which is not adequately itemized on the postcard. **For example, merely listing on the postcard "a complete application" or "patent application" will not serve as a proper receipt for each of the required components of an application (e.g., specification (including claims), drawings (if necessary), oath or declaration and the application filing fee) or missing portions (e.g., pages, sheets of drawings) of an application if one of the components or portion of a component is found to be missing by the USPTO. Each separate component should be specifically and properly itemized on the postcard.** Furthermore, merely incorporating by reference in the postcard receipt, the items listed in a transmittal letter will not serve as *prima facie* evidence of receipt of those items.
>
> (emphasis added)

While the postcard itemizes the filing of a "declaration", the did in fact receive a declaration, albeit an incomplete declaration. As the one (1) page of declaration received was lacking the signature of joint inventor Gammelsaeter, petitioners obviously intended to file two (2) pages of declaration, one signed by each joint inventor. However, the postcard did not itemize the number of pages of declaration, but merely a "declaration." Therefore, the postcard does not serve as *prima facie* evidence that two (2) pages of the declaration were filed on August 22, 2007.

A postcard receipt will not serve as *prima facie* evidence of receipt in the USPTO of any items which are not properly itemized and identified. Simply put, petitioner's postcard itemized receipt of a declaration and said item was received on August 22, 2007. Petitioner's postcard did <u>not</u> itemize the number of pages of declaration filed, and therefore will not serve as evidence of

receipt of a completely executed declaration where the executed declaration comprises two (2) pages.

Accordingly, the Notice to File Missing Parts of Nonprovisional Application mailed on December 1, 2008, was not mailed in error insomuch as it indicated that a properly executed declaration had not been received. Therefore, the Notice to File Missing Parts of Nonprovisional Application mailed on December 1, 2008, was not mailed in error and will not be withdrawn.

Receipt of the one (1) page of declaration signed by joint inventor Gammelsaeter filed on February 2, 2009 is acknowledged.

The application is referred to the Office of Patent Application Processing for further processing.

Telephone inquiries concerning this matter may be directed to the undersigned at (571) 272-3231.

D Wood

Douglas I. Wood
Senior Petitions Attorney
Office of Petitions

UNITED STATES PATENT AND TRADEMARK OFFICE

UNITED STATES DEPARTMENT OF COMMERCE
United States Patent and Trademark Office
Address: COMMISSIONER FOR PATENTS
P.O. Box 1450
Alexandria, Virginia 22313-1450
www.uspto.gov

APPLICATION NO.	FILING DATE	FIRST NAMED INVENTOR	ATTORNEY DOCKET NO.	CONFIRMATION NO.
11/801,795	05/11/2007	Richard Allen Hayes	AD7492 US NA	3325

7590 03/16/2009
E I DU PONT DE NEMOURS AND COMPANY
LEGAL PATENT RECORDS CENTER
BARLEY MILL PLAZA 25/1122B
4417 LANCASTER PIKE
WILMINGTON, DE 19805

EXAMINER
NELSON, MICHAEL B

ART UNIT	PAPER NUMBER
1794	

NOTIFICATION DATE	DELIVERY MODE
03/16/2009	ELECTRONIC

DECISION GRANTING PETITION UNDER 37 CFR 1.138(d)

The declaration of express abandonment is recognized

This is in response to the petition under 37 CFR 1.138(d), requesting for a refund of any previously paid search fee and excess claims fee in the above-identified application.

The petition is granted.

The express abandonment is recognized. Any previously paid search fee and excess claims fee are hereby refunded.

Telephone inquiries should be directed to the Office of Data Management at (571) 272-4200.

Betty Powell

Patent Publication Branch
Office of Data Management

```
Adjustment date: 03/12/2009  BPOWELL
05/14/2007 EAYALEW1 00000045 041928   11801795
02 FC:1111        500.00 CR
04 FC:1202        100.00 CR
```

```
Adjustment Date: 03/12/2009  BPOWELL
03/02/2007 HLE333   00000036 041928   11712295
02 FC:1111        500.00 CR
04 FC:1202        200.00 CR
```

UNITED STATES PATENT AND TRADEMARK OFFICE

Commissioner for Patents
United States Patent and Trademark Office
P.O. Box 1450
Alexandria, VA 22313-1450
www.uspto.gov

HICKMAN PALERMO TRUONG & BECKER/ORACLE
2055 GATEWAY PLACE
SUITE 550
SAN JOSE, CA 95110-1083

MAILED

JUN 10 2010

OFFICE OF PETITIONS

In re Application of	:	
Prasad Bagal	:	
Application No. 11/801,805	:	DECISION ON PETITION
Filed: May 10, 2007	:	
Attorney Docket No. 502777-3230	:	

This is a decision on the petition under 37 CFR 1.314, filed June 9, 2010, to defer issuance of the patent.

The petition is **GRANTED**.

Issuance will be deferred for a period of one month from the date of this decision. At the end of this period, the application will be referred to Publishing Division to be processed into a patent.

If an additional deferral period is required, another petition and fee should be promptly submitted. The petition must include a showing of extraordinary circumstances. See MPEP 1306.01.

Further correspondence with respect to this matter should be addressed as follows:

By mail: Mail Stop PETITION
Commissioner for Patents
Post Office Box 1450
Alexandria, VA 22313-1450

By hand: Customer Service Window
Mail Stop Petitions
Randolph Building
401 Dulany Street
Alexandria, VA 22314

By Fax: (571) 273-8300
ATTN: Office of Petitions

Telephone inquiries regarding this decision should be directed to April M. Wise at (571) 272-1642. All other inquiries regarding this application should be directed to the Technology Center.

/SDB/
Sherry Brinkley
Petitions Examiner
Office of Petitions

UNITED STATES PATENT AND TRADEMARK OFFICE

Commissioner for Patents
United States Patent and Trademark Office
P.O. Box 1450
Alexandria, VA 22313-1450
www.uspto.gov

TOWNSEND AND TOWNSEND AND CREW, LLP
TWO EMBARCADERO CENTER
EIGHTH FLOOR
SAN FRANCISCO CA 94111-3834

COPY MAILED

OCT 16 2007

OFFICE OF PETITIONS

In re Application of:
Bacher, et al.
Application No. 11/801,818
Deposited: May 10, 2007
Attorney Docket No. 080633-000100US
For: BACKFLUSHABLE FILTER APPARATUS FOR MOLTEN MATERIAL AND DISTRIBUTION UNIT

ON PETITION

This is a decision on the correspondence entitled, "PETITION REGARDING "NOTICE OF INCOMPLETE NONPROVISIONAL APPLICATION" UNDER 37 CFR 1.53(b)," filed June 28, 2007 (certificate of mailing date June 26, 2007. The correspondence will be treated under 37 CFR 1.53(e).

The petition under 37 CFR 1.153(e) to accord a May 10, 2007 filing date for the application is **GRANTED**.

The application was deposited on May 10, 2007. On June 8, 2007, the Office of Initial Patent Examination (OIPE) mailed a Notice of Incomplete Nonprovisional Application stating that the application had not been accorded a filing date because it was deposited without drawings.

It is noted that a physical copy of PCT/WO2004/037514A2, a parent application, was filed on May 10, 2007, along with a verified translation of the part of the parent application that is in a foreign language.

Pursuant to 37 CFR 1.52(d), a nonprovisional application may be in a language other than English. Petitioner has explained that PCT/WO2004/037514A2 is not meant to be a foreign reference, as the Office characterized it in the Image File Wrapper. Instead, the parent application is meant to be the application. As specified in 37 CFR 1.52(d):

> (1) Nonprovisional application . If a nonprovisional application is filed in a language other than English, an English language translation of the non-English language application, a statement that the translation is accurate, and the processing fee set forth in § 1.17(i) are required. If these items are not filed

> with the application, applicant will be notified and given a period of time within which they must be filed in order to avoid abandonment.

Therefore, the application is entitled to a May 10, 2007 filing date based on what was filed on May 10, 2007. Petitioner provided an English language translation of the non-English language application and a statement that the translation is accurate. Deposit account no. 20-1430 will be charged a $130.00 processing fee. It is noted that the drawings in the parent application contain no non-English text. The petition is **granted**.

This application is being returned to the Office of Initial Patent Examination for further processing, using the drawings found in PCT/WO2004/037514A2, which is currently coded as a "Foreign Reference" . OIPE will mail a filing receipt citing **May 10, 2007** as the filing date for the application.

Telephone inquiries concerning this matter may be directed to the undersigned at (571) 272-3230

Shirene Willis Brantley

Shirene Willis Brantley
Senior Petitions Attorney
Office of Petitions

UNITED STATES PATENT AND TRADEMARK OFFICE

Commissioner for Patents
United States Patent and Trademark Office
P.O. Box 1450
Alexandria, VA 22313-1450
www.uspto.gov

NASH & TITUS, LLC
21402 UNISON RD
MIDDLEBURG VA 20117

COPY MAILED

DEC 0 2 2009

OFFICE OF PETITIONS

In re Application of	:	
Kenneth Sherman	:	
Application No. 11/801,834	:	DECISION ON PETITION
Filed: May 11, 2007	:	
Attorney Docket No. Army 160A	:	

This is a decision on the petition under 37 C.F.R. § 1.137(b), filed October 8, 2009, to revive the above-identified application. In view of the allegation in the petition that a response was previously timely filed, the petition will also be considered under 37 CFR 1.181 requesting the withdrawal of the holding of abandonment in the above-identified application.

The petition under 37 CFR 1.181 is **DISMISSED**.

Any request for reconsideration of this decision should be filed within two (2) months from the mail date of this decision. Note 37 CFR 1.181(f). The request for reconsideration should include a cover letter and be entitled as a "Renewed Petition under 37 CFR 1.181 to Withdraw the Holding of Abandonment."

The above-identified application became abandoned for failure to reply in a timely manner to the non-final Office action mailed February 27, 2009, which set a shortened statutory period for reply of three (3) months. No extensions of time under the provisions of 37 CFR 1.136(a) were obtained. Accordingly, by operation of law, the above-identified application became abandoned on May 28, 2009. A Notice of Abandonment was mailed October 1, 2009.

Petitioner asserts that a reply was timely filed April 24, 2009. To support this assertion, petitioner contends that "A copy of the certificate of mailing is also enclosed evidencing that the Response was filed on April 24, 2009 with sufficient postage as first class mail addressed to the Commission for Patents". However, no submission has been supplied by petitioner.

A review of USPTO records does not include an April 24, 2009 Amendment. Failure to receive correspondence which includes a certificate of mailing or certificate of facsimile transmission is addressed in 37 CFR 1.8(b), reproduced below:

> In the event that correspondence is considered timely filed by being mailed or transmitted in accordance with paragraph (a) of this section, but not received in the U.S. Patent and Trademark Office after a reasonable amount of time has elapsed from the time of mailing or transmitting of the correspondence, or after the application is held to be abandoned, or after the proceeding is dismissed, terminated, or decided with prejudice, the correspondence will be considered timely if the party who forwarded such correspondence:
>
> (1) Informs the Office of the previous mailing or transmission of the correspondence promptly after becoming aware that the Office has no evidence of receipt of the correspondence;
>
> (2) Supplies an additional copy of the previously mailed or transmitted correspondence and certificate; and

(3) Includes a statement which attests on a personal knowledge basis or to the satisfaction of the Director to the previous timely mailing or transmission. If the correspondence was sent by facsimile transmission, a copy of the sending unit's report confirming transmission may be used to support this statement.

The petition does not satisfy items (2) and (3) as listed above.

As the petition fails to satisfy all of the above-listed requirements, the petition requesting withdrawal of the holding of abandonment cannot be granted at this time.

The petition under 1.137(b) is **DISMISSED**.

Any request for reconsideration of this decision must be submitted within TWO (2) MONTHS from the mail date of this decision. Extensions of time under 37 CFR 1.136(a) are permitted. The reconsideration request should include a cover letter entitled "Renewed Petition under 37 CFR 1.137(b)." This is not a final agency action within the meaning of 5 U.S.C. § 704.

A grantable petition under 37 CFR 1.137(b) must be accompanied by: (1) the required reply, unless previously filed; (2) the petition fee as set forth in 37 CFR 1.17(m); and (3) a statement that the entire delay in filing the required reply from the due date for the reply until the filing of a grantable petition pursuant to 37 CFR 1.137(b) was unintentional. Where there is a question as to whether either the abandonment or the delay in filing a petition under 37 CFR 1.137 was unintentional, the Director may require additional information. See MPEP 711.03(c)(II)(C) and (D).

The instant petition lacks item (1), the required reply. Petitioner has failed to submit an Amendment in response to the non-final Office action of February 27, 2009.

Although there is no fee requirement for a petition under 37 CFR 1.181, the remitted $1,620.00 petition fee submitted under 37 CFR 1.137(b) will be held should petitioner choose file a renewed petition under 37 CFR 1.137(b).

Further correspondence with respect to this matter should be addressed as follows:

By Mail: Mail Stop PETITION
Commissioner for Patents
P. O. Box 1450
Alexandria, VA 22313-1450

By Hand: U. S. Patent and Trademark Office
Customer Service Window, Mail Stop Petitions
Randolph Building
401 Dulany Street
Alexandria, VA 22314

By Internet: EFS-Web

The centralized facsimile number is (571) 273-8300.

Telephone inquiries concerning this decision should be directed to Joan Olszewski at (571) 272-7751.

/Liana Walsh/
Liana Walsh
Petitions Examiner
Office of Petitions

UNITED STATES PATENT AND TRADEMARK OFFICE

Commissioner for Patents
United States Patent and Trademark Office
P.O. Box 1450
Alexandria, VA 22313-1450
www.uspto.gov

NASH & TITUS, LLC
21402 UNISON RD
MIDDLEBURG VA 20117

MAILED

MAR 02 2010

OFFICE OF PETITIONS

In re Application of	:	
Kenneth Sherman	:	
Application No. 11/801,834	:	DECISION ON PETITION
Filed: May 11, 2007	:	
Attorney Docket No. Army 160A	:	

This is a decision on the renewed petition under 37 CFR 1.137(b), filed December 8, 2009, which will be treated as a petition to withdraw of the holding of abandonment in the above-identified application.

The petition to withdraw the holding of abandonment is **GRANTED.**

The above-identified application was held abandoned for failure to timely reply to the non-final Office action mailed February 27, 2009, which set a shortened statutory period for reply of three (3) months. No extensions of time under the provisions of 37 CFR 1.136(a) were obtained. A Notice of Abandonment was mailed on October 1, 2009.

Petitioner contends that the reply was in fact timely filed and has submitted a copy of an Amendment with a Certificate of Mailing statement signed by Caroline Nash dated April 24, 2009. Accordingly, the submission will be considered timely.

In view of the above, the Notice of Abandonment is hereby vacated and the holding of abandonment withdrawn. Further, the petition under 37 CFR 1.137(b) is hereby **DISMISSED AS MOOT**.

A petition to withdraw the holding of abandonment under the provisions of 37 CFR 1.181 does not require a fee. Accordingly, the large entity $1,620.00 petition fee submitted with the 1.137(b) will be credited to petitioner's Deposit Account in due course.

Telephone inquiries concerning this decision should be directed to Joan Olszewski at (571) 272-7751.

This matter is being referred to Technology Center AU 1641for appropriate action in the normal course of business on the reply received with the petition on December 8, 2009.

/Liana Walsh/
Liana Walsh
Petitions Examiner
Office of Petitions

UNITED STATES PATENT AND TRADEMARK OFFICE

Commissioner for Patents
United States Patent and Trademark Office
P.O. Box 1450
Alexandria, VA 22313-1450
www.uspto.gov

Paper No.

KEAN, MILLER, HAWTHORNE, D'ARMOND,
MCCOWAN & JARMAN, L.L.P.
ONE AMERICAN PLACE, 22ND FLOOR
P.O. BOX 3513
BATON ROUGE LA 70821

COPY MAILED
DEC 14 2009
OFFICE OF PETITIONS

In re Application of	:	
Aly et al.	:	
Application No. 11/801,848	:	DECISION ON PETITION
Filed: May 11, 2007	:	PURSUANT TO
Attorney Docket No.: 17220-40	:	37 C.F.R. § 1.137(B)
Title: ULTRA LOW POWER SRAM CELL DESIGN	:	

This is a decision on the petition pursuant to 37 C.F.R. § 1.137(b), filed September 29, 2009, to revive the above-identified application.

This petition pursuant to 37 C.F.R. § 1.137(b) is **GRANTED**.

The above-identified application became abandoned for failure to reply in a timely manner to the non-final Office action, mailed August 13, 2008, which set a shortened statutory period for reply of three months. No response was received, and no extensions of time under the provisions of 37 C.F.R. § 1.136(a) were requested. Accordingly, the above-identified application became abandoned on November 14, 2008. A notice of abandonment was mailed on March 24, 2009.

A grantable petition pursuant to 37 C.F.R. § 1.137(b) must be accompanied by:

(1) The reply required to the outstanding Office action or notice, unless previously filed;
(2) The petition fee as set forth in 37 C.F.R. § 1.17(m);
(3) A statement that the entire delay in filing the

required reply from the due date for the reply until the filing of a grantable petition pursuant to this paragraph was unintentional. The Commissioner may require additional information where there is a question whether the delay was unintentional, and;

(4) Any terminal disclaimer (and fee as set forth in 37 C.F.R. § 1.20(d)) required pursuant to paragraph (d) of this section.

With this petition, Petitioner has submitted the petition fee, an amendment, and the proper statement of unintentional delay. As such, the first three requirements of Rule 1.137(b) have been met. The fourth requirement of Rule 1.137(b) is not applicable, as a terminal disclaimer is not required.[1]

The Technology Center will be notified of this decision, and jurisdiction over this application is transferred to the Technology Center, so that the application may receive further processing. The Technology Center's support staff will notify the Examiner of this decision, so that the amendment that was received on September 29, 2009 can be processed in due course.

Petitioner may find it beneficial to view Private PAIR within a fortnight of the present decision to ensure that the revival has been acknowledged by the Technology Center in response to this decision. It is noted that all inquiries with regard to any failure of that change in status should be directed to the Technology Center where that change of status must be effected - **the Office of Petitions cannot effectuate a change of status**. Telephone inquiries regarding *this decision* should be directed to the undersigned at (571) 272-3225.[2] All other inquiries concerning this application should be directed to the Technology Center.

/Paul Shanoski/
Paul Shanoski
Senior Attorney
Office of Petitions

---

1 See Rule 1.137(d).
2 Petitioner will note that all practice before the Office should be in writing, and the action of the Office will be based exclusively on the written record in the Office. See 37 C.F.R. § 1.2. As such, Petitioner is reminded that no telephone discussion may be controlling or considered authority for Petitioner's further action(s).

UNITED STATES PATENT AND TRADEMARK OFFICE

Commissioner for Patents
United States Patent and Trademark Office
P.O. Box 1450
Alexandria, VA 22313-1450
www.uspto.gov

E I DU PONT DE NEMOURS AND COMPANY
LEGAL PATENT RECORDS CENTER
BARLEY MILL PLAZA 25/1122B
4417 LANCASTER PIKE
WILMINGTON DE 19805

In re Application of	:	OCT 19 2009
SUNKARA, HARI BABU	:	
Application No.: 11/801,872	:	DECISION ON
Filing or 371(c) Date: 05/11/07	:	PETITION
Attorney Docket Number: SO0045USNA	:	

This is a decision in response to the "Petition to Withdraw Holding of Abandonment," filed June 10, 2009.

This petition is **GRANTED**.

The above-identified application became abandoned for failure to timely and properly reply to the Notice of Allowance, mailed February 5, 2009.

In view of the foregoing, the holding of abandonment for failure to timely pay the issue fee is hereby withdrawn and the application restored to pending status.

Telephone inquiries concerning this matter should be directed to the undersigned at (703) 756-1547.

Kay D Pinkney
Application Assistance Unit
Office of Data Management

UNITED STATES PATENT AND TRADEMARK OFFICE

Commissioner for Patents
United States Patent and Trademark Office
P.O. Box 1450
Alexandria, VA 22313-1450
www.uspto.gov

Patent No. : 7,628,999 B2
Serial No. : 11/801,872
Inventor(s) : Sunkara
Issued : December 8, 2009
Title : **PERSONAL CARE COMPOSITIONS**
Docket No. : **SO0045USNA**

Re: Request for Reconsideration

Consideration has been given your request for the issuance of a certificate of correction for the above-identified patent under the provisions of 37 CFR 1.322 and/or 1.323.

Assignees' names and addresses (assignment data) printed in a patent are based *solely* on information supplied in the appropriate space for identifying the assignment data, i.e., item 3 of the Fee(s) Transmittal Form PTOL-85B. After payment of the issue fee, correction of assignment data submitted on the PTOL-85B can only be done by Certificate of Correction under 37 CFR 1.323, with a request under 37 CFR 3.81(b).

A request for a patent to be corrected to state the name of the assignee must:

A. state that the assignment was submitted for recordation as set forth in 37 CFR 3.11 before issuance of the patent;
B. include a request for a certificate of correction under 37 CFR 1.323 along with the fee set forth in 37 CFR 1.20(a); and
C. include the processing fee set forth in 37 CFR 1.17(i).

If the request is granted, Certificates of Correction Branch will be notified that a Certificate of Correction may be issued.
See Manual of Patent Examining Procedure, Section 1481.01 (Rev. 3) (Oct. 2005).

Applicant has not included items A and or C above, accordingly, the request for Certificate of Correction to add or change the assignee data is dismissed.

Any request under 37 CFR 3.81(b) should be directed to the following address or facsimile number:

By mail:	Mail Stop PETITIONS Commissioner for Patents Post Office Box 1450 Alexandria, VA 22313-1450
By hand:	Customer Service Window Mail Stop Petitions Randolph Building 401 Dulany Street Alexandria, VA 22314
By fax:	571-273-8300 ATTN: Office of Petitions

If a fee (currently $100) was previously submitted for consideration of a Request for Certificate of Correction, under CFR 1.323, to correct assignment data, no additional fee is required.

Ernest C. White, *LIE*
For Mary F. Diggs (703) 756-1580
Decisions & Certificates
of Correction Branch
(703) **756-1590**

E I DU PONT DE NEMOURS AND COMPANY
LEGAL PATENT RECORDS CENTER
BARLEY MILL PLAZA 25/1122B
4417 LANCASTER PIKE
WILMINGTON DE 19805

ecw

UNITED STATES PATENT AND TRADEMARK OFFICE

Commissioner for Patents
United States Patent and Trademark Office
P.O. Box 1450
Alexandria, VA 22313-1450
www.uspto.gov

COPY MAILED

SEP 29 2009

OFFICE OF PETITIONS

KING & SPALDING LLP
P.O. BOX 889
BELMONT CA 94002-0889

In re Application of

WELLER, Dwight D. et al.
Application No. 11/801,885
Filed: May 10, 2007
Attorney Docket No. **50450-8081.US01**

DECISION ON PETITION
TO WITHDRAW
FROM RECORD

This is a decision on the Request to Withdraw as attorney or agent of record under 37 C.F.R. § 1.36(b), filed August 25, 2009.

The request is **APPROVED**.

A grantable request to withdraw as attorney/agent of record must be signed by every attorney/agent seeking to withdraw or contain a clear indication that one attorney is signing on behalf of another/others. The Office requires the practitioner(s) requesting withdrawal to certify that he, she, or they have: (1) given reasonable notice to the client, prior to the expiration of the response period, that the practitioner(s) intends to withdraw from employment; (2) delivered to the client or a duly authorized representative of the client all papers and property (including funds) to which the client is entitled; and (3) notified the client of any responses that may be due and the time frame within which the client must respond, pursuant 37 CFR 10.40(c).

The request was signed by Peter Dehlinger on behalf of all attorneys of record who are associated with customer No. 79975. All attorneys/agents associated with the Customer Number 79975 have been withdrawn. Applicant is reminded that there is no attorney of record at this time.

All future correspondence will be directed to the first named inventor Dwight D. Weller at the address indicated below.

Telephone inquiries concerning this decision should be directed to Tredelle Jackson at 571-272-2783.

Tredelle D. Jackson
Paralegal Specialist
Office of Petitions

cc: **DWIGHT D. WELLER**
3323 N.W. ELMWOOD DRIVE
CORVALLIS OR 97330

UNITED STATES PATENT AND TRADEMARK OFFICE

Commissioner for Patents
United States Patent and Trademark Office
P.O. Box 1450
Alexandria, VA 22313-1450
www.uspto.gov
DIW Apr-08

ROPES & GRAY LLP
PATENT DOCKETING 39/361
1211 AVENUE OF THE AMERICAS
NEW YORK NY 10036-8704

COPY MAILED

APR 22 2008

OFFICE OF PETITIONS

In re Application of :
Peter H. St. George-Hyslop :
Application Number: 11/801893 :
Filed: 05/11/2007 :
Attorney Docket Number: 003237-0008-104 :

ON PETITION

This is a decision on the petition filed on July 19, 2007, which is treated as a petition requesting that the above-identified application, including three (3) sheets of drawings, be accorded a filing date of May 11, 2007.

The petition is **GRANTED**.

On May 11, 2007, the application was filed.

On June 18, 2007, the Office of Patent Application Processing mailed a Notice of Incomplete Nonprovisional Application, stating that the application had been deposited without drawings, and that application should reconsider whether drawings were necessary under 35 U.S.C. § 113 (first sentence). The Notice stated that the filing date would be the date of receipt of the missing drawings.

In response, on July 19, 2007, the present petition was filed.

Petitioner argues that three (3) drawing sheets were filed with the other application papers on May 11, 2007, but were subsequently misplaced in the U.S. Patent and Trademark Office (Office). In support, a copy of petitioners' postcard receipt was supplied with the present petition. The postcard receipt shows an "Office-date" stamp of May 11, 2007, which includes the above-identified application number. The postcard identifies the application by the sole inventor's name, attorney docket number, and invention title, and acknowledges receipt of, *inter alia*, 3 sheet of drawings. Petitioners request that the application, including the three (3) sheets of drawings, be accorded a filing date of May 11, 2007.

A review of the record reveals that no three (3) sheets of drawings received on May 11, 2007, are located among the application papers received on that date. However, the evidence is convincing that the application papers deposited on May 11, 2007, included three (3) sheets of drawings, which were subsequently misplaced in the Office. Therefore, the application, including three (3) sheets of drawings, is entitled to a filing date of May 11, 2007.

In view of the above, the petition is granted. No petition fee is due. The petition fee will be credited to counsel's deposit account.

The application will be processed with the copy of the three (3) sheets of drawings supplied on July 19, 2007, as a part of the original disclosure.

The application is being referred to the Office of Patent Application Processing for further processing with a filing date of May 11, 2007, using the application papers filed on that date, and the copy of three (3) sheets of drawings supplied with the present petition, and for an indication in Office records that three (3) sheets of drawings were present on filing.

Telephone inquiries should be directed to the undersigned at 571-272-3231.

D Wood

Douglas I. Wood
Senior Petitions Attorney
Office of Petitions

UNITED STATES PATENT AND TRADEMARK OFFICE

Commissioner for Patents
United States Patent and Trademark Office
P.O. Box 1450
Alexandria, VA 22313-1450
www.uspto.gov

COPY MAILED

SEP 1 0 2007

OFFICE OF PETITIONS

SEALED AIR CORPORATION
P.O. BOX 464
DUNCAN SC 29334

In re Application of
Michael E. Broadus
Application No. 11/801,902
Filed: May 11, 2007
Attorney Docket No. D-44043-02

: DECISION GRANTING PETITION

This is a decision on the filing date petition filed August 1, 2007, 37 CFR 1.53(e)(2) [1] and alternatively under 37 CFR 1.57 requesting that the above referenced application be accorded a filing date of May 11, 2007.

The application was filed on May 11, 2007. However, on June 1, 2007 the Office of Initial Patent Examination mailed a Notice of Incomplete Application stating that, *inter alia*, the application had not been filed with drawings and thus, the application could not be accorded a filing date.

In response, the present petition and 9 sheets of drawings, were filed. Petitioners argue that the drawings were filed with the other application papers on May 11, 2007. In support of the petition, a copy of petitioner's postcard receipt which shows an official USPTO date-stamp of May 11, 2007, and the above-identified application number, and acknowledges receipt of, *inter alia*, 9 sheets of drawings, was supplied with the present petition. The postcard receipt lacks any notation of non-receipt of any item listed. Petitioner requests that the application, including the drawings, be accorded a filing date of May 11, 2007.

Upon review, the drawings purportedly deposited on May 11, 2007 have not been located among the application papers. However, the evidence is convincing that the application papers deposited on May 11, 2007, included drawings, which were subsequently misplaced in the USPTO. Therefore, the application, including the 9 sheets of drawings, was complete on filing and entitled to a filing date of May 11, 2007.

---

[1] Any request for review of a notification pursuant to paragraph (e)(1) of this section, or a notification that the original application papers lack a portion of the specification or drawing(s), must be by way of a petition pursuant to this paragraph accompanied by the fee set forth in § 1.17(f). In the absence of a timely (§ 1.181(f)) petition pursuant to this paragraph, the filing date of an application in which the applicant was notified of a filing error pursuant to paragraph (e)(1) of this section will be the date the filing error is corrected.

In view of the above, the petition under 37 CFR 1.53(e)(2) is **GRANTED** and there is no need to treat the petition alternatively filed under 37 CFR 1.57. Therefore the petition under 37 CFR 1.57 is **DISMISSED** as involving moot issues.

The Notice of Incomplete Nonprovisional Application mailed June 1, 2007, is withdrawn. The petition fee in the amount of $400.00 has been credited back to deposit account no. 07-1765.

The application is being returned to the Office of Initial Patent Examination for reprocessing with a filing date of May 11, 2007, using the application papers filed on May 11, 2007 and the drawings supplied on August 1, 2007.

Telephone inquiries related to this decision should be directed to the undersigned Petitions Attorney at (571) 272-3212.

Patricia Faison-Ball

Patricia Faison-Ball
Senior Petitions Attorney
Office of Petitions

UNITED STATES PATENT AND TRADEMARK OFFICE

Commissioner for Patents
United States Patent and Trademark Office
P.O. Box 1450
Alexandria, VA22313-1450
www.uspto.gov

SEALED AIR CORPORATION
P.O. BOX 464
DUNCAN SC 29334

COPY MAILED

SEP 1 2 2007

OFFICE OF PETITIONS

In re Application of
Michael E. Broadus et al.
Application No. 11/801,902
Filed: May 11, 2007
Attorney Docket No. D-44043-02

: DECISION ACCORDING STATUS
: UNDER 37 CFR 1.47(a)

This is in response to the petition filed August 1, 2007 under 37 CFR 1.47(a).

The petition is **GRANTED**.

The above-identified application was filed without an executed oath or declaration. Accordingly, on June 1, 2007, a "Notice To File Missing Parts of Application" was mailed, requiring *inter alia* a properly executed oath or declaration.

In response, an oath or declaration executed by all joint inventors except Roger Vrooman and the instant petition under 37 CFR 1.47(a) were filed. The petition argues that joint inventor Vrooman refuses to sign the oath or declaration and thus by his actions, to cooperate with the filing of the instant application.

A grantable petition under 37 CFR 1.47(a) requires: (1) proof that the non-signing inventor cannot be reached or refuses to sign the oath or declaration after having been presented with the application papers (specification, claims and drawings); (2) an acceptable oath or declaration in compliance with 35 U.S.C. §§ 115 and 116; (3) the petition fee; and (4) a statement of the last known address of the non-signing inventor.

The petition bears proof that the application papers were personally presented to Mr. Vrooman and that to date he has not returned an executed oath or declaration.

The above-identified application and papers have been reviewed and found in compliance with 37 CFR 1.47(a). In view thereof, this application is hereby accorded Rule 1.47(a) status.

Thus, as provided in Rule 1.47c, this Office will forward notice of this application's filing to the non-signing inventor at the address given in the petition. Notice of the filing of this application will also be published in the Official Gazette.

This matter will be referred to the Office of Initial Patent Examination for further pre-examination processing.

Telephone inquiries concerning this matter may be directed to the undersigned Petitions Attorney at (571) 272-3212.

Patricia Faison-Ball

Patricia Faison-Ball
Senior Petitions Attorney
Office of Petitions

UNITED STATES PATENT AND TRADEMARK OFFICE

Commissioner for Patents
United States Patent and Trademark Office
P.O. Box 1450
Alexandria, VA 22313-1450
www.uspto.gov

VOLENTINE & WHITT PLLC
ONE FREEDOM SQUARE
11951 FREEDOM DRIVE SUITE 1260
RESTON VA 20190

COPY MAILED

DEC 27 2007

OFFICE OF PETITIONS

In re Application of :
Kim, et al. :
Application No. 11/801,915 : ON PETITION
Filed: February 8, 2007 :
Attorney Docket No. SEC.1700 :
FOR: VERTICAL CHANNEL TRANSISTORS AND MEMORY DEVICES INCLUDING VERTICAL CHANNEL TRANSISTORS

This is a decision on the petition under 37 CFR 1.181, filed October 19, 2007, requesting clarification of the record with respect to application number and filing date for the above-identified application.

The petition under 37 CFR 1.181 is **GRANTED**.

Application papers for an invention titled, "VERTICAL CHANNEL TRANSISTORS AND MEMORY DEVICES INCLUDING VERTICAL CHANNEL TRANSISTORS, were filed on February 8, 2007. An itemized postcard receipt accompanied the application papers. The Office returned the postcard receipt to applicants. An Office generated barcode was affixed to the postcard receipt. It informed applicants that the application papers had been assigned Application No. 11/703,712 and the date of receipt of the application papers was February 8, 2007.

On July 23, 2007 the Office mailed a formal filing receipt for the above-identified invention that listed the application number as Application No. 11/801,915. The filing date of Application No. 11/801,915 was listed as February 8, 2007.

A review of Office records reveals that Application No. 11/703,712 is not currently an active application number.

It is apparent from the record that the above-identified invention was first designated as Application No. 11/703,712 and later designated as Application No. 11/801,915, with a filing date of February 8, 2007.

After the mailing of this decision, the application will be returned to Technology Center A.U. 4176 for examination in due course.

Any inquiries pertaining to this matter may be directed to the undersigned at (571) 272-3230.

Shirene Willis Brantley

Shirene Willis Brantley
Senior Petitions Attorney
Office of Petitions
Office of the Deputy Commissioner
for Patent Examination Policy

UNITED STATES PATENT AND TRADEMARK OFFICE

Commissioner for Patents
United States Patent and Trademark Office
P.O. Box 1450
Alexandria, VA 22313-1450
www.uspto.gov

K&L GATES LLP
535 SMITHFIELD STREET
PITTSBURGH PA 15222

COPY MAILED
JAN 06 2010

In re Application of	:	
Robertson et al.	:	
Application No. 11/801,957	:	DECISION GRANTING PETITION
Filed: May 11, 2007	:	UNDER 37 CFR 1.137(b)
Attorney Docket No. 070139	:	

This is a decision on the petition, filed November 24, 2009, which is being treated as a petition under 37 CFR 1.137(b) to revive the instant non-provisional application for failure to timely notify the U.S. Patent and Trademark (USPTO) of the filing of an application in a foreign country, or under a multinational treaty that requires publication of applications eighteen months after filing. *See* 37 CFR 1.137(f).

The petition is **GRANTED**.

Petitioner states that the instant nonprovisional application is the subject of an application filed in an eighteen-month publication country on January 17, 2008. However, the USPTO was unintentionally not notified of this filing within 45 days subsequent to the filing of the subject application in an eighteen-month publication country.

In view of the above, this application became abandoned pursuant to 35 U.S.C. § 122(b)(2)(B)(iii) and 37 CFR 1.213(c) for failure to timely notify the Office of the filing of an application in a foreign country or under a multilateral international agreement that requires publication of applications 18 months after filing.

A petition to revive an application abandoned pursuant to 35 U.S.C. 122(b)(2)(B)(iii) for failure to notify the USPTO of a foreign filing must be accompanied by:

> (1) the required reply which is met by the notification of such filing in a foreign country or under a multinational treaty;
> (2) the petition fee as set forth in 37 CFR 1.17(m); and
> (3) a statement that the entire delay in filing the required reply from the due date of the reply until the filing of a grantable petition was unintentional.

The instant petition has been found to be in compliance with 37 CFR 1.137(b). Accordingly, the failure to timely notify the USPTO of a foreign or international filing within 45 days after the date of filing of such foreign or international application as provided by 35 U.S.C. § 122(b)(2)(B)(iii) and 37 CFR 1.213(c) is accepted as having been unintentionally delayed.

The previous Request and Certification under 35 U.S.C. § 122(b)(2)(B)(i) has been rescinded. A Notice Regarding Rescission of Nonpublication Request which sets forth the projected publication date of April 15, 2010 accompanies this decision on petition.

It is not apparent whether the person signing the instant petition was ever given a power of attorney or authorization of agent to prosecute this patent. In accordance with 37 CFR 1.34(a), the signature appearing on the petition shall constitute a representation to the United States Patent and Trademark Office that he/she is authorized to represent the particular party in whose behalf he/she acts.

This application is being forwarded to Technology Center Art Unit 3691 for examination in due course.

Telephone inquiries concerning this decision should be directed to the undersigned at (571) 272-7751.

Joan Olszewski

Joan Olszewski
Petitions Examiner
Office of Petitions

ATTACHMENT: Notice Regarding Rescission of Nonpublication

UNITED STATES PATENT AND TRADEMARK OFFICE

UNITED STATES DEPARTMENT OF COMMERCE
United States Patent and Trademark Office
Address: COMMISSIONER FOR PATENTS
P.O. Box 1450
Alexandria, Virginia 22313-1450
www.uspto.gov

APPLICATION NUMBER	FILING OR 371(C) DATE	FIRST NAMED APPLICANT	ATTY. DOCKET NO./TITLE
11/801,957	05/11/2007	Chris Robertson	070139

CONFIRMATION NO. 5912

26285
K&L GATES LLP
535 SMITHFIELD STREET
PITTSBURGH, PA 15222

NONPUBLICATION RESCISSION LETTER

OC000000039511293

Date Mailed: 01/06/2010

Communication Regarding Rescission Of Nonpublication Request and/or Notice of Foreign Filing

Applicant's rescission of the previously-filed nonpublication request and/or notice of foreign filing is acknowledged. The paper has been reflected in the Patent and Trademark Office's (USPTO's) computer records so that the earliest possible projected publication date can be assigned.

The projected publication date is 04/15/2010.

If applicant rescinded the nonpublication request before or on the date of "foreign filing,"[1] then no notice of foreign filing is required.

If applicant foreign filed the application after filing the above application and before filing the rescission, and the rescission did not also include a notice of foreign filing, then a notice of foreign filing (not merely a rescission) is required to be filed within 45 days of the date of foreign filing. See 35 U.S.C. § 122(b)(2)(B)(iii), and Clarification of the United States Patent and Trademark Office's Interpretation of the Provisions of 35 U.S.C. § 122(b)(2)(B)(ii)-(iv), 1272 Off. Gaz. Pat. Office 22 (July 1, 2003).

If a notice of foreign filing is required and is not filed within 45 days of the date of foreign filing, then the application becomes abandoned pursuant to 35 U.S.C. § 122(b)(2)(B)(iii). In this situation, applicant should either file a petition to revive or notify the Office that the application is abandoned. See 37 CFR 1.137(f). Any such petition to revive will be forwarded to the Office of Petitions for a decision. Note that the filing of the petition will not operate to stay any period of reply that may be running against the application.

Questions regarding petitions to revive should be directed to the Office of Petitions at (571) 272-3282.

[1] Note, for purpose of this notice, that "foreign filing" means "filing an application directed to the same invention in another country, or under a multilateral international agreement, that requires publication of applications 18 months after filing".

/jolszewski/

Office of Data Management, Application Assistance Unit (571) 272-4000, or (571) 272-4200, or 1-888-786-0101

UNITED STATES PATENT AND TRADEMARK OFFICE

Commissioner for Patents
United States Patent and Trademark Office
P.O. Box 1450
Alexandria, VA 22313-1450
www.uspto.gov

JONES DAY
222 EAST 41ST ST
NEW YORK NY 100

COPY MAILED

SEP 2 0 2007

OFFICE OF PETITIONS

In re Application of	:	
Zlatanov et al.	:	
Application No. 11/801986	:	
Filing or 371(c) Date: 05/11/2007	:	
Attorney Docket Number:	:	DECISION
11420-004-999	:	ON PETITION

This is a decision on the "Petition Under 37 CFR § 1.182 in Response to Notice of Omitted Item(s) in a Nonprovisional Application," filed July 13, 2007, requesting the above-identified application be accorded a filing date of May 11, 2007,including Figures 3A and 3B, based upon the incorporation by reference of a prior application.

The petition is dismissed.

The application was filed on May 11, 2007. On August 3, 2007, the Office of Initial Patent Examination mailed a Notice of Omitted Item(s) in a Nonprovisional Application (hereinafter "Notice"), informing Applicant that the application had been accorded a filing date, however, Figures 3A – 3B described in the specification appeared to have been omitted from the application.

Applicant's assertion

Applicant responds with the present petition and avers that the omitted Figures were part of the present application based upon the inclusion of the Figures in prior application 10/663,571, the entire contents of "which application is incorporated by reference, as stated in Box 18 of the Utility Patent Application Transmittal letter as filed on May 11, 2007." Applicant includes a copy of the Figures with the present petition.

Incorporation by reference in the Transmittal Letter

The MPEP provides:

> In an application containing an explicit incorporation by reference statement in the specification or in a transmittal letter (if the transmittal letter was filed prior to September 21, 2004), a petition for the granting of a filing date may be made under 37 CFR 1.182. A petition under 37 CFR 1.182 and the required petition fee, including an amendment submitting the necessary omitted material, requesting that the necessary omitted material contained in the prior application and submitted in the amendment, be included in the continuation or divisional application based upon the incorporation by reference statement, is required in order to accord the application a filing date as of the date of deposit of the continuation or divisional application.

MPEP 201.06(c).

A review of the application file reveals that the application was not filed prior to September 21, 2004. As such, Applicant may not obtain a filing date for the omitted Figures based upon an incorporation by reference appearing in the application transmittal letter.

Incorporation by reference based upon priority claim

The MPEP 201.06(c) provides in pertinent part that:

> For applications filed on or after September 21, 2004, a claim under 35 U.S.C. 120 and 37 CFR 1.78 for benefit of a prior-filed nonprovisional application or international application designating the U.S. that was present on the filing date of the continuation or divisional application is considered an incorporation by reference of the prior-filed application as to inadvertently omitted material, subject to the conditions and requirements of 37 CFR 1.57(a). The purpose of 37 CFR 1.57(a) is to provide a safeguard for applicants when all or a portion of the specification and/or drawing(s) is (are) inadvertently omitted from an application.

This MPEP section provides for the following option:

> If a continuation or divisional application as originally filed on or after September 21, 2004 does not include an explicit incorporation by reference statement and is entitled to a filing date despite the inadvertent omission of a portion of the prior application(s), applicant may be permitted to add the omitted material by way of an amendment under 37 CFR 1.57(a). Such an amendment must be made within any time period set by the Office. See 37 CFR 1.57(a)(1).

The Manual of Patent Examining Procedure ("MPEP") also provides that

> ...37 CFR 1.57(a) was added to provide a safeguard for applicants when a page(s) of the specification, or a portion thereof, or a sheet(s) of the drawing(s), or a portion thereof, is inadvertently omitted from an application, such as through a clerical error. 37 CFR 1.57(a) applies to applications filed on or after September 21, 2004. 37 CFR 1.57(a) permits inadvertently omitted material to be added to the application by way of a later filed amendment if the inadvertently omitted portion of the specification or drawing(s) is completely contained in a prior-filed application (for which priority/benefit is claimed) even though there is no explicit incorporation by reference of the prior-filed application. *See* MPEP § 201.17 for discussion regarding 37 CFR 1.57(a). *See* MPEP § 601.01(p). (Emphasis supplied).

MPEP 201.06(c)(IV)(B).

As this application was filed after September 21, 2004, Applicant's reliance on statements in the transmittal letter to incorporate by reference the prior application is improper. Moreover, as this application is entitled to a filing date, entry of the drawing figures based on their presence in a prior application is not by way of petition. New drawings may be entered by the primary examiner without petition so long as the new drawings contain no new matter. An amendment should be submitted for consideration by the primary examiner. If applicants wish to rely on § 1.57(a)(1) to enter the drawing figures, the petitioner must submit an amendment in compliance with §§ 1.57 and 1.121 within **TWO (2) MONTHS** of the mailing date of this decision. This period is not extendable. See 37 CFR 1.181(f), 37 CFR 1.57(f), §1.57(g) and MPEP 608.01(p).

Telephone inquiries concerning this matter should be directed to the undersigned at (571-272-3232.

Derek L. Woods
Attorney
Office of Petitions

UNITED STATES PATENT AND TRADEMARK OFFICE

Commissioner for Patents
United States Patent and Trademark Office
P.O. Box 1450
Alexandria, VA 22313-1450
www.uspto.gov

SCOTT D. WATKINS
STEPTOE & JOHNSON LLP
1330 CONNECTICUT AVENUE, N.W.
WASHINGTON DC 20036

COPY MAILED

MAY 29 2009

OFFICE OF PETITIONS

In re Application of	:	
Reed et al.	:	DECISION ON PETITION
Application No. 11/802,009	:	TO WITHDRAW
Filed: May 18, 2007	:	FROM RECORD
Attorney Docket No. 88400.0002	:	

This is a decision on the Request to Withdraw as attorney or agent of record under 37 C.F.R. § 1.36(b), filed February 25, 2009.

The request is **APPROVED**.

A grantable request to withdraw as attorney/agent of record must be signed by every attorney/agent seeking to withdraw or contain a clear indication that one attorney is signing on behalf of another/others. The Office will require the practitioner(s) to certify that he, she or they have: (1) given reasonable notice to the client, prior to the expiration of the reply period, which the practitioner(s) intends to withdraw from employment; (2) delivered to the client or a duly authorized representative of the client all papers and property (including funds) to which the client is entitled; and (3) notified the client of any replies that may be due and the time frame within which the client must respond, pursuant to 37 CFR 10.40 (c).

The request was signed by Scott D. Watkins on behalf of all attorneys of record who are associated with Customer No. 27890.

All attorneys/agents associated with Customer Number 27890 have been withdrawn. Applicants are reminded that there is no attorney of record at this time.

All future correspondence will be directed to the first named inventor at the address indicated below.

There is an outstanding Office action mailed December 10, 2008 that requires a reply.

Telephone inquires concerning this decision should be directed to Petitions Examiner Joan Olszewski at (571) 272-7751. All other inquires concerning either the examination or status of the application should be directed to the Technology Center.

/Liana Walsh/
Liana Walsh
Petitions Examiner
Office of Petitions

cc: Mr. Ronald Reed / GearGuard Sports
1649 E. Kaibab Drive
Chandler, AZ 85249

UNITED STATES PATENT AND TRADEMARK OFFICE

Commissioner for Patents
United States Patent and Trademark Office
P.O. Box 1450
Alexandria, VA 22313-1450
www.uspto.gov

ROSENBERG, KLEIN & LEE
3458 ELLICOTT CENTER DRIVE-SUITE 101
ELLICOTT CITY MD 21043

COPY MAILED
JAN 14 2010

In re Application of	:	
Chen-Hsing Wang et al.	:	
Application No. 11/802,016	:	DECISION ON PETITION
Filed: May 18, 2007	:	
Attorney Docket No. **MR1331-55**	:	

This is a decision on the petition under the unintentional provisions of 37 CFR 1.137(b), filed November 20, 2009, to revive the above-identified application.

The petition is **GRANTED**.

The application became abandoned for failure to reply in a timely manner to the non-final Office action mailed, March 20, 2009, which set a shortened statutory period for reply of three (3) months. No extensions of time under the provisions of 37 CFR 1.136(a) were obtained. Accordingly, the application became abandoned on June 21, 2009.

The petition satisfies the requirements of 37 CFR 1.137(b) in that petitioner has supplied (1) the reply in the form of an amendment, (2) the petition fee of $1,620, and (3) a proper statement of unintentional delay.

Telephone inquiries concerning this decision should be directed to JoAnne Burke at (571) 272-4584.

This application is being referred to Technology Center AU 3632 for appropriate action by the Examiner in the normal course of business on the reply received.

JoAnne Burke
Petitions Examiner
Office of Petitions

UNITED STATES PATENT AND TRADEMARK OFFICE

Commissioner for Patents
United States Patent and Trademark Office
P.O. Box 1450
Alexandria, VA 22313-1450
www.uspto.gov

MAIL

NOV 10 2009

DIRECTOR'S OFFICE
TECHNOLOGY CENTER 2600

Juan Carlos A. Marquez
c/o Stites & Harbison PLLC
1199 North Fairfax Street
Suite 900
Alexandria VA 22314-1437

In re Application of	:	
YAMAMOTO, MASAAKI, et al.	:	DECISION ON REQUEST TO
Application No. 11/802,018	:	PARTICIPATE IN PATENT
Filed: May 18, 2007	:	PROSECUTION HIGHWAY
Attorney Docket No. **TSUT.0134**	:	PROGRAM AND PETITION
	:	TO MAKE SPECIAL UNDER
	:	37 CFR 1.102(d)

This is a decision on the request to participate in the Patent Prosecution Highway (PPH) program and the petition under 37 CFR 1.102(d), filed August 20, 2009, to make the above-identified application special.

The request and petition are **DISMISSED**.

A grantable request to participate in the PPH program and petition to make special require:

(1) The U.S. application must validly claim priority under 35 U.S.C. 119(a) to one or more applications filed in the JPO;
(2) Applicant must submit a copy of the allowable/patentable claim(s) from the JPO application(s) along with an English translation thereof and a statement that the English translation is accurate;
(3) All the claims in the U.S. application must sufficiently correspond or be amended to sufficiently correspond to the allowable/patentable claim(s) in the JPO application(s);
(4) Examination of the U.S. application has not begun;
(5) Applicant must submit a copy of all the office actions from each of the JPO application(s) containing the allowable/patentable claim(s) along with an English translation thereof and a statement that the English translation is accurate;
(6) Applicant must submit an IDS listing the documents cited by the JPO examiner in the JPO office action along with copies of documents except U.S. patents or U.S. patent application publications; and
(7) The required petition fee under 37 CFR 1.17(h).

The request to participate in the PPH program and petition is deficient as follows:

There is no statement that the translation of the Japanese Office action and claims are accurate.

Applicant is given a time period of **ONE MONTH or THIRTY DAYS**, whichever is longer, from the mailing date of this decision to correct the deficiencies. **NO EXTENSION OF TIME UNDER 37 CFR 1.136 IS PERMITTED.** If the deficiencies are not corrected with the time period given, the application will await action in its regular turn.

Any response to this decision must be submitted via EFS-web.

Telephone inquiries concerning this decision should be directed to Kenneth Wieder at 571-272-2986.

All other inquiries concerning the examination or status of the application should be directed to Patent Application Information Retrieval (PAIR) system.

Kenneth A. Wieder
Quality Assurance Specialist
Technology Center 2600
Communications

UNITED STATES PATENT AND TRADEMARK OFFICE

Commissioner for Patents
United States Patent and Trademark Office
P.O. Box 1450
Alexandria, VA 22313-1450
www.uspto.gov

MAIL

JAN 20 2010

DIRECTOR'S OFFICE
TECHNOLOGY CENTER 2600

Juan Carlos A. Marquez
c/o Stites & Harbison PLLC
1199 North Fairfax Street
Suite 900
Alexandria VA 22314-1437

In re Application of	:	
YAMAMOTO, MASAAKI, et al.	:	DECISION ON REQUEST TO
Application No. 11/802,018	:	PARTICIPATE IN PATENT
Filed: May 18, 2007	:	PROSECUTION HIGHWAY
Attorney Docket No. **TSUT.0134**	:	PROGRAM AND PETITION
	:	TO MAKE SPECIAL UNDER
	:	37 CFR 1.102(d)

This is a decision on the request for reconsideration to participate in the Patent Prosecution Highway (PPH) program and the petition under 37 CFR 1.102(d), filed December 4, 2009 to make the above-identified application special.

The request and petition are **GRANTED**.

A grantable request to participate in the PPH program and petition to make special require:

(1) The U.S. application must validly claim priority under 35 U.S.C. 119(a) to one or more applications filed in the JPO;
(2) Applicant must submit a copy of the allowable/patentable claim(s) from the JPO application(s) along with an English translation thereof and a statement that the English translation is accurate;
(3) All the claims in the U.S. application must sufficiently correspond or be amended to sufficiently correspond to the allowable/patentable claim(s) in the JPO application(s);
(4) Examination of the U.S. application has not begun;
(5) Applicant must submit a copy of all the office actions from each of the JPO application(s) containing the allowable/patentable claim(s) along with an English translation thereof and a statement that the English translation is accurate;
(6) Applicant must submit an IDS listing the documents cited by the JPO examiner in the JPO office action along with copies of documents except U.S. patents or U.S. patent application publications; and
(7) The required petition fee under 37 CFR 1.17(h).

The request to participate in the PPH program and petition comply with the above requirements. Accordingly, the above-identified application has been accorded "special" status.

Telephone inquiries concerning this decision should be directed to Kenneth Wieder at 571-272-2986.

All other inquiries concerning the examination or status of the application should be directed to Patent Application Information Retrieval (PAIR) system.

The application is being forwarded to the examiner for action on the merits commensurate with this decision.

Kenneth Wieder
Quality Assurance Specialist
Technology Center 2600
Communications

UNITED STATES PATENT AND TRADEMARK OFFICE

Commissioner for Patents
United States Patent and Trademark Office
P.O. Box 1450
Alexandria, VA 22313-1450
www.uspto.gov

October 21, 2008

Shinjyu Global IP
c/o GLOBAL IP COUNSELORS, LLP
1233 Twentieth Street, NW, Suite 700
Washington, DC 20036

Patent No.: 7,419,113 B2
Application No.: 11/802,040
Inventor(s): Noor Azir Bin Abd Razak, et al.
Issued: September 2, 2008
Title: **DRAG DEVICE FOR SPINNING REEL**

Re: Request for Certificate of Correction

Consideration has been given your request for the issuance of a certificate of correction for the above-identified patent under the provisions of Rule(s) 1.322 and/or 1.323.

Assignees' names and addresses (assignment data) printed in a patent, are based *solely* on information supplied in the appropriate space for identifying the assignment data, i.e., item 3 of the Issue Fee Transmittal Form PTOL-85B. Granting of a request under 37 CFR 3.81(b) is required to correct applicant's error providing ***incorrect or erroneous*** assignment data, *before* issuance of a Certificate of Correction, under 37 CFR 1.323 *(see Manual of Patent Examining Procedures (M.P.E.P) Chp.1400, sect. 1481).* This procedure is required *at any time after the issue fee is paid*, including after issuance of the patent.

In view of the foregoing, your request, in this matter, is hereby denied.

A request to correct the Assignee under 37 CFR 3.81(b) should include:

A. **the processing fee set forth in 37 CFR 1.117(h) (currently $130);**
B. a statement that the failure to include the correct assignee name on the PTOL-85B was inadvertent; and
C. a copy of the Notice of Recordation of Assignment Document, reflecting the reel and frame number where the assignment(s) is recorded and/or reflecting proof of *the date* the assignment was submitted for recordation.

In the Request, Applicant(s) may request that the file be forwarded to Certificates of Correction Branch, for issuance of a Certificate of Correction, if the Request is granted.

Any request under 37 CFR 3.81(b) should be directed to the following address or facsimile number:

By mail: Mail Stop PETITIONS
Commissioner for Patents
Post Office Box 1450
Alexandria, VA 22313-1450

By hand: Customer Service Window
Mail Stop Petitions
Randolph Building
401 Dulany Street
Alexandria, VA 22314

By fax: (571) 273-0025
ATTN: Office of Petitions

If a fee (currently $100) was previously submitted for consideration of a Request for Certificate of Correction, under CFR 1.323, to correct assignment data, no additional fee is required.

Virginia Tolbert
For Mary Diggs, Supervisor
Decisions & Certificate of Correction Branch
(703) 305-8309 or (703) **308-9390 ext 113**

vt

UNITED STATES PATENT AND TRADEMARK OFFICE

Commissioner for Patents
United States Patent and Trademark Office
P.O. Box 1450
Alexandria, VA 22313-1450
www.uspto.gov

CARLSON, GASKEY & OLDS, P.C.
400 WEST MAPLE ROAD
SUITE 350
BIRMINGHAM MI 48009

COPY MAILED

AUG 1 3 2008

OFFICE OF PETITIONS

In re Application of	:	
Modien, Russell Miles	:	
Application No. 11/802,045	:	ON PETITION
Filed: May 18, 2007	:	
Attorney Docket No. 2006P11730US01	:	

This is a decision on the petition under 37 C.F.R. § 1.137(b), filed February 29, 2008, to revive the above-identified application.

The petition is **GRANTED**.

The petition satisfies the requirements of 37 CFR 1.137(b) in that petitioner has supplied (1) the reply in the form of Replacement Drawings, (2) the petition fee, and (3) a proper statement of unintentional delay.

A courtesy copy of this decision is being mailed to the address given on the petition; however, the Office will mail all future correspondence solely to the address of record.

Telephone inquiries concerning this decision should be directed to the undersigned at (571) 272-3206.

This matter is being referred to the Office of Patent Application Processing for further processing.

Liana Walsh
Petitions Examiner
Office of Petitions

UNITED STATES PATENT AND TRADEMARK OFFICE

UNITED STATES DEPARTMENT OF COMMERCE
United States Patent and Trademark Office
Address: COMMISSIONER FOR PATENTS
P.O. Box 1450
Alexandria, Virginia 22313-1450
www.uspto.gov

APPLICATION NO.	FILING DATE	FIRST NAMED INVENTOR	ATTORNEY DOCKET NO.	CONFIRMATION NO.
11/802,083	05/18/2007	Yasushi Koyama	070112CIP	8540

23850 7590 03/22/2010
KRATZ, QUINTOS & HANSON, LLP
1420 K Street, N.W.
Suite 400
WASHINGTON, DC 20005

EXAMINER
BAKER, LORI LYNN

ART UNIT	PAPER NUMBER
3764	

MAIL DATE	DELIVERY MODE
03/22/2010	PAPER

Please find below and/or attached an Office communication concerning this application or proceeding.

The time period for reply, if any, is set in the attached communication.

UNITED STATES PATENT AND TRADEMARK OFFICE

Commissioner for Patents
United States Patent and Trademark Office
P.O. Box 1450
Alexandria, VA 22313-1450
www.uspto.gov

KRATZ, QUINTOS & HANSON, LLP
1420 K Street, N.W.
Suite 400
WASHINGTON DC 20005

In re Application of:
KOYAMA, YASUSHI
Serial No. 11/802,083
Filed: May 18, 2007
Docket: 070112CIP
Title: TRAINING APPARATUS

DECISION ON PETITION
UNDER 37 CFR § 1.181

This is a decision on the request filed March 11, 2010 under 37 CFR 1.181 requesting entry of Rule 312 amendment filed on March 11, 2010 because the re-instated dependent claims 14, 17 and 19 were dependent upon allowable generic claim 1 as permitted by 37 CFR 1.141.

The petition is **Granted.**

In finding petitioner's points of argument persuasive, the requested relief is granted. The Rule 312 Amendment filed on March 11, 2010 has been entered and allowed with the generic claim 1. Since the non-elected dependent claims have been rejoined and allowed, the original election of species requirement mailed on December 30, 2008 is now withdrawn in accordance with 37 CFR 1.141. The examiner has been requested to enter the Rule 312 Amendment and issue a supplemental notice of allowability.

The application is being forwarded to the examiner via the Supervisory Patent Examiner of Art Unit 3764 for further consideration of the Rule 312 Amendment, filed on March 11, 2010. Any inquiry regarding this decision should be directed to Henry C. Yuen, Special Programs Examiner, at (571) 272-4856.

Petition granted.

Robert Olszewski, Director
Technology Center 3700

UNITED STATES PATENT AND TRADEMARK OFFICE

UNITED STATES DEPARTMENT OF COMMERCE
United States Patent and Trademark Office
Address: COMMISSIONER FOR PATENTS
P.O. Box 1450
Alexandria, Virginia 22313-1450
www.uspto.gov

APPLICATION NO.	FILING DATE	FIRST NAMED INVENTOR	ATTORNEY DOCKET NO.	CONFIRMATION NO.
11/802,152	05/21/2007	Kye-hoon Lee	52884	9133

7590 03/06/2009
ROYLANCE, ABRAMS, BERDO & GOODMAN, L.L.P.
1300 19TH STREET, N.W.
SUITE 600
WASHINGTON,, DC 20036

EXAMINER
HJERPE, RICHARD A

ART UNIT	PAPER NUMBER
2629	

MAIL DATE	DELIVERY MODE
03/06/2009	PAPER

DECISION GRANTING PETITION UNDER 37 CFR 1.138(d)

The declaration of express abandonment is recognized

This is in response to the petition under 37 CFR 1.138(d), requesting for a refund of any previously paid search fee and excess claims fee in the above-identified application.

The petition is granted.

The express abandonment is recognized. Any previously paid search fee and excess claims fee are hereby refunded.

Telephone inquiries should be directed to the Office of Data Management at (571) 272-4200.

Betty Powell

Patent Publication Branch
Office of Data Management

Adjustment date: 03/06/2009 BPOWELL
05/22/2007 DEMMANU1 00000053 11802152
02 FC:1111 -500.00 OP
04 FC:1202 -150.00 OP

Repln. Ref: 03/06/2009 BPOWELL 0011503900
DA#:182220 Name/Number:11503901
FC: 9204 $500.00 CR

FORM PET651G (Rev. 08/07)

Repln. Ref: 03/06/2009 BPOWELL 0011530900
DA#:182220 Name/Number:11802152
FC: 9204 $650.00 CR

Repln. Ref: 03/06/2009 BPOWELL 0011530900
DA#:182220 Name/Number:11802152
FC: 9204 $650.00 CR

Docket No.: 5444-0102PUS1
(PATENT)

IN THE UNITED STATES PATENT AND TRADEMARK OFFICE

In re Patent Application of:
Dante A. RAPONI

Application No.: New 11/802180

Filed: Concurrently Herewith 5-21-07

For: A CEMENTITIOUS COMPOSITION

Confirmation No.: N/A

Art Unit: N/A 1755

Examiner: Not Yet Assigned

PETITION TO MAKE SPECIAL
UNDER 37 CFR 1.102(c)

Commissioner for Patents
P.O. Box 1450
Alexandria, VA 22313-1450

Sir:

Submitted herewith is a Petition to Make Special in the above-identified Patent application. The basis of this Petition is the age or health of the applicant.

In support of this Petition, applicant submits a copy of his birth certificate indicating he is 65 years of age or older.

Accordingly, applicant requests that this Petition to Make Special be granted and the application undergo accelerated examination.

Under 37 CFR 1.102(c), no fee is required. If necessary, the Commissioner is hereby authorized in this, concurrent, and future replies, to charge payment or credit any overpayment to

PETITION GRANTED

Birch, Stewart, Kolasch & Birch, LLP

William Krynski
Quality Assurance Specialist
Technology Center 1700
JUL 16 2007

PAGE 1/3 * RCVD AT 6/29/2007 6:09:34 PM [Eastern Daylight Time] * SVR:USPTO-EFXRF-2/20 * DNIS:2731012 * CSID:301 638 5014 * DURATION (mm-ss):02-00

UNITED STATES PATENT AND TRADEMARK OFFICE

Commissioner for Patents
United States Patent and Trademark Office
Washington, D.C. 20231
www.uspto.gov

HUNTON & WILLIAMS LLP
INTELLECTUAL PROPERTY DEPARTMENT
1900 K STREET, N.W.
SUITE 1200
WASHINGTON DC

COPY MAILED

AUG 22 2007

OFFICE OF PETITIONS

In re Application of
Garcia et al.
Application No. 11/802,235
Filed: May 21, 2007
For: CULTURE METHOD FOR OBTAINING A CLONAL POPULATION OF ANTIGEN-SPECIFIC B CELLS

: ON PETITION

This is a decision on the petition filed July 20, 2007, which is being treated as a petition under 37 CFR 1.183 requesting suspension of the requirements of 37 CFR 1.59(a) such that part of the originally filed application papers will be expunged from this file.

The petition is **granted.**

NOTICE OF INFORMAL APPLICATION

This application is informal for the reason(s) given below. Correction of the noted informality is required within TWO MONTHS of this mailing to avoid abandonment. Extensions of time are available under the provisions of 37 CFR 1.136(a).

The first executed declaration in the application, filed July 20, 2007 executes the application as filed May 21, 2007, rather than the application papers as amended July 20, 2007. A new oath or declaration is required that executes the application as amended July 20, 2007

With respect to the petition:

The petition asserts that the specification, including Example 9, and originally filed drawing Figures 5 (a) and (b) contain confidential proprietary material. Petitioner submits an amdended specification and renumbered drawing figures consistent with the expunged material.

It is agreed that it would be in the interests of justice to close the originally filed application papers containing or referring to the material in question, and also remove such from the listing of publicly available documents for this Image File Wrapper (IFW). In a paper file the page(s) or document would have been physically removed from the file wrapper; in the IFW realm the corresponding action(s) is to close the document and also remove such from the

listing of "Public[ly available] Documents." The USPTO will further process all the application papers filed July 20, 2007; the originally filed papers will not be further treated or relied upon by the USPTO.

It is noted that petitioner will maintain the material during the enforceable life of any ensuing patent claiming benefit of this application.

This favorable decision should not be construed as an indication that this office has made a determination that the amended application papers satisfy *e.g.*, 35 U.S.C. § 112.

This application is being referred to the office of Initial Patent Examination to process the application papers filed July 20, 2007

Telephone inquiries relevant to this decision should be directed to the undersigned at (571) 272-3217.

Brian Hearn
Petitions Examiner
Office of Petitions

UNITED STATES PATENT AND TRADEMARK OFFICE

Commissioner for Patents
United States Patent and Trademark Office
P.O. Box 1450
Alexandria, VA 22313-1450
www.uspto.gov

Yen Jung Sung
21-80 38 St, #C8
Astoria NY 11105

COPY MAILED
MAR 01 2010

In re Application of
Wei-Chen Jau
Application No. 11/802,242
Filing Date: May 21, 2007
Attorney Docket No. **JYO-011-JY0660**

DECISION ON PETITION

This is a decision on the renewed petition under the unintentional provisions of 37 CFR 1.137(b), filed December 18, 2009, to revive the above-identified application.

The petition is **GRANTED**.

The application became abandoned for failure to reply in a timely manner to the Notice to File Missing Parts of Nonprovisional Application (Notice), mailed June 21, 2007. The Notice set a period for reply of two (2) months from the mail date of the Notice. No extensions of time under the provisions of 37 CFR 1.136(a) were obtained. Accordingly, the application became abandoned on August 22, 2007.

The petition satisfies the requirements of 37 CFR 1.137(b) in that petitioner has supplied (1) the reply in the form of the required fees, (2) the petition fee of $810 (3) a proper statement of unintentional delay.

It is not apparent whether the person signing the statement of unintentional delay was in a position to have firsthand or direct knowledge of the facts and circumstances of the delay at issue. Nevertheless, such statement is being treated as having been made as the result of a reasonable inquiry into the facts and circumstances of such delay. See 37 CFR 10.18(b) and Changes to Patent Practice and Procedure; Final Rule Notice, 62 Fed. Reg. 53131, 53178 (October 10, 1997), 1203 Off. Gaz. Pat. Office 63, 103 (October 21, 1997). In the event that such an inquiry has not been made, petitioner must make such an inquiry. If such inquiry results in the discovery that it is not correct that the entire delay in filing the required reply from the due date for the reply until the filing of a grantable petition pursuant to 37 CFR 1.137(b) was unintentional, petitioner must notify the Office.

Telephone inquiries concerning this decision should be directed to JoAnne Burke at 571-272-4584.

This application is being referred to the Office of Patent Application Processing.

JoAnne Burke
Petitions Examiner
Office of Petitions

UNITED STATES PATENT AND TRADEMARK OFFICE

Commissioner for Patents
United States Patent and Trademark Office
P.O. Box 1450
Alexandria, VA 22313-1450
www.uspto.gov

COPY MAILED
JUN 03 2008

NIXON & VANDERHYE, PC
901 NORTH GLEBE ROAD,
11TH FLOOR
ARLINGTON VA 22203

In re Application of	:	
Arthur, et al.	:	
Application No. 11/802,247	:	DECISION
Filed/Deposited: 21 May, 2007	:	
Attorney Docket No. 117-630	:	

This is a decision on the "Petition in Response to Notice to File Missing Parts ..." filed on 22 August, 2007, and properly considered under 37 C.F.R. §1.53.

The Office regrets the delay in addressing the matter—the petition was presented to the attorneys in the Office of Petitions only at this writing.

For the reasons set forth below, the petition under 37 C.F.R. §1.53 is **GRANTED**.

BACKGROUND

The instant application was deposited on 21 May, 2007.

On 27 June, 2007, the Office of Patent Application Processing (OPAP) (formerly the Office of Initial Patent Examination (OIPE)) mailed a Notice to File Missing Parts (*inter alia* oath/declaration, fees, including therein a Notice of Omitted Items (to wit: FIG. 7 described in the specification).

Thus, the application had been accorded a filing date, but without the above-referenced drawing/figure.

OIPE indicated that Petitioner might:

- contend via petition that the drawing/figure was present upon deposit, and so evidence that condition with the proper supporting documentation (i.e., a date stamped receipt card (see: MPEP §503)) along with a copy of the drawing; or

- submit the drawing and accept the date of that submission as the filing date; or

- accept the application as filed.

OIPE set a two- (2-) month period for reply.

On 22 August, 2007, Petitioner submitted the instant petition, including therewith, *inter alia*, what is averred to be true copies of FIG. 7 described in the specification and averred to be present on deposit on 21 May, 2007, along with a copy of Petitioner's date-stamped ("MAY 21 2007") receipt card.

ANALYSIS

A search of the official file reveals that:

- on 21 May, 2007, Petitioner deposited the instant application;

- the Office record appears, as discussed hereinabove, to have reflected that the drawing/figure, FIG. 7 described in the specification, was missing upon deposit;

- the date-stamped receipt card evidences—in pertinent part—the following:

***

10 Sheets of Drawings Formal (Emphasis supplied)

***

It is noted that the sheets previously revealed to be present are numbered sequentially 1/10 through 10/10 and there are no duplicate sheets, and the sheet submitted as containing FIG. 7 described in the specification is numbered 7/10.

Because Petitioner's receipt card adequately itemized the contents of the application as to the elements deposited, it is concluded that the application, including cover plus 71 pages of specification (description, claims and abstract) and 10 sheets of drawings, was deposited with the Office on 21 May, 2007, and one sheet of drawings, 7/10 described in the specification, subsequently was misplaced in the Office.

Accordingly, the application, including cover plus 71 pages of specification (description, claims and abstract) and 10 sheets of drawings including sheet 7 of 10 (7/10) containing FIG. 7 described in the specification, is entitled to a filing date of 21 May, 2007.

The Notice mailed 27 June, 2007, was sent in error to the extent that it reflected the omission of FIG. 7 described in the specification, and is hereby **vacated** to the extent that it stated that the application was filed without FIG. 7 described in the specification.

CONCLUSION

The petition is **granted**; the petition fee waived and appears was not charged—should Petitioner later find that a fee was charged, Petitioner should send a refund request to Office of Finance with a copy of this decision.

This application is released to OPAP for further processing with a filing date of 21 May, 2007, for the entire application including cover plus 71 pages of specification (description, claims and abstract) and ten (10) sheets of drawings, with pages cover plus 1-71 of the specification (description, claims, abstract), and 10 sheets of drawings described in the specification, using:

- **cover plus 71 pages of specification (description, claims abstract) and 9 sheets of drawings ((1/10 through and including 6/10 and 8/10 through and including10/10) deposited on 21 May, 2007; and**
- **One (1) sheets of drawings (FIG. 7) sheet 7/10) deposited on 22 August, 2007; and further,**

with direction to OPAP to correct Office records and provide to Petitioner a corrected filing receipt setting forth a filing date of 21 May, 2007, and reflecting therein that cover plus 71 pages of specification (description and claims) and 10 sheets of drawings were present on filing.

While telephone inquiries regarding this decision may be directed to the undersigned at (571) 272-3214, it is noted that all practice before the Office is in writing (see: 37 C.F.R. §1.2[1]) and the proper authority for action on any matter in this regard are the statutes (35 U.S.C.), regulations (37 C.F.R.) and the commentary on policy (MPEP). Therefore, no telephone discussion may be controlling or considered authority for Petitioner's/Caller's action(s).

John J. Gillon, Jr.
Senior Attorney
Office of Petitions

[1] The regulations at 37 C.F.R. §1.2 provide:1

§1.2 Business to be transacted in writing.
All business with the Patent and Trademark Office should be transacted in writing. The personal attendance of applicants or their attorneys or agents at the Patent and Trademark Office is unnecessary. The action of the Patent and Trademark Office will be based exclusively on the written record in the Office. No attention will be paid to any alleged oral promise, stipulation, or understanding in relation to which there is disagreement or doubt.

UNITED STATES PATENT AND TRADEMARK OFFICE

Commissioner for Patents
United States Patent and Trademark Office
P.O. Box 1450
Alexandria, VA 22313-1450
www.uspto.gov

FOLEY AND LARDNER LLP
SUITE 500
3000 K STREET NW
WASHINGTON DC 20007

COPY MAILED

JUN 2 0 2008

OFFICE OF PETITIONS

In re Application of

YADAV, Tapesh
Application No. 11/802,256
Filed: May 21, 2007
Attorney Docket No. **037768-0267**

DECISION ON PETITION
TO WITHDRAW
FROM RECORD

This is a decision on the Request to Withdraw as attorney or agent of record under 37 C.F.R. § 1.36(b), filed May 05, 2008.

The request is **APPROVED**.

A grantable request to withdraw as attorney/agent of record must be signed by every attorney/agent seeking to withdraw or contain a clear indication that one attorney is signing on behalf of another/others. A request to withdraw will not be approved unless at least 30 (thirty) days would remain between the date of approval and the later of the expiration date of a time to file a response or the expiration date of the maximum time period which can be extended under 37 C.F.R. § 1.136(a).

The request was signed by Stephen Maebius on behalf of all attorneys of record who are associated with customer No. 22428. All attorneys/agents associated with the Customer Number 22428 have been withdrawn. Applicant is reminded that there is no attorney of record at this time.

The request to change the correspondence of record is not acceptable as the requested correspondence address is not that of: (1) the first named signing inventor; or (2) an intervening assignee of the entire interest under 37 C.F.R 3.71. All future communications from the Office will be directed to the first named signing inventor at the first copied address below until otherwise properly notified by the applicant.

Telephone inquiries concerning this decision should be directed to Tredelle Jackson at 571-272-2783.

Tredelle D. Jackson
Petitions Examiner
Office of Petitions

cc: **TAPESH YADAV**
8724 SKYLAND DRIVE
LONGMONT CO 80503

cc: **MS. DIANE MEYERS**
PPG, INC.
ONE PPG PLACE
39TH FLOOR
PITTSBURGH PA 15272

UNITED STATES PATENT AND TRADEMARK OFFICE

Commissioner for Patents
United States Patent and Trademark Office
P.O. Box 1450
Alexandria, VA 22313-1450
www.uspto.gov

ATTN: MAQUITA WONG
THE HONG KNOG POLYTECHNIC UNIVERSITY
SUITE 600, MAILBOX #119
1800 DIAGONAL ROAD
ALEXANDRIA VA 22314

COPY MAILED

NOV 0 4 2008

OFFICE OF PETITIONS

In re Application of	:	
TONG, Kai Yu et al.	:	
Application No. 11/802,267	:	DECISION ON PETITION
Filed: May 22, 2007	:	TO WITHDRAW
Attorney Docket No. **IP-406A**	:	FROM RECORD

This is a decision on the Request to Withdraw as attorney or agent of record under 37 C.F.R. § 1.36(b), filed August 21, 2008.

The request is **APPROVED**.

A grantable request to withdraw as attorney/agent of record must be signed by every attorney/agent seeking to withdraw or contain a clear indication that one attorney is signing on behalf of another/others. The Office requires the practitioner(s) requesting withdrawal to certify that he, she, or they have: (1) given reasonable notice to the client, prior to the expiration of the response period, that the practitioner(s) intends to withdraw from employment; (2) delivered to the client or a duly authorized representative of the client all papers and property (including funds) to which the client is entitled; and (3) notified the client of any responses that may be due and the time frame within which the client must respond, pursuant 37 CFR 10.40(c).

The request was signed by Robert M. DeWitty, the sole attorney of record. Robert M. DeWitty has been withdrawn as attorney of record. Applicant is reminded that there is no attorney of record at this time.

All future correspondence will be directed to the first named inventor Kai Yu Tong at the address indicated below.

There are no outstanding office actions at this time.

Telephone inquiries concerning this decision should be directed to Michelle R. Eason at 571-272-4231.

Michelle R. Eason
Paralegal Specialist
Office of Petitions

cc: **KAI YU TONG**
THE HONG KONG POLYTECHNIC UNIVERSITY
HUNGHOM, KOWLOON, HONG KONG

UNITED STATES PATENT AND TRADEMARK OFFICE

Commissioner for Patents
United States Patent and Trademark Office
P.O. Box 1450
Alexandria, VA 22313-1450
www.uspto.gov

Attn: Ms. Maquita Wong
The Hong Kong Polytechnic University
1800 Diagonal Road, Suite 600
Mailbox #119
Alexandria, VA 22314

COPY MAILED

SEP 2 4 2008

OFFICE OF PETITIONS

In re Application of	:	
Kai Yu Tong et al.	:	
Application No. 11/802,273	:	DECISION ON PETITION
Filed: May 22, 2007	:	TO WITHDRAW
Attorney Docket No. IP-407A	:	FROM RECORD
	:	

This is a decision on the Request to Withdraw as attorney or agent under 37 C.F.R. § 1.36(b) or 37 C.F.R. § 10.40 filed August 21, 2008.

The request is **APPROVED**.

A grantable request to withdraw as attorney/agent of record must be signed by every attorney/agent seeking to withdraw or contain a clear indication that one attorney is signing on behalf of another/others. The Office requires the practitioner(s) requesting withdrawal to certify that he, she, or they have: (1) given reasonable notice to the client, prior to the expiration of the response period, that the practitioner(s) intends to withdraw from employment; (2) delivered to the client or a duly authorized representative of the client all papers and property (including funds) to which the client is entitled; and (3) notified the client of any responses that may be due and the time frame within which the client must respond, pursuant 37 CFR 10.40(c).

The request was signed by Robert M. DeWitty, sole attorney of record. Robert M. DeWitty has been withdrawn as attorney of record.

Applicant is reminded that there is no attorney of record at this time.

The correspondence address has been to that of the inventor at the address of record. The address changed is copied below.

Telephone inquiries concerning this decision should be directed to Kimberly Inabinet at 571-272-4618.

Kimberly Inabinet
Petitions Examiner
Office of Petitions

cc: Kai Yu Tong
The Hong Kong Polytechnic University,
Hunghom, Kowloon, Hong Kong

UNITED STATES PATENT AND TRADEMARK OFFICE

UNITED STATES DEPARTMENT OF COMMERCE
United States Patent and Trademark Office
Address: COMMISSIONER FOR PATENTS
P.O. Box 1450
Alexandria, Virginia 22313-1450
www.uspto.gov

APPLICATION NUMBER	FILING OR 371(C) DATE	FIRST NAMED APPLICANT	ATTY. DOCKET NO./TITLE
11/802,273	05/22/2007	Kai Yu Tong	IP-407A

CONFIRMATION NO. 9540

POWER OF ATTORNEY NOTICE

ATTN: Ms. Maquita Wong
The Hong Kong Polytechnic University
Suite 600, Mailbox #119
1800 Diagonal Road
Alexandria, VA 22314

OC000000032235108

Date Mailed: 09/23/2008

NOTICE REGARDING CHANGE OF POWER OF ATTORNEY

This is in response to the Power of Attorney filed 08/21/2008.

- The withdrawal as attorney in this application has been accepted. Future correspondence will be mailed to the new address of record. 37 CFR 1.33.

/kainabinet/

Office of Data Management, Application Assistance Unit (571) 272-4000, or (571) 272-4200, or 1-888-786-0101

UNITED STATES PATENT and TRADEMARK OFFICE
UNDER SECRETARY OF COMMERCE FOR INTELLECTUAL PROPERTY AND
DIRECTOR OF THE UNITED STATES PATENT AND TRADEMARK OFFICE
WASHINGTON, D.C. 20231
WWW.USPTO.GOV

JAN 1 0 2008

In re Application of	:	
Heru Budihartono	:	DECISION
Serial No.: 11/802,290	:	ON
Filed: May 22, 2007	:	PETITION
For: WHITE PRECIOUS METAL ALLOY	:	UNDER 708.02, VI

This is in response to the petition filed December 13, 2007, requesting that the above identified application be granted Special Status under Section 708.02, VI of the MPEP and 37 CFR 1.102c.

The petition has been considered and found to comply with the requirements set forth under the above noted section. Accordingly, the petition is granted.

The petition to **GRANTED**.

William Krynski, Quality Assurance Specialist
Technology Center 1700
Chemical and Materials Engineering

UNITED STATES PATENT AND TRADEMARK OFFICE

Commissioner for Patents
United States Patent and Trademark Office
P.O. Box 1450
Alexandria, VA 22313-1450
www.uspto.gov

ANTONELLI, TERRY, STOUT & KRAUS, LLP
1300 NORTH SEVENTEENTH STREET
SUITE 1800
ARLINGTON, VA 22209-3873

COPY MAILED

OCT 21 2008

OFFICE OF PETITIONS

In re Application of	:	
Yoshiaki Kawato, et al.	:	
Application No.: 11/802,297	:	ON PETITION
Filed: May 22, 2007	:	
Attorney Docket No.: 1021.43049CX1	:	

This is a decision on the petition, filed October 20, 2008, under 37 CFR 1.313(c)(2) to withdraw the above-identified application from issue after payment of the issue fee.

The petition is **GRANTED**.

The above-identified application is withdrawn from issue for consideration of a submission under 37 CFR 1.114 (request for continued examination). See 37 CFR 1.313(c)(2).

Petitioner is advised that the issue fee paid on September 10, 2008, cannot be refunded. If, however, this application is again allowed, petitioner may request that it be applied towards the issue fee required by the new Notice of Allowance.[1]

Telephone inquiries relating to this decision should be directed to the undersigned at (571) 272-3204.

The application is being referred to Technology Center AU 2627 for further processing of the request for continued examination under 37 CFR 1.114 and for consideration of the concurrently filed Information Disclosure Statement.

/SDB/

Sherry D. Brinkley
Petitions Examiner
Office of Petitions

[1] *The request to apply the issue fee to the new Notice may be satisfied by completing and returning the new Part B - Fee(s) Transmittal Form (along with any balance due at the time of submission). Petitioner is advised that the Issue Fee Transmittal Form* ***must*** *be completed and timely submitted to avoid abandonment of the application.*

UNITED STATES PATENT AND TRADEMARK OFFICE

Commissioner for Patents
United States Patent and Trademark Office
P.O. Box 1450
Alexandria, VA 22313-1450
www.uspto.gov

ARENT FOX LLP
1050 CONNECTICUT AVENUE, N.W.
SUITE 400
WASHINGTON DC 20036

COPY MAILED

OCT 12 2007

OFFICE OF PETITIONS

In re Application of
William C. Erbey et al.
Application No. 11/802,306
Filed: May 22, 2007
Attorney Docket No. 026083-00172

: DECISION ACCORDING STATUS
: UNDER 37 CFR 1.47(a)

This is in response to the petition filed September 19, 2007 under 37 CFR 1.47(a).

The petition under 37 CFR 1.47(a) is **GRANTED**.

The above-identified application was filed on May 22, 2007, without an executed oath or declaration. Accordingly, on June 19, 2007, a "Notice To File Missing Parts of Application" was mailed, requiring *inter alia* a properly executed oath or declaration.

In response, the instant petition under 37 CFR 1.47(a) filed with a one month extension of time request was filed arguing that joint Bryan Hurley cannot be located or refuses to sign the oath or declaration and thus by his actions, to cooperate with the filing of the instant application.

A grantable petition under 37 CFR 1.47(a) requires: (1) proof that the non-signing inventor cannot be reached or refuses to sign the oath or declaration after having been presented with the application papers (specification, claims and drawings); (2) an acceptable oath or declaration in compliance with 35 U.S.C. §§ 115 and 116; (3) the petition fee; and (4) a statement of the last known address of the non-signing inventor.

The petition bears proof that the application papers were forwarded to Mr. Hurley at the last known address, but that to date, he has not returned an executed copy of the oath or declaration.

The above-identified application and papers have been reviewed and found in compliance with 37 CFR 1.47(a). In view thereof, this application is hereby accorded Rule 1.47(a) status.

It should be noted that on the application transmittal Andy Combs is listed as a fourth

inventor. However, it is the first executed Oath or declaration that sets inventorship. Accordingly, Andy Combs has been removed as an inventor.

Thus, as provided in Rule 1.47c, this Office will forward notice of this application's filing to the non-signing inventor at the address given in the petition. Notice of the filing of this application will also be published in the Official Gazette.

This matter is being referred to the Office of Patent Application Processing for further pre-examination processing.

Telephone inquiries concerning this matter may be directed to the undersigned Petitions Attorney at (571) 272-3212.

Patricia Faison-Ball

Patricia Faison-Ball
Senior Petitions Attorney
Office of Petitions

UNITED STATES PATENT AND TRADEMARK OFFICE

Commissioner for Patents
United States Patent and Trademark Office
P.O. Box 1450
Alexandria, VA 22313-1450
www.uspto.gov

ARENT FOX LLP
1050 CONNECTICUT AVENUE, N.W.
SUITE 400
WASHINGTON, DC 20036

COPY MAILED

JAN 3 1 2008

OFFICE OF PETITIONS

In re Application of	:	
Erbey et al.	:	
Application No. 11/802,308	:	Decision According Status
Filed: May 22, 2007	:	Under 37 CFR 1.47(a)
Attorney Docket No. 026083-00168	:	
For: Method and System for Mortgage	:	
Exchange	:	

This is a decision on the petition under 37 CFR 1.47(a), filed September 28, 2007.

The petition is **granted**.

The above-identified application and papers have been reviewed and found in compliance with 37 CFR 1.47(a). This application is hereby accorded Rule 1.47(a) status.

As provided in Rule 1.47(c), this Office will forward notice of this application's filing to the non-signing inventor at the address given in the petition. Notice of the filing of this application will also be published in the Official Gazette.

The Office of Patent Application Processing will be informed of the instant decision so that it may continue to prepare the application for examination.

Telephone inquiries regarding this communication should be directed to Petitions Attorney Steven Brantley at (571) 272-3203.

Charles Steven Brantley
Senior Petitions Attorney
Office of Petitions

UNITED STATES PATENT AND TRADEMARK OFFICE

UNITED STATES DEPARTMENT OF COMMERCE
United States Patent and Trademark Office
Address: COMMISSIONER FOR PATENTS
P.O. Box 1450
Alexandria, Virginia 22313-1450
www.uspto.gov

APPLICATION NO.	FILING DATE	FIRST NAMED INVENTOR	ATTORNEY DOCKET NO.	CONFIRMATION NO.
11/802,339	05/22/2007	Ki-bum Kim	52589	9707

7590 10/23/2008
ROYLANCE, ABRAMS, BERDO & GOODMAN, L.L.P.
1300 19TH STREET, N.W.
SUITE 600
WASHINGTON,, DC 20036

EXAMINER
BOST, DWAYNE D

ART UNIT	PAPER NUMBER
2617	

MAIL DATE	DELIVERY MODE
10/23/2008	PAPER

DECISION GRANTING PETITION UNDER 37 CFR 1.138(d)

The declaration of express abandonment is recognized

This is in response to the petition under 37 CFR 1.138(d), requesting for a refund of any previously paid search fee and excess claims fee in the above-identified application.

The petition is granted.

The express abandonment is recognized. Any previously paid search fee and excess claims fee are hereby refunded.

Telephone inquiries should be directed to the Office of Data Management at (571) 272-4200.

Nioni Farmer

Patent Publication Branch
Office of Data Management

Refund Ref:
10/23/2008 NFARMER 0000164852

CHECK Refund Total: $650.00

Adjustment date: 10/23/2008 NFARMER
05/23/2007 DEMMANU1 00000066 11802339
02 FC:1111 -500.00 OP
04 FC:1202 -150.00 OP

FORM PET651G (Rev. 08/07)

UNITED STATES PATENT AND TRADEMARK OFFICE

UNITED STATES DEPARTMENT OF COMMERCE
United States Patent and Trademark Office
Address: COMMISSIONER FOR PATENTS
P.O. Box 1450
Alexandria, Virginia 22313-1450
www.uspto.gov

JACOBSON HOLMAN PLLC
400 SEVENTH STREET N.W.
SUITE 600
WASHINGTON, DC 20004

Mail Date: 04/21/2010

Applicant	: Yang Cong	: DECISION ON REQUEST FOR
Patent Number	: 7641005	: RECALCULATION of PATENT
Issue Date	: 01/05/2010	: TERM ADJUSTMENT IN VIEW
Appliction No	: 11/802,341	: OF WYETH AND NOTICE OF INTENT TO
Filed	: 05/22/2007	: ISSUE CERTIFICATE OF CORRECTION
		:

The Request for Recalculation is **GRANTED** to the extent indicated.

The patent term adjustment has been determined to be **167** days. The USPTO will *sua sponte* issue a certificate of correction reflecting the amount of PTA days determined by the recalculation.

Prior to the issuance of the certificate of correction, the USPTO will afford patentee an opportunity to be heard and request reconsideration. Accordingly, patentee has **one month or thirty (30) days**, whichever is longer, to file a request for reconsideration of this patent term adjustment calculation. See 35 U.S.C. 154(b)(3)(B)(ii) and 37 CFR 1.322(a)(4). No extensions of time will be granted under 37 CFR 1.136.

Patentee should use document code PET.OP if electronically filing a request for reconsideration of this patent term adjustment calculation. The patentee must also include the information required by 37 CFR 1.705(b)(2) and the fee required by 37 CFR 1.18(e). If patentee does not file a timely request for reconsideration of this patent term adjustment calculation including the information required by 37 CFR 1.705(b)(2) and the fee required by 37 CFR 1.18(e), the USPTO will issue a certificate of correction reflecting the PTA determination noted above.

Patentee should be aware that in order to preserve the right to review in the United States District Court for the District of Columbia of the USPTO patent term adjustment determination, patentee must ensure that he or she also take the steps required under 35 U.S.C. 154(b)(4)(A) in a timely manner. Nothing in the request for recalculation should be construed as providing an alternative time frame for commencing a civil action under 35 U.S.C. 154(b)(4)(A).

Any questions concerning this decision should be directed to the Office of Patent Legal Administration at 571-272-7702.

UNITED STATES PATENT AND TRADEMARK OFFICE

Commissioner for Patents
United States Patent and Trademark Office
P.O. Box 1450
Alexandria, VA 22313-1450
www.uspto.gov

RABIN & Berdo, PC
1101 14TH STREET, NW
SUITE 500
WASHINGTON DC 20005

COPY MAILED
FEB 16 2010

In re Application of	:	
Kung-Hao Chang et al.	:	
Application No. 11/802,350	:	DECISION GRANTING PETITION
Filed: May 22, 2007	:	UNDER 37 CFR 1.313(c)(2)
Attorney Docket No. SUND 532C1	:	

This is a decision on the petition under 37 CFR 1.313(c)(2), filed, February 12, 2010 to withdraw the above-identified application from issue after payment of the issue fee.

The petition is **GRANTED**.

The above-identified application is withdrawn from issue for consideration of a submission under 37 CFR 1.114 (request for continued examination). *See* 37 CFR 1.313(c)(2).

Petitioner is advised that the issue fee paid on January 6, 2010 cannot be refunded. If, however, this application is again allowed, petitioner may request that it be applied towards the issue fee required by the new Notice of Allowance.[1]

Telephone inquiries should be directed to Terri Johnson at (571) 272-2991.

This application is being referred to Technology Center AU 2823 for processing of the request for continued examination under 37 CFR 1.114 and for consideration of the concurrently filed amendment and information disclosure statement.

Terri Johnson
Petitions Examiner
Office of Petitions

---

[1] *The request to apply the issue fee to the new Notice may be satisfied by completing and returning the new Part B – Fee(s) Transmittal Form (along with any balance due at the time of submission). Petitioner is advised that the Issue Fee Transmittal Form* ***must*** *be completed and timely submitted to avoid abandonment of the application.*

UNITED STATES PATENT AND TRADEMARK OFFICE

UNITED STATES DEPARTMENT OF COMMERCE
United States Patent and Trademark Office
Address: COMMISSIONER FOR PATENTS
P.O. Box 1450
Alexandria, Virginia 22313-1450
www.uspto.gov

APPLICATION NO.	FILING DATE	FIRST NAMED INVENTOR	ATTORNEY DOCKET NO.	CONFIRMATION NO.
11/802,402	05/22/2007	Soon-ho KIM	1030681-001063	1211

7590 05/15/2009
BUCHANAN, INGERSOLL & ROONEY PC
POST OFFICE BOX 1404
ALEXANDRIA, VA 22313-1404

EXAMINER
SINCLAIR, DAVID M

ART UNIT	PAPER NUMBER
2831	

NOTIFICATION DATE	DELIVERY MODE
05/15/2009	ELECTRONIC

DECISION DISMISSING PETITION UNDER 37 CFR 1.138(d)

The declaration of express abandonment will not be recognized

This is in response to the petition under 37 CFR 1.138(d), requesting for a refund of any previously paid search fee and excess claims fee in the above-identified application.

The petition is dismissed.

The express abandonment will **not** be recognized for the reason(s) indicated below:

1. ☒ The petition was not filed in sufficient time to permit the appropriate officials to recognize the abandonment before an examination has been made of the application. See 37 CFR 1.138(d).

2. ☐ The petition was not signed by a party authorized by 37 CFR 1.33(b)(1), (3) or (4).

3. ☐ The application is not an application filed under 35 U.S.C. 111(a) on or after December 8, 2004.

4. ☐ The petition for express abandonment under 1.138(d) is dismissed because the applicant did not pay any search fee and excess claims fees in the above-identified application.

Telephone inquiries should be directed to the Office of Data Management at (571) 272-4200.

Betty Powell

Patent Publication Branch
Office of Data Management

FORM PET651D (Rev. 08/07)

UNITED STATES PATENT AND TRADEMARK OFFICE

UNITED STATES DEPARTMENT OF COMMERCE
United States Patent and Trademark Office
Address: COMMISSIONER FOR PATENTS
P.O. Box 1450
Alexandria, Virginia 22313-1450
www.uspto.gov

APPLICATION NO.	FILING DATE	FIRST NAMED INVENTOR	ATTORNEY DOCKET NO.	CONFIRMATION NO.
11/802,421	05/22/2007	Hayato Otomo	ARC-4105-112	1632

7590 03/30/2009
NIXON & VANDERHYE, PC
901 NORTH GLEBE ROAD, 11TH FLOOR
ARLINGTON, VA 22203

EXAMINER
KUNTZ, CURTIS A

ART UNIT	PAPER NUMBER
2614	

MAIL DATE	DELIVERY MODE
03/30/2009	PAPER

DECISION GRANTING PETITION UNDER 37 CFR 1.138(d)

The declaration of express abandonment is recognized

This is in response to the petition under 37 CFR 1.138(d), requesting for a refund of any previously paid search fee and excess claims fee in the above-identified application.

The petition is granted.

The express abandonment is recognized. Any previously paid search fee and excess claims fee are hereby refunded.

Telephone inquiries should be directed to the Office of Data Management at (571) 272-4200.

Betty Powell

Patent Publication Branch
Office of Data Management

Adjustment date: 03/27/2009 BPOWELL
07/16/2007 DEMMANUI 00000084 11802421
03 FC:1111 -500.00 OP

Adjustment date: 03/27/2009 BPOWELL
07/16/2007 DEMMANUI 00000084 11802421
03 FC:1111 -500.00 OP

FORM PET651G (Rev. 08/07)

Refund Ref:
03/2772009 0030068222

Credit Card Refund Total: $500.00

Am Exp..: XXXXXXXXXXX2021

UNITED STATES PATENT AND TRADEMARK OFFICE

Commissioner for Patents
United States Patent and Trademark Office
P.O. Box 1450
Alexandria, VA 22313-1450
www.uspto.gov

COPY MAILED

JUL 06 2007

OFFICE OF PETITIONS

LITMAN LAW OFFICES, LTD.
P.O. BOX 15035
CRYSTAL CITY STATION
ARLINGTON, VA 22215

In re Application of

Yvonne MCCLORE
Application No. 11/802,428
Filed: May 22, 2007
Attorney Docket No. 28429.00

DECISION ON PETITION
TO MAKE SPECIAL UNDER
37 CFR 1.102(c)(1)

This is a decision on the petition under 37 CFR 1.102(c)(1), filed May 22, 2007, to make the above-identified application special based on applicant's age as set forth in M.P.E.P. § 708.02, Section IV.

The petition is **GRANTED**.

A grantable petition to make an application special under 37 CFR 1.102(c)(1) and MPEP § 708.02, Section IV: Applicant's Age must be accompanied by evidence showing that at least one of the applicants is 65 years of age, or more, such as a birth certificate or a statement by applicant. No fee is required

The instant petition includes a declaration statement signed by applicant. Accordingly, the above-identified application has been accorded "special" status.

Telephone inquiries concerning this decision should be directed to Diane Goodwyn at 571-272-6735.

This application is being referred to the Office Initial Patent Examination for processing. This application will be accorded "special" status when pre-examination processing is done.

April Wise
Petitions Examiner
Office of Petitions

UNITED STATES PATENT AND TRADEMARK OFFICE

Commissioner for Patents
United States Patent and Trademark Office
P.O. Box 1450
Alexandria, VA 22313-1450
www.uspto.gov

ANTONELLI, TERRY, STOUT & KRAUS, LLP
1300 NORTH SEVENTEENTH STREET
SUITE 1800
ARLINGTON VA 22209-3873

COPY MAILED

APR 0 4 2008

OFFICE OF PETITIONS

In re Application of	:	
Yasushi Koubuchi et al	:	
Application No. 11/802,450	:	DECISION GRANTING PETITION
Filed: May 23, 2007	:	UNDER 37 CFR 1.313(c)(2)
Attorney Docket No. 1374.36127CV8	:	

This is a decision on the petition under 37 CFR 1.313(c)(2), filed April 3, 2008, to withdraw the above-identified application from issue after payment of the issue fee.

The petition is **GRANTED**.

The above-identified application is withdrawn from issue for consideration of a submission under 37 CFR 1.114 (request for continued examination). *See* 37 CFR 1.313(c)(2).

Petitioner is advised that the issue fee paid on March 25, 2008 cannot be refunded. If, however, this application is again allowed, petitioner may request that it be applied towards the issue fee required by the new Notice of Allowance.[1]

Telephone inquiries should be directed to the undersigned at (571) 272-3208.

This application is being referred to Technology Center AU 2814 for processing of the request for continued examination under 37 CFR 1.114 and for consideration of the concurrently filed IDS.

Karen Creasy

Karen Creasy
Petitions Examiner
Office of Petitions

---

[1] *The request to apply the issue fee to the new Notice may be satisfied by completing and returning the new Part B – Fee(s) Transmittal Form (along with any balance due at the time of submission). Petitioner is advised that the Issue Fee Transmittal Form must be completed and timely submitted to avoid abandonment of the application.*

UNITED STATES PATENT AND TRADEMARK OFFICE

Commissioner for Patents
United States Patent and Trademark Office
P.O. Box 1450
Alexandria, VA 22313-1450
www.uspto.gov

ANTONELLI, TERRY, STOUT & KRAUS, LLP
1300 NORTH SEVENTEENTH STREET
SUITE 1800
ARLINGTON, VA 22209-3873

COPY MAILED

DEC 0 4 2008

OFFICE OF PETITIONS

In re Application of	:	
Kakizaki et al.	:	
Application No. 11/802,453	:	ON PETITION
Filed: May 23, 2007	:	
Attorney Docket No. 520.41122VX1	:	

This is a decision on the petition under the unintentional provisions of 37 CFR 1.137(b), filed November 6, 2008, to revive the above-identified application.

The petition is **GRANTED**.

The application became abandoned for failure to timely file a reply within the meaning of 37 CFR 1.113 to the final Office action of April 15, 2008. The proposed reply required for consideration of a petition to revive must be a Notice of Appeal (and appeal fee required by 37 CFR 41.20(b)(2), an amendment that prima facie places the application in condition for allowance, a Request for Continued Examination and submission (37 CFR 1.114), or the filing of a continuing application under 37 CFR 1.53(b). See MPEP 711.03(c)(II)(A)(2). In view of the 1-month extension of time filed August 15, 2008, the date of abandonment of this application is August 16, 2008.

The petition satisfies the requirements of 37 CFR 1.137(b) in that petitioner has supplied (1) the reply in the form of a Request for Continued Examination (RCE) and fee of $810, and the submission required by 37 CFR 1.114, (2) the petition fee of $1,620, and (3) an adequate statement of unintentional delay.

Telephone inquiries concerning this decision should be directed to Alicia Kelley at (571) 272-6059.

This application is being referred to Technology Center AU 2613 for processing of the RCE and for appropriate action by the Examiner in the normal course of business in accordance with 37 CFR 1.114.

/SDB/

Sherry D. Brinkley
Petitions Examiner
Office of Petitions

UNITED STATES PATENT AND TRADEMARK OFFICE

UNITED STATES DEPARTMENT OF COMMERCE
United States Patent and Trademark Office
Address: COMMISSIONER FOR PATENTS
P.O. Box 1450
Alexandria, Virginia 22313-1450
www.uspto.gov

APPLICATION NO.	FILING DATE	FIRST NAMED INVENTOR	ATTORNEY DOCKET NO.	CONFIRMATION NO.
11/802,488	05/23/2007	Yasuo Funato	008312-0361477	1295

7590 09/11/2009
PILLSBURY WINTHROP SHAW PITTMAN, LLP
P.O. BOX 10500
MCLEAN, VA 22102

EXAMINER
LEE, THOMAS C

ART UNIT	PAPER NUMBER
2115	

MAIL DATE	DELIVERY MODE
09/11/2009	PAPER

DECISION GRANTING PETITION UNDER 37 CFR 1.138(d)

The declaration of express abandonment is recognized

This is in response to the petition under 37 CFR 1.138(d), requesting for a refund of any previously paid search fee and excess claims fee in the above-identified application.

The petition is granted.

The express abandonment is recognized. Any previously paid search fee and excess claims fee are hereby refunded.

Telephone inquiries should be directed to the Office of Data Management at (571) 272-4200.

Nioni Farmer

Patent Publication Branch
Office of Data Management

Adjustment date: 09/11/2009 NFARMER
05/24/2007 DEMMAHU1 00000064 033975 11802488
02 FC:1111 500.00 CR

FORM PET651G (Rev. 08/07)

UNITED STATES PATENT AND TRADEMARK OFFICE

Commissioner for Patents
United States Patent and Trademark Office
P.O. Box 1450
Alexandria, VA 22313-1450
www.uspto.gov

COPY MAILED

MAY 07 2009

OFFICE OF PETITIONS

DUANE MORRIS LLP - PHILADELPHIA
IP DEPARTMENT
30 SOUTH 17TH STREET
PHILADELPHIA PA 19103-4196

In re Application of

ADEJARE, Adeboye
Application No. 11/820,524
Filed: June 19, 2007
Attorney Docket No. **B3497-00098**

DECISION ON PETITION
TO WITHDRAW
FROM RECORD

This is a decision on the Request to Withdraw as attorney or agent of record under 37 C.F.R. § 1.36(b), filed April 07, 2009.

The request is **APPROVED**.

A grantable request to withdraw as attorney/agent of record must be signed by every attorney/agent seeking to withdraw or contain a clear indication that one attorney is signing on behalf of another/others. The Office requires the practitioner(s) requesting withdrawal to certify that he, she, or they have: (1) given reasonable notice to the client, prior to the expiration of the response period, that the practitioner(s) intends to withdraw from employment; (2) delivered to the client or a duly authorized representative of the client all papers and property (including funds) to which the client is entitled; and (3) notified the client of any responses that may be due and the time frame within which the client must respond, pursuant 37 CFR 10.40(c).

The request was signed by Gary Colby on behalf of all attorneys of record who are associated with customer No. 08933. All attorneys/agents associated with the Customer Number 08933 have been withdrawn. Applicant is reminded that there is no attorney of record at this time.

All future correspondence will be directed to the first named inventor Adeboye Adejare at the address indicated below.

Telephone inquiries concerning this decision should be directed to Tredelle Jackson at 571-272-2783.

Tredelle D. Jackson
Paralegal Specialist
Office of Petitions

cc: **DR. ADEBOYE ADEJARE**
UNIVERSITY OF THE SCIENCES IN PHILADELPHIA
600 SOUTH 43RD STREET
PHILADELPHIA PA 19104

UNITED STATES PATENT AND TRADEMARK OFFICE

Commissioner for Patents
United States Patent and Trademark Office
P.O. Box 1450
Alexandria, VA 22313-1450
www.uspto.gov

FINNEGAN, HENDERSON, FARABOW, GARRETT & DUNNER LLP
901 NEW YORK AVENUE, NW
WASHINGTON DC 20001-4413

COPY MAILED

NOV 29 2007

OFFICE OF PETITIONS

In re Application of	:	
Lee, et al.	:	
Filed: May 23, 2007	:	ON PETITION
Application No. 11/802,527	:	
Atty. Dkt. No.: 05823.0252-01000	:	

The above-identified application has been directed to the Office of Petitions for consideration of the response, filed September 27, 2007, under 37 CFR 1.57(a), filed in response to the Notice of Incomplete Nonprovisional Application (Notice), mailed September 17, 2007. This matter is being treated as a petition under 37 CFR 1.57(a). In addition, this matter is, *sua sponte*, properly treated as a petition under 37 CFR 1.53(e) to accord the above-identified application a filing date of May 23, 2007.

The application was received May 23, 2007. The Notice mailed September 27, 2007 indicated that the application had not been accorded a filing date because the application appeared to have been deposited without drawings, as required per 35 USC 113.

The Notice indicated that the filing date would be the date of receipt of all items indicated as omitted, unless otherwise indicated in the Notice. The Notice required that any assertions that the item(s) were submitted or were not necessary for a filing date, must be by way of petition (accompanied by required petition fee). The Notice set a two month non-extendible period of time for reply.

DECISION UNDER 37 CFR 1.53(e)

In accordance with 37 CFR 1.53(e)(2), any request for review of a notification pursuant to 37 CFR 1.53(e)(1), or a notification that the original application papers lack a portion of the specification or drawing(s), must be by way of a petition pursuant to this paragraph accompanied by the fee set forth in § 1.17(f).

As stated in MPEP 601.01(f), it is the practice of the PTO to treat a non-provisional application that contains at least some

is completely contained in the prior-filed application, the claim under § 1.55 or § 1.78 shall also be considered an incorporation by reference of the prior-filed application as to the inadvertently omitted portion of the specification or drawing(s)."

In accordance with 37 CFR 1.57(a)(3), "[i]f an application is not otherwise entitled to a filing date under § 1.53(b), the amendment must be by way of a petition pursuant to this paragraph accompanied by the fee set forth in § 1.17(f)."

As the instant application is entitled to a filing date, petition under 37 CFR 1.57 is not necessary.

Accordingly, the petition under 37 CFR 1.57(a) is hereby **DISMISSED AS MOOT**.

The amendment concerning the drawings submitted with the instant petition will be addressed in due course by the examiner of record in accordance with 37 CFR 1.57(a)(1).

No fee is due in connection with this matter. The petition fee submitted in connection with this matter will be refunded in due course.

The application is being returned to the Office of Patent Application Processing for further processing with a filing date of May 23, 2007 using only those application papers present on that date.

Telephone inquiries related to this decision may be directed to Petitions Attorney Alesia M. Brown at (571) 272-3205.

Supervisor, Office of Petitions for
Charles Pearson
Director
Office of Petitions

disclosure of a process or method as an application for which a drawing is not necessary for an understanding of the invention under 35 USC 113 (first sentence).

Moreover, MPEP 601.01(f) states that a nonprovisional application having at least one claim, or a provisional application having at least some disclosure, directed to the subject matter discussed above for which a drawing is usually not considered essential for a filing date, describing drawing figure(s) in the specification, but filed without drawings will be treated as an application filed without all of the drawing figures referred to in the specification as discussed in MPEP 601.01(g), so long as the application contains something that can be construed as a written description and the names of all the inventors. Should the Technology Center determine that drawings are necessary under 35 U.S.C. 113 (first sentence) the filing date issue will be reconsidered by the USPTO.

A review of the official file reveals that the instant application includes at least one method claim. As it is USPTO practice to treat a non-provisional application that contains at least some disclosure of a process or method as an application for which a drawing is not necessary, the application, as submitted, was entitled to a filing date of May 23, 2007.

Thus, the instant petition is unnecessary as the instant application was otherwise entitled to a filing date under 37 CFR 1.53(b). Accordingly, the Notice is withdrawn.

The application will be processed with only the papers present on May 23, 2007, without drawings as part of the original disclosure.

In view thereof, the petition under 37 CFR 1.53(e) to accord the above-identified application a filing date of May 23, 2007 is hereby **GRANTED**.

DECISION UNDER 37 CFR 1.57

The provisions of 37 CFR 1.57(a) provide that "if all or a portion of the specification or drawing(s) is inadvertently omitted from an application, but the application contains a claim under § 1.55 for priority of a prior-filed foreign application, or a claim under § 1.78 for the benefit of a prior-filed provisional, nonprovisional, or international application, that was present on the filing date of the application, and the inadvertently omitted portion of the specification or drawing(s)

UNITED STATES PATENT AND TRADEMARK OFFICE

Commissioner for Patents
United States Patent and Trademark Office
P.O. Box 1450
Alexandria, VA 22313-1450
www.uspto.gov

MAILED

JUN 22 2009

OFFICE OF PETITIONS

HOWREY LLP - EAST
C/O IP DOCKETING DEPARTMENT
2941 FAIRVIEW PARK DR, SUITE 200
FALLS CHURCH, VA 22042-2924

In re Application of	:	
Thomas E. Wagner, et al.	:	
Application No. 11/802,566	:	DECISION ON PETITION
Filed: May 23, 2007	:	TO WITHDRAW
Attorney Docket No. 03153.0009.CPUS01	:	FROM RECORD
	:	

This is a decision on the Request to Withdraw as attorney or agent of record under 37 C.F.R. § 1.36(b), filed April 30, 2009

The request is **NOT APPROVED**.

A grantable request to withdraw as attorney/agent of record must be signed by every attorney/agent seeking to withdraw or contain a clear indication that one attorney is signing on behalf of another/others.

The request cannot be approved because the practitioners were not appointed by customer number. In order to withdraw by customer number practitioners must have been appointed by customer number.

All future communications from the Office will continue to be directed to the above-listed address until otherwise notified by applicant.

Telephone inquiries concerning this decision should be directed to undersigned at 571-272-1642. All other inquiries concerning the examination or status of this application should be directed to the Technology Center.

/AMW/
April M. Wise
Petitions Examiner
Office of Petitions

cc: THOMAS E. WAGNER
104 GOLDEN WINGS WAY
GREER, SC 29650

UNITED STATES PATENT AND TRADEMARK OFFICE

UNITED STATES DEPARTMENT OF COMMERCE
United States Patent and Trademark Office
Address: COMMISSIONER FOR PATENTS
P.O. Box 1450
Alexandria, Virginia 22313-1450
www.uspto.gov

APPLICATION NO.	FILING DATE	FIRST NAMED INVENTOR	ATTORNEY DOCKET NO.	CONFIRMATION NO.
11/802,571	05/23/2007	Kenzou Kiyose	2018-1716	2402

7590 11/10/2009
NIXON & VANDERHYE, PC
901 NORTH GLEBE ROAD, 11TH FLOOR
ARLINGTON, VA 22203

EXAMINER
FREAY, CHARLES GRANT

ART UNIT	PAPER NUMBER
3746	

MAIL DATE	DELIVERY MODE
11/10/2009	PAPER

DECISION GRANTING PETITION UNDER 37 CFR 1.138(d)

The declaration of express abandonment is recognized

This is in response to the petition under 37 CFR 1.138(d), requesting for a refund of any previously paid search fee and excess claims fee in the above-identified application.

The petition is granted.

The express abandonment is recognized. Any previously paid search fee and excess claims fee are hereby refunded.

Telephone inquiries should be directed to the Office of Data Management at (571) 272-4200.

Patent Publication Branch
Office of Data Management

Refund Ref:
11/10/2009 2030076650

Credit Card Refund Total: $1450.00

Acct Exp: XXXXXXXXXXXX2021

Adjustment date: 11/10/2009 NFARMER
09/04/2007 MAHMED1 00000127 11802571
02 FC:1111 -500.00 DP
04 FC:1201 -400.00 DP
05 FC:1202 -550.00 DP

FORM PET651G (Rev. 08/07)

UNITED STATES PATENT AND TRADEMARK OFFICE

Commissioner for Patents
United States Patent and Trademark Office
P.O. Box 1450
Alexandria, VA 22313-1450
www.uspto.gov

TROXELL LAW OFFICE PLLC
ONE SKYLINE PLACE
SUITE 1404
5205 LEESBURG PIKE
FALLS CHURCH VA 22041

COPY MAILED

APR 23 2009

OFFICE OF PETITIONS

In re Application of	:	
Gwo-Feng Hwang, et al.	:	
Application No. 11/802,590	:	DECISION ON PETITION
Filed: May 23, 2007	:	
Attorney Docket No. 3092-740	:	

This is a decision on the petition under the unintentional provisions of 37 CFR 1.137(b), filed February 12, 2009, to revive the above-identified application.

The petition is **GRANTED**.

The application became abandoned for failure to reply in a timely manner to the Notice to File Missing Parts of Nonprovisional Application (Notice), mailed June 21, 2007. The Notice set a period for reply of two (2) months from the mail date of the Notice. No extensions of time under the provisions of 37 CFR 1.136(a) were obtained. Accordingly, the application became abandoned on August 22, 2007. The Notice of Abandonment was mailed March 4, 2008.

The petition satisfies the requirements of 37 CFR 1.137(b) in that petitioner has supplied (1) the reply in the form of the $165 statutory filing fee, $65 surcharge, $270 search fee and $110 examination fee, (2) the petition fee of $810, and (3) a proper statement of unintentional delay.

Telephone inquiries concerning this decision should be directed to Terri Williams at (571) 272-2991.

This application is being referred to the Office of Patent Application Processing for further action.

Chris Bottorff
Petitions Examiner
Office of Petitions

UNITED STATES PATENT AND TRADEMARK OFFICE

Commissioner for Patents
United States Patent and Trademark Office
P.O. Box 1450
Alexandria, VA 22313-1450
www.uspto.gov

MODIANO & ASSOCIATI
VIA MERAVIGLI, 16
MILAN 20123 IT ITALY

COPY MAILED
MAR 15 2010

In re Patent No. 7,666,159	:	
Issue Date: February 23, 2010	:	
Application No. 11/802,594	:	NOTICE
Filed: May 24, 2007	:	
Attorney Docket No. 42636/AJ/LR	:	

This is a notice regarding your request for acceptance of a fee deficiency submission under 37 CFR 1.28. On September 1, 1998, the Court of Appeals for the Federal Circuit held that 37 CFR 1.28(c) is the sole provision governing the time for correction of the erroneous payment of the issue fee as a small entity. **See DH Technology v. Synergystex International, Inc. 154 F.3d 1333, 47 USPQ2d 1865 (Fed. Cir. Sept. 1, 1998).**

The Office no longer investigates or rejects original or reissue applications under 37 CFR 1.56. **1098 Off. Gaz. Pat. Office 502 (January 3, 1989)**. Therefore, nothing in this Notice is intended to imply that an investigation was done.

Your fee deficiency submission under 37 CFR 1.28 is hereby **ACCEPTED**.

This patent is no longer entitled to small entity status. Accordingly, all future fees paid in this patent must be paid at the large entity rate.

Liana Walsh
Petitions Examiner
Office of Petitions

UNITED STATES PATENT AND TRADEMARK OFFICE

Commissioner for Patents
United States Patent and Trademark Office
P.O. Box 1450
Alexandria, VA 22313-1450
www.uspto.gov

Patton Boggs, LLP
8484 Westpark Drive
Suite 900
McLean, VA 22102

COPY MAILED

JAN 05 2009

OFFICE OF PETITIONS

In re Application of	:	
Michael C. Norris et al.	:	
Application No. 11/802,609	:	DECISION ON PETITION
Filed: May 24, 2007	:	TO WITHDRAW
Attorney Docket No. 025014.0115PTUS	:	FROM RECORD
	:	

This is a decision on the Request to Withdraw as attorney or agent under 37 C.F.R. § 1.36(b) or 37 C.F.R. § 10.40 filed November 5, 2008.

The request is **APPROVED**.

A grantable request to withdraw as attorney/agent of record must be signed by every attorney/agent seeking to withdraw or contain a clear indication that one attorney is signing on behalf of another/others. The Office requires the practitioner(s) requesting withdrawal to certify that he, she, or they have: (1) given reasonable notice to the client, prior to the expiration of the response period, that the practitioner(s) intends to withdraw from employment; (2) delivered to the client or a duly authorized representative of the client all papers and property (including funds) to which the client is entitled; and (3) notified the client of any responses that may be due and the time frame within which the client must respond, pursuant 37 CFR 10.40(c).

The request was signed by Scott A. M. Chambers on behalf of all attorneys/agents associated with customer number 32042. All attorneys/agents associated with customer number 32042 have been withdrawn.

Applicant is reminded that there is no attorney of record at this time.

The correspondence address has been changed to the first signing inventor at the address noted in the Oath and Declaration, since no assignee has properly intervened in this application. If an assignee would like to intervene in this application and receive future correspondence then the proper power of attorney documents and a statement under 37 CFR 3.73(b) must be submitted. The new address is copied below.

Telephone inquiries concerning this decision should be directed to Kimberly Inabinet at 571-272-4618.

Kimberly Inabinet
Petitions Examiner
Office of Petitions

cc: Michael C. Norris
445 Alviso Street
Santa Clara, CA 95050-5903

cc: Antara BioSciences
2257 Compass Point Laine
Reston, VA 20191

UNITED STATES PATENT AND TRADEMARK OFFICE

UNITED STATES DEPARTMENT OF COMMERCE
United States Patent and Trademark Office
Address: COMMISSIONER FOR PATENTS
P.O. Box 1450
Alexandria, Virginia 22313-1450
www.uspto.gov

APPLICATION NUMBER	FILING OR 371(C) DATE	FIRST NAMED APPLICANT	ATTY. DOCKET NO./TITLE
11/802,609	05/24/2007	Michael C. Norris	025014.0115PTUS

CONFIRMATION NO. 2486

32042
PATTON BOGGS LLP
8484 WESTPARK DRIVE
SUITE 900
MCLEAN, VA 22102

POWER OF ATTORNEY NOTICE

OC000000033896938

Date Mailed: 01/05/2009

NOTICE REGARDING CHANGE OF POWER OF ATTORNEY

This is in response to the Power of Attorney filed 11/05/2008.

- The withdrawal as attorney in this application has been accepted. Future correspondence will be mailed to the new address of record. 37 CFR 1.33.

/kainabinet/

Office of Data Management, Application Assistance Unit (571) 272-4000, or (571) 272-4200, or 1-888-786-0101

UNITED STATES PATENT AND TRADEMARK OFFICE

Commissioner for Patents
United States Patent and Trademark Office
P.O. Box 1450
Alexandria, VA 22313-1450
www.uspto.gov

ExxonMobil Research & Engineering Company
P.O. Box 900
1545 Route 22 East
Annandale NJ 08801-0900

COPY MAILED
OCT 29 2007
OFFICE OF PETITIONS

In re Application of	:	
Furman, et al.	:	DECISION GRANTING STATUS
Application No. 11/802,616	:	UNDER 37 CFR 1.47(a)
Filed: May 24, 2007	:	
Attorney Docket No. P2006J040-US2	:	

This is in response to the petition under 37 CFR 1.47(a), filed August 23, 2007 (certificate of mailing date August 21, 2007).

The petition is **GRANTED.**

Deposit account no. 05-1330 will be charged the required $200.00 Rule 47 petition fee.

Petitioners have shown that the non-signing inventor, Marco A. Duran, has constructively refused to join in the filing of the above-identified application.

The application and papers have been reviewed and found in compliance with 37 CFR 1.47(a). This application is hereby accorded Rule 1.47(a) status.

As provided in 37 CFR 1.47(c), this Office will forward notice of this application's filing to the non-signing inventor at the address given in the petition. Notice of the filing of this application will also be published in the Official Gazette.

This application is being referred to the Office of Initial Patent Examination for pre-examination processing.

Telephone inquiries regarding this decision should be directed to the undersigned at (571) 272-3230.

Shirene Willis Brantley

Shirene Willis Brantley
Senior Petitions Attorney
Office of Petitions

UNITED STATES PATENT AND TRADEMARK OFFICE

Commissioner for Patents
United States Patent and Trademark Office
P.O. Box 1450
Alexandria, VA 22313-1450
www.uspto.gov

COPY MAILED

OCT 29 2007

OFFICE OF PETITIONS

MARCO A. DURAN
2 COSBY COURT
FLEMINGTON NJ 08822

In re Application of :
Furman, et al. :
Application No. 11/802,616 : LETTER
Filed: may 24, 2007 :
Attorney Docket No. P2006J040-US2

Dear Mr. Duran:

You are named as a joint inventor in the above-identified United States patent application, filed under the provisions of 35 U.S.C. 116 (United States Code), and 37 CFR 1.47(a), Rules of Practice in Patent Cases. Should a patent be granted on the application you will be designated therein as a joint inventor.

As a named inventor you are entitled to inspect any paper in the file wrapper of the application, order copies of all or any part thereof (at a prepaid cost per 37 CFR 1.19) or make your position of record in the application. Alternatively, you may arrange to do any of the preceding through a registered patent attorney or agent presenting written authorization from you. If you care to join the application, counsel of record (see below) would presumably assist you. Joining the application would entail the filing of an appropriate oath or declaration by you pursuant to 37 CFR 1.63.

Telephone inquiries regarding this communication should be directed to the undersigned at (571) 272-3230. Requests for information regarding your application should be directed to the File Information Unit at (703) 308-2733. Information regarding how to pay for and order a copy of the application, or a specific paper in the application, should be directed to the Certification Division at (571) 272-3150 or 1 (800) 972-6382 (outside the Washington, DC area).

Shirene Willis Brantley
Senior Petitions Attorney
Office of Petitions

ATTORNEYS OF RECORD: ExxonMobil Research & Engineering Company
P.O. Box 900
1545 Route 22 East
Annandale NJ 08801-0900

UNITED STATES PATENT AND TRADEMARK OFFICE

Commissioner for Patents
United States Patent and Trademark Office
P.O. Box 1450
Alexandria, VA 22313-1450
www.uspto.gov

NIXON PEABODY LLP
401 9TH STREET NW
SUITE 900
WASHINGTON DC 20004-2128

COPY MAILED

AUG 06 2007

OFFICE OF PETITIONS

In re Application of	:	
Hajime Kimura	:	
Application No. 11/802,634	:	DECISION GRANTING PETITION
Filed: May 24, 2007	:	
Attorney Docket No. 740756-3094	:	

This is a decision on the "PETITION IN RESPONSE TO NOTICE OF OMITTED ITEM", filed June 28, 2007, to accord the above identified application a filing date of May 24, 2007, with page 78 of the specification as part of the original disclosure.

The petition is **GRANTED**.

Application papers in the above-identified application were filed on May 24, 2007. However, on June 20, 2007, the Office of Initial Patent Examination mailed applicant a "Notice to File Corrected Application Papers". Applicant was informed, *inter alia,* that the application had been accorded a filing date; however, page 78 of the specification appeared to have been omitted.

In response, applicant filed the present petition, asserting that page 78 of the specification was included with the application as filed. In support thereof, applicants included a postcard receipt identifying the application, itemizing "84 Sheets of specification, claims, and abstract" as enclosed, and bearing a USPTO date stamp of May 24, 2007.

A postcard receipt which itemizes and properly identifies the items which are being filed serves as *prima facie* evidence of receipt in the Office of all items listed thereon on the date stamped thereon by the Office.[1]

Given the basis for granting this petition, no petition fee was required, and none has been charged.

The application is being forwarded to the Office of Initial Patent Examination (OIPE) for further processing with a filing date of May 24, 2007, using the application papers received in the Office on that date and the substitute specification, including page 78, filed with the petition on June 28, 2007.

Telephone inquiries related to this decision should be directed to the undersigned at 571-272-3207.

Cliff Congo
Petitions Attorney
Office of Petitions

[1] See MPEP 503.

UNITED STATES PATENT AND TRADEMARK OFFICE

Commissioner for Patents
United States Patent and Trademark Office
P.O. Box 1450
Alexandria, VA 22313-1450
www.uspto.gov

NIXON PEABODY, LLP
401 9TH STREET, NW
SUITE 900
WASHINGTON, DC 20004-2128

MAILED

APR 13 2010

OFFICE OF PETITIONS

In re Application of :
Hajime Kimura :
Application No. 11/802,634 :
Filed: May 24, 2007 :
Attorney Docket No. 740756-3094

ON PETITION

This is a decision on the petition, filed April 9, 2010 under 37 CFR 1.313(c)(2) to withdraw the above-identified application from issue after payment of the issue fee.

The petition is **GRANTED**.

The above-identified application is withdrawn from issue for consideration of a submission under 37 CFR 1.114 (request for continued examination). See 37 CFR 1.313(c)(2).

Petitioner is advised that the issue fee paid on March 11, 2010 in the above-identified application cannot be refunded. If, however, the above-identified application is again allowed, petitioner may request that it be applied towards the issue fee required by the new Notice of Allowance.[1]

Telephone inquiries should be directed to Irvin Dingle at (571) 272-3210.

This matter is being referred to Technology Center AU 2622 for processing of the request for continued examination under 37 CFR 1.114 and for consideration of the concurrently filed Information Disclosure Statement.

/Irvin Dingle/
Irvin Dingle
Petitions Examiner
Office of Petitions

---

[1] The request to apply the issue fee to the new Notice may be satisfied by completing and returning the new Issue Fee Transmittal Form PTOL-85(b), which includes the following language thereon: Commissioner for Patents is requested to apply the Issue Fee and Publication Fee (if any) or re-apply any previously paid issue fee to the application identified above. Petitioner is advised that, whether a fee is indicated as being due or not, the Issue Fee Transmittal Form **must** be completed and timely submitted to avoid abandonment. Note the language in bold text on the first page of the Notice of Allowance and Fee(s) Due (PTOL-85).

SPE RESPONSE FOR CERTIFICATE OF CORRECTION

Paper No.: _____

DATE : 11/24/2009

TO SPE OF : ART UNIT 2817

SUBJECT : Request for Certificate of Correction for Appl. No 11/802,637.: 7,492,232

Please respond to this request for a certificate of correction within 7 days.

FOR IFW FILES:

Please review the requested changes/corrections as shown in the **COCIN** document(s) in the IFW application image. No new matter should be introduced, nor should the scope or meaning of the claims be changed.

Please complete the response (see below) and forward the completed response to scanning using document code **COCX**.

FOR PAPER FILES:

Please review the requested changes/corrections as shown in the attached certificate of correction. Please complete this form (see below) and forward it with the file to:

Certificates of Correction Branch (CofC)

Should the change(s) Be made?

RoChaun Johnson
Certificates of Correction Branch
571 272-0470

Thank You For Your Assistance

The request for issuing the above-identified correction(s) is hereby:
Note your decision on the appropriate box.

- ☒ **Approved** — **All** changes apply.
- ☐ **Approved in Part** — Specify below which changes **do not** apply.
- ☐ **Denied** — State the reasons for denial below.

Comments: _____

_____

_____

_____

_____

SPE — **Art Unit** 2817

UNITED STATES PATENT AND TRADEMARK OFFICE

UNITED STATES DEPARTMENT OF COMMERCE
United States Patent and Trademark Office
Address: COMMISSIONER FOR PATENTS
P.O. Box 1450
Alexandria, Virginia 22313-1450
www.uspto.gov

APPLICATION NO.	FILING DATE	FIRST NAMED INVENTOR	ATTORNEY DOCKET NO.	CONFIRMATION NO.
11/802,653	05/24/2007	Ji-won Kim	52969	2885

7590 03/11/2009
ROYLANCE, ABRAMS, BERDO & GOODMAN, L.L.P.
1300 19TH STREET, N.W.
SUITE 600
WASHINGTON,, DC 20036

EXAMINER
YANG, HAN

ART UNIT	PAPER NUMBER
2824	

MAIL DATE	DELIVERY MODE
03/11/2009	PAPER

DECISION GRANTING PETITION UNDER 37 CFR 1.138(d)

The declaration of express abandonment is recognized

This is in response to the petition under 37 CFR 1.138(d), requesting for a refund of any previously paid search fee and excess claims fee in the above-identified application.

The petition is granted.

The express abandonment is recognized. Any previously paid search fee and excess claims fee are hereby refunded.

Telephone inquiries should be directed to the Office of Data Management at (571) 272-4200.

Betty Powell

Patent Publication Branch
Office of Data Management

Adjustment date: 03/12/2009 BPOWELL
05/25/2007 DEMMANUI 00000065 11802653
02 FC:1111 -500.00 OP
04 FC:1202 -50.00 OP

Repln. Ref: 03/12/2009 BPOWELL 0016445800
DA#:182220 Name/Number:11441056
FC: 9204 $800.00 CR

FORM PET651G (Rev. 08/07)

Repln. Ref: 03/12/2009 BPOWELL 0017211800
DAA:182220 Name/Number:11802653
FC: 9204 $550.00 CR

UNITED STATES PATENT AND TRADEMARK OFFICE

Commissioner for Patents
United States Patent and Trademark Office
P. O. Box 1450
Alexandria, VA 22313-1450
www. uspto. gov

COPY MAILED

AUG 1 2 2008

OFFICE OF PETITIONS

HARNESS, DICKEY & PIERCE, P.L.C.
P.O. BOX 8910
RESTON, VA 20195

In re Application of :
Kang Soo Seo et al :
Application No. 11/802,659 : ON PETITION
Filed: May 24, 2007 :
Attorney Docket No. 46500-000563/US/COA

This is a decision on the petition, filed August 11, 2008 under 37 CFR 1.313(c)(2) to withdraw the above-identified application from issue after payment of the issue fee.

The petition is **GRANTED**.

The above-identified application is withdrawn from issue for consideration of a submission under 37 CFR 1.114 (request for continued examination). See 37 CFR 1.313(c)(2).

Petitioner is advised that the issue fee paid on November 21, 2007 in the above-identified application cannot be refunded. If, however, the above-identified application is again allowed, petitioner may request that it be applied towards the issue fee required by the new Notice of Allowance.[1]

Telephone inquiries should be directed to Irvin Dingle at (571) 272-3210.

This matter is being referred to Technology Center AU 2627 for processing of the request for continued examination under 37 CFR 1.114 and for consideration of the concurrently filed Information Disclosure Statement.

Irvin Dingle
Petitions Examiner
Office of Petitions

[1] The request to apply the issue fee to the new Notice may be satisfied by completing and returning the new Issue Fee Transmittal Form PTOL-85(b), which includes the following language thereon: Commissioner for Patents is requested to apply the Issue Fee and Publication Fee (if any) or re-apply any previously paid issue fee to the application identified above. Petitioner is advised that, whether a fee is indicated as being due or not, the Issue Fee Transmittal Form **must** be completed and timely submitted to avoid abandonment. Note the language in bold text on the first page of the Notice of Allowance and Fee(s) Due (PTOL-85).

UNITED STATES PATENT AND TRADEMARK OFFICE

Commissioner for Patents
United States Patent and Trademark Office
P.O. Box 1450
Alexandria, VA 22313-1450
www.uspto.gov

FOLEY & LARDNER, LLP
3000 K STREET NW, SUITE 500
WASHINGTON, DC 20007

COPY MAILED

SEP 0 8 2008

In re Application of :

HILL, et al. :
Application No. 11/802,714 :
Filed: May 24, 2007 :
Attorney Docket No. 028338-0240 :

DECISION ON PETITION TO WITHDRAW FROM RECORD

This is a decision on the Request to Withdraw as attorney or agent of record under 37 C.F.R. § 1.36(b), filed December 6, 2007.

The request is APPROVED.

A grantable request to withdraw as attorney/agent of record must be signed by every attorney/agent seeking to withdraw or contain a clear indication that one attorney is signing on behalf of another/others. A request to withdraw will not be approved unless at least 30 (thirty) days would remain between the date of approval and the later of the expiration date of a time to file a response or the expiration date of the maximum time period which can be extended under 37 C.F.R. § 1.136(a).

The request was signed by Michael D. Kaminski on behalf of all attorneys of record. All attorneys/agents associated have been withdrawn. Applicant is reminded that there is no attorney of record at this time.

The request to change the correspondence of record is not acceptable as the requested correspondence address as it is not that of: (1) the first named signing inventor; or (2) an intervening assignee of the entire interest under 37 C.F.R 3.71. All future communications from the Office will be directed to the first named signing inventor at the first copied address below until otherwise properly notified by the applicant.

Telephone inquiries concerning this decision should be directed to the undersigned at 571-272-7253.

Monica A. Graves
Petitions Examiner
Office of Petitions

cc: GRAHAM FREDERICK JOHN HILL
61 CHARLES WAY
MALVERN, WORCESTERSHIRE, GB WR14 2ND

cc: WILLIAM ILLINGWORTH-LAW & GRANT BEDFORD
GE LONDON PATENT OPERATION
15 JOHN ADMAN STREET
LONDON, ENGLAND WC2N 6LU

UNITED STATES PATENT AND TRADEMARK OFFICE

Commissioner for Patents
United States Patent and Trademark Office
P.O. Box 1450
Alexandria, VA 22313-1450
www.uspto.gov

DRINKER BIDDLE & REATH (DC)
1500 K STREET, N.W.
SUITE 1100
WASHINGTON, DC 20005-1209

MAILED

MAY 03 2010

OFFICE OF PETITIONS

In re Application of	:	
David J. Hammond et al	:	
Application No. 11/802,730	:	DECISION ON PETITION
Filed: May 24, 2007	:	TO WITHDRAW
Attorney Docket No. 70065.0005USC2	:	FROM RECORD
	:	

This is a decision on the Request to Withdraw as attorney or agent of record under 37 C.F.R. § 1.36(b), filed February 23, 2010.

The request is **APPROVED**.

The request was signed by Brian Lathrop on behalf of the practitioners of record associated with Customer Number 55694.

Applicant is reminded that there is no attorney of record at this time.

There is an outstanding Office action mailed March 29, 2010 that requires a reply from the applicant

The request to change the correspondence of record is not acceptable as the requested correspondence address is not that of: (1) the first named signing inventor; or (2) an intervening assignee of the entire interest under 37 C.F.R 3.71. All future communications from the Office will be directed to the first named signing inventor or the assignee of the entire interest at the copied address below until otherwise properly notified by the applicant.

The power of attorney received April 26, 2010 is not accepted. In order for an assignee to take action in a case before the Office, compliance with 37 CFR 3.73(b) must be satisfied. More specifically, 37 CFR 3.73(b) provides that: (1) when an assignee seeks to take action in a matter before the Office, the assignee must establish its ownership of the property to the satisfaction of the Commissioner; (2) ownership is established by submitting to the Office, in the Office file related to the matter in which action is sought to be taken, documentary evidence of a chain of title from the original owner to the assignee (*e.g.,* copy of an executed assignment submitted for recording) or by specifying (*e.g.,* reel and frame number) where such evidence is recorded in the Office; (3) the submission establishing ownership must be signed by a party authorized to act on behalf of the assignee; and (4) documents submitted to establish ownership may be required to be

recorded as a condition to permitting the assignee to take action in a matter pending before the Office. A blank 37 CFR 3.73(b) accompanies this decision.

Telephone inquiries concerning this decision should be directed to Irvin Dingle at (571) 272-3210.

Irvin Dingle
Petitions Examiner
Office of Petitions

cc: David J. Hammond
4916 Ripplemead Ct.
Laytonsville, MD 20882

cc: Mintz, Levin, Cohn, Ferris, Glovsky and Popeo, P.C.
One Financial Center
Boston, MA 02111

Attachment: A blank 37 CFR 3.73(b)

UNITED STATES PATENT AND TRADEMARK OFFICE

UNITED STATES DEPARTMENT OF COMMERCE
United States Patent and Trademark Office
Address: COMMISSIONER FOR PATENTS
P.O. Box 1450
Alexandria, Virginia 22313-1450
www.uspto.gov

APPLICATION NUMBER	FILING OR 371(C) DATE	FIRST NAMED APPLICANT	ATTY. DOCKET NO./TITLE
11/802,730	05/24/2007	David J. Hammond	70065.0005USC2

CONFIRMATION NO. 3458

POWER OF ATTORNEY NOTICE

55694
DRINKER BIDDLE & REATH (DC)
1500 K STREET, N.W.
SUITE 1100
WASHINGTON, DC 20005-1209

OC000000041404766

Date Mailed: 05/03/2010

NOTICE REGARDING CHANGE OF POWER OF ATTORNEY

This is in response to the Power of Attorney filed 02/23/2010.

- The withdrawal as attorney in this application has been accepted. Future correspondence will be mailed to the new address of record. 37 CFR 1.33.

/atesfai/

Office of Data Management, Application Assistance Unit (571) 272-4000, or (571) 272-4200, or 1-888-786-0101

UNITED STATES PATENT AND TRADEMARK OFFICE

UNITED STATES DEPARTMENT OF COMMERCE
United States Patent and Trademark Office
Address: COMMISSIONER FOR PATENTS
P.O. Box 1450
Alexandria, Virginia 22313-1450
www.uspto.gov

APPLICATION NUMBER	FILING OR 371(C) DATE	FIRST NAMED APPLICANT	ATTY. DOCKET NO./TITLE
11/802,730	05/24/2007	David J. Hammond	70065.0005USC2

CONFIRMATION NO. 3458

POA ACCEPTANCE LETTER

David J. Hammond
4916 Ripplemead Ct.
Laytonsville, MD 20882

OC000000041404844

Date Mailed: 05/03/2010

NOTICE OF ACCEPTANCE OF POWER OF ATTORNEY

This is in response to the Power of Attorney filed 02/23/2010.

The Power of Attorney in this application is accepted. Correspondence in this application will be mailed to the above address as provided by 37 CFR 1.33.

/atesfai/

Office of Data Management, Application Assistance Unit (571) 272-4000, or (571) 272-4200, or 1-888-786-0101

UNITED STATES PATENT AND TRADEMARK OFFICE

Commissioner for Patents
United States Patent and Trademark Office
P.O. Box 1450
Alexandria, VA 22313-1450
www.uspto.gov

MAIL

AUG 13 2009

DIRECTOR'S OFFICE
TECHNOLOGY CENTER 2600

OLIFF & BERRIDGE, PLC
P.O. BOX 320850
ALEXANDRIA VA 22320-4850

In re Application of	:	
ABE, TSUTOMU	:	DECISION ON REQUEST TO
Application No. 11/802,743	:	PARTICIPATE IN PATENT
Filed: May 24, 2007	:	PROSECUTION HIGHWAY
Attorney Docket No. 132635	:	PROGRAM AND PETITION
	:	TO MAKE SPECIAL UNDER
	:	37 CFR 1.102(d)

This is a decision on the request to participate in the Patent Prosecution Highway (PPH) program and the petition under 37 CFR 1.102(d), filed June 18, 2009, to make the above-identified application special.

The request and petition are **GRANTED**.

A grantable request to participate in the PPH program and petition to make special require:

(1) The U.S. application must validly claim priority under 35 U.S.C. 119(a) to one or more applications filed in the JPO;
(2) Applicant must submit a copy of the allowable/patentable claim(s) from the JPO application(s) along with an English translation thereof and a statement that the English translation is accurate;
(3) All the claims in the U.S. application must sufficiently correspond or be amended to sufficiently correspond to the allowable/patentable claim(s) in the JPO application(s);
(4) Examination of the U.S. application has not begun;
(5) Applicant must submit a copy of all the office actions from each of the JPO application(s) containing the allowable/patentable claim(s) along with an English translation thereof and a statement that the English translation is accurate;
(6) Applicant must submit an IDS listing the documents cited by the JPO examiner in the JPO office action along with copies of documents except U.S. patents or U.S. patent application publications; and
(7) The required petition fee under 37 CFR 1.17(h).

The request to participate in the PPH program and petition comply with the above requirements. Accordingly, the above-identified application has been accorded "special" status.

Telephone inquiries concerning this decision should be directed to Michael Horabik at 571-272-3068.

All other inquiries concerning the examination or status of the application should be directed to Patent Application Information Retrieval (PAIR) system.

The application is being forwarded to the examiner for action on the merits commensurate with this decision.

Michael Horabik
Quality Assurance Specialist
Technology Center 2600
Communications

UNITED STATES PATENT AND TRADEMARK OFFICE

Commissioner for Patents
United States Patent and Trademark Office
P.O. Box 1450
Alexandria, VA 22313-1450
www.uspto.gov

JAGTIANI + GUTTAG
10363-A DEMOCRACY LANE
FAIRFAX, VA 22030

COPY MAILED

FEB 2 9 2008

OFFICE OF PETITIONS

In re Application of	:	
DALY, Christopher N. et al.	:	
Application No. 11/802,756	:	DECISION ON PETITION
Filed: March 24, 2007	:	TO WITHDRAW
Attorney Docket No. **22409-00138-US**	:	FROM RECORD
	:	

This is a decision on the Request to Withdraw as attorney or agent of record under 37 C.F.R. § 1.36(b), filed October 09, 2007.

The request is moot because a revocation of power of attorney has been previously filed.

A review of the file record indicates that the power of attorney to JAGTIANI + GUTTAG has been revoked by the assignee of the patent application on January 29, 2008. Accordingly, the request to withdraw under 37 C.F.R. § 1.36(b) is moot.

All future communications from the Office will continue to be directed to the below-listed address until otherwise notified by applicant.

Telephone inquires concerning this decision should be directed to Tredelle Jackson at 571-272-2783.

Monica A. Graves
Petitions Examiner
Office of Petitions

cc: **CONNOLLY BOVE LODGE & HUTZ LLP**
1875 EYE STREET, N.W.
SUITE 1100
WASHINGTON DC 20036

UNITED STATES PATENT AND TRADEMARK OFFICE

Commissioner for Patents
United States Patent and Trademark Office
P.O. Box 1450
Alexandria, VA 22313-1450
www.uspto.gov

COPY MAILED

JUN 0 9 2008

BINGHAM MCCUTCHEN LLP
2020 K Street, N.W.
Intellectual Property Department
WASHINGTON DC 20006

In re Application of	:	
Paul, et al.	:	
Application No. 11/802,769	:	DECISION GRANTING PETITION
Filed: May 24, 2007	:	
Attorney Docket No. 704627-5008	:	

This is a decision on the petition filed May 8, 2008, that is responsive to the "Notice of Incomplete Nonprovisional Application" (the "Notice") mailed April 16, 2008.

On May 27, 2007, the application was deposited.

On April 18, 2008, the Office of Patent Application Processing mailed the Notice stating that no filing date had been accorded the application because drawings were not found with the original disclosure, but appeared to be required to understand the invention claimed. The Notice allowed a non-extendable period for response of two months from its mailing date. The instant petition was filed on May 8, 2008.

Petitioner request that the application be amended to include the inadvertently omitted drawings on the basis that the application as filed contained a prior benefit claim under 37 CFR 1.78 to a prior filed and co-pending application[1]. Petitioner's arguments have been considered, however; it is controlling that a review of the application confirms that the application, as filed, contained at least one composition claim. The Manual of Patent Examining Procedure, Section 601.01(f) provides that:

> It has been PTO practice to treat an application that contains at least one process, composition, or method claim as an application for which a drawing is not necessary for an understanding of the invention under 35 U.S.C. 113 (first sentence).

Thus, pursuant to § 601.01(f), a drawing is not considered essential for a filing date. The application is entitled to a filing date without drawings present in the application.

Accordingly, the Office should have mailed a Notice of Omitted Items and not a Notice of Incomplete Nonprovisional Application. As stated in MPEP 601.01(g), if an application is entitled to a filing date, the mailing of a Notice of Omitted Items will permit *inter alia*:

---

[1] It is noted that petitioner states that the subject application claims the benefit of prior-filed non-provisional application 10/104,019. A review of the application file history reveals that a proper benefit claim under 37 CFR 1.78 to application 10/104,019 was not present on filing as is required by 37 CFR 1.57 as the claim of priority to this application is made in the application transmittal sheet. The claim for priority under 37 CFR 1.78 must appear in the first sentence of the specification or in an Application Data Sheet in all application filed after September 21, 2004. Petitioner would not have been able to have the drawings included as per 37 CFR 1.57 because a proper benefit claim under 37 CFR 1.78 to application 10/104,019 was not made on filing. It is further noted that if the petition had been treated under 37 CFR 1.57 it would have also been deficient because the amendment required by 37 CFR 1.57 did not accompany the petition.

> If an application was filed on or after September 21, 2004, and contains a claim under 37 CFR 1.55 for priority of a prior-filed foreign application or a claim under 37 CFR 1.78 for the benefit of a prior-filed provisional, non-provisional, or international application that was present on the filing date of the application, and the omitted portion of the drawing(s) was inadvertently omitted from the application and is completely contained in the prior-filed application, applicant may submit an amendment to include the inadvertently omitted portion of the drawing(s) pursuant to 37 CFR 1.57(a). The amendment should comply with 37 CFR 1.57(a) and 37 CFR 1.121. See MPEP § 201.17.

No petition is required. Prior to the first action on the merits, petitioner should file a preliminary amendment requesting entry of the omitted drawings.

The petition is granted to the extent the instant petition requests a filing date of May 8, 2008, with no drawings present in the application.

The petition fee of $400.00 will be refunded, in due course.

The Office of Patent Application Processing has been advised of this decision. Pursuant to this decision, the application has been referred to the Office of Patent Application Processing for correction of the filing date to May 24, 2007, indication in Office records that no sheets of drawings were present on filing, and for issuance of a filing receipt.

Any inquiries related to this decision should be directed to Kenya A. McLaughlin, Petitions Attorney, at (571) 272-3222.

Anthony Knight
Supervisor
Office of Petitions

UNITED STATES PATENT AND TRADEMARK OFFICE

UNITED STATES DEPARTMENT OF COMMERCE
United States Patent and Trademark Office
Address: COMMISSIONER FOR PATENTS
P.O. Box 1450
Alexandria, Virginia 22313-1450
www.uspto.gov

BACON & THOMAS, PLLC
625 SLATERS LANE
FOURTH FLOOR
ALEXANDRIA, VA 22314-1176

Mail Date: 04/21/2010

Applicant	: Yung-Feng Lin	: DECISION ON REQUEST FOR
Patent Number	: 7599220	: RECALCULATION of PATENT
Issue Date	: 10/06/2009	: TERM ADJUSTMENT IN VIEW
Appliction No	: 11/802,785	: OF WYETH AND NOTICE OF INTENT TO
Filed	: 05/25/2007	: ISSUE CERTIFICATE OF CORRECTION
		:

The Request for Recalculation is **GRANTED** to the extent indicated.

The patent term adjustment has been determined to be **308** days. The USPTO will *sua sponte* issue a certificate of correction reflecting the amount of PTA days determined by the recalculation.

Prior to the issuance of the certificate of correction, the USPTO will afford patentee an opportunity to be heard and request reconsideration. Accordingly, patentee has **one month or thirty (30) days**, whichever is longer, to file a request for reconsideration of this patent term adjustment calculation. See 35 U.S.C. 154(b)(3)(B)(ii) and 37 CFR 1.322(a)(4). No extensions of time will be granted under 37 CFR 1.136.

Patentee should use document code PET.OP if electronically filing a request for reconsideration of this patent term adjustment calculation. The patentee must also include the information required by 37 CFR 1.705(b)(2) and the fee required by 37 CFR 1.18(e). If patentee does not file a timely request for reconsideration of this patent term adjustment calculation including the information required by 37 CFR 1.705(b)(2) and the fee required by 37 CFR 1.18(e), the USPTO will issue a certificate of correction reflecting the PTA determination noted above.

Patentee should be aware that in order to preserve the right to review in the United States District Court for the District of Columbia of the USPTO patent term adjustment determination, patentee must ensure that he or she also take the steps required under 35 U.S.C. 154(b)(4)(A) in a timely manner. Nothing in the request for recalculation should be construed as providing an alternative time frame for commencing a civil action under 35 U.S.C. 154(b)(4)(A).

Any questions concerning this decision should be directed to the Office of Patent Legal Administration at 571-272-7702.

UNITED STATES PATENT AND TRADEMARK OFFICE

COMMISSIONER FOR PATENTS
UNITED STATES PATENT AND TRADEMARK OFFICE
P.O. BOX 1450
ALEXANDRIA, VA 22313-1450
www.uspto.gov

0 3 DEC 2007

LAW OFFICE OF MICHAEL A. SANZO, LLC
15400 CALHOUN DR.
SUITE 125
ROCKVILLE, MD 20855

In re Application of GROGER et al	:	
U.S. Application No.: 11/802,798	:	
PCT Application No.: PCT/EP2005/011824	:	
Int. Filing Date: 04 November 2005	:	DECISION
Priority Date Claimed: 30 November 2004	:	
Attorney Docket No.: 7601/09280	:	
For: ENZYME REACTIONS IN MINIEMULSIONS	:	

This is in response to applicant's "Petition Under 37 C.F.R. § 1.181 to Recognize the Application as an Application Filed Under 37 U.S.C. § 371" filed 16 October 2007.

BACKGROUND

On 04 November 2005, applicant filed international application PCT/EP2005/011824, which claimed priority of an earlier Germany application filed 30 November 2004. A copy of the international application was communicated to the USPTO from the International Bureau on 08 June 2006. The thirty-month period for paying the basic national fee in the United States expired on 30 May 2007.

On 25 May 2007, applicant filed national stage papers in the United States Designated/Elected Office (DO/EO/US). The submission was accompanied by, *inter alia*, the basic national fee required by 35 U.S.C. 371(c)(1).

On 29 August 2007, applicant filed executed declarations.

On 29 September 2007, the USPTO mailed a Notice Regarding Benefit/Priority Claim(s).

On 16 October 2007, applicant filed the present petition under 37 CFR 1.181.

DISCUSSION

A review of the application file reveals that the present application was properly identified as a U.S. national phase application under 35 U.S.C. 371. However, the application was inadvertently processed as an application filed under 35 U.S.C. 111(a).

CONCLUSION

For the reasons above, the petition under 37 CFR 1.181 is GRANTED.

The Notice Regarding Benefit/Priority Claim(s) mailed 20 March 2006 is hereby VACATED.

This application is being forwarded to the United States Designated/Elected Office (DO/EO/US) for processing of the application as a U.S. national phase application filed under 35 U.S.C. 371, including preparation and mailing of a Notification of Missing Requirements Under 35 U.S.C. 371 (Form PCT/DO/EO/905), which should indicate that the declarations filed 29 August 2007 are not accompanied by a statement that the English translations are accurate as required by 37 CFR 1.69(b).

Bryan Lin

Bryan Lin
PCT Legal Examiner
PCT Legal Office

Telephone: 571-272-3303
Facsimile: 571-273-0459

UNITED STATES PATENT AND TRADEMARK OFFICE

Commissioner for Patents
United States Patent and Trademark Office
P.O. Box 1450
Alexandria, VA 22313-1450
www.uspto.gov

FINNEGAN, HENDERSON, FARABOW,
GARRETT & DUNNER
LLP
901 NEW YORK AVENUE, NW
WASHINGTON DC 20001-4413

COPY MAILED

AUG 27 2007

OFFICE OF PETITIONS

In re Application of
Urban Hirschey
Application No. 11/802,850
Filed: May 25, 2007
Attorney Docket No. 01670.0028-00000

: DECISION GRANTING PETITION

This is a decision on the "Petition under 37 CFR 1.53(e)(2)" filed July 19, 2007 requesting to accept figure 8 as part of the original disclosure.

The application was filed on May 25, 2007. However, on June 22, 2007, the Office of Initial Patent Examination (OIPE) mailed a Notice Of Omitted Item(s) in a Nonprovisional Application, "Notice" stating that the application had been accorded a filing date of May 25, 2007, but figure 8 as described in the specification appeared to have been omitted.

In response, the present petition was filed wherein Petitioner contends figure 8 was filed on May 25, 2007. In support, the petition is accompanied by a copy of applicant's return postcard receipt which lists "17 sheets of drawings (Figures 1-8)". The petition is further accompanied by a copy of figure 8.

Applicants' postcard receipt is prima facie evidence that 17 sheets of drawings including figure 8 as described in the specification were received on May 25, 2007. The Office is in receipt of only16 pages, which does not include figure 8. Therefore, it is concluded that 17 pages of drawings including figure 8 was received on May 25, 2007, as shown in counsel's file, and later misplaced in the office.

The petition is Granted to the extent indicated above. The $400.00 petition fee will be refunded.

Figure 8 supplied on July 19, 2007, will be used for processing and examination purposes.

The application will be returned to the Office of Initial Patent Examination for further processing with a filing date of May 25, 2007, using the drawings submitted on May 25, 2007 and substitute figure 8 supplied with the petition on July 19, 2007.

Telephone inquiries specific to this matter should be directed to the undersigned at (571) 272 -3215.

Charlema R. Grant

Charlema R. Grant
Petitions Attorney
Office of Petitions

SPE RESPONSE FOR CERTIFICATE OF CORRECTION

DATE : 7/30/10 **Paper No.:** _____

TO SPE OF : ART UNIT 2817 PASCAL Robert (spe)

SUBJECT : Request for Certificate of Correction for Appl. No.: 11/802874 Patent No.: 7605665

Please respond to this request for a certificate of correction within 7 days.

FOR IFW FILES:

Please review the requested changes/corrections as shown in the **COCIN** document(s) in the IFW application image. No new matter should be introduced, nor should the scope or meaning of the claims be changed.

Please complete the response (see below) and forward the completed response to scanning using document code **COCX**.

FOR PAPER FILES:

Please review the requested changes/corrections as shown in the attached certificate of correction. Please complete this form (see below) and forward it with the file to:

Certificates of Correction Branch (CofC)
Randolph Square – 9D10-A
Palm Location 7580

Certificates of Correction Branch
703-756-1571 _____

Thank You For Your Assistance

The request for issuing the above-identified correction(s) is hereby:
Note your decision on the appropriate box.

- ☑ **Approved** — All changes apply.
- ☐ **Approved in Part** — Specify below which changes **do not** apply.
- ☐ **Denied** — State the reasons for denial below.

Comments: OK Sm

SPE

2817
Art Unit

UNITED STATES PATENT AND TRADEMARK OFFICE

Commissioner for Patents
United States Patent and Trademark Office
P.O. Box 1450
Alexandria, VA 22313-1450
www.uspto.gov

EMPK & Shiloh, LLP
116 JOHN ST,
SUITE 1201
NEW YORK, NY 10038

COPY MAILED

JUN 2 6 2008

OFFICE OF PETITIONS

In re Application of :
Adi Mashiach :
Application No. 11/802,928 : ON PETITION
Filed: May 25, 2007 :
Attorney Docket No. P-10201-US :

This is a decision on the petition under 37 CFR 1.137(b), filed by March 10, 2008, to revive the above-identified application.

The petition is **GRANTED**.

The application became abandoned for failure to timely respond to a Notice to File Missing Parts (Notice) mailed June 22, 2007. The Notice set a period for reply of two (2) months and required the statutory basic filing fee, a search fee and examination fee, additional claim fees, an oath or declaration under 37 CFR 1.63 and the surcharge under 37 CFR 1.16(e). No extension of time under the provisions of 37 CFR 1.136(a) was obtained. A Notice of Abandonment was mailed on March 4, 2008. On March 10, 2008, the present petition was filed, including *inter alia*, a 4-month extension of time.

The petition satisfies the requirements of 37 CFR 1.137(b) in that petitioner has supplied (1) the reply in the form of the $155 basic filing fee, $255 search fee, $105, examination fee, $200 additional claim fees, $65 surcharge, and a declaration under 37 CFR 1.63; (2) the petition fee of $770; and (3) an adequate statement of unintentional delay[1].

Extensions of time under 37 CFR 1.136 are available only if asked for prior to or with the response. In no case, however, may an applicant respond later than the maximum time period set by statute. Accordingly, if the question of abandonment arises when the provisions of 37 CFR 1.136 can no longer be used, then the application is abandoned when the unextended time for response has expired. Since, no extension of time fees are due on a petition for revival, petitioner is entitled to a refund of the $820 extension fees included with this petition.

[1] While it is not apparent whether the person signing the statement of unintentional delay was in a position to have firsthand or direct knowledge of the facts and circumstances of the delay at issue, such statement is being treated as having been made as the result of a reasonable inquiry into the facts and circumstances of such delay. See 37 CFR 10.18(b) and Changes to Patent Practice and Procedure; Final Rule Notice, 62 Fed. Reg. 53131, 53178 (October 10, 1997), 1203 Off. Gaz. Pat. Office 63, 103 (October 21, 1997). In the event that such an inquiry has not been made, petitioner must make such an inquiry. If such inquiry results in the discovery that it is not correct that the entire delay in filing the required reply from the due date for the reply until the filing of a grantable petition pursuant to 37 CFR 1.137(b) was unintentional, petitioner must notify the Office.

Any request for refund must included a copy of this decision and be mailed to Mail Stop 16, Director of the U.S. Patent and Trademark Office, P. O. Box 1450, Alexandria, VA 22313-1450 or faxed to the Customer Service Help Desk at (571) 273-6500.

The application is being referred to the Office of Patent Application Processing (OPAP) for further processing using the declaration filed March 10, 2008.

Telephone inquires related to this decision should be directed to the undersigned at (571) 272-3204. Telephone inquiries related to processing at OPAP should be directed to their hotline at (571) 272-4000.

Sherry D. Brinkley
Petitions Examiner
Office of Petitions

UNITED STATES PATENT AND TRADEMARK OFFICE

Commissioner for Patents
United States Patent and Trademark Office
P.O. Box 1450
Alexandria, VA 22313-1450
www.uspto.gov

MUNCY, GEISSLER, OLDS & LOWE, PLLC
P.O. BOX 1364
FAIRFAX VA 22038-1364

MAILED

SEP 28 2009

OFFICE OF PETITIONS

In re Application of
RUETTIGER, Anton
Application No. 11/802,933
Filed: May 25, 2007
Attorney Docket No. **1005/0142PUS1**

DECISION ON PETITION
TO WITHDRAW
FROM RECORD

This is a decision on the Request to Withdraw as attorney or agent of record under 37 C.F.R. § 1.36(b), filed September 03, 2009.

The request is **APPROVED**.

A grantable request to withdraw as attorney/agent of record must be signed by every attorney/agent seeking to withdraw or contain a clear indication that one attorney is signing on behalf of another/others. The Office requires the practitioner(s) requesting withdrawal to certify that he, she, or they have: (1) given reasonable notice to the client, prior to the expiration of the response period, that the practitioner(s) intends to withdraw from employment; (2) delivered to the client or a duly authorized representative of the client all papers and property (including funds) to which the client is entitled; and (3) notified the client of any responses that may be due and the time frame within which the client must respond, pursuant 37 CFR 10.40(c).

The request was signed by Martin Geissler on behalf of all attorneys of record who are associated with customer No. 60601. All attorneys/agents associated with the Customer Number 60601 have been withdrawn. Applicant is reminded that there is no attorney of record at this time.

The request to change the correspondence address of record is not acceptable as the requested correspondence address is not that of: (1) the first named signing inventor; or (2) an intervening assignee of the entire interest under 37 C.F.R 3.71. All future communications from the Office will be directed to the first named signing inventor at the first copied address below until otherwise properly notified by the applicant.

In order to request or take action in a patent matter, the assignee must establish its ownership of the patent to the satisfaction of the Director. In this regard, a Statement under 37 CFR 3.73(b) must have either: (i) documentary evidence of a chain of title from the original owner to the assignee

(e.g., copy of an executed assignment), and a statement affirming that the documentary evidence of the chain of title from the original owner to the assignee was or concurrently is being submitted for recordation pursuant to § 3.11; or (ii) a statement specifying where documentary evidence of a chain of title from the original owner to the assignee is recorded in the assignment records of the Office (e.g., reel and frame number).

Telephone inquiries concerning this decision should be directed to Tredelle Jackson at 571-272-2783.

Tredelle D. Jackson
Paralegal Specialist
Office of Petitions

cc: **ANTON RUETTIGER**
ELLERWEG 11
WILDFLECKEN D-97772
GERMANY

cc: **PREH GMBH**
ANDER STADTHALLE
BAD NEUSTADT D-97616

UNITED STATES PATENT AND TRADEMARK OFFICE

Commissioner for Patents
United States Patent and Trademark Office
P.O. Box 1450
Alexandria, VA 22313-1450
www.uspto.gov

MUNCY, GEISSLER, OLDS & LOWE, PLLC
P.O. BOX 1364
FAIRFAX VA 22038-1364

COPY MAILED

DEC 0 9 2009

OFFICE OF PETITIONS

In re Application of	:	
Yang et al.	:	
Application No. 11/802,949	:	DECISION ON PETITION
Filed: May 29, 2007	:	
Attorney Docket No. 5690/0110PUS1	:	

This is a decision on the petition under the unintentional provisions of 37 CFR 1.137(b), filed October 13, 2009, to revive the above-identified application.

The petition is **GRANTED**.

The application became abandoned for failure to reply in a timely manner to the non-final Office action mailed September 5, 2008, which set a shortened statutory period for reply of three (3) months. No extensions of time under the provisions of 37 CFR 1.136(a) were obtained. Accordingly, the application became abandoned on December 6, 2008. A Notice of Abandonment was mailed March 11, 2009.

The petition satisfies the requirements of 37 CFR 1.137(b) in that petitioner has supplied (1) the reply in the form of an Amendment, (2) the petition fee of $1,620.00, and (3) an adequate statement of unintentional delay.

It is not apparent whether the statement of unintentional delay was signed by a person who would have been in a position of knowing that the **entire** delay in filing the required reply from the due date for the reply until the filing of a grantable petition pursuant to 37 CFR 1.137(b) was unintentional. Nevertheless, in accordance with 37 CFR 10.18, the statement is accepted as constituting a certification of unintentional delay. However, in the event that petitioner has no knowledge that the delay was unintentional, petitioner must make such an inquiry to ascertain that, in fact, the delay was unintentional. If petitioner discovers that the delay was intentional, petitioner must notify the Office.

Telephone inquiries concerning this decision should be directed to the undersigned at (571) 272-7751.

This matter is being referred to Technology Center AU 3735 for appropriate action by the Examiner in the normal course of business on the reply received.

Joan Olszewski
Petitions Examiner
Office of Petitions

UNITED STATES PATENT AND TRADEMARK OFFICE

UNITED STATES DEPARTMENT OF COMMERCE
United States Patent and Trademark Office
Address: COMMISSIONER FOR PATENTS
P.O. Box 1450
Alexandria, Virginia 22313-1450
www.uspto.gov

APPLICATION NO.	FILING DATE	FIRST NAMED INVENTOR	ATTORNEY DOCKET NO.	CONFIRMATION NO.
11/802,970	05/29/2007	Kazuya Nakagawa	MNL-2635-479	5861

7590 11/18/2008
NIXON & VANDERHYE, PC
901 NORTH GLEBE ROAD, 11TH FLOOR
ARLINGTON, VA 22203

EXAMINER
LARKIN, DANIEL SEAN

ART UNIT	PAPER NUMBER
2856	

MAIL DATE	DELIVERY MODE
11/18/2008	PAPER

DECISION GRANTING PETITION UNDER 37 CFR 1.138(d)

The declaration of express abandonment is recognized

This is in response to the petition under 37 CFR 1.138(d), requesting for a refund of any previously paid search fee and excess claims fee in the above-identified application.

The petition is granted.

The express abandonment is recognized. Any previously paid search fee and excess claims fee are hereby refunded.

Telephone inquiries should be directed to the Office of Data Management at (571) 272-4200.

Naomi Farmer

Patent Publication Branch
Office of Data Management

Refund Ref:
11/18/2008 0030063603

Credit Card Refund Total: $900.00

Am Exp..: XXXXXXXXXXX2021

Adjustment date: 11/18/2008 NFARMER
05/30/2007 MAHMED1 00000036 11802970
02 FC:1111 -500.00 OP
04 FC:1201 -400.00 OP

FORM PET651G (Rev. 08/07)

UNITED STATES PATENT AND TRADEMARK OFFICE

Commissioner for Patents
United States Patent and Trademark Office
P.O. Box 1450
Alexandria, VA 22313-1450
www.uspto.gov

COPY MAILED

NOV 19 2009

OFFICE OF PETITIONS

DANIEL J. GORMAN
740 LONDSDALE ROAD
OTTAWA ON K1K 0K2 CA CANADA

In re Application of	:	
Daniel J. GORMAN	:	
Application No. 11/802,974	:	DECISION ON PETITION
Filed: May 29, 2007	:	TO MAKE SPECIAL UNDER
Attorney Docket No.	:	37 CFR 1.102(c)(1)
	:	

This is a decision on the petition under 37 CFR 1.102(c)(1), filed September 24, 2009, to make the above-identified application special based on applicant's age as set forth in M.P.E.P. § 708.02, Section IV.

The petition is **GRANTED**.

A grantable petition to make an application special under 37 CFR 1.102(c)(1) and MPEP § 708.02, Section IV: Applicant's Age must be accompanied by evidence showing that at least one of the applicants is 65 years of age, or more, such as a birth certificate or a statement by applicant. No fee is required

The instant petition includes an affidavit signed by the applicant. Accordingly, the above-identified application has been accorded "special" status.

Telephone inquiries concerning this decision should be directed to the undersigned at 571-272-6735.

All other inquiries concerning either the examination or status of the application should be directed to the Technology Center at 571-272-3700.

The application is being forwarded to Technology Center Art Unit 3723 for action on the merits commensurate with this decision.

/Diane C. Goodwyn/
Diane C. Goodwyn
Petitions Examiner
Office of Petitions

UNITED STATES PATENT AND TRADEMARK OFFICE

UNITED STATES DEPARTMENT OF COMMERCE
United States Patent and Trademark Office
Address: COMMISSIONER FOR PATENTS
P.O. Box 1450
Alexandria, Virginia 22313-1450
www.uspto.gov

APPLICATION NO.	FILING DATE	FIRST NAMED INVENTOR	ATTORNEY DOCKET NO.	CONFIRMATION NO.
11/802,990	05/29/2007	Hitoshi Kato	008312-0361526	6019

7590 08/20/2009
PILLSBURY WINTHROP SHAW PITTMAN, LLP
P.O. BOX 10500
MCLEAN, VA 22102

EXAMINER
FEILD, LYNN DIANA

ART UNIT	PAPER NUMBER
2400	

MAIL DATE	DELIVERY MODE
08/20/2009	PAPER

DECISION GRANTING PETITION UNDER 37 CFR 1.138(d)

The declaration of express abandonment is recognized

This is in response to the petition under 37 CFR 1.138(d), requesting for a refund of any previously paid search fee and excess claims fee in the above-identified application.

The petition is granted.

The express abandonment is recognized. Any previously paid search fee and excess claims fee are hereby refunded.

Telephone inquiries should be directed to the Office of Data Management at (571) 272-4200.

Patent Publication Branch
Office of Data Management

Adjustment Date: 08/21/2009 BPOWELL
05/29/2007 MAHMEDI 00000056 033975 11802990
02 FC:1111 500.00 CR

Adjustment Date: 03/21/2009 BPOWELL
05/29/2007 MAHMEDI 00000056 033975 11802990
02 FC:1111 500.00 CR

FORM PET651G (Rev. 08/07)

11United States Patent and Trademark Office

17 FEB 2010

Commissioner for Patents
United States Patent and Trademark Office
P.O. Box 1450
Alexandria, VA 22313-1450
www.uspto.gov

Stuart D. Frenkel
Frenkel & Associates, P.C.
Suite 330
3975 University Drive
Fairfax VA 22030

In re Application of	:	
Kobayashi et al.	:	
Application No.: 11/803,026	:	
Filing Date: 11 May 2007	:	DECISION
Attorney Docket No.: SDF 07-11	:	
For: Preventive Or Therapeutic	:	
Agent For Neuropathic Pain	:	

This is in response to the petition under 37 CFR 1.182 filed on 02 December 2009.

BACKGROUND

International application PCT/JP2005/020830 was filed on 14 November 2005, claimed an earlier priority date of 19 November 2004, and designated the U.S. The International Bureau transmitted a copy of the published international application to the USPTO on 26 May 2006. The 30 month time period for paying the basic national fee in the United States expired at midnight on 19 May 2007.

On 11 May 2007, applicants filed papers and fees which were associated with the instant application number.

On 14 June 2007, a Filing Receipt was mailed to counsel, reflecting a "Filing or 371(c) Date" of "05/11/2007."

DISCUSSION

Petitioner requests, in effect, that this application be converted from the status of an application filed under 35 U.S.C. 111(a) to that of a national stage under 35 U.S.C. 371 of PCT/JP2005/020830. Applicants state (in part) that "Applicant's attorney simply used the wrong form when filing by mail, but clearly intended to file the application as a National Stage application under 35 U.S.C. 371..."

Review of the record reveals that the Transmittal Letter filed on 11 May 2007 was a form indicated to be "only for new nonprovisional applications under 37 CFR 1.53(b)," indicating that treatment under 35 U.S.C. 111(a) was desired. The attached declaration was directed to "the specification of which is attached hereto," and did not specifically indicate that the international application cited by petitioner was being executed. These indicia served as instructions that processing under 35 U.S.C. 111(a) was desired.

The USPTO has adopted a bright-line test for determining whether application papers will be processed under 35 U.S.C. 371 or alternatively under 35 U.S.C. 111(a). Under this standard, any intended filing of an international application as a national stage application must

clearly and unambiguously be identified as such and must satisfy all of the conditions set forth in 35 U.S.C. 371(c). The official PTO Notice published in the Official Gazette at 1077 OG 13 entitled "Minimum Requirements for Acceptance of Applications Under 35 U.S.C. 371 (the National Stage of PCT)" states, in part, the following:

> The Patent and Trademark Office is continuing to receive application papers which do not clearly identify whether the papers (1) are being submitted to enter the national stage of the Patent Cooperation Treaty (PCT) under 35 U.S.C. 371 or (2) are being filed as a regular national application under 35 U.S.C. 111.
>
> To clearly indicate an international application is being filed under 35 U.S.C. 371 the applicant should use the "Transmittal Letter for United States Designated Office" (Form PTO-1390) as the transmittal letter.
>
> Alternatively, one of the following indications may be used:
>
> 1) the applicant shall clearly state in the transmittal or cover letter that he or she is filing under 35 U.S.C. 371 or entering the national stage under PCT; or
>
> 2) the applicant clearly identifies in the oath or declaration the specification to which it is directed by referring to a particular international application by PCT Serial Number and International Filing Date and that he or she is executing the declaration as, and seeking a U.S. Patent as, the inventor of the invention described in the identified international application.

If there are any conflicting instructions as to which section of the statute (371 or 111(a)) is intended the application will be accepted under 35 U.S.C. 111(a).

The indicia described above constitute instructions to the effect that processing under 35 U.S.C. 111(a) rather than U.S.C. 371 was desired. Under the policy referenced above, this application was properly processed under 35 U.S.C. 111(a). U.S. Statutes and Regulations do not specifically provide for the requested action and as such, the Office does not grant such petitions for conversion as a mere matter of course. The Office will only grant such petitions upon a showing by applicant of sufficient cause (e.g., the loss of patent rights) where no other remedy is available. Since applicants have not shown sufficient cause (e.g., loss of rights) or lack of availability of an alternative remedy, it would be appropriate, and consistent with the policy considerations described above, to continue processing this application under 35 U.S.C. 111(a).

The petition includes language to the effect that "Applicants will amend the specification as suggested by the PCT office of the U.S.P.T.O. to change the status of the present application to a continuation of PCT Application No. JP2005/020830." However, as petitioner has not filed such an amendment, nor a formal petition under 37 CFR 1.78(a), it would not be appropriate to render a decision with respect to such issues at this time.

DECISION

The petition under 37 CFR 1.182 is **DISMISSED**, without prejudice.

No response to this Decision is required. However, should applicants choose to request reconsideration, any such request for reconsideration must be filed within **TWO (2) MONTHS** of the mailing date of this Decision, extendable under 37 CFR 1.136(a). Any such submission should be entitled "Renewed Petition Under 37 CFR 1.182."

Any further correspondence with respect to this matter may be filed electronically via EFS-Web selecting the document description "Petition for review and processing by the PCT Legal Office" or by mail addressed to Mail Stop PCT, Commissioner for Patents, Office of PCT Legal Administration, P.O. Box 1450, Alexandria, Virginia 22313-1450, with the contents of the letter marked to the attention of the Office of PCT Legal Administration.

/George Dombroske/
George Dombroske
PCT Legal Examiner
Office of PCT Legal Administration
Tel: (571) 272-3283

1 6 MAR 2010

United States Patent and Trademark Office

Commissioner for Patents
United States Patent and Trademark Office
P.O. Box 1450
Alexandria, VA 22313-1450
www.uspto.gov

Stuart D. Frenkel
Frenkel & Associates, P.C.
Suite 330
3975 University Drive
Fairfax VA 22030

In re Application of	:	
Kobayashi et al.	:	
Application No. 11/803,026	:	
Filing Date: 11 May 2007	:	DECISION
Atty. Docket No.: SDF 07-11	:	
For: Preventive Or Therapeutic	:	
Agent For Neuropathic Pain	:	

This is in response to the "Renewed Petition Under 37 CFR 1.182" filed on 24 February 2010.

DISCUSSION

In a Decision mailed on 17 February 2010, the petition under 37 CFR 1.182 filed on 02 December 2009 was dismissed, without prejudice, because

> Inspection of the correspondence filed on 30 October 2009 reveals that the Electronic Acknowledgment Receipt suggests that processing under 35 U.S.C. 371 was desired, whereas the Transmittal Letter and specification suggest that processing under 35 U.S.C. 111(a) was intended. These indicia constitute conflicting instructions as to whether processing under 35 U.S.C. 371 rather than U.S.C. 111(a) was desired. Under the policy referenced above, this application properly should be processed under 35 U.S.C. 111(a). Since applicants have not shown sufficient cause (e.g., loss of rights) or lack of availability of an alternative remedy, it would be appropriate, and consistent with the policy considerations described above, to process this application under 35 U.S.C. 111(a).

In response, petitioner argues (in part) that the declaration filed on 11 May 2007 "includes a claim to priority to the international application no. PCT/JP2005/020830 in two places..." Inspection of the first page of that declaration reveals that it is directed toward "the specification of which is attached hereto," referring to the concurrently filed specification. The fact that a declaration may include a claim of priority to an earlier application does not imply that such declaration is executing such prior application; here, the fact that the international application appears as a priority claim does not mean that the declaration specified that it was directed toward the national stage in the United States under 35 U.S.C. 371 of said international application. Moreover, regardless of whether the declaration implied that treatment under 35 U.S.C. 111(a) was desired, processing under 35 U.S.C. 111(a) was still appropriate because of the presence of other indicia consistent with treatment under §111(a)(e.g., the Transmittal Letter).

Petitioner presents further evidence in an effort to show applicants' intent to enter the national stage under 35 U.S.C. 371. However, under the policy described in the previous

Decision, the determination of whether conflicting instructions exists depends upon the objective contents of the application file, rather than applicants' underlying subjective intent.

Petitioner also argues that "Applicant would not be entitled to claim any priority of the international application or the originally filed Japanese application, which is also listed in the declaration, unless the application was filed as a national stage application under 35 U.S.C. 371, since the filing dates of both the PCT and the original Japanese application were more than one year prior to the filing of the above-identified application." Review of the record reveals that international application PCT/JP2005/020830 became abandoned with respect to the national stage in the United States, for failure to timely pay the basic national fee, as of midnight on 19 May 2007. Meanwhile, the instant application was filed on 11 May 2007. As such, the two application were co-pending from 11 May 2007 through 19 May 2007. Counsel may wish to amend the instant application to include a specific reference to the PCT application under 35 U.S.C. 120. *But see* 37 CFR 1.78. Since this remedy is available, the circumstances presented by the instant case do not warrant waiver or deviation from the policy described in the Decision mailed on 17 February 2010.

DECISION

The petition is **DISMISSED**, without prejudice.

No response to this Decision is required. In the event that applicants wish to file a response, any such response must be filed within **TWO (2) MONTHS** of the mailing date of this decision, extendable under 37 CFR 1.136(a).

Any further correspondence with respect to this matter may be filed electronically via EFS-Web selecting the document description "Petition for review and processing by the PCT Legal Office" or by mail addressed to Mail Stop PCT, Commissioner for Patents, Office of PCT Legal Administration, P.O. Box 1450, Alexandria, Virginia 22313-1450, with the contents of the letter marked to the attention of the Office of PCT Legal Administration.

This application is being returned to Technology Center 1627 for further processing under 35 U.S.C. 111(a).

/George Dombroske/
George Dombroske
PCT Legal Examiner
Office of PCT Legal Administration
Tel: (571) 272-3283

UNITED STATES PATENT AND TRADEMARK OFFICE

0 7 JUN 2010

Commissioner for Patents
United States Patent and Trademark Office
P.O. Box 1450
Alexandria, VA 22313-1450
www.uspto.gov

Stuart D. Frenkel
Frenkel & Associates, P.C.
Suite 330
3975 University Drive
Fairfax VA 22030

In re Application of	:
Kobayashi et al.	:
Application No. 11/803,026	: DECISION ON PETITION
Filing Date: May 11, 2007	:
Atty. Docket No.: SDF 07-11	: UNDER 37 CFR 1.78(a)(3)
For: Preventive Or Therapeutic	:
Agent For Neuropathic Pain	:

This is a decision on the petition under 37 CFR 1.78(a)(3), filed March 24, 2010, to accept an unintentionally delayed claim under 35 U.S.C. §§ 120 and 365(c) for the benefit of priority to prior-filed PCT Application No. PCT/JP2005/020830, filed November 14, 2005, set forth in the amendment submitted concurrently with the instant petition, and supplemented on 03 June 2010..

The petition is **GRANTED**.

The present nonprovisional application was filed after November 29, 2000, and the claim herein for the benefit of priority to the above-noted, prior-filed PCT application is submitted after expiration of the period specified in 37 CFR 1.78(a)(2)(ii). Therefore, this is a proper petition under 37 CFR 1.78(a)(3).

A petition for acceptance of a claim for late priority under 37 CFR 1.78(a)(3) is only applicable to those applications filed on or after November 29, 2000. Further, the petition is appropriate only after the expiration of the period specified in 37 CFR 1.78(a)(2)(ii). In addition, the petition under 37 CFR 1.78(a)(3) must be accompanied by:

(1) the reference required by 35 U.S.C. § 120 and 37 CFR 1.78(a)(2)(i) of the prior-filed application, unless previously submitted;

(2) the surcharge set forth in § 1.17(t); and

(3) a statement that the entire delay between the date the claim was due under 37 CFR 1.78(a)(2)(ii) and the date the claim was filed was unintentional. The Director may require additional information where there is a question whether the delay was unintentional.

The petition complies with the requirements for a grantable petition under 37 CFR 1.78(a)(3) in that (1) a reference to the prior-filed nonprovisional applications has been included in an amendment to the first sentence of the specification following the title, as provided by 37 CFR 1.78(a)(2)(iii); (2) the surcharge fee required by 37 CFR 1.17(t) has been paid; and (3) the petition contains a statement of unintentional delay, which is being construed as a statement that "the entire delay between the date the claim was due under 37 CFR 1.78(a)(2)(ii) and the date the claim was filed was unintentional." Petitioner is required to notify this Office promptly if said construction is inaccurate. Accordingly, having found that the petition for acceptance of an unintentionally delayed claim for the benefit of priority under 35 U.S.C. §§ 120 and 365(c) to the prior-filed PCT application satisfies the conditions of 37 CFR 1.78(a)(3), the petition is granted.

The granting of the petition to accept the delayed benefit claim to the prior-filed application under 37 CFR 1.78(a)(3) should not be construed as meaning that this instant application is entitled to the benefit of the prior-filed application. In order for this application to be entitled to the benefit of the prior-filed application, all other requirements under 35 U.S.C. §§ 120 and 365(c) and 37 CFR 1.78(a)(1) and (a)(2) must be met. Similarly, the fact that the corrected Filing Receipt accompanying this decision on petition includes the prior-filed application should not be construed as meaning that applicant is entitled to the claim for benefit of priority to the prior-filed application noted thereon. Accordingly, the examiner will, in due course, consider this benefit claim and determine whether this application is entitled to the benefit of the earlier filing date.

A corrected Filing Receipt, which includes the priority claim to the prior-filed application, accompanies this decision on petition.

Any inquiries concerning this decision may be directed to George Dombroske at (571) 272-3283. All other inquiries concerning either the examination procedures or status of the application should be directed to the Technology Center.

This matter is being referred to the examiner of Technology Center Art Unit 1627 for appropriate action on the amendment filed March 24, 2010, including consideration of applicant's entitlement to claim benefit of priority under 35 U.S.C. §§ 120 and 365(c) to the prior-filed PCT application.

/George Dombroske/
George Dombroske
PCT Legal Examiner
Office of PCT Legal Administration

/Boris Milef/
Boris Milef
PCT Legal Examiner
Office of PCT Legal Administration

ATTACHMENT: Corrected Filing Receipt

UNITED STATES PATENT AND TRADEMARK OFFICE

Commissioner for Patents
United States Patent and Trademark Office
P.O. Box 1450
Alexandria, VA 22313-1450
www.uspto.gov

MEENAKSHISUNDARAM HARIHARAN
18806 HATTERAS ST # 106
TARZANA CA 91356

COPY MAILED

SEP 18 2007

OFFICE OF PETITIONS

In re Application of	:	
Hariharan, Meenakshisundaram	:	
Application No. 11/803,027	:	DECISION ON PETITION
Filed: May 11, 2007	:	TO MAKE SPECIAL UNDER
Attorney Docket No.	:	37 CFR 1.102(c)(1)

This is a decision on the petition under 37 CFR 1.102(c)(1), filed August 14, 2007, to make the above-identified application special based on applicant's age as set forth in M.P.E.P. § 708.02, Section IV.

The petition is **GRANTED**.

A grantable petition to make an application special under 37 CFR 1.102(c)(1) and MPEP § 708.02, Section IV: Applicant's Age must be accompanied by evidence showing that at least one of the applicants is 65 years of age, or more, such as a birth certificate or a statement by applicant. No fee is required

The instant petition includes the declaration of inventor Meenakshisundaram Hariharan, attesting to his age. Accordingly, the above-identified application will be accorded "special" status.

Telephone inquiries concerning this decision should be directed to Tredelle Jackson at 571-272-2783.

All other inquiries concerning either the examination or status of the application should be directed to the Technology Center.

This application is being referred to the Office of Initial Patent Examination for processing.
This application will be accorded "special" status when pre-examination processing is done.

Monica A Graves
Petitions Examiner
Office of Petitions

UNITED STATES PATENT AND TRADEMARK OFFICE

Commissioner for Patents
United States Patent and Trademark Office
P.O. Box 1450
Alexandria, VA 22313-1450
www.uspto.gov

JENNINGS, STROUSS & SALMON, P.L.C.
201 E. WASHINGTON ST., 11TH FLOOR
PHOENIX, AZ 85004

MAILED

MAR 23 2009

OFFICE OF PETITIONS

In re Application of	:	
SONES, Scott F.	:	
Application No. 11/803,050	:	DECISION ON PETITION
Filed: May 09, 2007	:	TO WITHDRAW
Attorney Docket No. **58550-2 CIP**	:	FROM RECORD
	:	

This is a decision on the Request to Withdraw as attorney or agent of record under 37 C.F.R. § 1.36(b), filed January 12, 2009.

The request is **APPROVED**.

A grantable request to withdraw as attorney/agent of record must be signed by every attorney/agent seeking to withdraw or contain a clear indication that one attorney is signing on behalf of another/others. The Office requires the practitioner(s) requesting withdrawal to certify that he, she, or they have: (1) given reasonable notice to the client, prior to the expiration of the response period, that the practitioner(s) intends to withdraw from employment; (2) delivered to the client or a duly authorized representative of the client all papers and property (including funds) to which the client is entitled; and (3) notified the client of any responses that may be due and the time frame within which the client must respond, pursuant 37 CFR 10.40(c).

The request was signed by Christine Mcauliffe on behalf of all attorneys of record. All attorneys/agents associated have been withdrawn. Applicant is reminded that there is no attorney of record at this time.

All future correspondence will be directed to the first named inventor Scott F. Sones at the address indicated below.

There is an outstanding Office action mailed August 07, 2008 that requires a reply from the applicant.

Telephone inquiries concerning this decision should be directed to Michelle R. Eason at 571-272-4231.

Michelle R. Eason
Paralegal Specialist
Office of Petitions

cc: **SCOTT SONES**
OPTION PHARMACEUTICALS
PO BOX 414
NILAND, CA 92267

UNITED STATES PATENT AND TRADEMARK OFFICE

Commissioner for Patents
United States Patent and Trademark Office
P.O. Box 1450
Alexandria, VA 22313-1450
www.uspto.gov

JAY CHESAVAGE
3833 MIDDLEFIELD
PALO ALTO CA 94303

COPY MAILED
AUG 16 2007
OFFICE OF PETITIONS

In re Application of	:	
Alexander P. Rutberg et al.	:	
Application No. 11/803,052	:	DECISION ON PETITION
Filed: May 11, 2007	:	TO MAKE SPECIAL UNDER
Attorney Docket No. RUTBERG-PLASMA GEN	:	37 CFR 1.102(c)(1)
	:	

This is a decision on the petition under 37 CFR 1.102(c)(1), filed June 15, 2007, to make the above-identified application special based on applicant's age as set forth in M.P.E.P. § 708.02, Section IV.

The petition is **GRANTED**.

A grantable petition to make an application special under 37 CFR 1.102(c)(1) and MPEP § 708.02, Section IV: Applicant's Age must be accompanied by evidence showing that at least one of the applicants is 65 years of age, or more, such as a birth certificate or a statement by applicant. No fee is required

The instant petition includes a copy of one of the applicants passport proving that he is 65 years of age or older. Accordingly, the above-identified application has been accorded "special" status.

Telephone inquiries concerning this decision should be directed to Terri Williams at 571-272-2991.

All other inquiries concerning either the examination or status of the application should be directed to the Technology Center.

The application is being forwarded to the Technology Center Art Unit 3742 for action on the merits commensurate with this decision.

T. Williams
Terri Williams
Petitions Examiner
Office of Petitions

UNITED STATES PATENT AND TRADEMARK OFFICE

Commissioner for Patents
United States Patent and Trademark Office
P.O. Box 1450
Alexandria, VA 22313-1450
www.uspto.gov

Leydig, Voit & Mayer, Ltd.
Two Prudential Plaza, Suite 4900
180 North Stetson Avenue
Chicago, IL 60601-6731

COPY MAILED

JAN 05 2009

OFFICE OF PETITIONS

In re Application of	:	
Joseph F. Bader	:	
Application No. 11/803,118	:	DECISION ON PETITION
Filed: May 11, 2007	:	TO WITHDRAW
Attorney Docket No. 258335	:	FROM RECORD
	:	

This is a decision on the Request to Withdraw as attorney or agent of record under 37 C.F.R. § 1.36(b), filed October 24, 2008.

The request is **APPROVED**.

A grantable request to withdraw as attorney/agent of record must be signed by every attorney/agent seeking to withdraw or contain a clear indication that one attorney is signing on behalf of another/others. A request to withdraw will not be approved unless at least 30 (thirty) days would remain between the date of approval and the later of the expiration date of a time to file a response or the expiration date of the maximum time period which can be extended under 37 C.F.R. § 1.136(a).

The request was signed by Paul J. Filbin on behalf of all attorneys/agents associated with customer number 23460. All attorneys/agents associated with customer number 23460 have been withdrawn.

Applicant is reminded that there is no attorney of record at this time.

The request to change the correspondence of record is not acceptable as the requested correspondence address is not that of (1) the first named signing inventor; or (2) an intervening assignee of the entire interest under 37 C.F.R. 3.71. Accordingly, all correspondence will be mailed to the first named signing inventor. A courtesy copy of this decision will be mailed to the address noted on the request. If this person(s) desire to receive future correspondence regarding this application, the proper power of attorney documents and/or a proper statement under 37 CFR 3.73(b) must be submitted.

Telephone inquiries concerning this decision should be directed to Kimberly Inabinet at 571-272-4618.

Kimberly Inabinet
Kimberly Inabinet
Petitions Examiner
Office of Petitions

cc: Joseph F. Bader
1925 East Rainbow Lane
Crete, IL 60417

cc: Merchants & Gould, P.C.
3200 IDS Center
80 South Eighth Street
Minneapolis, MN 55402

UNITED STATES PATENT AND TRADEMARK OFFICE

UNITED STATES DEPARTMENT OF COMMERCE
United States Patent and Trademark Office
Address: COMMISSIONER FOR PATENTS
P.O. Box 1450
Alexandria, Virginia 22313-1450
www.uspto.gov

APPLICATION NUMBER	FILING OR 371(C) DATE	FIRST NAMED APPLICANT	ATTY. DOCKET NO./TITLE
11/803,118	05/11/2007	Joseph F. Bader	258335

CONFIRMATION NO. 4678

POWER OF ATTORNEY NOTICE

23460
LEYDIG VOIT & MAYER, LTD
TWO PRUDENTIAL PLAZA, SUITE 4900
180 NORTH STETSON AVENUE
CHICAGO, IL 60601-6731

OC000000033897005

Date Mailed: 01/05/2009

NOTICE REGARDING CHANGE OF POWER OF ATTORNEY

This is in response to the Power of Attorney filed 10/24/2008.

- The withdrawal as attorney in this application has been accepted. Future correspondence will be mailed to the new address of record. 37 CFR 1.33.

/kainabinet/

Office of Data Management, Application Assistance Unit (571) 272-4000, or (571) 272-4200, or 1-888-786-0101

UNITED STATES PATENT AND TRADEMARK OFFICE

Commissioner for Patents
United States Patent and Trademark Office
P.O. Box 1450
Alexandria, VA 22313-1450
www.uspto.gov

HOWARD IP LAW GROUP
P.O. BOX 226
FORT WASHINGTON PA 19034

COPY MAILED

FEB 2 9 2008

OFFICE OF PETITIONS

In re Application of

LANDMANN, Wolf S.
Application No. 11/803,128
Filed: May 11, 2007
Attorney Docket No.

DECISION ON PETITION
TO WITHDRAW
FROM RECORD

This is a decision on the Request to Withdraw as attorney or agent of record under 37 C.F.R. § 1.36(b), filed January 10, 2008.

The request is **NOT APPROVED**.

A grantable request to withdraw as attorney/agent of record must be signed by every attorney/agent seeking to withdraw or contain a clear indication that one attorney is signing on behalf of another/others. A request to withdraw will not be approved unless at least 30 (thirty) days would remain between the date of approval and the later of the expiration date of a time to file a response or the expiration date of the maximum time period which can be extended under 37 C.F.R. § 1.136(a).

The Office cannot approve the request at this time since the reasons provided do not meet any of the conditions under the mandatory or permissive categories enumerated in 37 CFR 10.40. Section 10.40 of Title 37 of the Code of Federal Regulation states, "[a] practitioner shall not withdraw from employment in a proceeding before the Office without permission from the Office[.]" More specifically, 37 CFR 10.40 states, "[i]f paragraph (b) of this section is not applicable, a practitioner may not request permission to withdraw in matter pending before the Office unless such request or such withdrawal is" for one the permissive reasons listed in 37 CFR 10.40(c). The reasons set forth in the request, files were reassigned to the below mentioned firm, does not meet any of the conditions set forth in 37 CFR 10.40.

All future communications from the Office will continue to be directed to the above-listed address until otherwise notified by applicant.

Telephone inquiries concerning this decision should be directed to Tredelle Jackson at 571-272- 2783.

Monica A. Graves
Petitions Examiner
Office of Petitions

cc: **THE PLEVY LAW FIRM**
10 RUTGERS PLACE
TRENTON, NJ 08618

UNITED STATES PATENT AND TRADEMARK OFFICE

Commissioner for Patents
United States Patent and Trademark Office
P.O. Box 1450
Alexandria, VA 22313-1450
www.uspto.gov

KENYON & KENYON LLP
ONE BROADWAY
NEW YORK NY 10004

COPY MAILED

DEC 1 4 2007

OFFICE OF PETITIONS

In re Application of	:	
Evgeny Tsiperman et al	:	
Application No. 11/803,142	:	DECISION GRANTING
Filed: May 10, 2007	:	PETITION
Attorney Docket No. 1662/01502	:	

This is a decision on the petition, filed June 4, 2007, requesting that the above-identified application be accorded a filing date of May 10, 2007. The petition is properly treated as a petition under 37 CFR 1.10(c).

Petitioner alleges that the application was deposited in Express Mail Service on May 10, 2007. In support, the petition is accompanied by a copy of Express Mail receipt No. EL970493770US (the same Express Mail number found on the original application papers located in the official file) showing a "date in" of May 10, 2007.

The Office considers the date the paper or fee is shown to have been deposited as "Express Mail" to be the "date-in" on the Express Mail label; MPEP 513. The evidence is convincing that the application was deposited as "Express Mail" with the U. S. Postal Service on May 10, 2007.

In view of the above, the petition is **GRANTED**.

A corrected filing receipt was mailed on August 24, 2007 to indicate the filing date of **May 10, 2007**.

This application file is being referred to the Office of Initial Patent Examination (OIPE).

Telephone inquiries relating to this decision should be directed to the undersigned at (571) 272-3208. Telephone inquiries related to OIPE processing should be directed to their hotline at (571) 272-4100.

Karen Creasy

Karen Creasy
Petitions Examiner
Office of Petitions

UNITED STATES PATENT AND TRADEMARK OFFICE

Commissioner for Patents
United States Patent and Trademark Office
P.O. Box 14..
Alexandria, VA 22313-14..
www.uspto.gov

STMICROELECTRONICS, INC.
MAIL STATION 2346
1310 ELECTRONICS DRIVE
CARROLLTON TX 75006

COPY MAILED

DEC 1 8 2007

OFFICE OF PETITIONS

In re Application of
Zhang et al.
Application No. 11/803,152
Filed: May 11, 2007
Attorney Docket No. 05-SIN-075
Title: Piezo-Resistive Force Sensor with Bumps on Membrane Structure

DECISION REFUSING STATUS UNDER 37 CFR 1.47(a)

This is in response to the petition filed November 29, 2007 under 37 CFR. §1.47(b). Since there is at least one signing inventor, this petition is properly treated under 37 CFR 1.47(a).

The petition under 37 CFR. §1.47(a) is **DISMISSED**.

Rule 47 applicant is given TWO MONTHS from the mailing date of this decision to reply, correcting the below-noted deficiencies. Any reply should be entitled "Request for Reconsideration of Petition Under 37 CFR. §1.47(a)," and should only address the deficiencies noted below, except that the reply may include an oath or declaration executed by the non-signing inventor. **Failure to respond will result in abandonment of the application**. Any extensions of time will be governed by 37 CFR. §1.136(a).

The above-identified application was filed on May 11, 2007, without an executed oath or declaration. Accordingly, on July 26, 2007, applicant was mailed a "Notice to File Missing Parts of Nonprovisional Application - Filing Date Granted," requiring for the purposes of this decision an executed oath or declaration in compliance with §1.63, and a surcharge for its late filing. This Notice set an extendable two-month period for reply of September 26, 2007.

In reply, applicant filed a petition, the surcharge for late filing of the declaration, and a partially executed declaration. To make the reply timely a two month extension of time was submitted.

A grantable petition under 37 CFR. §1.47(a) requires: (1) proof that the non-signing inventor cannot be reached or refuses to sign the oath or declaration after having been presented with the application papers (specification, claims and drawings); (2) an acceptable oath or declaration in compliance with 35 U.S.C. §§115 and 116; (3) the petition fee; and (4) a statement of the last known address of the non-signing inventor. The instant petition does not satisfy requirement(s) (1) and (2).

As to item (1), Before a refusal can be alleged, applicant must demonstrate a bona fide attempt was made to present a copy of application papers (specification, including claims, drawings, and oath or declaration) to the non-signing inventor for signature, but the inventor refused to accept delivery of the papers or expressly stated that the application papers should not be sent, may be sufficient. See MPEP 409.03(d). When it is concluded by the 37 CFR 1.47 applicant that a nonsigning inventor's conduct constitutes a refusal, all facts upon which that conclusion is based should be stated in the statement of facts in support of the petition or directly in the petition. If there is documentary evidence to support facts alleged in the petition or in any statement of facts, such evidence should be submitted.

Petitioner contends that the non-signing inventor's actions constitute refusal or his unavailability. However petitioner has failed to provide sufficient evidence to establish that the petitioner has refused to execute the application papers. Petitioner sent the application papers via Federal Express. Petitioner has failed to establish that inventor Gandolfi continued to work/reside at the address where the application papers were mailed. The cover letter indicates there was doubt that the application papers would reach the inventor. Did 1.47 applicant attempt to confirm receipt via a phone call ? Did conduct an internet search to establish this was inventor's last known address?

To the extent petitioner contends that inventor Gandolfi is unavailable, petitioner has failed to provide evidence of "diligent effort" to locate the inventor.
In this regard, petitioner should, at the very least, conduct a search of the regional or national registry(s). The results of such search should be made in any future petition for reconsideration. *See* MPEP 409.03(d). Petitioner should state whether he has access to inventor Biffi's personnel records and, if so, what does inspection of the records reveal as to a current address, forwarding address, or an address of the nearest living relative? What does inspection of the phone directories for those address locations reveal? **The statements of facts must be signed, where at all possible, by a person having firsthand knowledge of the facts recited therein and should be accompanied by documentary evidence in support of the statement of facts.**

As to item (2), the signature block of inventor Zhang contains non-initialed alterations to the declaration. A newly executed declaration without alterations should be provided. Any changes made in ink in the application or oath prior to signing should be initialed and dated by the applicants prior to execution of the oath or declaration. The Office will not consider whether noninitialed and/or nondated alterations were made before or

after signing of the oath or declaration but will require a new oath or declaration. See MPEP 605.04(a).

The address on the petition differs from the correspondence address of record. If appropriate, a change of address should be filed in accordance with MPEP 601.03. A courtesy copy of this decision is being mailed to the address given on the petition. However, the Office will mail all future correspondence solely to the address of record.

Further correspondence with respect to this matter should be addressed as follows:

By mail:	Mail Stop Petition Commissioner for Patents P.O. Box 1450 Alexandria, VA 22313-1450
By facsimile:	(571) 273-8300
By delivery service: (FedEx, UPS, DHL, etc.)	U.S. Patent and Trademark Office Customer Service Window, Randolph Building 401 Dulany Street Alexandria, VA 22314

Telephone inquiries related to this decision may be directed to the undersigned at (571) 272-3215.

Charlema R. Grant

Charlema R. Grant
Petitions Attorney
Office of Petitions

cc: William A. Munck
P.O. Box 802432
Dallas, Texas 75380

UNITED STATES PATENT AND TRADEMARK OFFICE

Commissioner for Patents
United States Patent and Trademark Office
P.O. Box 1450
Alexandria, VA 22313-1450
www.uspto.gov

STMICROELECTRONICS, INC.
MAIL STATION 2346
1310 ELECTRONICS DRIVE
CARROLLTON TX 75006

COPY MAILED

MAR 20 2008

In re Application of	:
Zhang et al.	: DECISION NOTING JOINDER OF
Application No. 11/803,152	: INVENTOR AND PETITION
Filed: May 11, 2007	: UNDER 37 CFR 1.47(a)
Attorney Docket No. 05-SIN-075	:

Papers filed on February 21, 2008 in response to a "Decision Refusing Status Under 37 CFR 1.47(a)," mailed December 18, 2007, included a Declaration signed by a previously non-signing inventor, Biffi, in compliance with 37 CFR 1.63.

The petition is **DISMISSED AS MOOT**.

In view of the joinder of the inventor, further consideration under § 1.47(a) is not necessary. This application does not have any Rule 1.47 status and no such status should appear on the record for this file. This application need not be returned to this Office for any further consideration under 37 CFR 1.47(a).

This application is being referred to the Office of Patent Application Processing.

Telephone inquiries should be directed to the undersigned at (571) 272-3215.

Charlema Grant
Petitions Attorney
Office of Petitions

UNITED STATES PATENT AND TRADEMARK OFFICE

Commissioner for Patents
United States Patent and Trademark Office
P.O. Box 1450
Alexandria, VA 22313-1450
www.uspto.gov

STMICROELECTRONICS, INC.
MAIL STATION 2346
1310 ELECTRONICS DRIVE
CARROLLTON TX 75006

MAILED

JUN 2 2 2010

OFFICE OF PETITIONS

In re Application of	:	
Zhang et al.	:	
Application No. 11/803,152	:	ON PETITION
Filed: May 11, 2007	:	
Attorney Docket No. 05-SIN-075	:	

This is a decision on the petition under 37 CFR 1.181, filed April 26, 2010, requesting the withdrawal of the holding of abandonment in the above-identified application and has been so treated.

The petition to withdraw the holding of abandonment is **GRANTED.**

The above-identified application was held abandoned for failure to timely file an appeal brief (and fee required by 37 CFR 1.17(c)) within the time period provided in 37 CFR 1.192(a). A reply was due on or before February 22, 2010. A Notice of Abandonment was mailed on April 16, 2010.

Petitioner states that the reply was in fact timely filed. To support this assertion, petitioner has submitted a copy of the return postcard, which acknowledges receipt by the U.S. Patent and Trademark Office (USTPO) on April 5, 2010 of 1. Appeal Brief; 2. Petition for Extension of Time – one month; and 3) Check in the Amount of $670.00 for the Appeal Brief filing fee and one-month extension of time fee. Additionally, petitioner has supplied a copy of the previously mailed correspondence, which bears a certificate of mailing date of March 22, 2010.

The reply acknowledged as having been received in the USPTO on April 5, 2010 (certificate of mailing date of March 22, 2010) has been located in the application file. Accordingly, it is evident that the reply was timely received in the USPTO.

In view of the above, the holding of abandonment is hereby withdrawn and the application restored to pending status. A petition to withdraw the holding of abandonment under the provisions of 37 CFR 1.181 does not require a petition fee and none has been charged.

This matter is being referred to Technology Center AU 2855 for further examination on the merits.

Telephone inquiries concerning this decision should be directed to the undersigned at (571) 272-3206.

Liana Walsh
Petitions Examiner
Office of Petitions

UNITED STATES PATENT AND TRADEMARK OFFICE

Commissioner for Patents
United States Patent and Trademark Office
P.O. Box 1450
Alexandria, VA 22313-1450
www.uspto.gov

Sheehan, Phinney, Bass & Green, P.A.
1000 Elm Street
PO Box 3701
Manchester, NH 03105-3701

COPY MAILED

FEB 0 4 2008

OFFICE OF PETITIONS

In re Application of
Carl Bloksberg

Application No. 11/803,162
Filed: May 14, 2007
Attorney Docket No. fc-001

DECISION ON PETITION
TO WITHDRAW
FROM RECORD

This is a decision on the Request to Withdraw as attorney or agent of record under 37 C.F.R. § 1.36(b), filed September 27, 2007.

The request is **NOT APPROVED** as moot.

A review of the file record indicates that the power of attorney to Sheehan, Phinney, Bass & Green, P.A. has been revoked by the applicant of the patent application on September 27, 2007. Accordingly, the request to withdraw under 37 C.F.R. § 1.36(b) is moot.

All future communications from the Office will continue to be directed to the below-listed address until otherwise notified by applicant.

Telephone inquires concerning this decision should be directed to Terri Williams at 571-272-2991.

T. Williams
Terri Williams
Petitions Examiner
Office of Petitions

cc: **Francis Edward Marino**
394 Meredith Neck Road
Meredith, NH 03253

UNITED STATES PATENT AND TRADEMARK OFFICE

COMMISSIONER FOR PATENTS
UNITED STATES PATENT AND TRADEMARK OFFICE
P.O. BOX 1450
ALEXANDRIA, VA 22313-1450
www.uspto.gov
DIW Oct-07

AT&T CORP.
ROOM 2A207
ONE AT&T WAY
BEDMINSTER NJ 07921

COPY MAILED
OCT 24 2007
OFFICE OF PETITIONS

In re Application of Asher, Liublinska, and Stewart Application Number: 11/803283 Filed: 05/14/2007 Attorney Docket Number: 2006-A1363	: : : : : :	DECISION ON PETITION AND DECISION ACCORDING STATUS UNDER 37 CFR 1.47(a)

This is a decision on the petition filed on 21 September, 2007, under 37 CFR 1.53 requesting that the above-identified nonprovisional application, including three (3) sheets of drawings, be accorded a filing date of 14 May, 2007. This is also a decision on the petition under 37 CFR 1.47(a) filed on 21 September, 2007.

The petition is **GRANTED**.

The application was filed on 14 May, 2007. Accordingly, on 20 July, 2007, the Office of Patent Application Processing mailed a Notice of Incomplete Nonprovisional Application stating that the application had not been accorded a filing date because been deposited without drawings. Additionally, the Notice indicated that the signatures of Maryna Liublinkska and Harold Stewart were missing from the oath or declaration.

PETITION UNDER 37 CFR 1.53

In response, on 21 September, 2007, the present petition and a copy of three (3) sheets of drawings, were filed. Petitioner argues that three (3) drawing sheets was filed with the other application papers on 14 May, 2007, but were subsequently misplaced in the U.S. Patent and Trademark Office (Office). In support, a copy of petitioner's postcard receipt was supplied with the present petition. The postcard receipt shows an "Office-date" stamp dated "051407" and contains the above-identified application number. The postcard receipt identifies

the application by the attorney docket number and acknowledges receipt of, *inter alia*, three (3) sheet(s) of drawings. Petitioner request that the application, including the three (3) sheets of drawings, be accorded a filing date of 14 May, 2007. The three (3) sheets of drawings filed on 14 May, 2007, have been located in the application file. Therefore, the application, including three (3) sheets of drawings, is entitled to a filing date of 14 May, 2007.

In view of the above, the petition is granted. The Notice of Incomplete Nonprovisional Application is withdrawn. As the petition was necessitated by an error on the part of the Office, no petition fee is due. The fee paid will be refunded to counsel.

The application will be processed with the copy of the three (3) sheets of drawings filed on 14 May, 2007, as a part of the original disclosure. The copies of the drawings filed on 21 September, 2007, will not be processed or examined, but will be retained in the application file.

PETITION UNDER 37 CFR 1.47(a)

Petitioners have shown that the non-signing inventor could not be located despite diligent efforts. Specifically, petitioners have shown that a copy of the application was sent to the non-signing inventors, Maryna Liublinska and Harold Stewart. However, the non-signing inventors failed to sign and return the declaration naming them as joint inventors along with Michael Asher.

The above-identified application and papers have been reviewed and found in compliance with 37 CFR 1.47(a). This application is hereby accorded Rule 1.47(a) status.

As provided in Rule 1.47(c), this Office will forward notice of this application's filing to the non-signing inventor at the address given in the Declaration. Notice of the filing of this application will also be published in the *Official Gazette*.

The application is being referred to the Office of Patent Application Processing for further processing with a filing date of 14 May, 2007, using the application papers filed on that date, and the copy of three (3) sheets of drawings supplied with the present petition, and for an indication in Office records that three (3) sheets of drawings were present on filing.

Telephone inquiries specific to this matter should be directed to the undersigned at 571 272-3231.

D Wood

Douglas I. Wood
Senior Petitions Attorney
Office of Petitions

UNITED STATES PATENT AND TRADEMARK OFFICE

COMMISSIONER FOR PATENTS
UNITED STATES PATENT AND TRADEMARK OFFICE
P.O. BOX 1450
ALEXANDRIA, VA 22313-1450
www.uspto.gov
DIW Oct-07

COPY MAILED

OCT 24 2007

OFFICE OF PETITIONS

Maryna Liublinska
1236 Beacon St., Apt. 2
Brookline MA 02446

In re Application of
Asher et al.
Application No. 11/803,283
Filed: 14 May, 2007
For: METHOD AND APPARATUS FOR AUTOMATICALLY MANAGING WORK TICKETS

Dear Ms. Liublinska:

You are named as a joint inventor in the above identified United States patent application, filed under the provisions of 35 U.S.C. 116 (United States Code), and 37 CFR 1.47(a), Rules of Practice in Patent Cases. Should a patent be granted on the application you will be designated therein as a joint inventor.

As a named inventor you are entitled to inspect any paper in the file wrapper of the application, order copies of all or any part thereof (at a prepaid cost per 37 CFR 1.19) or make your position of record in the application. Alternatively, you may arrange to do any of the preceding through a registered patent attorney or agent presenting written authorization from you. If you care to join the application, counsel of record (see below) would presumably assist you. Joining in the application would entail the filing of an appropriate oath or declaration by you pursuant to 37 CFR 1.63.

Telephone inquiries regarding this communication should be directed to the undersigned at 571/272-3231. Requests for information regarding your application should be directed to the File Information Unit at 571-272-3150. Information regarding how to pay for and order a copy of the application, or a specific paper in the application, should be directed to Certification Division at 571-272-3150 or 1-800-972-6382 (outside the Washington D.C. area).

D Wood

Douglas I. Wood
Senior Petitions Attorney
Office of Petitions

AT&T CORP.
ROOM 2A207
ONE AT&T WAY
BEDMINSTER NJ 07921

UNITED STATES PATENT AND TRADEMARK OFFICE

COMMISSIONER FOR PATENTS
UNITED STATES PATENT AND TRADEMARK OFFICE
P.O. BOX 1450
ALEXANDRIA, VA 22313-1450
www.uspto.gov
DIW Oct-07

Harold Stewart
4455 Ashworth Drive
Cumming GA 30040

COPY MAILED

OCT 24 2007

OFFICE OF PETITIONS

In re Application of
Asher et al.
Application No. 11/803,283
Filed: 14 May, 2007
For: METHOD AND APPARATUS FOR AUTOMATICALLY MANAGING WORK TICKETS

Dear Mr. Stewart:

You are named as a joint inventor in the above identified United States patent application, filed under the provisions of 35 U.S.C. 116 (United States Code), and 37 CFR 1.47(a), Rules of Practice in Patent Cases. Should a patent be granted on the application you will be designated therein as a joint inventor.

As a named inventor you are entitled to inspect any paper in the file wrapper of the application, order copies of all or any part thereof (at a prepaid cost per 37 CFR 1.19) or make your position of record in the application. Alternatively, you may arrange to do any of the preceding through a registered patent attorney or agent presenting written authorization from you. If you care to join the application, counsel of record (see below) would presumably assist you. Joining in the application would entail the filing of an appropriate oath or declaration by you pursuant to 37 CFR 1.63.

Telephone inquiries regarding this communication should be directed to the undersigned at 571/272-3231. Requests for information regarding your application should be directed to the File Information Unit at 571-272-3150. Information regarding how to pay for and order a copy of the application, or a specific paper in the application, should be directed to Certification Division at 571-272-3150 or 1-800-972-6382 (outside the Washington D.C. area).

D Wood
Douglas I. Wood
Senior Petitions Attorney
Office of Petitions

AT&T CORP.
ROOM 2A207
ONE AT&T WAY
BEDMINSTER NJ 07921

UNITED STATES PATENT AND TRADEMARK OFFICE

Commissioner for Patents
United States Patent and Trademark Office
P.O. Box 1450
Alexandria, VA 22313-1450
www.uspto.gov

FINNEGAN, HENDERSON,
FARABOW, GARRETT & DUNNER LLP
901 NEW YORK AVENUE, NW
WASHINGTON DC 20001-4413

COPY MAILED

SEP 2 6 2007

OFFICE OF PETITIONS

In re Application of
Hakan Swahn
Application No. 11/803285
Filing or 371(c) Date: 05/07/2007
Attorney Docket No. 08806.0173-01

DECISION ON PETITION

This is a decision on the petition to grant filing date under 37 CFR 1.17(f) and Request for Refund of Petition Fee, filed June 26, 2007, requesting that the Office accord the present application a filing date of May 7, 2007.

The petition is granted.

On May 7, 2007, applicants deposited the above-identified application. On June 12, 2007, the Office of Initial Patent Examination mailed a Notice of Incomplete Nonprovisional Application, stating that the application had not been accorded a filing date as it was filed without a specification. The Notice further stated that the filing date would be the date of receipt of the specification in the United States Patent and Trademark Office. The Notice set forth a two-month period for reply from the mail date of the Notice.

In the present petition, applicants filed a copy of a return receipt postcard and a copy of International Patent Publication No. WO 2004/012327, which applicants state is part of a complete copy of the papers as submitted on May 7, 2007.

A review of the file indicates that the Office received a copy of International Patent Publication No. WO 2004/012327[1] on May 7, 2007. Therefore, the application may be accorded a filing date of May 7, 2007.

This matter is being referred to the Office of Initial Patent Examination to accord the application a filing date of May 7, 2007, using as the specification the copy of International Patent Publication No. WO 2004/012327, filed on that date, as part of the original disclosure.

[1] Although the specification was located in the file, the specification was filed as part of the International Patent Publication No. WO 2004/012327. Because the specification was filed in this format, special processing was necessitated. Therefore, the petition fee has been charged to the Deposit Account.

Any inquiries related to this decision should be directed to the undersigned at (571) 272-3232.

Derek L. Woods
Senior Petitions Attorney
Office of Petitions

UNITED STATES PATENT AND TRADEMARK OFFICE

Commissioner for Patents
United States Patent and Trademark Office
P.O. Box 1450
Alexandria, VA 22313-1450
www.uspto.gov

MAILED

MAY 20 2010

OFFICE OF PETITIONS

Wayne M. Kennard
28 Partridge Road
Lexington MA 02421

In re Application of	:	
Lindsey E. Kennard, et al.	:	
Application No. 11/803,299	:	DECISION ON PETITION
Filed: March 14, 2007	:	
Attorney Docket No. **KENN-3**	:	

This is a decision on the petition under the unintentional provisions of 37 CFR 1.137(b), filed March 17, 2010, to revive the above-identified application.

The petition is **GRANTED**.

The application became abandoned for failure to reply in a timely manner to the non-final Office action mailed, September 3, 2009, which set a shortened statutory period for reply of three (3) months. No extensions of time under the provisions of 37 CFR 1.136(a) were obtained. Accordingly, the application became abandoned on December 4, 2009. The Notice of Abandonment was mailed March 17, 2010.

The petition satisfies the requirements of 37 CFR 1.137(b) in that petitioner has supplied (1) the reply in the form of an amendment, (2) the petition fee of $810, and (3) a proper statement of unintentional delay.

It is not apparent whether the person signing the statement of unintentional delay was in a position to have firsthand or direct knowledge of the facts and circumstances of the delay at issue. Nevertheless, such statement is being treated as having been made as the result of a reasonable inquiry into the facts and circumstances of such delay. See 37 CFR 10.18(b) and Changes to Patent Practice and Procedure; Final Rule Notice, 62 Fed. Reg. 53131, 53178 (October 10, 1997), 1203 Off. Gaz. Pat. Office 63, 103 (October 21, 1997). In the event that such an inquiry has not been made, petitioner must make such an inquiry. If such inquiry results in the discovery that it is not correct that the entire delay in filing the required reply from the due date for the reply until the filing of a grantable petition pursuant to 37 CFR 1.137(b) was unintentional, petitioner must notify the Office.

An extension of time under 37 CFR 1.136 must be filed prior to the expiration of the maximum extendable period for reply. See In re Application of S., 8 USPQ2d 1630, 1631 (Comm'r Pats. 1988). Since the $865 extension of time fee submitted with the petition on March 17, 2010 was subsequent to the maximum extendable period for reply, petitioner may request a refund of this fee by writing to the following address: Mail Stop 16, Commissioner for Patents, P. O. Box 1450, Alexandria, VA 22313-1450. A copy of this decision should accompany petitioner's request.

Telephone inquiries concerning this decision should be directed to Terri Johnson at (571) 272-2991.

This application is being referred to Technology Center AU 2835 for appropriate action by the Examiner in the normal course of business on the reply received.

Terri Johnson

Terri Johnson
Petitions Examiner
Office of Petitions

UNITED STATES PATENT AND TRADEMARK OFFICE

Commissioner for Patents
United States Patent and Trademark Office
P.O. Box 1450
Alexandria, VA 22313-1450
www.uspto.gov

WILLIAMS MULLEN
222 CENTRAL PARK AVENUE
SUITE 1700
VIRGINIA BEACH VA 23462

COPY MAILED

APR 2 5 2008

OFFICE OF PETITIONS

In re Application of	:	
Beauglehole et al.	:	
Application No. 11/803312	:	ON PETITION
Filing or 371(c) Date: 05/14/2007	:	
Attorney Docket Number: 029514.0075	:	

This is a decision on the Petition for Revival of an Application for Patent Abandoned Unintentionally Under 37 C.F.R. § 1.137(b), filed March 11, 2008.

This Petition is hereby **granted**.

The above-identified application became abandoned for failure to timely and properly reply to the non-final Office action, mailed September 7, 2007. The Office action set a three (3) period for reply. Extensions of time under 37 CFR 1.136(a) were available. No complete and proper reply having been received, the application became abandoned on December 8, 2007. The mailing of this Decision precedes the mailing of a Notice of Abandonment.

The petition satisfies the requirements of 37 CFR 1.137(b) in that petitioner has supplied (1) the reply in the form of a continuing application under 37 CFR 1.53(b); (2) the petition fee; and (3) a proper statement of unintentional delay.

This application is being revived solely for purposes of continuity. As continuity has been established by this decision, the application is again abandoned in favor of continuation application No. 12/049,801, filed march 17, 2008.

It is noted that Applicant filed a three (3) month extension of time with the petition. Applicant is advised that an extension of time is only available to extend the period to reply to an Office action during the extendable period. Once the reply period, including the maximum extendable period, has lapsed, the application becomes abandoned (as of the day after the reply was due). No extensions of time are available. This Office inadvertently charged applicant the fee for a petition to revive under 37 CFR 1.137(a) based upon unavoidable delay, $255.00. That fee, along with the fee for a three (3) month extension of time ($525.00), has been applied to the fee for a petition to revive under 37 CFR 1.137(b).

Applicant is referred to 37 CFR 1.26(a) for questions regarding a refund.

Telephone inquiries concerning this decision should be directed to the undersigned at (571) 272-3232.

Derek L. Woods
Attorney
Office of Petitions

UNITED STATES PATENT AND TRADEMARK OFFICE

Commissioner for Patents
United States Patent and Trademark Office
P.O. Box 1450
Alexandria, VA 22313-1450
www.uspto.gov

COPY MAILED

JUL 0 7 2008

OFFICE OF PETITIONS

HO-YUAN YU
19308 VENDURA CT.
SARATOGA, CA 95070

In re Application of :
Ho-Yuan Yu :
Application No. 11/803,350 :
Filed: May 14, 2007 :
Attorney Docket No. :

ON PETITION

This is a decision on the petition, filed March 9, 2008 under 37 CFR 1.137(b) to revive the above-identified application.

The petition is **DISMISSED.**

Any request for reconsideration of this decision must be submitted within TWO (2) MONTHS from the mail date of this decision. Extensions of time under 37 CFR 1.136(a) are permitted. The reconsideration request should include a cover letter entitled "**Renewed Petition under 37 CFR 1.137(b)**." This is **not** final agency action within the meaning of 5 U.S.C. § 704.

The above-identified application became abandoned for failure to reply in a timely manner to the Notice of Missing Parts of Nonprovisional Application (Notice) mailed June 20, 2007. The Notice set a period for reply of two (2) months from the mail date of the Notice. No extension of time under the provisions of 37 CFR 1.136(a) were obtained. Accordingly, the above-identified application became abandoned on August 21, 2007.

A grantable petition under 37 CFR 1.137(b) must be accompanied by: (1) the required reply, unless previously filed; (2) the petition fee as set forth in 37 CFR 1.17(m); (3) a statement that the entire delay in filing the required reply from the due date for the reply until the filing of a grantable petition pursuant to 37 CFR 1.137(b) was unintentional; and (4) any terminal disclaimer (and fee as set forth in 37 CFR 1.20(d)) required by 37 CFR 1.137(c). Where there is a question as to whether either the abandonment or the delay in filing a petition under 37 CFR 1.137 was unintentional, the Commissioner may require additional information. See MPEP 711.03(c)(III)(C) and (D). The instant petition lack(s) item(s) (1).

The Office record show petitioner submitted $90 by check on March 9, 2008. Effective September 30, 2007, the Independent claims (small entity) fee is $105. The $90 has been applied toward the Independent claims, which leave a balance of $15. This petition can not be revive until the $15 balance is received.

Further correspondence with respect to this matter should be addressed as follows:

By mail: Mail Stop PETITION
Commissioner for Patents
Post Office Box 1450
Alexandria, VA 22313-1450

By hand: Customer Service Window
Randolph Building
401 Dulany Street
Alexandria, VA 22314

By facsimile: (571) 273-8300
ATTN: Office of Petitions

Telephone inquiries concerning this decision should be directed to the undersigned at (571) 272-3210.

Irvin Dingle
Petitions Examiner
Office of Petitions

UNITED STATES PATENT AND TRADEMARK OFFICE

UNITED STATES DEPARTMENT OF COMMERCE
United States Patent and Trademark Office
Address: COMMISSIONER FOR PATENTS
P.O. Box 1450
Alexandria, Virginia 22313-1450
www.uspto.gov

KENYON & KENYON LLP
ONE BROADWAY
NEW YORK, NY 10004

Mail Date: 04/21/2010

Applicant	: Takuya Tsukagoshi	: DECISION ON REQUEST FOR
Patent Number	: 7643229	: RECALCULATION of PATENT
Issue Date	: 01/05/2010	: TERM ADJUSTMENT IN VIEW
Appliction No	: 11/803,431	: OF WYETH AND NOTICE OF INTENT TO
Filed	: 05/14/2007	: ISSUE CERTIFICATE OF CORRECTION
		:

The Request for Recalculation is **GRANTED** to the extent indicated.

The patent term adjustment has been determined to be **0** days. The USPTO will *sua sponte* issue a certificate of correction reflecting the amount of PTA days determined by the recalculation.

Prior to the issuance of the certificate of correction, the USPTO will afford patentee an opportunity to be heard and request reconsideration. Accordingly, patentee has **one month or thirty (30) days**, whichever is longer, to file a request for reconsideration of this patent term adjustment calculation. See 35 U.S.C. 154(b)(3)(B)(ii) and 37 CFR 1.322(a)(4). No extensions of time will be granted under 37 CFR 1.136.

Patentee should use document code PET.OP if electronically filing a request for reconsideration of this patent term adjustment calculation. The patentee must also include the information required by 37 CFR 1.705(b)(2) and the fee required by 37 CFR 1.18(e). If patentee does not file a timely request for reconsideration of this patent term adjustment calculation including the information required by 37 CFR 1.705(b)(2) and the fee required by 37 CFR 1.18(e), the USPTO will issue a certificate of correction reflecting the PTA determination noted above.

Patentee should be aware that in order to preserve the right to review in the United States District Court for the District of Columbia of the USPTO patent term adjustment determination, patentee must ensure that he or she also take the steps required under 35 U.S.C. 154(b)(4)(A) in a timely manner. Nothing in the request for recalculation should be construed as providing an alternative time frame for commencing a civil action under 35 U.S.C. 154(b)(4)(A).

Any questions concerning this decision should be directed to the Office of Patent Legal Administration at 571-272-7702.

UNITED STATES PATENT AND TRADEMARK OFFICE

UNITED STATES DEPARTMENT OF COMMERCE
United States Patent and Trademark Office
Address: COMMISSIONER FOR PATENTS
P.O. Box 1450
Alexandria, Virginia 22313-1450
www.uspto.gov

APPLICATION NO.	FILING DATE	FIRST NAMED INVENTOR	ATTORNEY DOCKET NO.	CONFIRMATION NO.
11/803,436	05/15/2007	Hyun-Jeong Kang	1235-428	6551

7590 01/08/2010
THE FARRELL LAW FIRM, LLP
290 Broadhollow Road
Suite 210E
Melville, NY 11747

EXAMINER
JACKSON, BLANE J

ART UNIT	PAPER NUMBER
2618	

MAIL DATE	DELIVERY MODE
01/08/2010	PAPER

DECISION GRANTING PETITION UNDER 37 CFR 1.138(d)

The declaration of express abandonment is recognized

This is in response to the petition under 37 CFR 1.138(d), requesting for a refund of any previously paid search fee and excess claims fee in the above-identified application.

The petition is granted.

The express abandonment is recognized. Any previously paid search fee and excess claims fee are hereby refunded.

Telephone inquiries should be directed to the Office of Data Management at (571) 272-4200.

Betty Powell

Patent Publication Branch
Office of Data Management

FORM PET651G (Rev. 08/07)

UNITED STATES PATENT AND TRADEMARK OFFICE

Commissioner for Patents
United States Patent and Trademark Office
P.O. Box 1450
Alexandria, VA 22313-1450
www.uspto.gov

MARTINE PENILIA & GENCARELLA, LLP
710 LAKEWAY DRIVE, SUITE 200
SUNNYVALE, CA 94085

MAILED

JUN 22 2009

OFFICE OF PETITIONS

In re Application of	:	
Seokmin Yun et al	:	
Application No. 11/803,501	:	DECISION ON PETITION
Filed: May 14, 2007	:	UNDER 37 CFR 1.137(b)
Attorney Docket No. LAM2P600	:	

This is a decision on the petition, filed May 19, 2009, which is being treated as a petition under 37 CFR 1.137(b) to revive the instant nonprovisional application for failure to timely notify the U.S. Patent and Trademark (USPTO) of the filing of an application in a foreign country, or under a multinational treaty that requires publication of applications eighteen months after filing. *See* 37 CFR 1.137(f).

The petition is **GRANTED**.

Petitioner states that the instant nonprovisional application is the subject of an application filed in an eighteen-month publication country on May 7, 2008. However, the USPTO was unintentionally not notified of this filing within 45 days subsequent to the filing of the subject application in an eighteen-month publication country.

In view of the above, this application became abandoned pursuant to 35 U.S.C. § 122(b)(2)(B)(iii) and 37 CFR 1.213(c) for failure to timely notify the Office of the filing of an application in a foreign country or under a multilateral international agreement that requires publication of applications 18 months after filing.

A petition to revive an application abandoned pursuant to 35 U.S.C. 122(b)(2)(B)(iii) for failure to notify the USPTO of a foreign filing must be accompanied by:

(1) the required reply which is met by the notification of such filing in a foreign country or under a multinational treaty;
(2) the petition fee as set forth in 37 CFR 1.17(m); and
(3) a statement that the entire delay in filing the required reply from the due date of the reply until the filing of a grantable petition was unintentional.

The instant petition has been found to be in compliance with 37 CFR 1.137(b). Accordingly, the failure to timely notify the USPTO of a foreign or international filing within 45 days after the date of filing of such foreign or international application as provided by 35 U.S.C. § 122(b)(2)(B)(iii) and 37 CFR 1.213(c) is accepted as having been unintentionally delayed.

The previous Request and Certification under 35 U.S.C. § 122(b)(2)(B)(i) has been rescinded. A Notice Regarding Rescission of Nonpublication Request accompanies this decision on petition.

Telephone inquiries concerning this decision should be directed to Irvin Dingle at (571) 272-3210.

This application is being referred to Technology Center AU 1792 for further processing.

Irvin Dingle
Petition Examiner
Office of Petitions

ATTACHMENT: Notice Regarding Rescission of Nonpublication Request

UNITED STATES PATENT AND TRADEMARK OFFICE

UNITED STATES DEPARTMENT OF COMMERCE
United States Patent and Trademark Office
Address: COMMISSIONER FOR PATENTS
P.O. Box 1450
Alexandria, Virginia 22313-1450
www.uspto.gov

APPLICATION NUMBER	FILING OR 371(C) DATE	FIRST NAMED APPLICANT	ATTY. DOCKET NO./TITLE
11/803,501	05/14/2007	Seokmin Yun	LAM2P600

CONFIRMATION NO. 6996

25920
MARTINE PENILLA & GENCARELLA, LLP
710 LAKEWAY DRIVE
SUITE 200
SUNNYVALE, CA 94085

NONPUBLICATION RESCISSION LETTER

OC000000036577914

Date Mailed: 06/19/2009

Communication Regarding Rescission Of Nonpublication Request and/or Notice of Foreign Filing

Applicant's rescission of the previously-filed nonpublication request and/or notice of foreign filing is acknowledged. The paper has been reflected in the Patent and Trademark Office's (USPTO's) computer records so that the earliest possible projected publication date can be assigned.

The projected publication date is 10/01/2009.

If applicant rescinded the nonpublication request before or on the date of "foreign filing,"[1] then no notice of foreign filing is required.

If applicant foreign filed the application after filing the above application and before filing the rescission, and the rescission did not also include a notice of foreign filing, then a notice of foreign filing (not merely a rescission) is required to be filed within 45 days of the date of foreign filing. See 35 U.S.C. § 122(b)(2)(B)(iii), and Clarification of the United States Patent and Trademark Office's Interpretation of the Provisions of 35 U.S.C. § 122(b)(2)(B)(ii)-(iv), 1272 Off. Gaz. Pat. Office 22 (July 1, 2003).

If a notice of foreign filing is required and is not filed within 45 days of the date of foreign filing, then the application becomes abandoned pursuant to 35 U.S.C. § 122(b)(2)(B)(iii). In this situation, applicant should either file a petition to revive or notify the Office that the application is abandoned. See 37 CFR 1.137(f). Any such petition to revive will be forwarded to the Office of Petitions for a decision. Note that the filing of the petition will not operate to stay any period of reply that may be running against the application.

Questions regarding petitions to revive should be directed to the Office of Petitions at (571) 272-3282.

[1] Note, for purpose of this notice, that "foreign filing" means "filing an application directed to the same invention in another country, or under a multilateral international agreement, that requires publication of applications 18 months after filing".

/idingle/

Office of Data Management, Application Assistance Unit (571) 272-4000, or (571) 272-4200, or 1-888-786-0101

UNITED STATES PATENT AND TRADEMARK OFFICE

Commissioner for Patents
United States Patent and Trademark Office
P.O. Box 1450
Alexandria, VA 22313-1450
www.uspto.gov

ROPES & GRAY LLP
PATENT DOCKETING 39/361
1211 AVENUE OF THE AMERICAS
NEW YORK NY 10036-8704

COPY MAILED

SEP 19 2007

OFFICE OF PETITIONS

In re Application of	:	
Biswas et al.	:	
Application No. 11/803,535	:	DECISION GRANTING PETITION
Filed: May 14, 2007	:	UNDER 37 CFR 1.137(b)
Attorney Docket No. MP1089	:	

This is a decision on the petition, filed September 5, 2007, which is being treated as a petition under 37 CFR 1.137(b) to revive the instant non-provisional application for failure to timely notify the U.S. Patent and Trademark (USPTO) of the filing of an application in a foreign country, or under a multinational treaty that requires publication of applications eighteen months after filing. *See* 37 CFR 1.137(f).

The petition is **GRANTED**.

Petitioner states that the instant nonprovisional application is the subject of an application filed in an eighteen-month publication country on June 22, 2007. However, the USPTO was unintentionally not notified of this filing within 45 days subsequent to the filing of the subject application in an eighteen-month publication country.

In view of the above, this application became abandoned pursuant to 35 U.S.C. § 122(b)(2)(B)(iii) and 37 CFR 1.213(c) for failure to timely notify the Office of the filing of an application in a foreign country or under a multilateral international agreement that requires publication of applications 18 months after filing.

A petition to revive an application abandoned pursuant to 35 U.S.C. 122(b)(2)(B)(iii) for failure to notify the USPTO of a foreign filing must be accompanied by:

(1) the required reply which is met by the notification of such filing in a foreign country or under a multinational treaty;
(2) the petition fee as set forth in 37 CFR 1.17(m); and
(3) a statement that the entire delay in filing the required reply from the due date of the reply until the filing of a grantable petition was unintentional.

The instant petition has been found to be in compliance with 37 CFR 1.137(b). Accordingly, the failure to timely notify the USPTO of a foreign or international filing within 45 days after the date of filing of such foreign or international application as provided by 35 U.S.C. § 122(b)(2)(B)(iii) and 37 CFR 1.213(c) is accepted as having been unintentionally delayed.

The previous Request and Certification under 35 U.S.C. § 122(b)(2)(B)(i) has been rescinded. A Notice Regarding Rescission of Nonpublication Request which sets forth the projected publication date of December27, 2007, accompanies this decision on petition.

This application is being forwarded to Technology Center Art Unit 2621 for examination in due course.

Telephone inquiries concerning this decision should be directed to the undersigned at (571) 272-3206.

Liana Walsh
Petitions Examiner
Office of Petitions

ATTACHMENT: Notice Regarding Rescission of Nonpublication Request

UNITED STATES PATENT AND TRADEMARK OFFICE

UNITED STATES DEPARTMENT OF COMMERCE
United States Patent and Trademark Office
Address: COMMISSIONER FOR PATENTS
P.O. Box 1450
Alexandria, Virginia 22313-1450
www.uspto.gov

APPLICATION NUMBER	FILING/RECEIPT DATE	FIRST NAMED APPLICANT	ATTY. DOCKET NO.
11/803,535	05/14/2007	Mainak Biswas	MP1089

CONFIRMATION NO. 7231

45510
ROPES & GRAY LLP
PATENT DOCKETING 39/361
1211 AVENUE OF THE AMERICAS
NEW YORK, NY 10036-8704

Date Mailed: 09/17/2007

Communication Regarding Rescission Of Nonpublication Request and/or Notice of Foreign Filing

Applicant's rescission of the previously-filed nonpublication request and/or notice of foreign filing is acknowledged. The paper has been reflected in the Patent and Trademark Office's (USPTO's) computer records so that the earliest possible projected publication date can be assigned.

The projected publication date is 12/27/2007.

If applicant rescinded the nonpublication request before or on the date of "foreign filing,"[1] then no notice of foreign filing is required.

If applicant foreign filed the application after filing the above application and before filing the rescission, and the rescission did not also include a notice of foreign filing, then a notice of foreign filing (not merely a rescission) is required to be filed within 45 days of the date of foreign filing. See 35 U.S.C. § 122(b)(2)(B)(iii), and Clarification of the United States Patent and Trademark Office's Interpretation of the Provisions of 35 U.S.C. § 122(b)(2)(B)(ii)-(iv), 1272 Off. Gaz. Pat. Office 22 (July 1, 2003).

If a notice of foreign filing is required and is not filed within 45 days of the date of foreign filing, then the application becomes abandoned pursuant to 35 U.S.C. § 122(b)(2)(B)(iii). In this situation, applicant should either file a petition to revive or notify the Office that the application is abandoned. See 37 CFR 1.137(f). Any such petition to revive will be forwarded to the Office of Petitions for a decision. Note that the filing of the petition will not operate to stay any period of reply that may be running against the application.

Questions regarding petitions to revive should be directed to the Office of Petitions at (571) 272-3282. Questions regarding publications of patent applications should be directed to the patent application publication hotline at (703) 605-4283 or by e-mail pgpub@uspto.gov.

[1] Note, for purpose of this notice, that "foreign filing" means "filing an application directed to the same invention in another country, or under a multilateral international agreement, that requires publication of applications 18 months after filing".

UNITED STATES PATENT AND TRADEMARK OFFICE

Commissioner for Patents
United States Patent and Trademark Office
P.O. Box 1450
Alexandria, VA 22313-1450
www.uspto.gov

BEIRNE, MAYNARD & PARSONS, L.L.P.
STE. 2500
1300 POST OAK BLVD.
HOUSTON TX 77056-3000

COPY MAILED

MAR 0 2 2009

OFFICE OF PETITIONS

In re Application of

WARDLAW, Louis J.
Application No. 11/803,544
Filed: May 15, 2007
Attorney Docket No. **002663.000156**

DECISION ON PETITION
TO WITHDRAW
FROM RECORD

This is a decision on the Request to Withdraw as attorney or agent of record under 37 C.F.R. § 1.36(b), filed January 26, 2009.

The request is **NOT APPROVED**.

The Office has revised its change in procedure for request to withdraw from representation applies to requests filed on or after May 12, 2008.

A grantable request to withdraw as attorney/agent of record must be signed by every attorney/agent seeking to withdraw or contain a clear indication that one attorney is signing on behalf of another/others. The Office requires the practitioner(s) requesting withdrawal to certify that he, she, or they have: (1) given reasonable notice to the client, prior to the expiration of the response period, that the practitioner(s) intends to withdraw from employment; (2) delivered to the client or a duly authorized representative of the client all papers and property (including funds) to which the client is entitled; and (3) notified the client of any responses that may be due and the time frame within which the client must respond, pursuant 37 CFR 10.40(c).

The request cannot be approved because there is no indication that acts (1) thru (3) noted in the above-identified certifications have been performed. See PTO/SB/83 (11-08).

All future communications from the Office will continue to be directed to the above-listed address until otherwise notified by applicant.

Telephone inquiries concerning this decision should be directed to Tredelle Jackson at 571-272- 2783.

Tredelle D. Jackson
Paralegal Specialist
Office of Petitions

cc: **HOT-HET, INC.**
ATTN: MR. SAMER ALAZEM
5322 HH ADDICKS-SATSUMA ROAD
HOUSTON TX 77284-0305

UNITED STATES PATENT AND TRADEMARK OFFICE

Commissioner for Patents
United States Patent and Trademark Office
P.O. Box 1450
Alexandria, VA 22313-1450
www.uspto.gov

BEIRNE, MAYNARD & PARSONS, L.L.P.
STE. 2500
1300 POST OAK BLVD.
HOUSTON TX 77056-3000

COPY MAILED

MAR 2 6 2009

OFFICE OF PETITIONS

In re Application of

WARDLAW, Louis J.
Application No. 11/803,544
Filed: May 16, 2007
Attorney Docket No. **002663.000156**

DECISION ON PETITION
TO WITHDRAW
FROM RECORD

This is a decision on the Request to Withdraw as attorney or agent of record under 37 C.F.R. § 1.36(b), filed March 03, 2009.

The request is **APPROVED**.

A grantable request to withdraw as attorney/agent of record must be signed by every attorney/agent seeking to withdraw or contain a clear indication that one attorney is signing on behalf of another/others. The Office requires the practitioner(s) requesting withdrawal to certify that he, she, or they have: (1) given reasonable notice to the client, prior to the expiration of the response period, that the practitioner(s) intends to withdraw from employment; (2) delivered to the client or a duly authorized representative of the client all papers and property (including funds) to which the client is entitled; and (3) notified the client of any responses that may be due and the time frame within which the client must respond, pursuant 37 CFR 10.40(c).

The request was signed by William Norvell, Jr., the sole attorney of record. William Norvell, Jr. has been withdrawn as attorney or agent of record.

All future correspondence will be directed to the inventor Louis Wardlaw at the address indicated below.

Telephone inquiries concerning this decision should be directed to Tredelle Jackson at 571-272-2783.

Tredelle D. Jackson
Paralegal Specialist
Office of Petitions

cc: **LOUIS J. WARDLAW**
C/O HOT-HED, INC.
5322 ADDICKS-SATSUMA ROAD
HOUSTON TX 77284

UNITED STATES PATENT AND TRADEMARK OFFICE

Commissioner for Patents
United States Patent and Trademark Office
P.O. Box 1450
Alexandria, VA 22313-1450
www.uspto.gov
DIW May-10

PFIZER INC
MARY J HOSLEY
150 EAST 42ND STREET
MS: 150/02/E112
NEW YORK NY 10017-5612

MAILED

MAY 26 2010

OFFICE OF PETITIONS

In re Application of	:	
Benson et al.	:	
Application Number: 11/803575	:	ON PETITION
Filing Date: 05/14/2007	:	
Attorney Docket Number: 26885B	:	
	:	

This is a decision in response to the petition under 37 CFR 1.137(b)[1] filed on March 5, 2010, to revive the above-identified application.

The petition is **GRANTED**.

This application became abandoned on July 13, 2009, for failure to timely file a response to the Office action requiring restriction and/or election mailed on June 12, 2009, which set a one (1)-month shortened statutory period for reply. Notice of Abandonment was mailed on February 8, 2010.

---

[1] Effective December 1, 1997, the provisions of 37 CFR 1.137(b) now provide that where the delay in reply was unintentional, a petition may be filed to revive an abandoned application or a lapsed patent pursuant to 37 CFR 1.137(b). A grantable petition filed under the provisions of 37 CFR 1.137(b) must be accompanied by:

(1) the required reply, unless previously filed. In a nonprovisional application abandoned for failure to prosecute, the required reply may be met by the filing of a continuing application. In a nonprovisional application filed on or after June 8, 1995, and abandoned for failure to prosecute, the required reply may also be met by the filing of a request for continued examination in compliance with § 1.114. In an application or patent, abandoned or lapsed for failure to pay the issue fee or any portion thereof, the required reply must be the payment of the issue fee or any outstanding balance thereof. In an application abandoned for failure to pay the publication fee, the required reply must include payment of the publication fee.

(2) the petition fee as set forth in 37 CFR 1.17(m);

(3) a statement that the entire delay in filing the required reply from the due date for the reply until the filing of a grantable petition pursuant to 37 CFR 1.137(b) was unintentional. The Director may required additional information where there is a question whether the delay was unintentional; and

(4) any terminal disclaimer (and fee as set forth in 37 CFR 1.20(d)) required pursuant to 37 CFR 1.137(c)).

Receipt of the response, filed on March 5, 2010, to the restriction requirement, is acknowledged.

The application will be referred to Technology Center Art Unit 1656 for further processing.

Telephone inquiries concerning this matter may be directed to the undersigned at (571) 272-3231.

D Wood

Douglas I. Wood
Senior Petitions Attorney
Office of Petitions

UNITED STATES PATENT AND TRADEMARK OFFICE

UNITED STATES DEPARTMENT OF COMMERCE
United States Patent and Trademark Office
Address: COMMISSIONER FOR PATENTS
P.O. Box 1450
Alexandria, Virginia 22313-1450
www.uspto.gov

BRINKS HOFER GILSON & LIONE
P.O. BOX 10395
CHICAGO, IL 60610

Mail Date: 04/21/2010

Applicant	: Kozo Fujii	: DECISION ON REQUEST FOR
Patent Number	: 7643143	: RECALCULATION of PATENT
Issue Date	: 01/05/2010	: TERM ADJUSTMENT IN VIEW
Appliction No	: 11/803,604	: OF WYETH AND NOTICE OF INTENT TO
Filed	: 05/15/2007	: ISSUE CERTIFICATE OF CORRECTION
		:

The Request for Recalculation is **GRANTED** to the extent indicated.

The patent term adjustment has been determined to be **352** days. The USPTO will *sua sponte* issue a certificate of correction reflecting the amount of PTA days determined by the recalculation.

Prior to the issuance of the certificate of correction, the USPTO will afford patentee an opportunity to be heard and request reconsideration. Accordingly, patentee has **one month or thirty (30) days**, whichever is longer, to file a request for reconsideration of this patent term adjustment calculation. See 35 U.S.C. 154(b)(3)(B)(ii) and 37 CFR 1.322(a)(4). No extensions of time will be granted under 37 CFR 1.136.

Patentee should use document code PET.OP if electronically filing a request for reconsideration of this patent term adjustment calculation. The patentee must also include the information required by 37 CFR 1.705(b)(2) and the fee required by 37 CFR 1.18(e). If patentee does not file a timely request for reconsideration of this patent term adjustment calculation including the information required by 37 CFR 1.705(b)(2) and the fee required by 37 CFR 1.18(e), the USPTO will issue a certificate of correction reflecting the PTA determination noted above.

Patentee should be aware that in order to preserve the right to review in the United States District Court for the District of Columbia of the USPTO patent term adjustment determination, patentee must ensure that he or she also take the steps required under 35 U.S.C. 154(b)(4)(A) in a timely manner. Nothing in the request for recalculation should be construed as providing an alternative time frame for commencing a civil action under 35 U.S.C. 154(b)(4)(A).

Any questions concerning this decision should be directed to the Office of Patent Legal Administration at 571-272-7702.

UNITED STATES PATENT AND TRADEMARK OFFICE

UNITED STATES DEPARTMENT OF COMMERCE
United States Patent and Trademark Office
Address: COMMISSIONER FOR PATENTS
P.O. Box 1450
Alexandria, Virginia 22313-1450
www.uspto.gov

Byrne Poh LLP
11 Broadway, Ste 865
New York, NY 10004

Mail Date: 04/27/2010

Applicant	: Adolf Brunner	: DECISION ON REQUEST FOR
Patent Number	: 7600437	: RECALCULATION of PATENT
Issue Date	: 10/13/2009	: TERM ADJUSTMENT IN VIEW
Application No	: 11/803,609	: OF WYETH AND NOTICE OF INTENT TO
Filed	: 05/15/2007	: ISSUE CERTIFICATE OF CORRECTION
		:

The Request for Recalculation is **GRANTED** to the extent indicated.

The patent term adjustment has been determined to be **0** days. The USPTO will *sua sponte* issue a certificate of correction reflecting the amount of PTA days determined by the recalculation.

Prior to the issuance of the certificate of correction, the USPTO will afford patentee an opportunity to be heard and request reconsideration. Accordingly, patentee has **one month or thirty (30) days**, whichever is longer, to file a request for reconsideration of this patent term adjustment calculation. See 35 U.S.C. 154(b)(3)(B)(ii) and 37 CFR 1.322(a)(4). No extensions of time will be granted under 37 CFR 1.136.

Patentee should use document code PET.OP if electronically filing a request for reconsideration of this patent term adjustment calculation. The patentee must also include the information required by 37 CFR 1.705(b)(2) and the fee required by 37 CFR 1.18(e). If patentee does not file a timely request for reconsideration of this patent term adjustment calculation including the information required by 37 CFR 1.705(b)(2) and the fee required by 37 CFR 1.18(e), the USPTO will issue a certificate of correction reflecting the PTA determination noted above.

Patentee should be aware that in order to preserve the right to review in the United States District Court for the District of Columbia of the USPTO patent term adjustment determination, patentee must ensure that he or she also take the steps required under 35 U.S.C. 154(b)(4)(A) in a timely manner. Nothing in the request for recalculation should be construed as providing an alternative time frame for commencing a civil action under 35 U.S.C. 154(b)(4)(A).

Any questions concerning this decision should be directed to the Office of Patent Legal Administration at 571-272-7702.

UNITED STATES PATENT AND TRADEMARK OFFICE

Commissioner for Patents
United States Patent and Trademark Office
P.O. Box 1450
Alexandria, VA 22313-1450
www.uspto.gov

Peter Loffler
P.O. Box 1001
Niceville, FL 32588-1001

COPY MAILED

OCT 0 9 2008

OFFICE OF PETITIONS

In re Application of	:	
William C. Hoffman, Jr.	:	
Application No. 11/803,633	:	DECISION ON PETITION
Filed: May 16, 2007	:	TO WITHDRAW
Attorney Docket No. 370523	:	FROM RECORD
	:	

This is a decision on the Request to Withdraw as attorney or agent under 37 C.F.R. § 1.36(b) or 37 C.F.R. § 10.40 filed September 19, 2008.

The request is **APPROVED**.

A grantable request to withdraw as attorney/agent of record must be signed by every attorney/agent seeking to withdraw or contain a clear indication that one attorney is signing on behalf of another/others. The Office requires the practitioner(s) requesting withdrawal to certify that he, she, or they have: (1) given reasonable notice to the client, prior to the expiration of the response period, that the practitioner(s) intends to withdraw from employment; (2) delivered to the client or a duly authorized representative of the client all papers and property (including funds) to which the client is entitled; and (3) notified the client of any responses that may be due and the time frame within which the client must respond, pursuant 37 CFR 10.40(c).

The request was signed by Peter Loffler, sole attorney of record. Peter Loffler has been withdrawn.

Applicant is reminded that there is no attorney of record at this time.

The correspondence address has been changed to that of the first signing inventor and is copied below.

Telephone inquiries concerning this decision should be directed to Kimberly Inabinet at 571-272-4618.

Kimberly Inabinet
Petitions Examiner
Office of Petitions

cc: Mr. William C. Hoffman, Jr.
5612 Mulberry Road
Lucedale, MS 39452

UNITED STATES PATENT AND TRADEMARK OFFICE

UNITED STATES DEPARTMENT OF COMMERCE
United States Patent and Trademark Office
Address: COMMISSIONER FOR PATENTS
P.O. Box 1450
Alexandria, Virginia 22313-1450
www.uspto.gov

APPLICATION NUMBER	FILING OR 371(C) DATE	FIRST NAMED APPLICANT	ATTY. DOCKET NO./TITLE
11/803,633	05/16/2007	William C. Hoffman JR.	370523

CONFIRMATION NO. 7022

POWER OF ATTORNEY NOTICE

Peter Loffler
P.O. Box 1001
Niceville, FL 32588-1001

OC000000032513125

Date Mailed: 10/09/2008

NOTICE REGARDING CHANGE OF POWER OF ATTORNEY

This is in response to the Power of Attorney filed 09/19/2008.

- The withdrawal as attorney in this application has been accepted. Future correspondence will be mailed to the new address of record. 37 CFR 1.33.

/kainabinet/

Office of Data Management, Application Assistance Unit (571) 272-4000, or (571) 272-4200, or 1-888-786-0101

SPE RESPONSE FOR CERTIFICATE OF CORRECTION

Paper No.: _____

DATE : 04/05/10

TO SPE OF : ART UNIT 2471

SUBJECT : Request for Certificate of Correction for Appl. No.: 11803637 Patent No.: 7680140

Please respond to this request for a certificate of correction within 7 days.

FOR IFW FILES:

Please review the requested changes/corrections as shown in the **COCIN** document(s) in the IFW application image. No new matter should be introduced, nor should the scope or meaning of the claims be changed.

Please complete the response (see below) and forward the completed response to scanning using document code **COCX**.

FOR PAPER FILES:

Please review the requested changes/corrections as shown in the attached certificate of correction. Please complete this form (see below) and forward it with the file to:

Certificates of Correction Branch (C of C)
Randolph Square 9D40-D
Palm Location 7580

You can fax the Directors/SPE response to 571-270-9990

Lamonte Newsome

Certificates of Correction Branch

703-756-1574

Thank You For Your Assistance

The request for issuing the above-identified correction(s) is hereby:

Note your decision on the appropriate box.

- ☐ **Approved** — **All** changes apply.
- ☒ **Approved in Part** — Specify below which changes **do not** apply.
- ☐ **Denied** — State the reasons for denial below.

Comments: Approved. But the "provisional application No. 60/244,713" should be "60/344,713".

SPE RESPONSE FOR CERTIFICATE OF CORRECTION

/Chi H. Pham/	2471
SPE	**Art Unit**

PATENT APPLICATION
IN THE UNITED STATES PATENT AND TRADEMARK OFFICE

Application Serial No: 11/803,637	**Attorney Docket No**: BP2491C
Application Filing Date: 05-15-2007	**Inventor(s)**: Barton J. Sano, et al.
Examiner: Chou, Albert T.	
Art Group: 2471	**Patent No**: 7,680,140
Confirmation No: 6921	**Patent Issue Date**: 03-16-2010
Title: Systems including packet interfaces, switches, and packet DMA circuits for splitting and merging packet streams	

Date: 03-22-2010

ATTN: Certificate of Correction Branch
Commissioner for Patents
P.O. Box 1450
Alexandria, VA 22313-1450

REQUEST FOR CERTIFICATE OF CORRECTION

After reviewing the issued U.S. patent referenced above, the Applicant notices one or more error(s) that was/were apparently made through the fault of the United States Patent and Trademark Office (USPTO).

The Applicant respectfully requests that the Director issue a Certificate of Correction, without charge to the Applicant, to be recorded in the records of U.S. patents.

The Applicant respectfully believes that no fees are due in accordance with 35 U.S.C. § 254.

These corrections of the mistake(s) made by the USPTO are also depicted on the enclosed Certificate of Correction - Form PTO/SB/44 (09-07) (1 pg).

Errors made through fault of the USPTO.

Title Page, Item (60): after "provisional application No. 60/244,713, filed on Dec. 24, 2001" insert --provisional application No. 60/348,777, filed on Jan. 14, 2002, provisional application No. 60/348,717, filed on Jan. 14, 2002.--

The Office is invited to contact the undersigned by telephone or facsimile with any questions or concerns whatsoever.

RESPECTFULLY SUBMITTED,

By: /SXShort/ Reg. No. 45,105

Shayne X. Short, Ph.D., Reg. No. 45,105
Direct Phone: (512) 825-1145
Direct Fax No. (888) 800-6752

GARLICK HARRISON & MARKISON
ATTORNEYS AT LAW
P.O. BOX 160727
AUSTIN, TEXAS 78716-0727
TELEPHONE (512) 825-1145 / FACSIMILE (888) 800-6752 or (888) 456-7824

PTO/SB/44 (09-07)
Approved for use through 08/31/2010. OMB 0651-0033
U.S. Patent and Trademark Office; U.S. DEPARTMENT OF COMMERCE
Under the Paperwork Reduction Act of 1995, no persons are required to respond to a collection of information unless it displays a valid OMB control number.
(Also Form PTO-1050)

UNITED STATES PATENT AND TRADEMARK OFFICE
CERTIFICATE OF CORRECTION

PATENT NO. : 7,680,140

APPLICATION NO.: 11/803,637

ISSUE DATE : 03-16-2010

INVENTOR(S) : Barton J. Sano, et al.

It is certified that an error appears or errors appear in the above-identified patent and that said Letters Patent is hereby corrected as shown below:

Title Page, Item (60): after “provisional application No. 60/244,713, filed on Dec. 24, 2001” insert --provisional application No. 60/348,777, filed on Jan. 14, 2002, provisional application No. 60/348,717, filed on Jan. 14, 2002.

Comments: Approved. But the "provisional application No. 60/244,713 ..." should be "60/344,713".

MAILING ADDRESS OF SENDER (Please do not use customer number below):

Garlick Harrison & Markison
P.O. Box 160727
Austin, TX 78716-0727

This collection of information is required by 37 CFR 1.322, 1.323, and 1.324. The information is required to obtain or retain a benefit by the public which is to file (and by the USPTO to process) an application. Confidentiality is governed by 35 U.S.C. 122 and 37 CFR 1.14. This collection is estimated to take 1.0 hour to complete, including gathering, preparing, and submitting the completed application form to the USPTO. Time will vary depending upon the individual case. Any comments on the amount of time you require to complete this form and/or suggestions for reducing this burden, should be sent to the Chief Information Officer, U.S. Patent and Trademark Office, U.S. Department of Commerce, P.O. Box 1450, Alexandria, VA 22313-1450. DO NOT SEND FEES OR COMPLETED FORMS TO THIS ADDRESS. **SEND TO: Attention Certificate of Corrections Branch, Commissioner for Patents, P.O. Box 1450, Alexandria, VA 22313-1450.**

If you need assistance in completing the form, call 1-800-PTO-9199 and select option 2.

SPE RESPONSE FOR CERTIFICATE OF CORRECTION

Paper No.: _____

DATE : 04/05/10

TO SPE OF : ART UNIT 2471

SUBJECT : Request for Certificate of Correction for Appl. No.: 11803637 Patent No.: 7680140

Please respond to this request for a certificate of correction within 7 days.

FOR IFW FILES:

Please review the requested changes/corrections as shown in the **COCIN** document(s) in the IFW application image. No new matter should be introduced, nor should the scope or meaning of the claims be changed.

Please complete the response (see below) and forward the completed response to scanning using document code **COCX**.

FOR PAPER FILES:

Please review the requested changes/corrections as shown in the attached certificate of correction. Please complete this form (see below) and forward it with the file to:

Certificates of Correction Branch (C of C)
Randolph Square 9D40-D
Palm Location 7580
You can fax the Directors/SPE response to 571-270-9990

Lamonte

Newsome

Certificates of Correction Branch
703-756-1574

Thank You For Your Assistance

The request for issuing the above-identified correction(s) is hereby:
Note your decision on the appropriate box.

- ☐ **Approved** — **All** changes apply.
- ☒ **Approved in Part** — Specify below which changes **do not** apply.
- ☐ **Denied** — State the reasons for denial below.

Comments: Approved. But the "provisional application No. 60/244,713" should be "60/344,713".

UNITED STATES PATENT AND TRADEMARK OFFICE

UNITED STATES DEPARTMENT OF COMMERCE
United States Patent and Trademark Office
Address: COMMISSIONER FOR PATENTS
P.O. Box 1450
Alexandria, Virginia 22313-1450
www.uspto.gov

MINTZ, LEVIN, COHN, FERRIS, GLOVSKY & POPEO, P.C.
ONE FINANCIAL CENTER
BOSTON, MA 02111

Mail Date: 04/21/2010

Applicant	: Christian Rabetge	: DECISION ON REQUEST FOR
Patent Number	: 7587386	: RECALCULATION of PATENT
Issue Date	: 09/08/2009	: TERM ADJUSTMENT IN VIEW
Appliction No	: 11/803,642	: OF WYETH AND NOTICE OF INTENT TO
Filed	: 05/14/2007	: ISSUE CERTIFICATE OF CORRECTION
		:

The Request for Recalculation is **GRANTED** to the extent indicated.

The patent term adjustment has been determined to be **324** days. The USPTO will *sua sponte* issue a certificate of correction reflecting the amount of PTA days determined by the recalculation.

Prior to the issuance of the certificate of correction, the USPTO will afford patentee an opportunity to be heard and request reconsideration. Accordingly, patentee has **one month or thirty (30) days**, whichever is longer, to file a request for reconsideration of this patent term adjustment calculation. See 35 U.S.C. 154(b)(3)(B)(ii) and 37 CFR 1.322(a)(4). No extensions of time will be granted under 37 CFR 1.136.

Patentee should use document code PET.OP if electronically filing a request for reconsideration of this patent term adjustment calculation. The patentee must also include the information required by 37 CFR 1.705(b)(2) and the fee required by 37 CFR 1.18(e). If patentee does not file a timely request for reconsideration of this patent term adjustment calculation including the information required by 37 CFR 1.705(b)(2) and the fee required by 37 CFR 1.18(e), the USPTO will issue a certificate of correction reflecting the PTA determination noted above.

Patentee should be aware that in order to preserve the right to review in the United States District Court for the District of Columbia of the USPTO patent term adjustment determination, patentee must ensure that he or she also take the steps required under 35 U.S.C. 154(b)(4)(A) in a timely manner. Nothing in the request for recalculation should be construed as providing an alternative time frame for commencing a civil action under 35 U.S.C. 154(b)(4)(A).

Any questions concerning this decision should be directed to the Office of Patent Legal Administration at 571-272-7702.

UNITED STATES PATENT AND TRADEMARK OFFICE

Commissioner for Patents
United States Patent and Trademark Office
P.O. Box 1450
Alexandria, VA 22313-1450
www.uspto.gov

TOWNSEND AND TOWNSEND AND CREW LLP
TWO EMBARCADERO CENTER, EIGHTH FLOOR
SAN FRANCISCO CA 94111-3834

COPY MAILED

SEP 2 6 2008

OFFICE OF PETITIONS

In re Application of	:
Hinton et al.	:
Application No. 11/803694	: DECISION ON PETITION
Filing or 371(c) Date: 05/14/2007	: UNDER 37 CFR 1.78(a)(3) AND (a)(6)
Attorney Docket No. 011823-012711US	:

This is a decision on the petition under 37 CFR §§ 1.78(a)(3) and 1.78(a)(6), filed July 16, 2008, to accept an unintentionally delayed claim under 35 U.S.C. §§120 and 119(e) for the benefit of priority to the prior-filed applications set forth in the concurrently filed Application Data Sheet.

The petitions are **GRANTED.**

A petition for acceptance of a claim for late priority under 37 CFR §§ 1.78(a)(3) and 1.78(a)(6) is only applicable to those applications filed on or after November 29, 2000. Further, the petition is appropriate only after the expiration of the period specified in 37 CFR §§ 1.78(a)(2)(ii) and 1.78(a)(5)(ii). In addition, the petition under 37 CFR §§ 1.78(a)(3) and 1.78(a)(6) must be accompanied by:

(1) the reference required by 35 U.S.C. §§ 120 and 119(e) and 37 CFR §§ 1.78(a)(2)(i) and 1.78(a)(5)(i) of the prior-filed application, unless previously submitted;
(2) the surcharge set forth in § 1.17(t); and
(3) a statement that the entire delay between the date the claim was due under 37 CFR §§ 1.78(a)(2)(ii) and 1.78(a)(5)(ii) and the date the claim was filed was unintentional. The Director may require additional where there is a question whether the delay was unintentional.

All of the above requirements having been satisfied, the late claim for benefit of priority to the prior-filed applications under 35 U.S.C. §§ 120 and 119(e) is accepted as being unintentionally delayed.

The granting of the petition to accept the delayed benefit claim to the prior-filed applications under 37 CFR §§ 1.78(a)(3) and 1.78(a)(6) should not be construed as meaning that this

application is entitled to the benefit of the filing date of the prior-filed applications. In order for this application to be entitled to the benefit of the prior-filed applications, all other requirements under 35 U.S.C. §§120 and 1.78(a)(1) and (a)(2) and under 35 U.S.C. §119(e) and 37 CFR 1.78(a)(4) and (a)(5) must be met. Similarly, the fact that the corrected Filing Receipt accompanying this decision on petition includes the prior-filed applications should not be construed as meaning that applicant is entitled to the claim for benefit of priority to the prior-filed applications noted thereon. Accordingly, the examiner will, in due course, consider this benefit claim and determine whether the application is entitled to the benefit of the earlier filing date.

A corrected Filing Receipt, which includes the priority claim to the prior-filed applications, accompanies this decision on petition.

Any questions concerning this matter may be directed to Derek Woods at (571) 272-3232. All other inquiries concerning either the examination procedures or status of the application should be directed to the Technology Center.

This application is being referred to Technology Center Art Unit 1644 for consideration by the examiner of the claim for benefit of priority under 35 U.S.C. § §120 and 119(e) to the prior-filed applications.

Anthony Knight
Supervisor
Office of Petitions

ATTACHMENT: Corrected Filing Receipt

UNITED STATES PATENT AND TRADEMARK OFFICE

UNITED STATES DEPARTMENT OF COMMERCE
United States Patent and Trademark Office
Address: COMMISSIONER FOR PATENTS
P.O. Box 1450
Alexandria, Virginia 22313-1450
www.uspto.gov

APPLICATION NUMBER	FILING or 371(c) DATE	GRP ART UNIT	FIL FEE REC'D	ATTY.DOCKET.NO	TOT CLAIMS	IND CLAIMS
11/803,694	05/14/2007	1644	1680	011823-012711US	16	2

CONFIRMATION NO. 6758

CORRECTED FILING RECEIPT

45308
TOWNSEND AND TOWNSEND AND CREW LLP
TWO EMBARCADERO CENTER, EIGHTH FLOOR
SAN FRANCISCO, CA 94111-3834

OC000000032137331

Date Mailed: 09/17/2008

Receipt is acknowledged of this non-provisional patent application. The application will be taken up for examination in due course. Applicant will be notified as to the results of the examination. Any correspondence concerning the application must include the following identification information: the U.S. APPLICATION NUMBER, FILING DATE, NAME OF APPLICANT, and TITLE OF INVENTION. Fees transmitted by check or draft are subject to collection. Please verify the accuracy of the data presented on this receipt. **If an error is noted on this Filing Receipt, please submit a written request for a Filing Receipt Correction. Please provide a copy of this Filing Receipt with the changes noted thereon. If you received a "Notice to File Missing Parts" for this application, please submit any corrections to this Filing Receipt with your reply to the Notice. When the USPTO processes the reply to the Notice, the USPTO will generate another Filing Receipt incorporating the requested corrections**

Applicant(s)

Paul R. Hinton, Sunnyvale, CA;
Naoya Tsurushita, Palo Alto, CA;

Assignment For Published Patent Application

PDL BioPharma, Inc., Redwood City, CA

Power of Attorney: None

Domestic Priority data as claimed by applicant

This application is a CON of 10/966,673 10/15/2004 PAT 7,217,798
which claims benefit of 60/511,687 10/15/2003
and claims benefit of 60/562,627 04/14/2004
This application 11/803,694
is a CIP of 11/102,621 04/08/2005 PAT 7,365,168
which is a CIP of 10/822,300 04/09/2004 PAT 7,361,740
which is a CIP of 10/687,118 10/15/2003 PAT 7,217,797
which claims benefit of 60/418,972 10/15/2002
and claims benefit of 60/462,014 04/10/2003
and claims benefit of 60/475,762 06/03/2003
and claims benefit of 60/499,048 08/29/2003

Foreign Applications

If Required, Foreign Filing License Granted: 03/27/2008

The country code and number of your priority application, to be used for filing abroad under the Paris Convention, is **US 11/803,694**

Projected Publication Date: 11/20/2008

Non-Publication Request: No

Early Publication Request: No
Title

Alteration of Fc-fusion protein serum half-lives by mutagenesis

Preliminary Class

424

PROTECTING YOUR INVENTION OUTSIDE THE UNITED STATES

Since the rights granted by a U.S. patent extend only throughout the territory of the United States and have no effect in a foreign country, an inventor who wishes patent protection in another country must apply for a patent in a specific country or in regional patent offices. Applicants may wish to consider the filing of an international application under the Patent Cooperation Treaty (PCT). An international (PCT) application generally has the same effect as a regular national patent application in each PCT-member country. The PCT process **simplifies** the filing of patent applications on the same invention in member countries, but **does not result** in a grant of "an international patent" and does not eliminate the need of applicants to file additional documents and fees in countries where patent protection is desired.

Almost every country has its own patent law, and a person desiring a patent in a particular country must make an application for patent in that country in accordance with its particular laws. Since the laws of many countries differ in various respects from the patent law of the United States, applicants are advised to seek guidance from specific foreign countries to ensure that patent rights are not lost prematurely.

Applicants also are advised that in the case of inventions made in the United States, the Director of the USPTO must issue a license before applicants can apply for a patent in a foreign country. The filing of a U.S. patent application serves as a request for a foreign filing license. The application's filing receipt contains further information and guidance as to the status of applicant's license for foreign filing.

Applicants may wish to consult the USPTO booklet, "General Information Concerning Patents" (specifically, the section entitled "Treaties and Foreign Patents") for more information on timeframes and deadlines for filing foreign patent applications. The guide is available either by contacting the USPTO Contact Center at 800-786-9199, or it can be viewed on the USPTO website at http://www.uspto.gov/web/offices/pac/doc/general/index.html.

For information on preventing theft of your intellectual property (patents, trademarks and copyrights), you may wish to consult the U.S. Government website, http://www.stopfakes.gov. Part of a Department of Commerce initiative, this website includes self-help "toolkits" giving innovators guidance on how to protect intellectual property in specific countries such as China, Korea and Mexico. For questions regarding patent enforcement issues, applicants may call the U.S. Government hotline at 1-866-999-HALT (1-866-999-4158).

LICENSE FOR FOREIGN FILING UNDER

Title 35, United States Code, Section 184

Title 37, Code of Federal Regulations, 5.11 & 5.15

GRANTED

The applicant has been granted a license under 35 U.S.C. 184, if the phrase "IF REQUIRED, FOREIGN FILING LICENSE GRANTED" followed by a date appears on this form. Such licenses are issued in all applications where the conditions for issuance of a license have been met, regardless of whether or not a license may be required as set forth in 37 CFR 5.15. The scope and limitations of this license are set forth in 37 CFR 5.15(a) unless an earlier license has been issued under 37 CFR 5.15(b). The license is subject to revocation upon written notification. The date indicated is the effective date of the license, unless an earlier license of similar scope has been granted under 37 CFR 5.13 or 5.14.

This license is to be retained by the licensee and may be used at any time on or after the effective date thereof unless it is revoked. This license is automatically transferred to any related applications(s) filed under 37 CFR 1.53(d). This license is not retroactive.

The grant of a license does not in any way lessen the responsibility of a licensee for the security of the subject matter as imposed by any Government contract or the provisions of existing laws relating to espionage and the national security or the export of technical data. Licensees should apprise themselves of current regulations especially with respect to certain countries, of other agencies, particularly the Office of Defense Trade Controls, Department of State (with respect to Arms, Munitions and Implements of War (22 CFR 121-128)); the Bureau of Industry and Security, Department of Commerce (15 CFR parts 730-774); the Office of Foreign AssetsControl, Department of Treasury (31 CFR Parts 500+) and the Department of Energy.

NOT GRANTED

No license under 35 U.S.C. 184 has been granted at this time, if the phrase "IF REQUIRED, FOREIGN FILING LICENSE GRANTED" DOES NOT appear on this form. Applicant may still petition for a license under 37 CFR 5.12, if a license is desired before the expiration of 6 months from the filing date of the application. If 6 months has lapsed from the filing date of this application and the licensee has not received any indication of a secrecy order under 35 U.S.C. 181, the licensee may foreign file the application pursuant to 37 CFR 5.15(b).

UNITED STATES PATENT AND TRADEMARK OFFICE

Commissioner for Patents
United States Patent and Trademark Office
P.O. Box 1450
Alexandria, VA 22313-1450
www.uspto.gov

WOOD, HERRON & EVANS, LLP
2700 CAREW TOWER
441 VINE STREET
CINCINNATI OH 45202

MAILED

FEB 17 2009

OFFICE OF PETITIONS

In re Application of	:	
Wu et al.	:	
Application No. 11/803,715	:	DECISION ON PETITION
Filed: May 15, 2007	:	
Attorney Docket No. VALVO-11US	:	

This is a decision on the petition under the unintentional provisions of 37 CFR 1.137(b), filed April 14, 2008, to revive the above-identified application.

The petition is **GRANTED**.

The application became abandoned for failure to reply in a timely manner to the Notice to File Missing Parts of Nonprovisional Application (Notice), mailed June 12, 2007. The Notice set a period for reply of two (2) months from the mail date of the Notice. No extensions of time under the provisions of 37 CFR 1.136(a) were obtained. Accordingly, the application became abandoned on August 13, 2007. A Notice of Abandonment was mailed February 27, 2008.

The petition satisfies the requirements of 37 CFR 1.137(b) in that petitioner has supplied (1) the reply in the form of an Oath/Declaration and $130.00 surcharge fee, the Statutory basic filing fee of $310.00, the Search fee of $510.00, the Examination fee of $210.00, and Replacement drawings, (2) the petition fee of $1,540.00, and (3) a proper statement of unintentional delay.

Telephone inquiries concerning this decision should be directed to Joan Olszewski at (571) 272-7751.

The Power of Attorney was revoked from the petitioner in June of 2008. Therefore, a courtesy copy of this decision is being mailed to the address given on the petition; however, the Office will mail all future correspondence solely to the address of record.

This application is being referred to the Office of Patent Application Processing for further processing in accordance with this decision on petition.

/Liana Walsh/
Liana Walsh
Petitioner Examiner
Office of Petitions

cc: David W. Carrithers
6200 Dutchmans Lane, Ste 206
Louisville, KY 40205

UNITED STATES PATENT AND TRADEMARK OFFICE

Commissioner for Patents
United States Patent and Trademark Office
P.O. Box 1450
Alexandria, VA 22313-1450
www.uspto.gov

DOCKET CLERK
P.O. DRAWER 800889
DALLAS TX 75380

COPY MAILED

SEP 10 2007

OFFICE OF PETITIONS

In re Application of	:	
Chawla	:	
Filed: May 15, 2007	:	ON PETITION
Application No. 11/803,725	:	
Atty. Dkt. No.: 06-IND-058	:	

This decision is in response to the petition, filed August 14, 2007, to accord the above-identified application a filing date of May 15, 2007 with pages 1 and 2 of the specification as part of the original application as filed.

The application was filed May 15, 2007. The Notice mailed June 12, 2007 indicated, *inter alia*, that the application had been accorded a filing date but that pages 1 and 2 of the specification appeared to have been omitted from the application as filed.

In response, petitioner argues that the application as deposited included pages 1 and 2 of the specification and have presented as proof of mailing and proof of receipt of pages 1 and 2 of the specification a return postcard date stamped by the Office on May 15, 2007. A copy of items purportedly filed with the application was submitted herewith.

The originals of pages 1 and 2 have not been located. However, in view of the evidence presented, the petition to accord the application a filing date of May 15, 2007 is GRANTED.

Since the original of pages 1 and 2 of the specification cannot be located in the Office, the copy submitted herewith will be used for examination purposes.

No petition fee is due in connection with this matter.

This application will be returned to the Office of Initial Patent Examination for further processing with a filing date of May 15, 2007.

Telephone inquiries related to this decision may be directed to the undersigned at (571) 272-3205.

Alesia M. Brown
Petitions Attorney
Office of Petitions

UNITED STATES PATENT AND TRADEMARK OFFICE

Commissioner for Patents
United States Patent and Trademark Office
P.O. Box 1450
Alexandria, VA 22313-1450
www.uspto.gov

KAPLAN WARD & PATEL LLC
CUMBERLAND CENTER II
3100 CUMBERLAND BLVD, SUITE 1400
ATLANTA GA 30339

COPY MAILED

APR 13 2009

OFFICE OF PETITIONS

In re Application of	:	
MOTSINGER, Krystina	:	
Application No. 11/803,749	:	DECISION ON PETITION
Filed: May 15, 2007	:	TO WITHDRAW
Attorney Docket No. **33340-RA**	:	FROM RECORD
	:	

This is a decision on the Request to Withdraw as attorney or agent of record under 37 C.F.R. § 1.36(b), filed February 20, 2009.

The request is **APPROVED**.

A grantable request to withdraw as attorney/agent of record must be signed by every attorney/agent seeking to withdraw or contain a clear indication that one attorney is signing on behalf of another/others. The Office requires the practitioner(s) requesting withdrawal to certify that he, she, or they have: (1) given reasonable notice to the client, prior to the expiration of the response period, that the practitioner(s) intends to withdraw from employment; (2) delivered to the client or a duly authorized representative of the client all papers and property (including funds) to which the client is entitled; and (3) notified the client of any responses that may be due and the time frame within which the client must respond, pursuant 37 CFR 10.40(c).

The request was signed by Ashish D. Patel on behalf of all attorneys of record who are associated with customer No. 30184. All attorneys/agents associated have been withdrawn. Applicant is reminded that there is no attorney of record at this time.

All future correspondence will be directed to the first named inventor Krystina Motsinger at the address indicated below.

There are no outstanding office actions at this time.

Telephone inquiries concerning this decision should be directed to Michelle R. Eason at 571-272-4231.

Michelle R. Eason
Paralegal Specialist
Office of Petitions

cc: **KRYSTINA MOTSINGER**
23 MELTON ROAD
WINTERVILLE, GA 30683

UNITED STATES PATENT AND TRADEMARK OFFICE

Commissioner for Patents
United States Patent and Trademark Office
P.O. Box 1450
Alexandria, VA 22313-1450
www.uspto.gov

BRINKS HOFER GILSON & LIONE/SanDisk
P.O. BOX 10395
CHICAGO, IL 60610

COPY MAILED

AUG 20 2007

OFFICE OF PETITIONS

In re Application of :
Bosch, et al. :
Application No. 11/803,776 :
Filed: May 15, 2007 :
Attorney Docket No. 10519/186 :

DECISION GRANTING PETITION

This is a decision on the petition filed July 5, 2007, under 37 CFR 1.10(c) requesting that the above-cited application be accorded a filing date of May 15, 2007, rather than the presently accorded filing date of May 16, 2007.

Petitioner alleges that the application was deposited with the Express Mail Service on May 15, 2007. In support of the allegation, the petition is accompanied by a copy of the Express Mail tracking sheet with a tracking number EV924817884US showing a "date-in" of May 15, 2007. The tracking number cited is the same number found on the application transmittal sheet that accompanied the original application papers. The evidence is convincing that the application papers were deposited on May 15, 2007.

In view of the above, the petition is granted. The new filing date for the above-cited application is May 15, 2007.

The Office of Initial Patent Examination will further process the application with a filing date of May 15, 2007, and issue a corrected filing receipt.

Any inquiries related to this decision should be directed to the undersigned at (571)272-3222.

Kenya A. McLaughlin
Petitions Attorney
Office of Petitions

UNITED STATES PATENT AND TRADEMARK OFFICE

Commissioner for Patents
United States Patent and Trademark Office
P.O. Box 1450
Alexandria, VA 22313-1450
www.uspto.gov

AMSTER, ROTHSTEIN & EBENSTEIN, LLP
90 PARK AVENUE
NEW YORK, NY 10016

COPY MAILED

NOV 07 2007

OFFICE OF PETITIONS

In re Application of

Philip R. McKee et al.
Application No. 11/803,787
Filed: May 15, 2007
Attorney Docket No. 68925/15

DECISION ON PETITION
TO MAKE SPECIAL UNDER
37 CFR 1.102(c)(1)

This is a decision on the petition under 37 CFR 1.102(c)(1), filed May 15, 2007, to make the above-identified application special based on applicant's age as set forth in M.P.E.P. § 708.02, Section IV.

The petition is **GRANTED**.

A grantable petition to make an application special under 37 CFR 1.102(c)(1) and MPEP § 708.02, Section IV: Applicant's Age must be accompanied by evidence showing that at least one of the applicants is 65 years of age, or more, such as a birth certificate or a statement by applicant. No fee is required

The instant petition includes a statement by the applicant. Accordingly, the above-identified application has been accorded "special" status.

Telephone inquiries concerning this decision should be directed to the undersigned at 571-272-4618.

The application is being forwarded to the Technology Center Art Unit 3742 for action on the merits commensurate with this decision.

All other inquiries concerning either the examination or status of the application should be directed to the Technology Center.

Kimberly Inabinet
Kimberly Inabinet
Petitions Examiner
Office of Petitions

UNITED STATES PATENT AND TRADEMARK OFFICE

COMMISSIONER FOR PATENTS
UNITED STATES PATENT AND TRADEMARK OFFICE
P.O. BOX 1450
ALEXANDRIA, VA 22313-1450
www.uspto.gov

FITCH EVEN TABIN & FLANNERY
120 South LaSalle Street
Suite 1600
Chicago, IL 60603-3406

In re Application of: Vaganov et al Serial No.: 11/803788 Filed: May 15, 2007	PETITION FOR CORRECTION OF INVENTORSHIP UNDER 37 CFR § 1.48(a)

This is a decision on the petition filed 12 August 2008 to correct inventorship under 37 CFR 1.48 (a).

The petition is GRANTED.

In view of the papers filed 17 February 2010 it has been found that this nonprovisional application, as filed, through error and without deceptive intent, improperly set forth the inventorship, and accordingly, this application has been corrected in compliance with 37 CFR 1.48 (a). The inventorship of this application has been changed by adding:

Nickolai Belov

The application will be forwarded to the Office of Initial Patent Examination (OIPE) for issuance of a corrected filing receipt, and correction of Office records to reflect the inventorship as corrected.

K Bryant

Kiesha R. Bryant
Supervisory Patent Examiner,
Art Unit 2891

UNITED STATES PATENT AND TRADEMARK OFFICE

UNITED STATES DEPARTMENT OF COMMERCE
United States Patent and Trademark Office
Address: COMMISSIONER FOR PATENTS
P.O. Box 1450
Alexandria, Virginia 22313-1450
www.uspto.gov

APPLICATION NO.	FILING DATE	FIRST NAMED INVENTOR	ATTORNEY DOCKET NO.	CONFIRMATION NO.
11/803,788	05/15/2007	Vladimir Vaganov	86921 8700	7490

22242 7590 06/23/2010
FITCH EVEN TABIN & FLANNERY
120 SOUTH LASALLE STREET
SUITE 1600
CHICAGO, IL 60603-3406

EXAMINER
TORNOW, MARK W

ART UNIT	PAPER NUMBER
2891	

MAIL DATE	DELIVERY MODE
06/23/2010	PAPER

Please find below and/or attached an Office communication concerning this application or proceeding.

The time period for reply, if any, is set in the attached communication.

UNITED STATES PATENT AND TRADEMARK OFFICE

Commissioner for Patents
United States Patent and Trademark Office
P.O. Box 1450
Alexandria, VA 22313-1450
www.uspto.gov

CHRISTOPHER JOHN RUDY
209 HURON AVENUE, SUITE 8
PORT HURON, MI 48060

COPY MAILED

AUG 21 2009

OFFICE OF PETITIONS

In re Application of	:	
Samuel L. Chapman et al	:	
Application No. 11/803,799	:	DECISION ON PETITION
Filed: May 16, 2007	:	TO WITHDRAW
Attorney Docket No. X-RAY-737	:	FROM RECORD
	:	

This is a decision on the Request to Withdraw as attorney or agent of record under 37 C.F.R. § 1.36(b), filed June 9, 2009.

The request is **APPROVED**.

The request was signed by Christopher John Rudy on behalf of the practitioners of record associated with Customer No. 41324.

Applicant is reminded that there is no attorney of record at this time.

All future correspondence will be directed to inventor Samuel L. Chapman at the address indicated below.

Telephone inquiries concerning this decision should be directed to Irvin Dingle at (571) 272-3210.

Irvin Dingle
Petitions Examiner
Office of Petitions

cc: Samuel L. Chapman
1515 W. Rick CT.
Port Huron, MI 48060

UNITED STATES PATENT AND TRADEMARK OFFICE

Commissioner for Patents
United States Patent and Trademark Office
P.O. Box 1450
Alexandria, VA 22313-1450
www.uspto.gov

DILWORTH & BARRESE, LLP
333 EARLE OVINGTON BLVD.
SUITE 702
UNIONDALE NY 11553

COPY MAILED

SEP 0 9 2008

OFFICE OF PETITIONS

In re Application of :
Schmulling, et al. :
Application No. 11/803,820 : ON PETITION
Filed: May 16, 2007 :
Attorney Docket No. 1187-21 DIV :
For: METHODS FOR MODIFYING PLANT MORPHOLOGY, BIOCHEMISTRY AND PHYSIOLOGY

This is a decision addressing the correspondence, filed July 2, 2008 (certificate of mailing date June 30, 2008), requesting, in effect, withdrawal of the Notice to File Corrected Application Papers (Notice), mailed April 28, 2008, insofar as it alleges that page 71 of the specification was omitted when the application was filed. The correspondence will be treated under 37 CFR 1.53(e).

The petition under 37 CFR 1.53(e) is **GRANTED**.

The application was filed on May 16, 2007. On April 28, 2008, the Office of Initial Patent Examination mailed a Notice informing applicants that page 71 of the specification appeared to have been omitted and requiring replacement drawings.

In response to the Notice, petitioners timely filed replacement drawings and the present petition. Petitioners request that page 71 be accorded a filing date of May 16, 2007on the basis that the entire specification, including allegedly missing page 71, was received in the Patent and Trademark Office (PTO) on May 16, 2007.

In support, the petition is accompanied by a copy of applicants' itemized postcard receipt showing an Office of Initial Patent Examination generated barcode citing May 16, 2007 as the date of receipt. The postcard lists that the filing included, *inter alia*, 105 sheets of specification, claims and abstract. A review of the application file reveals that 104 sheets of specification, claims and abstract are present. Page 71 of the specification is missing.

The return postcard constitutes *prima facie* evidence that 105 sheets of specification, claims and abstract, including missing page 71, were filed on May 16, 2007. MPEP 503. Accordingly, the request is granted. No petition fee has been or will be charged in connection with this matter.

The application is being returned to Office of Patent Application Processing for further pre-examination processing, with a filing date of **May 16, 2007,** using the copy of page 71 supplied with the petition.

Any inquiries pertaining to this matter may be directed to the undersigned at (571) 272-3230.

Shirene Willis Brantley

Shirene Willis Brantley
Senior Petitions Attorney
Office of Petitions

UNITED STATES PATENT AND TRADEMARK OFFICE

Commissioner for Patents
United States Patent and Trademark Office
P.O. Box 1450
Alexandria, VA 22313-1450
www.uspto.gov

SALTER & MICHAELSON
THE HERITAGE BUILDING
321 SOUTH MAIN STREET
PROVIDENCE RI 02903-7128

COPY MAILED

FEB 19 2008

OFFICE OF PETITIONS

In re Application of Christopher Hall and Najem Yaqub Application No.11/803,849 Filed: May 16, 2007 Attorney Docket Number: 01056-5 Title: Cleaning Composition	DECISION REFUSING STATUS UNDER 37 C.F.R. §1.47(b)

This is in response to the petition under 37 C.F.R. §1.47(b), filed December 17, 2007.

Rule 47 applicant is given **TWO MONTHS** from the mailing date of this decision to reply, correcting the below-noted deficiencies. Any reply should be entitled "Request for Reconsideration of Petition Under 37 C.F.R. §1.47(b)," and should only address the deficiencies noted below, except that the reply may include an oath or declaration executed by the non-signing inventor. **Failure to respond will result in abandonment of the application**. Any extensions of time will be governed by 37 C.F.R. §1.136(a).

The above-identified application was filed on May 16, 2007, without an executed oath or declaration, and naming Hall and Yaqub as joint inventors. Accordingly, on June 15, 2007, a Notice to File Missing Parts of Application - Filing Date Granted was mailed, requiring applicant to submit an executed oath or declaration and pay a surcharge for late filing. The Notice set an extendable two month period for reply.

In reply, applicant filed the instant petition, the surcharge for late filing of the declaration and a declaration. To make timely a four month extension of time was submitted.

A grantable petition under 37 C.F.R. §1.47(b) requires: (1) proof that the non-signing inventor cannot be reached or refuses to sign the oath or declaration; (2) an acceptable oath or declaration; (3) the petition fee; (4) a statement of last known address of the non-signing inventor; (5) proof of proprietary interest; and (6) a showing that such action is necessary to preserve the rights of parties or to prevent irreparable damage. Rule 47 applicant has failed to establish (2), (5), and (6). Pursuant to petitioner's request, deposit account 19-0120 will be charged the $200.00 petition fee.

An Acceptable Oath or Declaration

As to item (2), the signed declaration presented is illegible. The submission of the unsigned declaration cannot overcome the Office's inability to read the signed

declaration. The Office is unable to ascertain whether the requirements of 37 CFR 1.63. Further, where an application is executed by one other than the inventor, the declaration required by 37 CFR 1.63 must state the full name, residence, post office address, and citizenship of the nonsigning inventor. Also, the title or position of the person signing must be stated if signing on behalf of a corporation under 37 CFR 1.47(b).

Proof of Proprietary Interest

As to item (5), if the invention has not been assigned, or if there is no written agreement to assign, the 37 CFR 1.47(b) applicant must demonstrate that he or she otherwise has a sufficient proprietary interest in the matter.

A proprietary interest obtained other than by assignment or agreement to assign may be demonstrated by an appropriate legal memorandum to the effect that a court of competent jurisdiction (federal, state, or foreign) would by the weight of authority in that jurisdiction award title of the invention to the 37 CFR 1.47(b) applicant. The facts in support of any conclusion that a court would award title to the 37 CFR 1.47(b) applicant should be made of record by way of an affidavit or declaration of the person having firsthand knowledge of same. The legal memorandum should be prepared and signed by an attorney at law familiar with the law of the jurisdiction involved. A copy (in the English language) of a statute (if other than the United States statute) or a court decision (if other than a reported decision of a federal court or a decision reported in the United States Patents Quarterly) relied on to demonstrate a proprietary interest should be made of record.

Although petitioner has provided a legal memorandum, it is not apparent that Mark Goodwin is an attorney at law familiar with the law of the jurisdiction. To the extent that Mark Goodwin is an attorney of law, a statement to that fact should be provided. It should further be noted that the Affidavit by John Silverwood has not been considered because it is illegible.

Showing That Such Action Is Necessary to Preserve the Rights of Parties or to Prevent Irreparable Damage.

As to item (6), applicant has failed to provide a statement that the granting of rule 47 status is necessary to preserve the rights of the rule 47 applicant or prevent irreparable damage. See MPEP 409.03(h).

Further correspondence with respect to this matter should be addressed as follows:

By mail: Mail Stop Petition
Commissioner for Patents
P.O. Box 1450
Alexandria, VA 22313-1450

By facsimile: (571) 273-8300

By delivery service:
(FedEx, UPS, DHL, etc.)

U.S. Patent and Trademark Office
Customer Service Window, Mail Stop Petition
Randolph Building
401 Dulany Street
Alexandria, VA 22314

Telephone inquiries regarding this decision should be directed to the undersigned at (571) 272-3215.

Charlema R. Grant

Charlema R. Grant
Petitions Attorney
Office of Petitions

UNITED STATES PATENT AND TRADEMARK OFFICE

Commissioner for Patents
United States Patent and Trademark Office
P.O. Box 1450
Alexandria, VA 22313-1450
www.uspto.gov

SALTER & MICHAELSON
THE HERITAGE BUILDING
321 SOUTH MAIN STREET
PROVIDENCE RI 02903-7128

COPY MAILED

JUN 2 0 2008

OFFICE OF PETITIONS

In re Application of	:	
Christopher John Hall and Najem Yaqub	:	DECISION GRANTING STATUS
Application No. 11/803,849	:	UNDER 37 CFR 1.47(b)
Filed: May 16, 2007	:	
Attorney Docket No. 01056-5	:	

This is a decision on the petition filed, May 19, 2008, requesting reconsideration of a decision mailed February 19, 2008, which refused to accord 37 CFR 1.47(b) status to the above-identified application.

The petition is **GRANTED.**

Petitioner has shown that the non-signing inventors Hall and Yaqub refuse to join in the filing of the above-identified application.

The application and papers have been reviewed and found in compliance with 37 CFR 1.47(b). This application is hereby accorded Rule 1.47(b) status.

As provided in 37 CFR 1.47(c), this Office will forward notice of this application's filing to the non-signing inventor at the address given in the petition. Notice of the filing of this application will also be published in the Official Gazette.

This application is being referred to the Office of Patent Application Processing for pre-examination processing.

Telephone inquiries regarding this decision should be directed to the undersigned at (571) 272-3215.

Charlema Grant
Petitions Attorney
Office of Petitions

UNITED STATES PATENT AND TRADEMARK OFFICE

Commissioner for Patents
United States Patent and Trademark Office
P.O. Box 1450
Alexandria, VA 22313-1450
www.uspto.gov

Najem Yaqub
47 Frederick Street
Werneth Oldham, Greater Manchester OL8 4AG
United Kingdom

COPY MAILED

JUN 20 2008

OFFICE OF PETITIONS

In re Application of
Christopher John Hall and Najem Yaqub
Application No. 11/803,849
Filed: May 16, 2007
Attorney Docket No. 01056-5
Title: Cleaning Composition

Dear inventor Yaqub:

You are named as a joint inventor in the above-identified United States patent application, filed under the provisions of 35 U.S.C. 116 (United States Code), and 37 CFR 1.47(b), Rules of Practice in Patent Cases. Should a patent be granted on the application you will be designated therein as a co- inventor.

As a named inventor you are entitled to inspect any paper in the file wrapper of the application, order copies of all or any part thereof (at a prepaid cost per 37 CFR 1.19) or make your position of record in the application. Alternatively, you may arrange to do any of the preceding through a registered patent attorney or agent presenting written authorization from you. If you care to join the application, counsel of record (see below) would presumably assist you. Joining the application would entail the filing of an appropriate oath or declaration by you pursuant to 37 CFR 1.63.

Telephone inquiries regarding this communication should be directed to Charlema Grant at (571) 272-3215. Requests for information regarding your application should be directed to the File Information Unit at (703) 308-2733. Information regarding how to pay for and order a copy of the application, or a specific paper in the application, should be directed to the Certification Division at (571) 272-3150 or 1 (800) 972-6382 (outside the Washington, DC area).

Charlema Grant
Petitions Attorney
Office of Petitions

SALTER & MICHAELSON
THE HERITAGE BUILDING
321 SOUTH MAIN STREET
PROVIDENCE RI 02903-7128

UNITED STATES PATENT AND TRADEMARK OFFICE

Commissioner for Patents
United States Patent and Trademark Office
P.O. Box 1450
Alexandria, VA 22313-1450
www.uspto.gov

Christopher John Hall
Carmill 24 Mill Lane
Chester, Cheshire CH2 1BT
United Kingdom

COPY MAILED

JUN 20 2008

OFFICE OF PETITIONS

In re Application of
Christopher John Hall and Najem Yaqub
Application No. 11/803,849
Filed: May 16, 2007
Attorney Docket No. 01056-5
Title: Cleaning Composition

Dear Mr. Hall:

You are named as a joint inventor in the above-identified United States patent application, filed under the provisions of 35 U.S.C. 116 (United States Code), and 37 CFR 1.47(b), Rules of Practice in Patent Cases. Should a patent be granted on the application you will be designated therein as a co- inventor.

As a named inventor you are entitled to inspect any paper in the file wrapper of the application, order copies of all or any part thereof (at a prepaid cost per 37 CFR 1.19) or make your position of record in the application. Alternatively, you may arrange to do any of the preceding through a registered patent attorney or agent presenting written authorization from you. If you care to join the application, counsel of record (see below) would presumably assist you. Joining the application would entail the filing of an appropriate oath or declaration by you pursuant to 37 CFR 1.63.

Telephone inquiries regarding this communication should be directed to Charlema Grant at (571) 272-3215. Requests for information regarding your application should be directed to the File Information Unit at (703) 308-2733. Information regarding how to pay for and order a copy of the application, or a specific paper in the application, should be directed to the Certification Division at (571) 272-3150 or 1 (800) 972-6382 (outside the Washington, DC area).

Charlema Grant

Charlema Grant
Petitions Attorney
Office of Petitions

SALTER & MICHAELSON
THE HERITAGE BUILDING
321 SOUTH MAIN STREET
PROVIDENCE RI 02903-7128

UNITED STATES PATENT AND TRADEMARK OFFICE

Commissioner for Patents
United States Patent and Trademark Office
P.O. Box 1450
Alexandria, VA 22313-1450
www.uspto.gov

KIRKPATRICK & LOCKHART PRESTON GATES ELLIS LLP
(FORMERLY KIRKPATRICK & LOCKHART NICHOLSON GRAHAM)
STATE STREET FINANCIAL CENTER
ONE LINCOLN STREET
BOSTON MA 02111-2950

COPY MAILED

OCT 0 1 2007

OFFICE OF PETITIONS

In re Application of	:	
GAMBALE, Richard A.	:	
Application No. 11/803,956	:	DECISION ON PETITION
Filed: May 16, 2007	:	TO WITHDRAW
Attorney Docket No. **B0751/7028C1**	:	FROM RECORD
	:	

This is a decision on the Request to Withdraw as attorney or agent of record under 37 C.F.R. § 1.36(b), filed June 11, 2007.

The request is **NOT APPROVED**.

A grantable request to withdraw as attorney/agent of record must be signed by every attorney/agent seeking to withdraw or contain a clear indication that one attorney is signing on behalf of another/others. A request to withdraw will not be approved unless at least 30 (thirty) days would remain between the date of approval and the later of the expiration date of a time to file a response or the expiration date of the maximum time period which can be extended under 37 C.F.R. § 1.136(a).

The Office cannot approve the request at this time since the reasons provided do not meet any of the conditions under the mandatory or permissive categories enumerated in 37 CFR 10.40. Section 10.40 of Title 37 of the Code of Federal Regulation states, "[a] practitioner shall not withdraw from employment in a proceeding before the Office without permission from the Office[.]" More specifically, 37 CFR 10.40 states, "[i]f paragraph (b) of this section is not applicable, a practitioner may not request permission to withdraw in matter pending before the Office unless such request or such withdrawal is" for one the permissive reasons listed in 37 CFR 10.40(c). The reasons set forth in the request, responsibility for this matter has been transferred, does not meet any of the conditions set forth in 37 CFR 10.40.

All future communications from the Office will continue to be directed to the above-listed address until otherwise notified by applicant.

Telephone inquiries concerning this decision should be directed to Tredelle Jackson at 571-272- 2783.

Monica A. Graves
Petitions Examiner
Office of Petitions

cc: **JASON M. HONEYMAN**
WOLF, GREENFIELD & SACKS, P.C.
600 ATLANTIC AVENUE
BOSTON, MA 02210-2206

UNITED STATES PATENT AND TRADEMARK OFFICE

Commissioner for Patents
United States Patent and Trademark Office
P.O. Box 1450
Alexandria, VA 22313-1450
www.uspto.gov

COPY MAILED

JAN 12 2009

KINNEY & LANGE, P.A.
THE KINNEY & LANGE BUILDING
312 SOUTH THIRD STREET
MINNEAPOLIS MN 55415-1002

In re Application of	:	
Swapan Chakraborty	:	
Application No. 11/803,971	:	DECISION GRANTING PETITION
Filed: May 16, 2007	:	UNDER 37 CFR 1.313(c)(2)
Attorney Docket No. E252.12-0066	:	

This is a decision on the petition under 37 CFR 1.313(c)(2), filed , to withdraw the above-identified application from issue after payment of the issue fee.

The petition is **GRANTED**.

The above-identified application is withdrawn from issue for consideration of a submission under 37 CFR 1.114 (request for continued examination). *See* 37 CFR 1.313(c)(2).

Petitioner is advised that the issue fee paid on December 15, 2008 cannot be refunded. If, however, this application is again allowed, petitioner may request that it be applied towards the issue fee required by the new Notice of Allowance.[1]

Telephone inquiries should be directed to the undersigned at (571) 272-3208.

This application is being referred to Technology Center AU 2855 for processing of the request for continued examination under 37 CFR 1.114 and for consideration of the concurrently filed IDS.

/Karen Creasy/
Karen Creasy
Petitions Examiner
Office of Petitions

---

[1] *The request to apply the issue fee to the new Notice may be satisfied by completing and returning the new Part B – Fee(s) Transmittal Form (along with any balance due at the time of submission). Petitioner is advised that the Issue Fee Transmittal Form* ***must*** *be completed and timely submitted to avoid abandonment of the application.*

UNITED STATES PATENT AND TRADEMARK OFFICE

Commissioner for Patents
United States Patent and Trademark Office
P.O. Box 1450
Alexandria, VA 22313-1450
www.uspto.gov

ROBERT E. REILLY
73440 LITTLE BEND TRAIL
PALM DESERT, CA 92260

COPY MAILED

JUN 29 2007

OFFICE OF PETITIONS

In re Application of	:	
Robert E. Reilly	:	
Application No. 11/803,990	:	DECISION ON PETITION
Filed: May 16, 2007	:	TO MAKE SPECIAL UNDER
Attorney Docket No. SB 1737	:	37 CFR 1.102(c)(1)
	:	

This is a decision on the petition under 37 CFR 1.102(c)(1), filed June 4, 2007 and June 8, 2007, to make the above-identified application special based on applicant's age as set forth in M.P.E.P. § 708.02, Section IV.

The petition is **GRANTED**.

A grantable petition to make an application special under 37 CFR 1.102(c)(1) and MPEP § 708.02, Section IV: Applicant's Age must be accompanied by evidence showing that at least one of the applicants is 65 years of age, or more, such as a birth certificate or a statement by applicant. No fee is required

The instant petition includes a copy of applicant's drivers license. Accordingly, the above-identified application has been accorded "special" status.

Telephone inquiries concerning this decision should be directed to undersigned at 571-272-1642.

All other inquiries concerning either the examination or status of the application should be directed to the Technology Center.

This application is being referred to the Office of Initial Patent Examination for processing.
This application will be accorded "special" status when pre-examination processing is done.

April M. Wise
Petitions Examiner
Office of Petitions

SPE RESPONSE FOR CERTIFICATE OF CORRECTION

Paper No.: _____

DATE : 10/16/09

TO SPE OF : ART UNIT 2112
SUBJECT : Request for Certificate of Correction for Appl. No 11803995 No.: 7,525,438

Please respond to this request for a certificate of correction within 7 days.

FOR IFW FILES:

Please review the requested changes/corrections as shown in the **COCIN** document(s) in the IFW application image. No new matter should be introduced, nor should the scope or meaning of the claims be changed.

Please complete the response (see below) and forward the completed response to scanning using document code **COCX**.

FOR PAPER FILES:

Please review the requested changes/corrections as shown in the attached certificate of correction. Please complete this form (see below) and forward it with the file to:

Certificates of Correction Branch (CofC)

Should the change Be made?

RoChaun Johnson
Certificates of Correction Branch
571 272-0470

Thank You For Your Assistance

The request for issuing the above-identified correction(s) is hereby:
Note your decision on the appropriate box.

- [X] **Approved** — **All** changes apply.
- [ ] **Approved in Part** — Specify below which changes **do not** apply.
- [ ] **Denied** — State the reasons for denial below.

Comments: ok to enter.

DANIEL WU
SUPERVISORY PATENT EXAMINER

SPE

2612
Art Unit

UNITED STATES PATENT AND TRADEMARK OFFICE

Commissioner for Patents
United States Patent and Trademark Office
P.O. Box 1450
Alexandria, VA 22313-1450
www.uspto.gov

COPY MAILED

AUG 1 5 2007

OFFICE OF PETITIONS

Jon D. Wood
Chief I.P. Counsel
Bridgestone Americas Holding, Inc.
120 Firestone Parkway
Akron, OH 44317

In re Application of	:	
Hogan, et al.	:	
Application No. 11/804,022	:	DECISION GRANTING PETITION
Filed: May 16, 2007	:	
Attorney Docket No. **P0604US2A(P434)**	:	

This is a decision on the petition filed June 20, 2007, under 37 CFR 1.10(d) requesting that the above-cited application be accorded a filing date of May 16, 2007.

Petitioner alleges that the application was deposited with the United States Postal Service,"Express Mail" service on May 16, 2007, but an the "date-in", as found on the "Express Mail" mailing label, was incorrectly cited as May 17, 2007. In support of the allegation, the petition is accompanied by a copy of the "Express Mail" label with a tracking number EV018081089US showing a "date-in" of May 16, 2007, and a copy of the "Track and Confirm" sheet printed from the United States Postal Service website showing that EV018081089US package was received on May 16, 2007. The tracking number cited is the same number found on the application transmittal sheet that accompanied the original application papers. The evidence is convincing that the application papers were deposited with the "Express Mail" service on May 16, 2007.

In view of the above, the petition is granted. The new filing date for the above-cited application is May 16, 2007.

The address cited on the petition differs from the address of record. Although a courtesy copy of this decision is being mailed to the address cited on the petition, all future correspondence will be mailed solely to the address of record until appropriate written instructions to the contrary are received.

The Office of Initial Patent Examination will further process the application with a filing date of May 16, 2007, and issue a corrected filing receipt.

Any inquiries related to this decision should be directed to the undersigned at (571)272-3222.

Kenya A. McLaughlin
Petitions Attorney
Office of Petitions

cc:
Arthur M. Reginelli
Renner, Kenner, Grieve, Bobak, Taylor & Weber
Fourth Floor, First National Tower
Akron, OH 44308-1456

UNITED STATES PATENT AND TRADEMARK OFFICE

Commissioner for Patents
United States Patent and Trademark Office
P.O. Box 1450
Alexandria, VA 22313-1450
www.uspto.gov

BROOKS, CAMERON & HUEBSCH , PLLC
1221 NICOLLET AVENUE, SUITE 500
MINNEAPOLIS MN 55403

MAILED

MAY 28 2009

OFFICE OF PETITIONS

In re Application of	:	
Stephen H. Purvines	:	
Application No. 11/804,076	:	DECISION ON PETITION
Filed: May 17, 2007	:	TO WITHDRAW
Attorney Docket No. 900.0140001	:	FROM RECORD
	:	

This is a decision on the Request to Withdraw as attorney or agent of record under 37 C.F.R. § 1.36(b), filed April 7, 2009.

The request is **APPROVED**.

A grantable request to withdraw as attorney/agent of record must be signed by every attorney/agent seeking to withdraw or contain a clear indication that one attorney is signing on behalf of another/others. In order to request or take action in a patent matter, the assignee must establish its ownership of the patent to the satisfaction of the Director. In this regard, a Statement under 37 CFR 3.73(b) must have either: (i) documentary evidence of a chain of title from the original owner to the assignee (*e.g.*, copy of an executed assignment), and a statement affirming that the documentary evidence of the chain of title from the original owner to the assignee was or concurrently is being submitted for recordation pursuant to § 3.11; or (ii) a statement specifying where documentary evidence of a chain of title from the original owner to the assignee is recorded in the assignment records of the Office (*e.g.*, reel and frame number).

The request was signed by Edward J. Brooks, on behalf of all attorneys of record who are associated with customer No. 38356. All attorneys/agents associated with the Customer Number 38356 have been withdrawn. Applicant is reminded that there is no attorney of record at this time.

The request to change the correspondence of record is not acceptable as the requested correspondence address is not that of: (1) the first named signing inventor; or (2) an intervening assignee of the entire interest under 37 C.F.R 3.71. All future communications from the Office will be directed to the first named signing inventor at the first copied address below until otherwise properly notified by the applicant.

In order to request or take action in a patent matter, the assignee must establish its ownership of the patent to the satisfaction of the Director. In this regard, a Statement under 37 CFR 3.73(b) must have either: (i) documentary evidence of a chain of title from the original owner to the assignee (*e.g.*, copy of an executed assignment), and a statement affirming that the documentary evidence of the chain of title from the original owner to the assignee was or concurrently is being submitted for recordation pursuant to § 3.11; or (ii) a statement specifying where documentary evidence of a chain of title from the original owner to the assignee is recorded in the assignment records of the Office (*e.g.*, reel and frame number).

There is an outstanding Office action mailed April 29, 2009 that requires a reply from the applicant.

Telephone inquiries concerning this decision should be directed to undersigned at 571-272-1642. All other inquiries concerning the examination or status of this application should be directed to the Technology Center.

/AMW/
April M. Wise
Petitions Examiner
Office of Petitions

cc: STEPHEN H. PURVINES
15561 CARRIAGE LANE
MISHIWAKA, IN 46545

cc: KURZ-KASCH, INC
511 BYERS ROAD
MIAMISBURG, OH 45342

UNITED STATES PATENT AND TRADEMARK OFFICE

UNITED STATES DEPARTMENT OF COMMERCE
United States Patent and Trademark Office
Address: COMMISSIONER FOR PATENTS
P.O. Box 1450
Alexandria, Virginia 22313-1450
www.uspto.gov

APPLICATION NUMBER	FILING OR 371(C) DATE	FIRST NAMED APPLICANT	ATTY. DOCKET NO./TITLE
11/804,076	05/17/2007	Stephen H. Purvines	900.0140001

CONFIRMATION NO. 8066

POWER OF ATTORNEY NOTICE

38356
BROOKS, CAMERON & HUEBSCH , PLLC
1221 NICOLLET AVENUE , SUITE 500
MINNEAPOLIS, MN 55403

OC000000036031842

Date Mailed: 05/18/2009

NOTICE REGARDING CHANGE OF POWER OF ATTORNEY

This is in response to the Power of Attorney filed 04/07/2009.

- The withdrawal as attorney in this application has been accepted. Future correspondence will be mailed to the new address of record. 37 CFR 1.33.

/amwise/

Office of Data Management, Application Assistance Unit (571) 272-4000, or (571) 272-4200, or 1-888-786-0101

UNITED STATES PATENT AND TRADEMARK OFFICE

Commissioner for Patents
United States Patent and Trademark Office
P.O. Box 1450
Alexandria, VA 22313-1450
www.uspto.gov

MAILED

JUN 29 2009

OFFICE OF PETITIONS

BROOKS CAMERON & HUEBSCH, PLLC
1221 NICOLLET AVENUE, SUITE 500
MINNEAPOLIS, MN 55403

In re Application of	:	
Stephen H. Purvines	:	
Application No. 11/804,078	:	DECISION ON PETITION
Filed: May 17, 2007	:	TO WITHDRAW
Attorney Docket No. 900.0130001	:	FROM RECORD
	:	

This is a decision on the Request to Withdraw as attorney or agent of record under 37 C.F.R. § 1.36(b), filed April 6, 2009.

The request is **APPROVED**.

The request was signed by Edward J. Brooks III on behalf of all attorneys of record who are associated with customer No. 38356.

Applicant is reminded that there is no attorney of record at this time.

All future correspondence will be directed to assignee Kurz-Kasch, Inc., at the address indicated below.

Telephone inquiries concerning this decision should be directed to Irvin Dingle at (571) 272-3210.

Irvin Dingle
Petitions Examiner
Office of Petitions

cc: Kurz-Kasch, Inc.
511 Byers Road
Miamisburg, OH 45342

UNITED STATES PATENT AND TRADEMARK OFFICE

Commissioner for Patents
United States Patent and Trademark Office
P.O. Box 1450
Alexandria, VA 22313-1450
www.uspto.gov

BROOKS, CAMERON & HUEBSCH , PLLC
1221 NICOLLET AVENUE , SUITE 500
MINNEAPOLIS MN 55403

MAILED

MAY 11 2009

OFFICE OF PETITIONS

In re Application of
PURVINES, Stephen H.
Application No. 11/804,080
Filed: May 17, 2007
Attorney Docket No. **900.0120001**

DECISION ON PETITION
TO WITHDRAW
FROM RECORD

This is a decision on the Request to Withdraw as attorney or agent of record under 37 C.F.R. § 1.36(b), filed April 06, 2009.

The request is **APPROVED**.

A grantable request to withdraw as attorney/agent of record must be signed by every attorney/agent seeking to withdraw or contain a clear indication that one attorney is signing on behalf of another/others. The Office requires the practitioner(s) requesting withdrawal to certify that he, she, or they have: (1) given reasonable notice to the client, prior to the expiration of the response period, that the practitioner(s) intends to withdraw from employment; (2) delivered to the client or a duly authorized representative of the client all papers and property (including funds) to which the client is entitled; and (3) notified the client of any responses that may be due and the time frame within which the client must respond, pursuant 37 CFR 10.40(c).

The request was signed by Edward J. Brooks, III on behalf of all attorneys of record who are associated with customer No. 38356. All attorneys/agents associated have been withdrawn. Applicant is reminded that there is no attorney of record at this time.

The request to change the correspondence address of record is not acceptable as the requested correspondence address is not that of: (1) the first named signing inventor; or (2) an intervening assignee of the entire interest under 37 C.F.R 3.71. All future communications from the Office will be directed to the first named signing inventor.

There is an outstanding Office action mailed April 28, 2009 that requires a reply from the applicant.

Telephone inquiries concerning this decision should be directed to Michelle R. Eason at 571-272-4231.

Michelle R. Eason
Paralegal Specialist
Office of Petitions

cc: **STEPHEN H. PURVINES**
15561 CARRIAGE LANE
MISHIWAKA, IN 46545

cc: **KURZ-KASCH, INC.**
511 BYERS ROAD
MIAMISBURG, OH 45342

UNITED STATES PATENT AND TRADEMARK OFFICE

Commissioner for Patents
United States Patent and Trademark Office
P.O. Box 1450
Alexandria, VA 22313-1450
www.uspto.gov

MOLEX INCORPORATED
2222 WELLINGTON COURT
LISLE IL 60532

MAILED

SEP 14 2009

OFFICE OF PETITIONS

In re Application of	:	
Zaderej et al.	:	
Application No. 11/804,081	:	DECISION ON PETITION
Filed: May 17, 2007	:	UNDER 37 CFR 1.78(a)(3)
Attorney Docket No. A2-228 US DIV1	:	

This is a decision on the petition under 37 CFR 1.78(a)(3), filed March 26, 2009, to accept an unintentionally delayed claim under 35 U.S.C. §§120 and 365(c) for the benefit of the prior-filed applications set forth in the concurrently filed amendment.

The petition is **DISMISSED**.

A petition for acceptance of a claim for late priority under 37 CFR 1.78(a)(3) is only applicable to those applications filed on or after November 29, 2000. Further, the petition is appropriate only after the expiration of the period specified in 37 CFR 1.78(a)(2)(ii). In addition, the petition under 37 CFR 1.78(a)(3) must be accompanied by:

(1) the reference required by 35 U.S.C. § 120 and 37 CFR 1.78(a)(2)(i) of the prior-filed application(s), unless previously submitted;
(2) the surcharge set forth in § 1.17(t); and
(3) a statement that the entire delay between the date the claim was due under 37 CFR 1.78(a)(2)(ii) and the date the claim was filed was unintentional. The Commissioner may require additional information where there is a question whether the delay was unintentional.

As stated in MPEP § 201.11(f), in addition to the petition under 37 CFR 1.78 and the amendment or ADS, to add a benefit claim it may be necessary for applicant to file one of the following, depending on the status of the application:

(A) a request for continued examination (RCE) under 37 CFR 1.114, if the application is under a final rejection or has been allowed (see MPEP §706.07(h)). An amendment or ADS filed after final rejection or allowance is not entered as a matter of right and must be filed in compliance with 37 CFR 1.116 or 1.312, respectively; or
(B) a reissue application or a request for a certificate of correction under 37 CFR 1.323, if appropriate (see MPEP § § 1402 and 1481), if the application has issued as a patent.

Further, the Office proposed changing Sec. 1.312 to provide that any amendment filed after the date the issue fee is paid must be accompanied by: (1) A petition under Sec. 1.313(c)(1) to withdraw the application from issue; (2) an unequivocal statement that one or more claims are unpatentable; and (3) an explanation as to how the amendment is necessary to render such claim or claims patentable. The Office is adopting this change to Sec. 1.312 by clarifying that an amendment under Sec. 1.312 (after allowance) must be filed prior to or with payment of the issue fee, and eliminating Sec. 1.312(b) (since the provisions of proposed Sec. 1.312(b) are duplicative of the provisions of proposed and adopted Sec. 1.313(c)(1)).

Accordingly, because the issue fee was received prior to the petition under 37 CFR 1.78(a)(3), a petition to withdraw the application from issue and an RCE (with the requisite fees), along with a renewed petition under 37 CFR 1.78(a)(3), are required.

Further correspondence with respect to this matter should be addressed as follows:

By mail: Mail Stop PETITIONS
Commissioner for Patents
Post Office Box 1450
Alexandria, VA 22313-1450

By hand: Customer Window located at:
U.S. Patent and Trademark Office
Customer Service Window Randolph Building
401 Dulany Street
Alexandria, VA 22314

By fax: (571) 273-8300
ATTN: Office of Petitions

Any questions concerning this matter may be directed to the undersigned at (571) 272-3206.

/Liana Walsh/
Liana Walsh
Petitions Examiner
Office of Petitions

UNITED STATES PATENT AND TRADEMARK OFFICE

COMMISSIONER FOR PATENTS
UNITED STATES PATENT AND TRADEMARK OFFICE
P.O. BOX 1450
ALEXANDRIA, VA 22313-1450
www.uspto.gov

MOLEX INCORPORATED
2222 WELLINGTON COURT
LISLE IL 60532

MAILED

SEP 25 2009

OFFICE OF PETITIONS

In re Application of	:	
Victor Zaderej et al	:	
Application No. 11/804,081	:	DECISION GRANTING PETITION
Filed: May 17, 2007	:	UNDER 37 CFR 1.313(c)(2)
Attorney Docket No. A2-228 US DIV1	:	

This is a decision on the petition under 37 CFR 1.313(c)(2), filed September 22, 2009, to withdraw the above-identified application from issue after payment of the issue fee.

The petition is **GRANTED**.

The above-identified application is withdrawn from issue for consideration of a submission under 37 CFR 1.114 (request for continued examination). *See* 37 CFR 1.313(c)(2).

Petitioner is advised that the issue fee paid on March 16, 2009 cannot be refunded. If, however, this application is again allowed, petitioner may request that it be applied towards the issue fee required by the new Notice of Allowance.[1]

Telephone inquiries should be directed to the undersigned at (571) 272-3208.

This application is being retained in the Office of Petitions for consideration of the concurrently filed petition under 37 CFR 1.78(a)(3). Afterwards, the application will be referred to Technology Center AU 2839 for processing of the request for continued examination under 37 CFR 1.114 and for consideration by the examiner of applicant's entitlement to claim benefit of priority under 35 U.S.C. §§ 120 and 365(c) to the prior-filed applications.

/Karen Creasy/
Karen Creasy
Petitions Examiner
Office of Petitions

---

[1] *The request to apply the issue fee to the new Notice may be satisfied by completing and returning the new Part B – Fee(s) Transmittal Form (along with any balance due at the time of submission). Petitioner is advised that the Issue Fee Transmittal Form* ***must*** *be completed and timely submitted to avoid abandonment of the application.*

UNITED STATES PATENT AND TRADEMARK OFFICE

Commissioner for Patents
United States Patent and Trademark Office
P.O. Box 1450
Alexandria, VA 22313-1450
www.uspto.gov

MOLEX INCORPORATED
2222 WELLINGTON COURT
LISLE IL 60532

COPY MAILED

NOV 16 2009

OFFICE OF PETITIONS

In re Application of	:
Zaderej et al.	:
Application No. 11/804,081	: DECISION GRANTING PETITION
Filed: May 17, 2007	: UNDER 37 CFR 1.78(a)(3) AND
Attorney Docket No. A2-228 US DIV1	: UNDER 37 CFR 1.78(a)(6)

This is a decision on the renewed petitions under 37 CFR §§ 1.78(a)(3) and 1.78(a)(6), filed September 22, 2009, to accept an unintentionally delayed claim under 35 U.S.C. §§120, 365(c) and 119(e) for the benefit of the prior-filed applications set forth in the concurrently filed amendment.

The petitions are **GRANTED**.

A petition for acceptance of a claim for late priority under 37 CFR §§ 1.78(a)(3) and 1.78(a)(6) is only applicable to those applications filed on or after November 29, 2000. Further, the petition is appropriate only after the expiration of the period specified in 37 CFR §§ 1.78(a)(2)(ii) and 1.78(a)(5)(ii). In addition, the petition under 37 CFR §§ 1.78(a)(3) and 1.78(a)(6) must be accompanied by:

(1) the reference required by 35 U.S.C. §§ 120 and 119(e) and 37 CFR §§ 1.78(a)(2)(i) and 1.78(a)(5)(i) of the prior-filed application, unless previously submitted;
(2) the surcharge set forth in § 1.17(t); and
(3) a statement that the entire delay between the date the claim was due under 37 CFR §§ 1.78(a)(2)(ii) and 1.78(a)(5)(ii) and the date the claim was filed was unintentional. The Commissioner may require additional where there is a question whether the delay was unintentional.

The instant application was filed on May 17, 2007 and was pending at the time of filing of the instant petition. A reference to the prior-filed applications has been included in an amendment to the first sentence of the specification following the title, as required by 37 CFR §§ 1.78(a)(2)(iii) and 1.78(a)(5)(iii).

The instant nonprovisional application was filed after November 29, 2000, and the claim for priority herein is submitted after expiration of the period specified in 37 CFR §§ 1.78(a)(2)(ii) and 1.78(a)(5)(ii). *See* 35 U.S.C. §§ 120 and 365(c) and § 119(e). Accordingly, having found that the instant petition satisfies the conditions of 37 CFR §§ 1.78(a)(3) and 1.78(a)(6) for

acceptance of an unintentionally delayed claim for priority under 35 U.S.C. §§ 120 and 365(c) and § 119(e), the petition to accept an unintentionally delayed claim of benefit to the prior-filed applications is granted.

The granting of the petition to accept the delayed benefit claim to the prior-filed applications under 37 CFR §§ 1.78(a)(3) and 1.78(a)(6) should not be construed as meaning that the instant application is entitled to the benefit of the filing date of the prior-filed applications. In order for the instant application to be entitled to the benefit of the prior-filed applications, all other requirements under 35 U.S.C. §120 and 1.78(a)(1) and (a)(2) and under 35 U.S.C. §119(e) and 37 CFR 1.78(a)(4) and (a)(5) must be met. Similarly, the fact that the corrected Filing Receipt accompanying this decision on petition includes the prior-filed applications should not be construed as meaning that applicant is entitled to the claim for benefit of priority to the prior-filed applications noted thereon. Accordingly, the examiner will, in due course, consider this benefit claim and determine whether the instant application is entitled to the benefit of the earlier filing date.

A corrected Filing Receipt, which includes the priority claim to the prior-filed applications, accompanies this decision on petition.

Any questions concerning this matter may be directed to the undersigned at (571) 272-3206.

This matter is being referred to Technology Center Art Unit 2839 for appropriate action on the amendment submitted September 22, 2009, including consideration by the examiner of the claim under 35 U.S.C. § §120 and 365(c) and 37 CFR 1.78(a)(2) for the benefit of the prior-filed applications, and for consideration of the claim under 35 U.S.C. §119(e) and 37 CFR 1.78(a)(5) for the benefit of the prior-filed provisional application.

Liana Walsh
Petitions Examiner
Office of Petitions

ATTACHMENT: Corrected Filing Receipt

UNITED STATES PATENT AND TRADEMARK OFFICE

UNITED STATES DEPARTMENT OF COMMERCE
United States Patent and Trademark Office
Address: COMMISSIONER FOR PATENTS
P.O. Box 1450
Alexandria, Virginia 22313-1450
www.uspto.gov

APPLICATION NUMBER	FILING or 371(c) DATE	GRP ART UNIT	FIL FEE REC'D	ATTY.DOCKET.NO	TOT CLAIMS	IND CLAIMS
11/804,081	05/17/2007	2839	1520	A2-228 US DIV1	6	3

CONFIRMATION NO. 8080

CORRECTED FILING RECEIPT

23683
MOLEX INCORPORATED
2222 WELLINGTON COURT
LISLE, IL 60532

OC000000038496029

Date Mailed: 10/28/2009

Receipt is acknowledged of this non-provisional patent application. The application will be taken up for examination in due course. Applicant will be notified as to the results of the examination. Any correspondence concerning the application must include the following identification information: the U.S. APPLICATION NUMBER, FILING DATE, NAME OF APPLICANT, and TITLE OF INVENTION. Fees transmitted by check or draft are subject to collection. Please verify the accuracy of the data presented on this receipt. **If an error is noted on this Filing Receipt, please submit a written request for a Filing Receipt Correction. Please provide a copy of this Filing Receipt with the changes noted thereon. If you received a "Notice to File Missing Parts" for this application, please submit any corrections to this Filing Receipt with your reply to the Notice. When the USPTO processes the reply to the Notice, the USPTO will generate another Filing Receipt incorporating the requested corrections**

Applicant(s)

Victor Zaderej, St. Charles, IL;
David L. Brunker, Naperville, IL;
Phillip J. Dambach, Naperville, IL;

Power of Attorney: None

Domestic Priority data as claimed by applicant

This application is a DIV of 10/515,299 11/19/2004 PAT 7,273,401
which is a 371 of PCT/US04/07841 03/15/2004 *
which claims benefit of 60/454,883 03/14/2003
(*)Data provided by applicant is not consistent with PTO records.

Foreign Applications

If Required, Foreign Filing License Granted: 10/27/2009

The country code and number of your priority application, to be used for filing abroad under the Paris Convention, is **US 11/804,081**

Projected Publication Date: Not Applicable

Non-Publication Request: No

Early Publication Request: No

Title

GROUPED ELEMENT TRANSMISSION CHANNEL LINK WITH PEDESTAL ASPECTS

Preliminary Class

439

PROTECTING YOUR INVENTION OUTSIDE THE UNITED STATES

Since the rights granted by a U.S. patent extend only throughout the territory of the United States and have no effect in a foreign country, an inventor who wishes patent protection in another country must apply for a patent in a specific country or in regional patent offices. Applicants may wish to consider the filing of an international application under the Patent Cooperation Treaty (PCT). An international (PCT) application generally has the same effect as a regular national patent application in each PCT-member country. The PCT process **simplifies** the filing of patent applications on the same invention in member countries, but **does not result** in a grant of "an international patent" and does not eliminate the need of applicants to file additional documents and fees in countries where patent protection is desired.

Almost every country has its own patent law, and a person desiring a patent in a particular country must make an application for patent in that country in accordance with its particular laws. Since the laws of many countries differ in various respects from the patent law of the United States, applicants are advised to seek guidance from specific foreign countries to ensure that patent rights are not lost prematurely.

Applicants also are advised that in the case of inventions made in the United States, the Director of the USPTO must issue a license before applicants can apply for a patent in a foreign country. The filing of a U.S. patent application serves as a request for a foreign filing license. The application's filing receipt contains further information and guidance as to the status of applicant's license for foreign filing.

Applicants may wish to consult the USPTO booklet, "General Information Concerning Patents" (specifically, the section entitled "Treaties and Foreign Patents") for more information on timeframes and deadlines for filing foreign patent applications. The guide is available either by contacting the USPTO Contact Center at 800-786-9199, or it can be viewed on the USPTO website at http://www.uspto.gov/web/offices/pac/doc/general/index.html.

For information on preventing theft of your intellectual property (patents, trademarks and copyrights), you may wish to consult the U.S. Government website, http://www.stopfakes.gov. Part of a Department of Commerce initiative, this website includes self-help "toolkits" giving innovators guidance on how to protect intellectual property in specific countries such as China, Korea and Mexico. For questions regarding patent enforcement issues, applicants may call the U.S. Government hotline at 1-866-999-HALT (1-866-999-4158).

LICENSE FOR FOREIGN FILING UNDER

Title 35, United States Code, Section 184

Title 37, Code of Federal Regulations, 5.11 & 5.15

GRANTED

The applicant has been granted a license under 35 U.S.C. 184, if the phrase "IF REQUIRED, FOREIGN FILING LICENSE GRANTED" followed by a date appears on this form. Such licenses are issued in all applications where the conditions for issuance of a license have been met, regardless of whether or not a license may be required as

set forth in 37 CFR 5.15. The scope and limitations of this license are set forth in 37 CFR 5.15(a) unless an earlier license has been issued under 37 CFR 5.15(b). The license is subject to revocation upon written notification. The date indicated is the effective date of the license, unless an earlier license of similar scope has been granted under 37 CFR 5.13 or 5.14.

This license is to be retained by the licensee and may be used at any time on or after the effective date thereof unless it is revoked. This license is automatically transferred to any related applications(s) filed under 37 CFR 1.53(d). This license is not retroactive.

The grant of a license does not in any way lessen the responsibility of a licensee for the security of the subject matter as imposed by any Government contract or the provisions of existing laws relating to espionage and the national security or the export of technical data. Licensees should apprise themselves of current regulations especially with respect to certain countries, of other agencies, particularly the Office of Defense Trade Controls, Department of State (with respect to Arms, Munitions and Implements of War (22 CFR 121-128)); the Bureau of Industry and Security, Department of Commerce (15 CFR parts 730-774); the Office of Foreign AssetsControl, Department of Treasury (31 CFR Parts 500+) and the Department of Energy.

NOT GRANTED

No license under 35 U.S.C. 184 has been granted at this time, if the phrase "IF REQUIRED, FOREIGN FILING LICENSE GRANTED" DOES NOT appear on this form. Applicant may still petition for a license under 37 CFR 5.12, if a license is desired before the expiration of 6 months from the filing date of the application. If 6 months has lapsed from the filing date of this application and the licensee has not received any indication of a secrecy order under 35 U.S.C. 181, the licensee may foreign file the application pursuant to 37 CFR 5.15(b).

UNITED STATES PATENT AND TRADEMARK OFFICE

UNITED STATES DEPARTMENT OF COMMERCE
United States Patent and Trademark Office
Address: COMMISSIONER FOR PATENTS
P.O. Box 1450
Alexandria, Virginia 22313-1450
www.uspto.gov

APPLICATION NO.	FILING DATE	FIRST NAMED INVENTOR	ATTORNEY DOCKET NO.	CONFIRMATION NO.
11/804,086	05/17/2007	Richard Allen Hayes	AD7494 US NA	7656

7590 03/16/2009
E I DU PONT DE NEMOURS AND COMPANY
LEGAL PATENT RECORDS CENTER
BARLEY MILL PLAZA 25/1122B
4417 LANCASTER PIKE
WILMINGTON, DE 19805

EXAMINER
NELSON, MICHAEL B

ART UNIT	PAPER NUMBER
1794	

NOTIFICATION DATE	DELIVERY MODE
03/16/2009	ELECTRONIC

DECISION GRANTING PETITION UNDER 37 CFR 1.138(d)

The declaration of express abandonment is recognized

This is in response to the petition under 37 CFR 1.138(d), requesting for a refund of any previously paid search fee and excess claims fee in the above-identified application.

The petition is granted.

The express abandonment is recognized. Any previously paid search fee and excess claims fee are hereby refunded.

Telephone inquiries should be directed to the Office of Data Management at (571) 272-4200.

Patent Publication Branch
Office of Data Management

```
Adjustment date: 03/13/2009  BPOWELL
05/21/2007 EAYALEW1 00000009 041928   11804086
02 FC:1111        500.00 CR
04 FC:1201        200.00 CR
05 FC:1202        350.00 CR
```

```
Adjustment Date: 03/13/2009  BPOWELL
04/27/2007 EAYALEW1 00000097 041928   11789829
02 FC:1111        500.00 CR
04 FC:1202        350.00 CR
```


FORM PET651G (Rev. 08/07)

UNITED STATES PATENT AND TRADEMARK OFFICE

Commissioner for Patents
United States Patent and Trademark Office
P.O. Box 1450
Alexandria, VA 22313-1450
www.uspto.gov

COPY MAILED

AUG 2 4 2007

OFFICE OF PETITIONS

Diran Varzhabedian
601 Cove Road
Stamford, CT 06902-6125

In re Application of	:	
Diran Varzhabedian	:	
Application No. 11/804,087	:	DECISION ON PETITION
Filed: May 17, 2007	:	TO MAKE SPECIAL UNDER
Attorney Docket No.	:	37 CFR 1.102(c)(1)
	:	

This is a decision on the petition under 37 CFR 1.102(c)(1), filed July 23, 2007, to make the above-identified application special based on applicant's age as set forth in M.P.E.P. § 708.02, Section IV.

The petition is **GRANTED**.

A grantable petition to make an application special under 37 CFR 1.102(c)(1) and MPEP § 708.02, Section IV: Applicant's Age must be accompanied by evidence showing that at least one of the applicants is 65 years of age, or more, such as a birth certificate or a statement by applicant. No fee is required

The instant petition includes a signed Affidavit by the applicant. Accordingly, the above-identified application has been accorded "special" status.

Telephone inquiries concerning this decision should be directed to Kimberly Inabinet at 571-272-4618.

All other inquiries concerning either the examination or status of the application should be directed to the Technology Center.

The application is being forwarded to the Technology Center Art Unit 2836 for action on the merits commensurate with this decision.

Frances Hicks

Frances Hicks
Petitions Examiner
Office of Petitions

UNITED STATES PATENT AND TRADEMARK OFFICE

Commissioner for Patents
United States Patent and Trademark Office
P.O. Box 1450
Alexandria, VA 22313-1450
www.uspto.gov

Diran Varzhabedian
601 Cove Road
Stamford CT 06902-6125

COPY MAILED

APR 15 2008

OFFICE OF PETITIONS

In re Application of :
Diran Varzhabedian :
Application No. 11/804,087 : ON PETITION
Filed: May 15, 2007 :
Attorney Docket No. N/A :

This is in response to the communication, filed March 12, 2008, to revive the above-identified application, which is being treated as a petition to withdraw the holding of abandonment.

The petition is **DISMISSED**.

Any request for reconsideration of this decision should be submitted within two (2) months from the mail date of this decision and be entitled "Renewed Petition to Withdraw the Holding of Abandonment under 37 CFR 1.181." *See* 37 CFR 1.181(f).

On September 12, 2007, the Office mailed a non-final Office action, which set a three month shortened statutory period to reply. The application became abandoned on December 13, 2007, for failure to submit a timely response to the non-final Office action.

In the present petition, petitioner requests that the Office withdraw the holding of abandonment due to nonreceipt of the non-final Office action. Specifically, petitioner states that there was no reason to believe that that the Examiner was proceeding with further objections since, together with his supervisor, we had answered all of his objections, and had re-written the claims to be in compliance with USPTO requirements.

DISCUSSION OF PETITION TO WITHDRAW THE HOLDING OF ABANDONMENT

A review of the record indicates no irregularity in the mailing of the non-final Office action, and in the absence of any irregularity in the mailing, there is a strong presumption that the Office action was properly mailed to the address of record.

As petitioner is a pro-se applicant, the Office understands that petitioner may not keep a formal docket record system for his correspondence. Nevertheless, petitioner must provide some sort of

showing explaining the manner in which petitioner receives mail from the USPTO, maintains files for patent matters, and treats mail received for such matter. Specifically, petitioner must explain the system for keeping track of patent matters - where petitioner keeps the correspondence; where he writes down due dates; how he knows replies are due, etc. In essence, petitioner must explain how he reminds himself of response due dates and show that the due date for the non-final Office action of September 12, 2007, was not entered into that system. Petitioner should include any available documentary evidence of the mail received, covering a reasonable period after September 12, 2007, to demonstrate nonreceipt of the non-final Office action. Petitioner should also provide the USPTO with copies of any records or other methods, which could serve as a reminder of the due date for a response to an Office action, and where petitioner would have entered the receipt date of the Office action had petitioner received it (for example, a copy of the outside of a file or a calendar maintained by petitioner), if these documents are available. Furthermore, petitioner must include a statement from himself, or any other person at the address who may have handled the Office action, indicating that a search was conducted of the location where the correspondence from the USPTO would have been kept; however, the non-final Office action was not found. Lastly, petitioner must state that he was, in fact, residing at the correspondence address of record for a reasonable time after September 12, 2007; the period when he would have received the non-final Office action.

In the present petition, petitioner did not submit any statements, documentary evidence, or an explanation of his method for tracking due dates for filing responses to communications from the USPTO to show he did not receive the non-final Office action. Therefore, the petition to withdraw the holding of abandonment is **dismissed**. A copy of the non-final Office action accompanies this decision for petitioner's convenience.

ALTERNATIVE VENUE

Petitioner is strongly encouraged to consider filing a petition under 37 CFR 1.137(b) to revive an unintentionally abandoned application instead of filing a renewed petition under 37 CFR 1.181 or a petition under 37 CFR 1.137(a).

A grantable petition pursuant to 37 CFR 1.137(b) must be accompanied by:

> (1) The reply required to the outstanding Office action or notice, unless previously filed. In nonprovisional utility application abandoned for failure to respond to a non-final Office action, the required reply may be met by filing either (A) an argument or amendment under 37 CFR 1.111 or (B) a continuing application under 37 CFR 1.53(b).
>
> (2) The petition fee as set forth in 37 CFR 1.17(m), **$770.00 for a small entity**;
>
> (3) A statement that the entire delay in filing the required reply from the due date for the reply until the filing of a grantable petition was unintentional. The Director may require additional information where there is a question whether the delay was unintentional.

A form for filing a petition to revive an unintentionally abandoned application accompanies this decision for petitioner's convenience. If petitioner desires to file a petition under 37 CFR

1.137(b) instead of filing a request for reconsideration, petitioner must complete the enclosed petition form (PTO/SB/64) and pay the $770.00 petition fee.

Petitioner may wish to consider hiring a registered patent attorney or agent to assist in the prosecution of this application. Additionally, petitioner is encouraged to contact the Inventors Assistance Center (IAC) by telephone at 800-786-9199 or 571-272-1000, Monday through Friday from 8:30 AM to 5:30 PM (EST). The IAC provides patent information and services to the public and is staffed by former Supervisory Patent Examiners and experienced Primary Examiners who answer general questions concerning patent examining policy and procedure.

Further correspondence with respect to this matter should be addressed as follows:

By mail:	Mail Stop Petition Commissioner for Patents P.O. Box 1450 Alexandria, VA 22313-1450
By FAX:	(571) 273-8300 Attn: Office of Petitions
By hand:	Customer Service Window Randolph Building 401 Dulany Street Alexandria, VA 22314

Telephone inquiries related to this decision may be directed to the undersigned at (571) 272-7099.

David Bucci
Petitions Examiner
Office of Petitions

Enclosures: Petition For Revival Of An Application For Patent Abandoned Unintentionally Under 37 CFR 1.137(b); Form PTO/SB/64, Privacy Act Statement; and a copy of the Office action dated September 12, 2007.

PTO/SB/64 (01-08)
Approved for use through 04/30/2008. OMB 0651-0031
U.S. Patent and Trademark Office; U.S. DEPARTMENT OF COMMERCE
Under the Paperwork Reduction Act of 1995, no persons are required to respond to a collection of information unless it displays a valid OMB control number.

PETITION FOR REVIVAL OF AN APPLICATION FOR PATENT ABANDONED UNINTENTIONALLY UNDER 37 CFR 1.137(b)

Docket Number (Optional)

First named inventor:

Application No.: Art Unit:

Filed: Examiner:

Title:

Attention: Office of Petitions
Mail Stop Petition
Commissioner for Patents
P.O. Box 1450
Alexandria, VA 22313-1450
FAX (571) 273-8300

NOTE: If information or assistance is needed in completing this form, please contact Petitions Information at (571) 272-3282.

The above-identified application became abandoned for failure to file a timely and proper reply to a notice or action by the United States Patent and Trademark Office. The date of abandonment is the day after the expiration date of the period set for reply in the office notice or action plus an extensions of time actually obtained.

APPLICANT HEREBY PETITIONS FOR REVIVAL OF THIS APPLICATION

NOTE: A grantable petition requires the following items:
(1) Petition fee;
(2) Reply and/or issue fee;
(3) Terminal disclaimer with disclaimer fee - required for all utility and plant applications filed before June 8, 1995; and for all design applications; and
(4) Statement that the entire delay was unintentional.

1. Petition fee

☐ Small entity-fee $ _____ (37 CFR 1.17(m)). Applicant claims small entity status. See 37 CFR 1.27.

☐ Other than small entity – fee $ _____ (37 CFR 1.17(m))

2. Reply and/or fee

A. The reply and/or fee to the above-noted Office action in the form of _____(identify type of reply):

☐ has been filed previously on _____.
☐ is enclosed herewith.

B. The issue fee and publication fee (if applicable) of $ _____.

☐ has been paid previously on _____.
☐ is enclosed herewith.

This collection of information is required by 37 CFR 1.137(b). The information is required to obtain or retain a benefit by the public which is to file (and by the USPTO to process) an application. Confidentiality is governed by 35 U.S.C. 122 and 37 CFR 1.11 and 1.14. This collection is estimated to take 1.0 hour to complete, including gathering, preparing, and submitting the completed application form to the USPTO. Time will vary depending upon the individual case. Any comments on the amount of time you require to complete this form and/or suggestions for reducing this burden, should be sent to the Chief Information Officer, U.S. Patent and Trademark Office, U.S. Department of Commerce, P.O. Box 1450, Alexandria, VA 22313-1450. DO NOT SEND FEES OR COMPLETED FORMS TO THIS ADDRESS. **SEND TO: Mail Stop Petition, Commissioner for Patents, P.O. Box 1450, Alexandria, VA 22313-1450.**

If you need assistance in completing the form, call 1-800-PTO-9199 and select option 2.

Under the Paperwork Reduction Act of 1995, no persons are required to respond to a collection of information unless it displays a valid OMB control number.

3. Terminal disclaimer with disclaimer fee

☐ Since this utility/plant application was filed on or after June 8, 1995, no terminal disclaimer is required.

☐ A terminal disclaimer (and disclaimer fee (37 CFR 1.20(d)) of $ _____ for a small entity or $ _____ for other than a small entity) disclaiming the required period of time is enclosed herewith (see PTO/SB/63).

4. STATEMENT: The entire delay in filing the required reply from the due date for the required reply until the filing of a grantable petition under 37 CFR 1.137(b) was unintentional. [NOTE: The United States Patent and Trademark Office may require additional information if there is a question as to whether either the abandonment or the delay in filing a petition under 37 CFR 1.137(b) was unintentional (MPEP 711.03(c), subsections (III)(C) and (D)).]

WARNING:

Petitioner/applicant is cautioned to avoid submitting personal information in documents filed in a patent application that may contribute to identity theft. Personal information such as social security numbers, bank account numbers, or credit card numbers (other than a check or credit card authorization form PTO-2038 submitted for payment purposes) is never required by the USPTO to support a petition or an application. If this type of personal information is included in documents submitted to the USPTO, petitioners/applicants should consider redacting such personal information from the documents before submitting them to the USPTO. Petitioner/applicant is advised that the record of a patent application is available to the public after publication of the application (unless a non-publication request in compliance with 37 CFR 1.213(a) is made in the application) or issuance of a patent. Furthermore, the record from an abandoned application may also be available to the public if the application is referenced in a published application or an issued patent (see 37 CFR 1.14). Checks and credit card authorization forms PTO-2038 submitted for payment purposes are not retained in the application file and therefore are not publicly available.

Signature	Date
Typed or printed name	Registration Number, if applicable
Address	Telephone Number
Address	

Enclosures:
- ☐ Fee Payment
- ☐ Reply
- ☐ Terminal Disclaimer Form
- ☐ Additional sheets containing statements establishing unintentional delay
- ☐ Other: _____

CERTIFICATE OF MAILING OR TRANSMISSION [37 CFR 1.8(a)]

I hereby certify that this correspondence is being:

☐ Deposited with the United States Postal Service on the date shown below with sufficient postage as first class mail in an envelope addressed to: Mail Stop Petition, Commissioner for Patents, P. O. Box 1450, Alexandria, VA 22313-1450.

☐ Transmitted by facsimile on the date shown below to the United States Patent and Trademark Office at (571) 273-8300.

Date	Signature
	Typed or printed name of person signing certificate

Privacy Act Statement

The **Privacy Act of 1974 (P.L. 93-579)** requires that you be given certain information in connection with your submission of the attached form related to a patent application or patent. Accordingly, pursuant to the requirements of the Act, please be advised that: (1) the general authority for the collection of this information is 35 U.S.C. 2(b)(2); (2) furnishing of the information solicited is voluntary; and (3) the principal purpose for which the information is used by the U.S. Patent and Trademark Office is to process and/or examine your submission related to a patent application or patent. If you do not furnish the requested information, the U.S. Patent and Trademark Office may not be able to process and/or examine your submission, which may result in termination of proceedings or abandonment of the application or expiration of the patent.

The information provided by you in this form will be subject to the following routine uses:

1. The information on this form will be treated confidentially to the extent allowed under the Freedom of Information Act (5 U.S.C. 552) and the Privacy Act (5 U.S.C 552a). Records from this system of records may be disclosed to the Department of Justice to determine whether disclosure of these records is required by the Freedom of Information Act.
2. A record from this system of records may be disclosed, as a routine use, in the course of presenting evidence to a court, magistrate, or administrative tribunal, including disclosures to opposing counsel in the course of settlement negotiations.
3. A record in this system of records may be disclosed, as a routine use, to a Member of Congress submitting a request involving an individual, to whom the record pertains, when the individual has requested assistance from the Member with respect to the subject matter of the record.
4. A record in this system of records may be disclosed, as a routine use, to a contractor of the Agency having need for the information in order to perform a contract. Recipients of information shall be required to comply with the requirements of the Privacy Act of 1974, as amended, pursuant to 5 U.S.C. 552a(m).
5. A record related to an International Application filed under the Patent Cooperation Treaty in this system of records may be disclosed, as a routine use, to the International Bureau of the World Intellectual Property Organization, pursuant to the Patent Cooperation Treaty.
6. A record in this system of records may be disclosed, as a routine use, to another federal agency for purposes of National Security review (35 U.S.C. 181) and for review pursuant to the Atomic Energy Act (42 U.S.C. 218(c)).
7. A record from this system of records may be disclosed, as a routine use, to the Administrator, General Services, or his/her designee, during an inspection of records conducted by GSA as part of that agency's responsibility to recommend improvements in records management practices and programs, under authority of 44 U.S.C. 2904 and 2906. Such disclosure shall be made in accordance with the GSA regulations governing inspection of records for this purpose, and any other relevant (*i.e.*, GSA or Commerce) directive. Such disclosure shall not be used to make determinations about individuals.
8. A record from this system of records may be disclosed, as a routine use, to the public after either publication of the application pursuant to 35 U.S.C. 122(b) or issuance of a patent pursuant to 35 U.S.C. 151. Further, a record may be disclosed, subject to the limitations of 37 CFR 1.14, as a routine use, to the public if the record was filed in an application which became abandoned or in which the proceedings were terminated and which application is referenced by either a published application, an application open to public inspection or an issued patent.
9. A record from this system of records may be disclosed, as a routine use, to a Federal, State, or local law enforcement agency, if the USPTO becomes aware of a violation or potential violation of law or regulation.

UNITED STATES PATENT AND TRADEMARK OFFICE

H·D

UNITED STATES DEPARTMENT OF COMMERCE
United States Patent and Trademark Office
Address: COMMISSIONER FOR PATENTS
P.O. Box 1450
Alexandria, Virginia 22313-1450
www.uspto.gov

APPLICATION NO.	FILING DATE	FIRST NAMED INVENTOR	ATTORNEY DOCKET NO.	CONFIRMATION NO.
11/804,087	05/17/2007	Diran Varzhabedian		6970

7590 09/12/2007

Diran Varzhabedian
601 Cove Road
Stamford, CT 06902-6125

EXAMINER
AMRANY, ADI

ART UNIT	PAPER NUMBER
2836	

MAIL DATE	DELIVERY MODE
09/12/2007	PAPER

Please find below and/or attached an Office communication concerning this application or proceeding.

The time period for reply, if any, is set in the attached communication.

Office Action Summary	Application No.	Applicant(s)	
	11/804,087	VARZHABEDIAN, DIRAN	
	Examiner	Art Unit	
	Adi Amrany	2836	

-- The MAILING DATE of this communication appears on the cover sheet with the correspondence address --

Period for Reply

A SHORTENED STATUTORY PERIOD FOR REPLY IS SET TO EXPIRE 3 MONTH(S) OR THIRTY (30) DAYS, WHICHEVER IS LONGER, FROM THE MAILING DATE OF THIS COMMUNICATION.

- Extensions of time may be available under the provisions of 37 CFR 1.136(a). In no event, however, may a reply be timely filed after SIX (6) MONTHS from the mailing date of this communication.
- If NO period for reply is specified above, the maximum statutory period will apply and will expire SIX (6) MONTHS from the mailing date of this communication.
- Failure to reply within the set or extended period for reply will, by statute, cause the application to become ABANDONED (35 U.S.C. § 133). Any reply received by the Office later than three months after the mailing date of this communication, even if timely filed, may reduce any earned patent term adjustment. See 37 CFR 1.704(b).

Status

1)☒ Responsive to communication(s) filed on *17 May 2007*.

2a)☐ This action is **FINAL**. 2b)☒ This action is non-final.

3)☐ Since this application is in condition for allowance except for formal matters, prosecution as to the merits is closed in accordance with the practice under *Ex parte Quayle*, 1935 C.D. 11, 453 O.G. 213.

Disposition of Claims

4)☒ Claim(s) *21-40* is/are pending in the application.

4a) Of the above claim(s) _____ is/are withdrawn from consideration.

5)☐ Claim(s) _____ is/are allowed.

6)☒ Claim(s) *21-40* is/are rejected.

7)☐ Claim(s) _____ is/are objected to.

8)☐ Claim(s) _____ are subject to restriction and/or election requirement.

Application Papers

9)☐ The specification is objected to by the Examiner.

10)☒ The drawing(s) filed on *17 May 2007* is/are: a)☐ accepted or b)☒ objected to by the Examiner.

Applicant may not request that any objection to the drawing(s) be held in abeyance. See 37 CFR 1.85(a).

Replacement drawing sheet(s) including the correction is required if the drawing(s) is objected to. See 37 CFR 1.121(d).

11)☐ The oath or declaration is objected to by the Examiner. Note the attached Office Action or form PTO-152.

Priority under 35 U.S.C. § 119

12)☐ Acknowledgment is made of a claim for foreign priority under 35 U.S.C. § 119(a)-(d) or (f).

a)☐ All b)☐ Some * c)☐ None of:

1.☐ Certified copies of the priority documents have been received.

2.☐ Certified copies of the priority documents have been received in Application No. _____.

3.☐ Copies of the certified copies of the priority documents have been received in this National Stage application from the International Bureau (PCT Rule 17.2(a)).

* See the attached detailed Office action for a list of the certified copies not received.

Attachment(s)

1) ☒ Notice of References Cited (PTO-892)

2) ☐ Notice of Draftsperson's Patent Drawing Review (PTO-948)

3) ☒ Information Disclosure Statement(s) (PTO/SB/08) Paper No(s)/Mail Date *5/17/05*.

4) ☐ Interview Summary (PTO-413) Paper No(s)/Mail Date. _____ .

5) ☐ Notice of Informal Patent Application

6) ☐ Other: _____.

DETAILED ACTION

Drawings

1. The drawings are objected to under 37 CFR 1.83(a) because they fail to show the complete backup power system, including the connection to one and only one of the plurality of household or structural appliances as described in the specification. The present drawings do not indicate an output terminal in order to supply power to the appliances. Any structural detail that is essential for a proper understanding of the disclosed invention should be shown in the drawing. MPEP § 608.02(d). Corrected drawing sheets in compliance with 37 CFR 1.121(d) are required in reply to the Office action to avoid abandonment of the application. Any amended replacement drawing sheet should include all of the figures appearing on the immediate prior version of the sheet, even if only one figure is being amended. The figure or figure number of an amended drawing should not be labeled as "amended." If a drawing figure is to be canceled, the appropriate figure must be removed from the replacement sheet, and where necessary, the remaining figures must be renumbered and appropriate changes made to the brief description of the several views of the drawings for consistency. Additional replacement sheets may be necessary to show the renumbering of the remaining figures. Each drawing sheet submitted after the filing date of an application must be labeled in the top margin as either "Replacement Sheet" or "New Sheet" pursuant to 37 CFR 1.121(d). If the changes are not accepted by the examiner, the applicant will be notified and informed of any required corrective action in the next Office action. The objection to the drawings will not be held in abeyance.

Claim Objections

2. Claim 22-36 are objected to because they are apparatus claims that depend from what appears to be a method claim. Claim 21 I contains functional language but no recitation of any physical components, and therefore, can be interpreted as a method claim. It is also noted that claim 21 is similar to the preamble of cancelled claim 1.

3. Claims 35-36 are objected to because they depend directly from claim 33, yet contain limitations directed to the window comparator, which is a limitation of claim 34.

4. Claim 38; it is unclear how an appliance can have a "termination." For the purpose of the art rejection of claim 18, termination will be interpreted as an off relay that prevents the flow of current to an appliance.

Claim Rejections - 35 USC § 112

5. The following is a quotation of the second paragraph of 35 U.S.C. 112:

> The specification shall conclude with one or more claims particularly pointing out and distinctly claiming the subject matter which the applicant regards as his invention.

6. Claims 25 is rejected under 35 U.S.C. 112, second paragraph, as being indefinite for failing to particularly point out and distinctly claim the subject matter which applicant regards as the invention. The recitation of claim 25 is a false statement, as the appliances also receive power from the source of primary power during normal operations.

7. Claims 14-15 are rejected because there is no basis for the limitation of a "window comparator." The specification only recites the use of a current comparator (item 42).

Appropriate correction is required.

Claim Rejections - 35 USC § 103

8. The following is a quotation of 35 U.S.C. 103(a) which forms the basis for all obviousness rejections set forth in this Office action:

> (a) A patent may not be obtained though the invention is not identically disclosed or described as set forth in section 102 of this title, if the differences between the subject matter sought to be patented and the prior art are such that the subject matter as a whole would have been obvious at the time the invention was made to a person having ordinary skill in the art to which said subject matter pertains. Patentability shall not be negatived by the manner in which the invention was made.

33, & 37-40

9. Claims 21- are rejected under 35 U.S.C. 103(a) as being unpatentable over Paik (US 2006/0072262).

With respect to claim 21, Paik discloses a backup power system (fig 1; par 30) for supplying electrical power in the event of primary power failure to one and only one of a plurality of household appliances (par 45, lines 1-9; table 1) at a time (par 32, 45-48), said plurality of appliances each receiving power in a predetermined sequence under the direction of an automated control system (par 48).

Paik discloses that delayable loads are supplied with power on at a time, such that power from one (furnace) is removed before power is supplied to the next (well-pump). Paik also discloses that non-delayable loads are simultaneously supplied with power while the controller cycles through the other delayable loads. One skilled in the art would recognize that the Paik system may be configured such that there are no non-delayable loads (par 15, lines 15-30), since it has been held that rearranging parts of an invention involves only routine skill in the art. *In re Japikse*, 86 USPQ 70 (CCPA 1950).

With respect to claim 22, Paik further discloses:

at least one battery (par 30, lines 17-20; par 37, lines 5-9);

an inverter (par 30, lines 17-20);

voltage sensing circuitry for measuring the DC voltage level of said battery (fig 3, step 302; par 43, lines 7-11; par 64);

current sensing circuitry for detecting and measuring each individual current flow to each appliance (par 55);

a battery charger (par 37 and 40, lines 8-9);

a visual display of the charge level of said battery (item 120; par 35, 64)

a power interface comprising a plurality of relays such that each one and only one of said relays is electrically controlling one and only one of said appliances (items 113A-D; par 35); and

control and timing circuitry implementing a predetermined operation of said backup power system (item 114; par 38).

With respect to claim 23, Paik discloses that the process of supplying power to said appliances applies a minimum power sufficient only for said appliance, minimizies an electrical stress on said system and battery, minimizes a discharge rate of said battery, avoids a peak power demand on said system to supply all appliances simultaneously, and maximizes an operational lifetime of said battery (abstract, par 15, 31-32 and 42).

With respect to claim 24, Paik discloses said source of backup power is supplied to each said appliance for a respective individual programmable dwell time (par 47).

With respect to claim 25, Paik discloses that each of the appliances receives power only in the event of failure of said source of primary power (par 48), but does not expressly disclose that the failure of primary power is detected by the battery charger.

Paik discloses that the controller detects a failure of primary power (item 114; par 35, lines 10-15). At the time of the invention by applicant, it would have been obvious to one skilled in the art to reassign the power supply detection duties of the Paik controller to the battery charger since it has been held that the rearranging of parts of an invention involves only routine skill in the art. *Id.*

With respect to claim 26, Paik discloses the source of primary power is supplied to each of the appliances in a sequential order determined by a preprogrammed selection matrix (item 114; par 38), wherein said matrix electrically selects one relay at a time, and energizes said relay upon failure of said source of primary power (par 48), such that one and only one of said appliances may receive said backup power at any given moment in time.

With respect to claim 27, Paik discloses the backup power is generated by said DC/AC converter from said battery (par 30) and is consistent with standard primary power (par 34; 120/240v at 50 Hz).

With respect to claim 28, Paik discloses that upon detecting a return to normal of said source of primary power, the backup power system commands: a cessation of further supply of said backup power, a commencement of re-charging of said battery, and a de-energization of said selected relays, thereby reconnecting said source of primary power to each and every one of said appliances simultaneously (par 21, 30). It would be obvious to one skilled in the art that upon detecting a loss of power, the Paik system would return to a normally operating state by taking the power-loss steps in the

reverse order. And as discussed above, it would be obvious to assign the primary power source detection to the battery charger instead of the Paik controller.

With respect to claim 29, Paik discloses the charge level of said battery is continuously monitored and displayed (par 41, 63).

With respect to claim 30, it would be obvious to one skilled in the art that the Paik display (item 120) may comprise one of an analog voltmeter, an LED display or an LCD display since these device are art recognized equivalents for providing electrical data to a user.

With respect to claim 31, Paik discloses providing a batteries depleted signal (par 41, 63). Paik does not expressly disclose the recipient of the signal. It would be obvious to one skilled in the art that the signal would be transmitted to either the battery or the inverter, since these two components would be in the best position to prevent further discharge of the battery.

With respect to claim 32, it would be obvious to one skilled in the art that the Paik display may comprise two colors of LEDs, since it has been held that discovering an optimum value of result effective variable (number of colors) involves only routine skill in the art. *In re Boesch*, 617 F.2d 272, 205 USPQ 215 (CCPA 1980).

NJ With respect to claim ~~13~~ 33, Paik discloses the apparatus necessary to complete the recited method for a backup power system comprising the steps of:

commencing an operational sequence in accordance with a power delivery schedule upon sensing a loss of primary power voltage (par 46);

supplying backup power to a first (furnace) of said one and only one of a plurality of appliances for a first predetermined dwell time (par 47-48) in accordance with said power delivery schedule;

disconnecting said backup power to said first appliance after said dwell time has expired, and supplying said backup power to a second (well-pump) appliance;

sequentially supplying backup power to each and every appliance in accordance with said power delivery schedule (table 1; par 48);

monitoring a load current for each appliance (par 55);

determining if each load current is within predetermined parameters (par 55);

omitting certain non-critical appliances from power delivery in accordance with said power delivery schedule (par 48);

omitting certain appliances if their load current demand is less than a predetermined level (par 48; "asked" for power);

determining that a short-circuit does not exist (par 51);

terminating supply of backup power to an appliance which draws excessive current (par 53);

removal of said appliance drawing excessive current from said power delivery schedule (par 53);

ensuring that said one and only one of a plurality of appliances is requiring power (par 55); and

automatically adjusting the power delivery schedule in response to battery power remaining, length of power outage, time of year, structural heating or cooling demands, water supply (par 43).

With respect to claim 37, Paik discloses a backup power system having a power interface (items 113A-D) comprised of a plurality of individually selectable relays, each relay in monogamous electrical communication with one and only one of a plurality of appliances (fig 1), whereby said power interface selects at most one and only one relay to a backup power mode at a time so as to provide backup power to said at most one and only one relay and a corresponding said one and only one of a plurality of appliances (par 30-32, 48). As discussed above, it would be obvious to one skilled in the art to configure the Paik system without only delayable loads.

With respect to claim 38, Paik discloses the power interface serves as terminations for the appliances, for both said primary and backup power (par 38).

With respect to claims 39-40, Paik discloses a circuit protection device (circuit breaker) to protect the battery from short circuits (item 127; par 37). Paik discloses that the relay (127) is controlled based on the sensed line voltages, including the load lines.

10. Claims 34-36 are rejected under 35 U.S.C. 103(a) as being unpatentable over Paik in view of Choudhury (US 6,169,669).

With respect to claim 34, Choudhury discloses a backup power system (fig 3), wherein the load current is measured by inputting the load current to a current transformer (item 343, col. 4, lines 24-44), outputting an AC voltage from said transformer, inputting said transformer output into an amplifier (item 343), rectifying an

output of said amplifier, and inputting the DC voltage to a window comparator (item 360; ports ADC7, ADC8).

At the time of the invention by applicant, it would have been obvious to duplicate the Choudhury sense amplifier into two amplifying components (transformer and amplifier), since it has been held that mere duplication of the essential working parts of a device involves only routine skill in the art. *St. Regis Paper Co. v. Bemis Co.*, 193 USPQ 8 (CCPQ 1977). Paik and Choudhury are analogous because they are from the same field of endeavor, namely backup power supplies. At the time of the invention by applicant, it would have been obvious to one skilled in the art to combine the backup power system disclosed in Paik with the load current detection disclosed in Choudhury in order to convert the analog output current into a voltage input for a logic circuit.

With respect to claims 35-36, Choudhury discloses that stable and accurate voltage references are used and that the limits of the comparator are pre-settable (col. 8, lines 40-43). Further, it would be obvious to one skilled in the art that the references voltages input to a comparator are stable and pre-settable in accordance with a custom backup power system installation. Otherwise, the comparator would compare the sensed voltage against random and constantly changing references.

Conclusion

11. The prior art made of record and not relied upon is considered pertinent to applicant's disclosure. Applicant is requested to review the cited references in their entirety. See also Dailey (6,680,5470).

Any inquiry concerning this communication or earlier communications from the examiner should be directed to Adi Amrany whose telephone number is (571) 272-0415. The examiner can normally be reached on Mon-Thurs, from 10am-5pm.

If attempts to reach the examiner by telephone are unsuccessful, the examiner's supervisor, Michael Sherry can be reached on (571) 272-2800 x36. The fax phone number for the organization where this application or proceeding is assigned is 571-273-8300.

Information regarding the status of an application may be obtained from the Patent Application Information Retrieval (PAIR) system. Status information for published applications may be obtained from either Private PAIR or Public PAIR. Status information for unpublished applications is available through Private PAIR only. For more information about the PAIR system, see http://pair-direct.uspto.gov. Should you have questions on access to the Private PAIR system, contact the Electronic Business Center (EBC) at 866-217-9197 (toll-free). If you would like assistance from a USPTO Customer Service Representative or access to the automated information system, call 800-786-9199 (IN USA OR CANADA) or 571-272-1000.

AA

9/1/07

MICHAEL SHERRY
SUPERVISORY PATENT EXAMINER

UNITED STATES PATENT AND TRADEMARK OFFICE

UNITED STATES DEPARTMENT OF COMMERCE
United States Patent and Trademark Office
Address: COMMISSIONER FOR PATENTS
P.O. Box 1450
Alexandria, Virginia 22313-1450
www.uspto.gov

APPLICATION NO.	FILING DATE	FIRST NAMED INVENTOR	ATTORNEY DOCKET NO.	CONFIRMATION NO.
11/804,087	05/17/2007	Diran Varzhabedian		6970

7590 05/02/2008

Diran Varzhabedian
601 Cove Road
Stamford, CT 06902-6125

EXAMINER
AMRANY, ADI

ART UNIT	PAPER NUMBER
2836	

MAIL DATE	DELIVERY MODE
05/02/2008	PAPER

Please find below and/or attached an Office communication concerning this application or proceeding.

The time period for reply, if any, is set in the attached communication.

UNITED STATES PATENT AND TRADEMARK OFFICE

Commissioner for Patents
United States Patent and Trademark Office
P.O. Box 1450
Alexandria, VA 22313-1450
www.uspto.gov

Diran Varzhabedian
601 Cove Road
Stamford, CT 06902-6125

In re Application of: Diran Varzhabedian Serial No.: 11/804,087 Filed: May 17, 2007 Title: BACKUP POWER SYSTEM FOR ELECTRICAL APPLICANCES	DECISION ON PETITION TO WITHDRAW HOLDING OF ABANDONMENT

This is a decision on the petition to re-mail Office action that was filed, via facsimile transmission, on April 16, 2008. This petition was filed in response to a conversation that inventor/petitioner Mr. Varzhabedian had with Quality Assurance Specialist Edward Westin on April 15, 2008. However, since that conversation, a decision dismissing a petition to withdraw the holding of abandonment was mailed to applicant on April 15, 2008 and a Notice of Abandonment was mailed to applicant on April 24, 2008. Accordingly the petition to re-mail Office action that was filed on April 16, 2008, is being treated as a renewed petition to withdraw the holding of abandonment.

The renewed petition is **GRANTED**.

A miscellaneous communication from the applicant was filed on March 12, 2008. The miscellaneous communication indicated that applicant received a call from the examiner on March 11, 2008 stating that an Office action was sent to applicant on September 12, 2007. The miscellaneous communication then stated that the applicant never received the Office action of September 12, 2007. The miscellaneous communication of March 12, 2008 was treated as a petition to withdraw the holding of abandonment. The decision of April 15, 2008 dismissed the petition for failing to explain the manner in which petitioner receives mail from the USPTO, maintains files for patent matters, and treats mail received for such patent matters.

As indicated in the decision of April 15, 2008, a grantable petition should include a specific statement concerning the affirmative steps taken regarding the receipt of mail and the safeguarding of correspondence from the USPTO. The decision also indicates that while petitioner, as a pro-se applicant, is not required to keep a record showing receipt of all incoming mail, he must include a statement that a search of the location in which the correspondence from

the USPTO would have been kept was made and that the search indicates that the Office action was not received.

The renewed petition filed April 16, 2008 states that all documentation pertaining to the patent application is put into jacketed folder in chronological order and that the jacketed folder is kept in a specific drawer of a file cabinet. It also states that address to which the Office action of September 12, 2007 was sent is the petitioner's residence.

During a conversation with Quality Assurance Specialist Edward Westin on April 28, 2008, petitioner also stated that he carefully checks the mail every day, separates USPTO correspondence from the other mail and places it in the aforementioned jacketed folder. Petitioner further stated he carefully searched the jacketed folder and that the search indicated there was no correspondence from the USPTO between a petition decision mailed on August 24, 2007 and a Notice of Publication of Application which petitioner received shortly after its mailing date of October 4, 2007.

The statements made in the petition filed on April 16, 2008 together with the statements made by petitioner to the Quality Assurance Specialist on April 28, 2008 are accepted as overcoming the strong presumption that the Office action of September 12, 2007 was properly mailed to the address of record.

Accordingly, the Notice of Abandonment mailed April 24, 2008 is hereby **VACATED** and the holding of abandonment is withdrawn. Since a copy of the Office action of September 12, 2007 was mailed to applicant with the petition decision of April 15, 2008, a new 3 month shortened statutory period for response is hereby set to run from the mail date of that petition decision. The 3 month shortened statutory period will expire on July 15, 2008.

Any inquiries regarding this decision should be directed to Edward Westin at (571) 272-1638.

Janice A. Falcone

Janice A. Falcone, Director
Technology Center 2800
Semiconductors, Electrical and Optical
Systems and Components

UNITED STATES PATENT AND TRADEMARK OFFICE

COMMISSIONER FOR PATENTS
UNITED STATES PATENT AND TRADEMARK OFFICE
P.O. BOX 1450
ALEXANDRIA, VA 22313-1450
www.uspto.gov

Mark J. Pandiscio
Pandiscio & Pandiscio, P.C.
470 Totten Pond Road
Waltham MA 02451-1914

MAILED

MAY 15 2009

OFFICE OF PETITIONS

Applicant: Rose et al.
Appl. No.: 11/804,091
Filing Date: May 17, 2007
Title: BATTERY ADAPTER
Attorney Docket: GLOBALTECH-1
Pub. No.: US 2008/0090452 A1
Pub. Date: April 17, 2008

This is a decision on the request for a corrected patent application publication under 37 CFR 1.221(b), received on June 20, 2008, for the above-identified application.

The request is DISMISSED.

Applicant requests that the application be republished because an inventor was listed as "Miller" rather than "Murray".

37 CFR 1.221 (b) is applicable "only when the Office makes a material mistake which is apparent from Office records.... Any request for a corrected publication or revised patent application publication other than provided as provided in paragraph (a) of this section must be filed within two months from the date of the patent application publication. This period is not extendable." A material mistake must affect the public's ability to appreciate the technical disclosure of the patent application publication, to determine the scope of the patent application publication, or to determine the scope of the provisional rights that an applicant may seek to enforce upon issuance of a patent. [1]

The error in the name on the front page of the publication may be an Office error, but it is a not material Office error under 37 CFR 1.221. The typographical error in the inventor's name does not affect the understanding of the application. The mistake does not affect the public's ability to appreciate the technical disclosure of the patent application publication, or determine the scope of the patent application publication or determine the scope of the provisional rights that an applicant may seek to enforce upon issuance of a patent.

[1] Changes to Implement Eighteen-Month Publication of Patent Applications, 65 FR 57023, 57038 (Sept. 20, 2000), 1239, Off. Gaz. Pat. Office Notices 63, 75 (Oct. 10, 2000) (final rule).

On June 18, 2007 and January 8, 2008, Filing Receipts were mailed by the Office, which listed the inventor's name as "Miller". To avoid this type of problem in the future, applicant's representative should make request a corrected filing receipt prior export of the application to the publisher which is approximately 10 weeks before the projected publication date, which is listed on the Filing Receipt and/or prior to publication of the application. The request for a Corrected Filing Feceipt was not received in sufficient time for the publication.

The applicant is advised that a "request for republication of an application previously published" may be filed under 37 CFR 1.221(a). Such a request for republication "must include a copy of the application compliance with the Office's electronic filing system requirements and be accompanied by the publication fee set forth in § 1.18(d) and the processing fee set forth in § 1.17(i)." If the request for republication does not comply with the electronic filing system requirements, the republication will not take place and the publication fee set forth in § 1.18(d) will be refunded. The processing fee will be retained.

A guide for filing a request for a Pre-Grant Publication, such as a request for republication, may be found on the link below:

http://www.uspto.gov/ebc/portal/tutorials.htm

Any request for republication under 37 CFR 1.221(a), must be submitted via the EFS system, as a "Pre-Grant Publication" and questions or request for reconsideration of the decision, should be addressed as follows:

By mail to: Mail Stop PGPUB
Commissioner for Patents
P.O. Box 1450
Alexandria, Va. 22313-1450

Inquiries relating to this matter may be directed to Michael Cygan at (571) 272-7700, or to the undersigned at (571) 272-7709.

Mark Polutta
Senior Legal Advisor
Office of Patent Legal Administration
Office of the Deputy Commissioner
for Patent Examination Policy

UNITED STATES PATENT AND TRADEMARK OFFICE

UNITED STATES DEPARTMENT OF COMMERCE
United States Patent and Trademark Office
Address: COMMISSIONER FOR PATENTS
P.O. Box 1450
Alexandria, Virginia 22313-1450
www.uspto.gov

APPLICATION NO.	FILING DATE	FIRST NAMED INVENTOR	ATTORNEY DOCKET NO.	CONFIRMATION NO.
11/804,101	05/17/2007	Nam-Gi Kim	1235-431	7687

7590 12/03/2008
THE FARRELL LAW FIRM, P.C.
333 EARLE OVINGTON BOULEVARD
SUITE 701
UNIONDALE, NY 11553

EXAMINER
BOST, DWAYNE D

ART UNIT	PAPER NUMBER
2617	

MAIL DATE	DELIVERY MODE
12/03/2008	PAPER

DECISION GRANTING PETITION UNDER 37 CFR 1.138(d)

The declaration of express abandonment is recognized

This is in response to the petition under 37 CFR 1.138(d), requesting for a refund of any previously paid search fee and excess claims fee in the above-identified application.

The petition is granted.

The express abandonment is recognized. Any previously paid search fee and excess claims fee are hereby refunded.

Telephone inquiries should be directed to the Office of Data Management at (571) 272-4200.

Nimi Farmer

Patent Publication Branch
Office of Data Management

Refund Ref:
12/04/2008 NFARMER 0000165358

CHECK Refund Total: $950.00

Adjustment date: 12/04/2008 NFARMER
05/18/2007 EAYALEW1 00000094 11804101
02 FC:1111 -500.00 OP
04 FC:1201 -200.00 OP
05 FC:1202 -250.00 OP

FORM PET651G (Rev. 08/07)

UNITED STATES PATENT AND TRADEMARK OFFICE

COMMISSIONER FOR PATENTS
UNITED STATES PATENT AND TRADEMARK OFFICE
P.O. BOX 1450
ALEXANDRIA, VA 22313-1450
WWW.USPTO.GOV

Paper No.

HEWLETT PACKARD COMPANY
P O BOX 272400, 3404 E. HARMONY ROAD
INTELLECTUAL PROPERTY ADMINISTRATION
FORT COLLINS CO 80527-2400

COPY MAILED
AUG 12 2008

In re Application of	:	
Steven F. Manzi et al.	:	
Application No. 11/804,110	:	DECISION ON PETITION
Filed: May 17, 2007	:	PURSUANT TO
Attorney Docket Number:	:	37 C.F.R. § 1.137(B)
200507262	:	
Title: STANDALONE OPEN FRAME	:	

This is a decision on the petition pursuant to 37 C.F.R. § 1.137(b), filed April 10, 2008, to revive the above-identified application.

This petition pursuant to 37 C.F.R. § 1.137(b) is **GRANTED**.

The above-identified application became abandoned for failure to reply in a timely manner to the Notice to File Corrected Application Papers (notice), mailed June 19, 2007, which set a shortened statutory period for reply of two months. No response was received, and no extensions of time under the provisions of 37 C.F.R. § 1.136(a) were requested. Accordingly, the above-identified application became abandoned on August 20, 2007. A notice of abandonment was mailed on March 5, 2008.

A grantable petition pursuant to 37 C.F.R. § 1.137(b) must be accompanied by:

(1) The reply required to the outstanding Office

action or notice, unless previously filed;

(2) The petition fee as set forth in 37 C.F.R. § 1.17(m);

(3) A statement that the entire delay in filing the required reply from the due date for the reply until the filing of a grantable petition pursuant to this paragraph was unintentional. The Commissioner may require additional information where there is a question whether the delay was unintentional, and;

(4) Any terminal disclaimer (and fee as set forth in 37 C.F.R. § 1.20(d)) required pursuant to paragraph (d) of this section.

37 C.F.R. § 1.137(b)(3) requires a statement that the entire delay in filing the required reply from the due date for the reply until the filing of a grantable petition pursuant to 37 C.F.R. § 1.137(b) was unintentional. Since the statement contained in this petition varies from the language required by 37 C.F.R. § 1.137(b)(3), the statement contained in this petition is being construed as the statement required by 37 C.F.R. § 1.137(b)(3) and Petitioner must notify the Office if this is not a correct interpretation of the statement contained in this petition.

With this petition, Petitioner has submitted the petition fee, replacement drawings, and a statement that is being construed as the proper statement of unintentional delay. A terminal disclaimer is not required. As such, the first three requirements of Rule 1.137(b) have been met. The fourth requirement is not applicable.

The Office of Patent Application Processing (OPAP) will be notified of this decision so that the application may receive further processing.

Petitioner may find it beneficial to view Private PAIR within a fortnight of the present decision to ensure that the revival has been acknowledged by OPAP in response to this decision. It is noted that all inquiries with regard to any failure of that change in status should be directed to OPAP where that change of status must be effected - **the Office of Petitions cannot effectuate a change of status**.

The general phone number for OPAP is 571-272-4000. Telephone inquiries regarding *this decision* should be directed to the undersigned at (571) 272-3225[1].

/Paul Shanoski/
Paul Shanoski
Senior Attorney
Office of Petitions

---

1 Petitioner will note that all practice before the Office should be in writing, and the action of the Office will be based exclusively on the written record in the Office. See 37 C.F.R. § 1.2. As such, Petitioner is reminded that no telephone discussion may be controlling or considered authority for Petitioner's further action(s).

UNITED STATES PATENT AND TRADEMARK OFFICE

UNITED STATES DEPARTMENT OF COMMERCE
United States Patent and Trademark Office
Address: COMMISSIONER FOR PATENTS
P.O. Box 1450
Alexandria, Virginia 22313-1450
www.uspto.gov

APPLICATION NO.	FILING DATE	FIRST NAMED INVENTOR	ATTORNEY DOCKET NO.	CONFIRMATION NO.
11/804,127	05/17/2007	Won Joo Park	1398-048	8244

7590 09/04/2009
THE FARRELL LAW FIRM, LLP
290 Broadhollow Road
Suite 210E
Melville, NY 11747

EXAMINER
VU, KIEU D

ART UNIT	PAPER NUMBER
2173	

MAIL DATE	DELIVERY MODE
09/04/2009	PAPER

DECISION GRANTING PETITION UNDER 37 CFR 1.138(d)

The declaration of express abandonment is recognized

This is in response to the petition under 37 CFR 1.138(d), requesting for a refund of any previously paid search fee and excess claims fee in the above-identified application.

The petition is granted.

The express abandonment is recognized. Any previously paid search fee and excess claims fee are hereby refunded.

Telephone inquiries should be directed to the Office of Data Management at (571) 272-4200.

Betty Powell

Patent Publication Branch
Office of Data Management

Repln. Ref: 09/08/2009 BPOWELL 0016101700
DMN:504053 Name/Number:11804127
FC: 9204 $500.00 CR

Adjustment date: 09/08/2009 BPOWELL
05/21/2007 MMARZII 00000004 11804127
02 FC:1111 -500.00 OP

FORM PET651G (Rev. 08/07)

Recip. Ref: 09/08/2009 BPOWELL 0016101700
DAA:504053 Name/Number:11804127
FC: 9204 $500.00 CR

UNITED STATES PATENT AND TRADEMARK OFFICE

Commissioner for Patents
United States Patent and Trademark Office
P.O. Box 1450
Alexandria, VA 22313-1450
www.uspto.gov

IP Group of DLA Piper US LLP
One Liberty Place
1650 Market Street, Suite 4900
Philadelphia, PA 19103

COPY MAILED

MAY 09 2008

In re Application of	:	
Jacob R.S. Andersen	:	
Application No. 11/804,129	:	DECISION ON PETITION
Filed: May 17, 2007	:	TO WITHDRAW
Attorney Docket No. DCL-06-1076R	:	FROM RECORD
	:	

This is a decision on the Request to Withdraw as attorney or agent of record under 37 C.F.R § 1.36(b), filed January 24, 2008.

The request is **APPROVED**.

A grantable request to withdraw as attorney/agent of record must be signed by every attorney/agent seeking to withdraw or contain a clear indication that one attorney is signing on behalf of another/others. A request to withdraw will not be approved unless at least 30 (thirty) days would remain between the date of approval and the later of the expiration date of a time to file a response or the expiration date of the maximum time period which can be extended under 37 C.F.R. § 1.136(a).

The request was signed by T. Daniel Christenbury on behalf of all attorneys/agents of record. All attorneys/agents have been withdrawn.

The correspondence address of record has been changed and the new correspondence address is the address indicated below.

Telephone inquiries concerning this decision should be directed to Kimberly Inabinet at 571-272-4618.

Kimberly Inabinet
Petitions Examiner
Office of Petitions

cc: Mr. Jacob R. S. Andersen
Dracco Company Limited
Unit 1201-05
12/F, Stelux House
No. 698 Prince Edward Road East
San Po Kong, Howloon
Hong Kong

UNITED STATES PATENT AND TRADEMARK OFFICE

UNITED STATES DEPARTMENT OF COMMERCE
United States Patent and Trademark Office
Address: COMMISSIONER FOR PATENTS
P.O. Box 1450
Alexandria, Virginia 22313-1450
www.uspto.gov

APPLICATION NUMBER	FILING OR 371(C) DATE	FIRST NAMED APPLICANT	ATTY. DOCKET NO./TITLE
11/804,129	05/17/2007	Jacob R. S. Andersen	DCL-06-1076R

CONFIRMATION NO. 8246

POWER OF ATTORNEY NOTICE

35811
IP GROUP OF DLA PIPER US LLP
ONE LIBERTY PLACE
1650 MARKET ST, SUITE 4900
PHILADELPHIA, PA 19103

OC000000029821405

Date Mailed: 05/08/2008

NOTICE REGARDING CHANGE OF POWER OF ATTORNEY

This is in response to the Power of Attorney filed 01/24/2008.

- The withdrawal as attorney in this application has been accepted. Future correspondence will be mailed to the new address of record. 37 CFR 1.33.

/kainabinet/

Office of Data Management, Application Assistance Unit (571) 272-4000, or (571) 272-4200, or 1-888-786-0101

UNITED STATES PATENT AND TRADEMARK OFFICE

UNITED STATES DEPARTMENT OF COMMERCE
United States Patent and Trademark Office
Address: COMMISSIONER FOR PATENTS
P.O. Box 1450
Alexandria, Virginia 22313-1450
www.uspto.gov

APPLICATION NO.	FILING DATE	FIRST NAMED INVENTOR	ATTORNEY DOCKET NO.	CONFIRMATION NO.
11/804,139	05/17/2007	Pei Shan Tu	CMO.0058US (94785US)	8148

21906 7590 08/12/2009
TROP, PRUNER & HU, P.C.
1616 S. VOSS ROAD, SUITE 750
HOUSTON, TX 77057-2631

EXAMINER
WONG, TINA MEI SENG

ART UNIT	PAPER NUMBER
2874	

MAIL DATE	DELIVERY MODE
08/12/2009	PAPER

Please find below and/or attached an Office communication concerning this application or proceeding.

The time period for reply, if any, is set in the attached communication.

UNITED STATES PATENT AND TRADEMARK OFFICE

Commissioner for Patents
United States Patent and Trademark Office
P.O. Box 1450
Alexandria, VA 22313-1450
www.uspto.gov

TROP PRUNER & HU, PC
1616 S. VOSS ROAD, SUITE 750
HOUSTON, TX 77057-2631

In re Application of
Pei Shan Tu, et al.
Serial No.: 11/804,139
Filed: May 17, 2007
For: REDUCING COLOR SHIFT

DECISION ON PETITION
ACCEPTANCE OF COLOR DRAWINGS

This is a decision on the petition under 37 C.F.R. § 1.84(a)(2), filed May 17, 2007, requesting acceptance of the color drawings filed on May 17, 2007.

The petition requests that the color drawings, noted as Figures 2A-2G be accepted in lieu of black and white drawings. The Petitioner has provided three additional sets of the originally filed color drawings with the instant request for reconsideration. The original sets of color drawings were filed in the Patent and Trademark Office on May 17, 2007 and were part of the original artifact folder.

A grantable petition under 37 C.F.R. §1.84(a)(2) must be accompanied by a fee set forth under 37 C.F.R. § 1.17(h), 3 (three) set of the color drawings, and the specification must contain, or be amended to contain, the following language as the first paragraph in that portion of the specification relating to the brief description of the drawings:

> *"The patent or application file contains at least one drawing executed in color. Copies of this patent or patent application publication with color drawing(s) will be provided by the Office upon request and payment of the necessary fee."*

A review of the file record finds three sets of color drawings dated May 17, 2007 (i.e., via the artifact record and the SCORE Placeholder Sheet), the necessary language as the first paragraph of the brief description of the drawings section of the specification (which already present in the original specification filed May 17, 2007), and the necessary fee, the requirements of 37 C.F.R. §1.84(a)(2) have been met.

Accordingly, the petition is **GRANTED**.

The application file will be forwarded to the Office of Publications for appropriate action in due course.

/Uyen-Chau N. Le/
Supervisory Patent Examiner, Art Unit 2874

UNITED STATES PATENT AND TRADEMARK OFFICE

UNITED STATES DEPARTMENT OF COMMERCE
United States Patent and Trademark Office
Address: COMMISSIONER FOR PATENTS
P.O. Box 1450
Alexandria, Virginia 22313-1450
www.uspto.gov

Siemens Corporation
Intellectual Property Department
170 Wood Avenue South
Iselin, NJ 08830

Mail Date: 05/12/2010

Applicant	: Gary B. Merrill	: DECISION ON REQUEST FOR
Patent Number	: 7648605	: RECALCULATION of PATENT
Issue Date	: 01/19/2010	: TERM ADJUSTMENT IN VIEW
Application No	: 11/804,140	: OF WYETH AND NOTICE OF INTENT TO
Filed	: 05/17/2007	: ISSUE CERTIFICATE OF CORRECTION
		:

The Request for Recalculation is **GRANTED** to the extent indicated.

The patent term adjustment has been determined to be **266** days. The USPTO will *sua sponte* issue a certificate of correction reflecting the amount of PTA days determined by the recalculation.

Prior to the issuance of the certificate of correction, the USPTO will afford patentee an opportunity to be heard and request reconsideration. Accordingly, patentee has **one month or thirty (30) days**, whichever is longer, to file a request for reconsideration of this patent term adjustment calculation. See 35 U.S.C. 154(b)(3)(B)(ii) and 37 CFR 1.322(a)(4). No extensions of time will be granted under 37 CFR 1.136.

Patentee should use document code PET.OP if electronically filing a request for reconsideration of this patent term adjustment calculation. The patentee must also include the information required by 37 CFR 1.705(b)(2) and the fee required by 37 CFR 1.18(e). If patentee does not file a timely request for reconsideration of this patent term adjustment calculation including the information required by 37 CFR 1.705(b)(2) and the fee required by 37 CFR 1.18(e), the USPTO will issue a certificate of correction reflecting the PTA determination noted above.

Patentee should be aware that in order to preserve the right to review in the United States District Court for the District of Columbia of the USPTO patent term adjustment determination, patentee must ensure that he or she also take the steps required under 35 U.S.C. 154(b)(4)(A) in a timely manner. Nothing in the request for recalculation should be construed as providing an alternative time frame for commencing a civil action under 35 U.S.C. 154(b)(4)(A).

Any questions concerning this decision should be directed to the Office of Patent Legal Administration at 571-272-7702.

UNITED STATES PATENT AND TRADEMARK OFFICE

Commissioner for Patents
United States Patent and Trademark Office
P.O. Box 1450
Alexandria, VA 22313-1450
www.uspto.gov

Ward & Olivo
Suite 300
382 Springfield Avenue
Summit, NJ 07901

COPY MAILED

JUN 2 3 2008

OFFICE OF PETITIONS

In re Application of	:	
Allison Flom	:	
Application No. 11/804,159	:	DECISION ON PETITION
Filed: May 16, 2007	:	
Attorney Docket No. 351-001	:	

This is a decision on the petition under the unintentional provisions of 37 CFR 1.137(b), filed April 28, 2008, to revive the above-identified application.

The petition is **GRANTED**.

The application became abandoned for failure to reply in a timely manner to the Notice to File Missing Parts of Non-Provisional Application (Notice), mailed June 18, 2007. The Notice set a period for reply of two (2) months from the mail date of the Notice. No extensions of time under the provisions of 37 CFR 1.136(a) were obtained. Accordingly, the application became abandoned on August 19, 2007. A Notice of Abandonment was mailed on March 4, 2008.

The petition satisfies the requirements of 37 CFR 1.137(b) in that petitioner has supplied (1) the reply in the form of a signed oath or declaration, with the required $65.00 surcharge fee, (2) the petition fee of $770.00, and (3) a proper statement of unintentional delay. Accordingly, the oath and declaration is accepted as being unintentionally delayed.

It is not apparent whether the person signing the statement of unintentional delay was in a position to have firsthand or direct knowledge of the facts and circumstances of the delay at issue. Nevertheless, such statement is being treated as having been made as the result of a reasonable inquiry into the facts and circumstances of such delay. See 37 CFR 10.18(b) and Changes to Patent Practice and Procedure; Final Rule Notice, 62 Fed. Reg. 53131, 53178 (October 10, 1997), 1203 Off. Gaz. Pat. Office 63, 103 (October 21, 1997). In the event that such an inquiry has not been made, petitioner must make such an inquiry. If such inquiry results in the discovery that it is not correct that the entire delay in filing the required reply from the due date for the reply until the filing of a grantable petition pursuant to 37 CFR 1.137(b) was unintentional, petitioner must notify the Office.

Telephone inquiries concerning this decision should be directed to Kimberly Inabinet at (571) 272-4618.

This application is being referred to the Office of Patent Application Processing for appropriate action in the normal course of business on the reply received April 28, 2008.

Carl Friedman
Petitions Examiner
Office of Petitions

UNITED STATES PATENT AND TRADEMARK OFFICE

UNITED STATES DEPARTMENT OF COMMERCE
United States Patent and Trademark Office
Address: COMMISSIONER FOR PATENTS
P.O. Box 1450
Alexandria, Virginia 22313-1450
www.uspto.gov

APPLICATION NUMBER	FILING OR 371(C) DATE	FIRST NAMED APPLICANT	ATTY. DOCKET NO./TITLE
11/804,159	05/16/2007	Allison Flom	351-001

CONFIRMATION NO. 8339

POA ACCEPTANCE LETTER

27776
WARD & OLIVO
SUITE 300
382 SPRINGFIELD AVENUE
SUMMIT, NJ 07901

OC000000030535581

Date Mailed: 06/18/2008

NOTICE OF ACCEPTANCE OF POWER OF ATTORNEY

This is in response to the Power of Attorney filed 04/28/2008.

The Power of Attorney in this application is accepted. Correspondence in this application will be mailed to the above address as provided by 37 CFR 1.33.

/kainabinet/

Office of Data Management, Application Assistance Unit (571) 272-4000, or (571) 272-4200, or 1-888-786-0101

UNITED STATES PATENT AND TRADEMARK OFFICE

UNITED STATES DEPARTMENT OF COMMERCE
United States Patent and Trademark Office
Address: COMMISSIONER FOR PATENTS
P.O. Box 1450
Alexandria, Virginia 22313-1450
www.uspto.gov

TEXAS INSTRUMENTS INCORPORATED
P O BOX 655474, M/S 3999
DALLAS, TX 75265

Mail Date: 05/10/2010

Applicant	: Prema Palaniappan	: DECISION ON REQUEST FOR
Patent Number	: 7635914	: RECALCULATION of PATENT
Issue Date	: 12/22/2009	: TERM ADJUSTMENT IN VIEW
Application No	: 11/804,237	: OF WYETH AND NOTICE OF INTENT TO
Filed	: 05/17/2007	: ISSUE CERTIFICATE OF CORRECTION
		:

The Request for Recalculation is **GRANTED** to the extent indicated.

The patent term adjustment has been determined to be **74** days. The USPTO will *sua sponte* issue a certificate of correction reflecting the amount of PTA days determined by the recalculation.

Prior to the issuance of the certificate of correction, the USPTO will afford patentee an opportunity to be heard and request reconsideration. Accordingly, patentee has **one month or thirty (30) days**, whichever is longer, to file a request for reconsideration of this patent term adjustment calculation. See 35 U.S.C. 154(b)(3)(B)(ii) and 37 CFR 1.322(a)(4). No extensions of time will be granted under 37 CFR 1.136.

Patentee should use document code PET.OP if electronically filing a request for reconsideration of this patent term adjustment calculation. The patentee must also include the information required by 37 CFR 1.705(b)(2) and the fee required by 37 CFR 1.18(e). If patentee does not file a timely request for reconsideration of this patent term adjustment calculation including the information required by 37 CFR 1.705(b)(2) and the fee required by 37 CFR 1.18(e), the USPTO will issue a certificate of correction reflecting the PTA determination noted above.

Patentee should be aware that in order to preserve the right to review in the United States District Court for the District of Columbia of the USPTO patent term adjustment determination, patentee must ensure that he or she also take the steps required under 35 U.S.C. 154(b)(4)(A) in a timely manner. Nothing in the request for recalculation should be construed as providing an alternative time frame for commencing a civil action under 35 U.S.C. 154(b)(4)(A).

Any questions concerning this decision should be directed to the Office of Patent Legal Administration at 571-272-7702.

UNITED STATES PATENT AND TRADEMARK OFFICE

Commissioner for Patents
United States Patent and Trademark Office
P.O. Box 1450
Alexandria, VA 22313-1450
www.uspto.gov

MICHAEL BEST & FRIEDRICH LLP
CASIMIR F. LASKA
100 EAST WISCONSIN AVENUE, SUITE 3300
MILWAUKEE, WI 53202-4108

COPY MAILED

MAR 06 2008

OFFICE OF PETITIONS

In re Application of :
Greg Davis :
Application No. 11/804,253 :
Filed: May 17, 2007 :
Attorney Docket No. 039189-9162-01 :

DECISION GRANTING PETITION

This is a decision on the petition, filed July 23, 2007, requesting that the above-identified application be accorded a filing date of May 17, 2007, rather than the presently accorded date of May 18, 2007. The petition is properly treated as a petition under 37 CFR 1.10(d).

Petitioner alleges that the application was deposited in Express Mail Service on May 17, 2007. Petitioner has provided a copy of the Express Mail label receipt no. EV 916323493 US, which shows that the date-in was not entered. In view thereof, petitioner has provided a copy of the results from the USPS Express Mail Track and Confirm database, which shows that the package at issue was accepted at the Milwaukee, WI, USPS at 7:43 pm on May 17, 2007. Applicants are alleging that the date of mailing shown on the Express Mail label is a USPS error and the correct date of mailing pursuant to 37 CFR 1.10 is May 17, 2007. The above-noted Express Mail number appears on the originally filed application papers of this file.

In view of the evidence submitted, this application is entitled to a filing date of May 17, 2007 and has been so accorded.

In view of the above, the petition is **GRANTED**.

This application file is being referred to the Office of Initial Patent Examination (OIPE) for correction of the filing date to May 17, 2007 and for issuance of a corrected filing receipt.

Telephone inquiries relating to this decision should be directed Irvin Dingle at (571) 272-3210. Telephone inquiries related to OIPE processing should be directed to their hotline at (571) 272-4000.

David Bucci
Petition Examiner
Office of Petitions

UNITED STATES PATENT AND TRADEMARK OFFICE

UNITED STATES DEPARTMENT OF COMMERCE
United States Patent and Trademark Office
Address: COMMISSIONER FOR PATENTS
P.O. Box 1450
Alexandria, Virginia 22313-1450
www.uspto.gov

APPLICATION NO.	FILING DATE	FIRST NAMED INVENTOR	ATTORNEY DOCKET NO.	CONFIRMATION NO.
11/804,264	05/17/2007	Jason J. Li	2007P04969US	8958

24252 7590 10/02/2008
OSRAM SYLVANIA INC
100 ENDICOTT STREET
DANVERS, MA 01923

EXAMINER
MCMILLAN, JESSICA L

ART UNIT	PAPER NUMBER
2875	

MAIL DATE	DELIVERY MODE
10/02/2008	PAPER

Please find below and/or attached an Office communication concerning this application or proceeding.

The time period for reply, if any, is set in the attached communication.

UNITED STATES PATENT AND TRADEMARK OFFICE

Commissioner for Patents
United States Patent and Trademark Office
P.O. Box 1450
Alexandria, VA 22313-1450
www.uspto.gov

Osram Sylvania, Inc.
100 Endicott Street
Danvers, MA 01923

In re Application:	
J. LI, et al.	
Application No. 11/804264	Decision on Petition
Filing Date 05/17/2007	
Attny Docket No. 2007P04969US	

This is a decision on a petition under 37 CFR 1.181 filed February 26, 2008, requesting that the Information Disclosure Statement submitted with the application be considered by the examiner.

In the Office Action dated 02/15/2008, the Examiner refused entry of the IDS for failure to comply with the provisions of 37CFR 1.97, 1.98 and MPEP 609 because of "the improper date format of the cited references". The references were cited using a MM/YY format.

Applicant argues that there is no requirement that the date be in a MM/YY format, and that the form does not have the space for a MM/YYYY format. As evidence, the Applicant submits a copy of the PTO-1449 (rev 2-32) showing that there is no space for a MM/YYYY format. Applicant further submits as evidence a PTO/SB/08A (07-08). Form PTO SB/08A replaces Form PTO-1449. Clearly PTO/SB/08A has the space for a MM/YYYY format.

In light of these facts, it is determined that the Applicant should use the most current forms available to them for any submission to the USPTO. The petition is **denied**. However, in the interest of customer service, the examiner will be directed to list the references on a PTO-892.

If there are any questions, you may contact Sandy O'Shea, S.P.E. Art Unit 2875 at 571-272-2378.

Janice A. Falcone

Janice A. Falcone, Director
Technology Center 2800
Semiconductors, Electrical and Optical
Systems and Components

UNITED STATES PATENT AND TRADEMARK OFFICE

UNITED STATES DEPARTMENT OF COMMERCE
United States Patent and Trademark Office
Address: COMMISSIONER FOR PATENTS
P.O. Box 1450
Alexandria, Virginia 22313-1450
www.uspto.gov

APPLICATION NO.	FILING DATE	FIRST NAMED INVENTOR	ATTORNEY DOCKET NO.	CONFIRMATION NO.
11/804,264	05/17/2007	Jason J. Li	2007P04969US	8958

24252 7590 10/02/2008
OSRAM SYLVANIA INC
100 ENDICOTT STREET
DANVERS, MA 01923

EXAMINER
MCMILLAN, JESSICA L

ART UNIT	PAPER NUMBER
2875	

MAIL DATE	DELIVERY MODE
10/02/2008	PAPER

Please find below and/or attached an Office communication concerning this application or proceeding.

The time period for reply, if any, is set in the attached communication.

UNITED STATES PATENT AND TRADEMARK OFFICE

Commissioner for Patents
United States Patent and Trademark Office
P.O. Box 1450
Alexandria, VA 22313-1450
www.uspto.gov

Osram Sylvania, Inc.
100 Endicott Street
Danvers, MA 01923

In re Application:	
J. LI, et al.	
Application No. 11/804264	Decision on Petition
Filing Date 05/17/2007	
Attny Docket No. 2007P04969US	

This is a decision on a petition under 37 CFR 1.181 filed February 26, 2008, requesting that the Information Disclosure Statement submitted with the application be considered by the examiner.

In the Office Action dated 02/15/2008, the Examiner refused entry of the IDS for failure to comply with the provisions of 37CFR 1.97, 1.98 and MPEP 609 because of "the improper date format of the cited references". The references were cited using a MM/YY format.

Applicant argues that there is no requirement that the date be in a MM/YY format, and that the form does not have the space for a MM/YYYY format. As evidence, the Applicant submits a copy of the PTO-1449 (rev 2-32) showing that there is no space for a MM/YYYY format. Applicant further submits as evidence a PTO/SB/08A (07-08). Form PTO SB/08A replaces Form PTO-1449. Clearly PTO/SB/08A has the space for a MM/YYYY format.

In light of these facts, it is determined that the Applicant should use the most current forms available to them for any submission to the USPTO. The petition is **denied**. However, in the interest of customer service, the examiner will be directed to list the references on a PTO-892.

If there are any questions, you may contact Sandy O'Shea, S.P.E. Art Unit 2875 at 571-272-2378.

Janice A. Falcone

Janice A. Falcone, Director
Technology Center 2800
Semiconductors, Electrical and Optical
Systems and Components

2007P04969US PATENT

IN THE UNITED STATES PATENT AND TRADEMARK OFFICE

OIPE IAP22 FEB 26 2008 PATENT & TRADEMARK OFFICE

Applicant: J. Li, et al.

Serial No.: 11/804,264 Art Unit: 2875

Filed: 05/17/2007 Examiner: McMillan, Jessica L

For: FACETED PAR LAMP6

Mail Stop PETITION
Commissioner for Patents
Box 1450
Alexandria, VA 22313-1450

Sir:

CERTIFICATE OF MAILING UNDER 37 CFR 1.8
I hereby certify that this correspondence is being deposited with the United States Postal Service as first class mail in an envelope addressed to: Commissioner of Patents, Box 1450, Alexandria, VA 22313-1450, on

Feb 29, 2008

William H. McNeill

PETITION UNDER 37 CFR 1.181

Your Petitioner hereby petitions the Commissioner for Patents (or a delegated authority under 37 CFR 1.181(g)) to invoke his supervisory authority in the subject application to instruct the Examiner to enter and consider the Information Disclosure Statement submitted with the application.

The facts are as follows:

The instant application was filed on 05/17/2007 and included an Information Disclosure Statement (IDS) based on Form PTO-1449 (Rev.2-32) copy attached as Exhibit A. Two U.S. patents were listed and the issue dates were listed in the form MM/YY, which was standard nomenclature for this form (there being no room for additional date information).

In an Office Action dated 02/15/2008, the Examiner has refused entry of the IDS for failure to comply with the provisions of 37 CFR 1.97, 1.98 and MPEP § 609 because of "...the improper date format of the cited references. The format used makes the year of the reference unclear." A copy of Page 2 of the Office Action is attached as Exhibit B.

37 CFR 1.97 and 1.98 require an IDS to list a date of issue of the cited references. No date format is specified.

MPEP § 609 does not deal with Form PTO-1449 but, rather, with Form PTO/SB08a. As a matter of fact, the copy of Form PTO/SB/08a which is included in the MPEP (copy attached as Exhibit C) shows a date format of mm/dd/yyyy, which format is incorrect and which will not be accepted in the Form PTO/Sb/08a which is downloadable from the PTO web cite. That form requires a yyyy-mm-dd format.

The Transmittal Letter accompanying the application authorizes the Commissioner to charge any additional fees to Deposit Account No. 15-0685, (copy attached as Exhibit D).

Wherefore, Applicant prays:

For the Commissioner to instruct the Examiner to enter the IDS filed with the application as of the date of filing of the application.

To instruct the Examiner to consider the references on the merits.

To instruct the Examiner as to the fact that a review of the front page of any of the listed patents will immediately make clear the entire filing date, for any person incapable of ascertaining the date from the information supplied.

To instruct the Examiner as to the correctness of the date format MM/YY when used with FORM PTO-1449.

To instruct the Examiner that a date format of MM/YY is understandable by any person with a modicum of experience with FORM PTO-1449.

To instruct the Examiner that 37 CFR 1.97 and 1.98 do not specify a date format.

To instruct the Examiner that MPEP § 609 relates specifically to FORM PTOSb/08a and that the date format shown therein is not acceptable on the currently downloadable version of that form, as it exists on the PTO Forms data base.

And

To take any other action necessary.

Respectfully submitted,

William H. McNeill
Reg. No. 24,426
For:
OSRAM SYLVANIA Inc.
100 Endicott Street
Danvers, MA 01923

Tel.: (321) 782-2000
Fax.: (321) 783-2000

OIPE IAP22
FEB 26 2008
PATENT & TRADEMARK OFFICE

Sheet 1 of 1

FORM PTO-1449 (Rev. 2-32) U.S. DEPARTMENT OF COMMERCE PATENT AND TRADEMARK OFFICE	ATTY. DOCKET NO. 2007P04969US	SERIAL NO.
INFORMATION DISCLOSURE STATEMENT BY APPLICANT (Use several sheets if necessary)	APPLICANT Li, et al.	
	FILING DATE	GROUP

U.S. PATENT DOCUMENTS

EXAMINER INITIAL		DOCUMENT NUMBER	DATE	NAME	CLASS	SUBCLASS	FILING DATE IF APPROPRIATE
		5 2 7 2 4 0 8	12/93	Levin, et al.	313	113	
		6 0 8 6 2 2 7	07/00	O'Connell, et al.	362	299	

FOREIGN PATENT DOCUMENTS

		DOCUMENT NUMBER	DATE	COUNTRY	CLASS	SUBCLASS	TRANSLATION YES	TRANSLATION NO

OTHER DOCUMENTS (Including Author, Title, Date, Pertinent Pages, Etc.)

EXAMINER	DATE CONSIDERED

EXAMINER: Initial if citation considered, whether or not citation is in conformance with MPEP 609; Draw line through citation if not in conformance and not considered. Include copy of this form with next communication to applicant.

Exhibit A

DETAILED ACTION

Information Disclosure Statement

The information disclosure statement filed 17 May 2007 fails to comply with the provisions of 37 CFR 1.97, 1.98 and MPEP § 609 because of the improper date format of the cited references. The format used makes the year of the reference unclear. It has been placed in the application file, but the information referred to therein has not been considered as to the merits. Applicant is advised that the date of any re-submission of any item of information contained in this information disclosure statement or the submission of any missing element(s) will be the date of submission for purposes of determining compliance with the requirements based on the time of filing the statement, including all certification requirements for statements under 37 CFR 1.97(e). See MPEP § 609.05(a).

Claim Rejections - 35 USC § 103

The following is a quotation of 35 U.S.C. 103(a) which forms the basis for all obviousness rejections set forth in this Office action:

> (a) A patent may not be obtained though the invention is not identically disclosed or described as set forth in section 102 of this title, if the differences between the subject matter sought to be patented and the prior art are such that the subject matter as a whole would have been obvious at the time the invention was made to a person having ordinary skill in the art to which said subject matter pertains. Patentability shall not be negatived by the manner in which the invention was made.

Claim 1 is rejected under 35 U.S.C. 103(a) as being unpatentable over O'Connell et al. (US 6,086,227) in view of Gagnon et al. (US 6,078,128).

Regarding claim 1, O'Connell et al. disclose a PAR lamp comprising: a body (14) having an internal reflector surface (18) disposed about a longitudinal axis; a cavity (see claim 6 of O'Connell et al.) at one end of said body; an arc discharge tube (12), a cover

Exhibit B

OIPE IAP22
FEB 26 2008
PATENT & TRADEMARK OFFICE

**>

PTO/SB/08A (07-06)
Approved for use through 09/30/2006. OMB 0651-0031
U.S. Patent and Trademark Office; U.S. DEPARTMENT OF COMMERCE
Under the Paperwork Reduction Act of 1995, no persons are required to respond to a collection of information unless it contains a valid OMB control number.

Substitute for form 1449/PTO

INFORMATION DISCLOSURE STATEMENT BY APPLICANT

(Use as many sheets as necessary)

Sheet | | of | |

Complete if Known	
Application Number	07/123,456
Filing Date	01-02-91
First Named Inventor	C. Smith
Art Unit	3615
Examiner Name	John Doe
Attorney Docket Number	56789

U. S. PATENT DOCUMENTS

Examiner Initials*	Cite No.[1]	Document Number Number-Kind Code[2] (if known)	Publication Date MM-DD-YYYY	Name of Patentee or Applicant of Cited Document	Pages, Columns, Lines, Where Relevant Passages or Relevant Figures Appear
JD		US- 3703445	11-07-1972	Tew	All
JD		US- 3994000	08-09-1975	Reitter	All Figures
JD		US- 3694509	01-26-1971	Sarich	Pages 2 -10
JD		US- 4325777	05-22-1990	Wolfe	All
		US-			
		US-			
		US-			
		US-			
		US-			
		US-			
		US-			
		US-			
		US-			
		US-			
		US-			
		US-			
		US-			
		US-			
		US-			

FOREIGN PATENT DOCUMENTS

Examiner Initials*	Cite No.[1]	Foreign Patent Document Country Code[3]-Number[4]-Kind Code[5] (if known)	Publication Date MM-DD-YYYY	Name of Patentee or Applicant of Cited Document	Pages, Columns, Lines, Where Relevant Passages Or Relevant Figures Appear	T[6]
		~~FR, 338540~~	~~06-1975~~			
JD		DE, 1137729	06-1965			
JD		EP, 9141	08-1979			
JD		WO, 80/01871	09-1980			
JD		JP, 50-3106	11-1979			

Examiner Signature	/John Doe/	Date Considered	09/30/1991

*EXAMINER: Initial if reference considered, whether or not citation is in conformance with MPEP 609. Draw line through citation if not in conformance and not considered. Include copy of this form with next communication to applicant. [1] Applicant's unique citation designation number (optional). [2] See Kinds Codes of USPTO Patent Documents at www.uspto.gov or MPEP 901.04. [3] Enter Office that issued the document, by the two-letter code (WIPO Standard ST.3). [4] For Japanese patent documents, the indication of the year of the reign of the Emperor must precede the serial number of the patent document. [5] Kind of document by the appropriate symbols as indicated on the document under WIPO Standard ST.16 if possible. [6] Applicant is to place a check mark here if English language Translation is attached.

This collection of information is required by 37 CFR 1.97 and 1.98. The information is required to obtain or retain a benefit by the public which is to file (and by the USPTO to process) an application. Confidentiality is governed by 35 U.S.C. 122 and 37 CFR 1.14. This collection is estimated to take 2 hours to complete, including gathering, preparing, and submitting the completed application form to the USPTO. Time will vary depending upon the individual case. Any comments on the amount of time you require to complete this form and/or suggestions for reducing this burden, should be sent to the Chief Information Officer, U.S. Patent and Trademark Office, P.O. Box 1450, Alexandria, VA 22313-1450. DO NOT SEND FEES OR COMPLETED FORMS TO THIS ADDRESS. SEND TO: Commissioner for Patents, P.O. Box 1450, Alexandria, VA 22313-1450.

If you need assistance in completing the form, call 1-800-PTO-9199 (1-800-786-9199) and select option 2.

Exhibit C

PATENT APPLICATION TRANSMITTAL LETTER

ATTORNEY'S DOCKET NO.2007P04969US

TO THE COMMISSIONER FOR PATENTS:

Transmitted herewith for filing is the patent application of Jason J. Li, Harold Rothwell, Jr., David M. Hrubowchak, for FACETED PAR LAMP.

OIPE IAP22
FEB 26 2008
PATENT & TRADEMARK OFFICE

EB143742983US

Enclosed are:
Authorization to charge Deposit Account
Specification,7 pages, 4 claims
Declaration and Power of Attorney
Assignment and Recordation Form, PTO-1595
2 sheets of drawings;
PTO 1449, 2 references
Post Card Receipt

CLAIMS AS FILED

TOTAL CLAIMS:	4
INDEPENDENT CLAIMS:	1
FILING FEE:	$300.00
UTILITY SEARCH FEE:	$500.00
UTILTIY EXAMINATION FEE:	$200.00
RECORDING OF ASSIGNMENT:	$ 40.00

Please charge Deposit Account No. 15-0685 in the amount of $ 1,040.00

The Commissioner is hereby authorized to charge any additional fees which may be required at any time during the prosecution of this application without specific authorization, or to credit any overpayment to Deposit Account No.15-0685.

This sheet is provided in triplicate.

EXPRESS MAIL CERTIFICATE

"Express Mail" label number EB143 742 983US

Date of Deposit May 17, 2007

I hereby certify that the above described papers and fees are being deposited with the United States Postal Service "Express Mail Post Office to Addressee" service under 37 CFR 1.10 on the date indicated above and addressed to the Commissioner of Patents and Trademarks, Washington, D.C. 20231.

Please send correspondence to the address associated with Customer Number 24252.

William H. McNeill

(Signature of person mailing paper or fee)

William H. McNeill
OSRAM SYLVANIA Inc.
100 Endicott Street
Danvers, MA 01923

Tel.No. (321) 544-5292

Exhibit D

UNITED STATES PATENT AND TRADEMARK OFFICE

Commissioner for Patents
United States Patent and Trademark Office
P.O. Box 1450
Alexandria, VA 22313-1450
www.uspto.gov

COPY MAILED

AUG 1 0 2007

OFFICE OF PETITIONS

ABELMAN, FRAYNE & SCHWAB
666 THIRD AVENUE, 10TH FLOOR
NEW YORK, NY 10017

In re Application of :
Matthiesen, et al. :
Application No. 11/804,268 : ON PETITION
Filed: NO FILING DATE ACCORDED :
Attorney Docket No.: 208.232 :

This is a decision on the petition under 37 CFR 1.57 filed July 17, 2007, requesting that the above-identified application be accorded a filing date of May 16, 2007.

The petition is **dismissed**.

The application was filed on May 16, 2007. On June 19, 2007, the Office of Initial Patent Examination mailed a Notice of Incomplete Non-Provisional Application stating that the application had not been accorded a filing date because drawings were missing but appeared to be necessary to understand the invention claimed. The notice allowed a non-extendable period for reply of two-months from its mailing date.

The present petition was filed on July 17, 2007, and was accompanied by a copy of the specification of prior-filed German application serial number DE10 2006 0002326. Petitioner maintains that the drawing figure accompanied the application papers on May 16, 2007. A review of the application file did not reveal a drawing figure among the original application papers. The petition was not accompanied by *prima facie* evidence, i.e., an Office date stamped postcard, that a drawing figure accompanied the original application papers. The evidence is not convincing that the drawing figure accompanied the original application papers. In the alternative, petitioner maintains that the application is entitled to a filing date because the omitted drawing is contained in a prior-filed foreign application to which the subject non-provisional application claims priority.

37 CFR 1.57 states, in pertinent part, that:

> (a) Subject to the conditions and requirements of this paragraph, if all or a portion of the specification or drawing(s) is inadvertently omitted from an application, but the application contains a claim under § 1.55 for priority of a prior-filed foreign application, or a claim under § 1.78 for the benefit of a prior-filed provisional, nonprovisional, or international application, that was present on the filing date of the application, and the inadvertently omitted portion of the specification or drawing(s) is completely contained in the prior-filed application, the claim under § 1.55 or § 1.78 shall also be considered an incorporation by reference of the prior- filed application as to the inadvertently omitted portion of the specification or drawing(s).
>
> (1) The application must be amended to include the inadvertently omitted portion of the specification or drawing(s) within any time period set by the Office, but in no case later than the close of prosecution as defined by § 1.114(b), or abandonment of the application, whichever occurs earlier. The applicant is also required to:

> (i) Supply a copy of the prior-filed application, except where the prior- filed application is an application filed under 35 U.S.C. 111;
>
> (ii) Supply an English language translation of any prior-filed application that is in a language other than English; and
>
> (iii) Identify where the inadvertently omitted portion of the specification or drawings can be found in the prior-filed application.
>
> ...
>
> (3) If an application is not otherwise entitled to a filing date under § 1.53(b), the amendment must be by way of a petition pursuant to this paragraph, accompanied by the fee set forth in § 1.17(f).

The petition fails to comply with 37 CFR 1.57(a).

Petitioner has not provided an amendment to include the omitted drawing figure as required 37 CFR 1.57(a). Any renewed petition filed must be accompanied by an amendment requesting entry of the inadvertently omitted drawing figure.

Any request for reconsideration must be filed within TWO MONTHS of the date of this decision in order to be considered timely. This period may not be extended pursuant to 37 CFR 1.136.

Further correspondence with respect to this matter should be addressed as follows:

By mail: Mail Stop Petition
Commissioner for Patents
PO Box 1450
Alexandria, VA 22313-1450

By FAX: (571) 273-8300
Attn: Office of Petitions

By hand: Customer Service Window
Mail Stop Petitions
Randolph Building
401 Dulany Street
Alexandria, VA 22314

Telephone inquiries concerning this matter may be directed to Kenya A. McLaughlin, Petitions Attorney, at (571) 272-3222.

Charles A. Pearson
Director
Office of Petitions

UNITED STATES PATENT AND TRADEMARK OFFICE

Commissioner for Patents
United States Patent and Trademark Office
P.O. Box 1450
Alexandria, VA 22313-1450
www.uspto.gov

COPY MAILED

OCT 22 2007

OFFICE OF PETITIONS

ABELMAN, FRAYNE & SCHWAB
666 THIRD AVENUE, 10TH FLOOR
NEW YORK, NY 10017

In re Application of :
Matthiesen, et al. :
Application No. 11/804,268 : ON PETITION
Filed: May 16, 2007 :
Attorney Docket No.: 208.232 :

This is a decision on the renewed petition under 37 CFR 1.57 filed September 7, 2007.

The renewed petition is **granted.**

The application was filed on May 16, 2007. On June 19, 2007, the Office of Patent Application Processing mailed a Notice of Incomplete Non-Provisional Application stating that the application had not been accorded a filing date because drawings were missing but appeared to be necessary to understand the invention claimed. The notice allowed a non-extendable period for reply of two-months from its mailing date.

A petition under 37 CFR 1.57 was first filed on July 17, 2007, and was accompanied by a copy of the specification of prior-filed German application serial number DE10 2006 0002326. The petition was dismissed by a decision mailed August 10, 2007.

The instant renewed petition was filed on September 7, 2007, and is accompanied by an amendment requesting entry of the omitted drawings found in prior-filed German application serial number DE10 2006 0002326. A copy of the drawings was filed with the instant renewed petition under 37 CFR 1.57.

Effective September 21, 2004, 37 CFR 1.57 allows a priority claim to a prior-filed application to be considered an incorporation by reference statement allowing for the incorporation of the prior filed application as to inadvertently omitted portion of the specification or drawings. When using 37 CFR 1.57, applicant's are required to amend the application to include the inadvertently omitted material, and supply a copy of the prior-filed application and identify where the inadvertently omitted portion of the drawing can be found in the prior-filed application.

It is noted that 37 CFR 1.57(a)(3) indicates that if the application is not otherwise entitled to a filing date under 37 CFR 1.53(b), the amendment must be by way of the petition. This application was determined not to be entitled to a filing date. Accordingly, a petition is required to amend the application pursuant to 37 CFR 1.57. The petition is granted, accordingly.

The application will be accorded a filing date of May 16, 2007.

The application is being returned to the Office of Patent Application Processing for further processing with a filing date of May 16, 2007. The Office of Patent Application Processing will issue a corrected filing receipt.

Telephone inquiries concerning this matter may be directed to Kenya A. McLaughlin at (571) 272-3222.

Charles Pearson
Director
Office of Petitions

UNITED STATES PATENT AND TRADEMARK OFFICE

UNITED STATES DEPARTMENT OF COMMERCE
United States Patent and Trademark Office
Address: COMMISSIONER FOR PATENTS
P.O. Box 1450
Alexandria, Virginia 22313-1450
www.uspto.gov

Byrne Poh LLP
11 Broadway, Ste 865
New York, NY 10004

Mail Date: 04/21/2010

Applicant	: Adolf Brunner	: DECISION ON REQUEST FOR
Patent Number	: 7651419	: RECALCULATION of PATENT
Issue Date	: 01/26/2010	: TERM ADJUSTMENT IN VIEW
Appliction No	: 11/804,280	: OF WYETH AND NOTICE OF INTENT TO
Filed	: 05/16/2007	: ISSUE CERTIFICATE OF CORRECTION
		:

The Request for Recalculation is **GRANTED** to the extent indicated.

The patent term adjustment has been determined to be **421** days. The USPTO will *sua sponte* issue a certificate of correction reflecting the amount of PTA days determined by the recalculation.

Prior to the issuance of the certificate of correction, the USPTO will afford patentee an opportunity to be heard and request reconsideration. Accordingly, patentee has **one month or thirty (30) days**, whichever is longer, to file a request for reconsideration of this patent term adjustment calculation. See 35 U.S.C. 154(b)(3)(B)(ii) and 37 CFR 1.322(a)(4). No extensions of time will be granted under 37 CFR 1.136.

Patentee should use document code PET.OP if electronically filing a request for reconsideration of this patent term adjustment calculation. The patentee must also include the information required by 37 CFR 1.705(b)(2) and the fee required by 37 CFR 1.18(e). If patentee does not file a timely request for reconsideration of this patent term adjustment calculation including the information required by 37 CFR 1.705(b)(2) and the fee required by 37 CFR 1.18(e), the USPTO will issue a certificate of correction reflecting the PTA determination noted above.

Patentee should be aware that in order to preserve the right to review in the United States District Court for the District of Columbia of the USPTO patent term adjustment determination, patentee must ensure that he or she also take the steps required under 35 U.S.C. 154(b)(4)(A) in a timely manner. Nothing in the request for recalculation should be construed as providing an alternative time frame for commencing a civil action under 35 U.S.C. 154(b)(4)(A).

Any questions concerning this decision should be directed to the Office of Patent Legal Administration at 571-272-7702.

UNITED STATES PATENT AND TRADEMARK OFFICE

Commissioner for Patents
United States Patent and Trademark Office
P.O. Box 1450
Alexandria, VA 22313-1450
www.uspto.gov

BROOKS, CAMERON & HUEBSCH , PLLC
1221 NICOLLET AVENUE , SUITE 500
MINNEAPOLIS, MN 55403

COPY MAILED

JUL 1 6 2009

OFFICE OF PETITIONS

In re Application of
Stephen H. PURVINES
Application No. 11/804,292
Filed: May 17, 2007
Attorney Docket No. **900.0100001**

DECISION ON PETITION TO WITHDRAW FROM RECORD

This is a decision on the Request to Withdraw as attorney or agent of record under 37 C.F.R. § 1.36(b), filed April 6, 2009.

The request is **APPROVED**.

A grantable request to withdraw as attorney/agent of record must be signed by every attorney/agent seeking to withdraw or contain a clear indication that one attorney is signing on behalf of another/others.

The request was signed by Edward J. Brook, III on behalf of all attorneys of record. All attorneys/agents associated have been withdrawn. Applicant is reminded that there is no attorney of record at this time.

All future communications from the Office will be directed to the assignee of the entire interest at the address below until otherwise properly notified by the applicant.

Telephone inquiries concerning this decision should be directed to the undersigned at 571-272-7253.

/Monica A. Graves/
Petitions Examiner, Office of Petitions

cc: **KURZ-KASCH, INC.**
511 BYERS ROAD
MIAMISBURG, OH 45342

UNITED STATES PATENT AND TRADEMARK OFFICE

Commissioner for Patents
United States Patent and Trademark Office
P.O. Box 1450
Alexandria, VA 22313-1450
www.uspto.gov

Brooks, Cameron & Huebsch, PLLC
1221 Nicollet Avenue, Suite 500
Minneapolis, MN 55403

MAILED

MAY 11 2009

OFFICE OF PETITIONS

In re Application of	:	
Stephen H. Purvines	:	
Application No. 11/804,293	:	DECISION ON
Filed: May 17, 2007	:	PETITION TO WITHDRAW
Attorney Docket No. JWI128	:	FROM RECORD
	:	

This is a decision on the Request to Withdraw as attorney or agent of record under 37 C.F.R. § 1.36(b), filed April 6, 2009.

The request is **APPROVED**.

A grantable request to withdraw as attorney/agent of record must be signed by every attorney/agent seeking to withdraw or contain a clear indication that one attorney is signing on behalf of another/others. A request to withdraw will not be approved unless at least 30 (thirty) days would remain between the date of approval and the later of the expiration date of a time to file a response or the expiration date of the maximum time period which can be extended under 37 C.F.R. § 1.136(a).

The request was signed by Edward J. Brooks III on behalf of attorney/agents associated with customer number 38356. All attorneys/agents associated with customer number 38356 have been withdrawn.

Applicant is reminded that there is no attorney of record at this time.

The request to change the correspondence of record is not acceptable as the requested correspondence address is not that of (1) the first named signing inventor; or (2) an intervening assignee of the entire interest under 37 C.F.R. 3.71. Accordingly, all correspondence will be mailed to address of the inventor at the first copied address below, since no assignee has properly intervened in this application. A courtesy copy of this decision will be mailed to the address noted on the request. If this person(s) desire to receive future correspondence regarding this application, the proper power of attorney documents and a Statement under 37 CFR 3.73(b) must be submitted.

Application No. 11/804,293

Telephone inquiries concerning this decision should be directed to Kimberly Inabinet at 571-272-4618.

Kimberly Inabinet
Petitions Examiner
Office of Petitions

cc: Stephen H. Purvines
15561 Carriage Lane
Mishawaka, IN 46545

cc: Kurz-Kasch, Inc.
511 Byers Road
Miamisburg, OH 45342

UNITED STATES PATENT AND TRADEMARK OFFICE

UNITED STATES DEPARTMENT OF COMMERCE
United States Patent and Trademark Office
Address: COMMISSIONER FOR PATENTS
P.O. Box 1450
Alexandria, Virginia 22313-1450
www.uspto.gov

APPLICATION NUMBER	FILING OR 371(C) DATE	FIRST NAMED APPLICANT	ATTY. DOCKET NO./TITLE
11/804,293	05/17/2007	Stephen H. Purvines	900.0110001

CONFIRMATION NO. 8372

POWER OF ATTORNEY NOTICE

38356
BROOKS, CAMERON & HUEBSCH , PLLC
1221 NICOLLET AVENUE , SUITE 500
MINNEAPOLIS, MN 55403

OC000000035918746

Date Mailed: 05/11/2009

NOTICE REGARDING CHANGE OF POWER OF ATTORNEY

This is in response to the Power of Attorney filed 04/06/2009.

- The withdrawal as attorney in this application has been accepted. Future correspondence will be mailed to the new address of record. 37 CFR 1.33.

/kainabinet/

Office of Data Management, Application Assistance Unit (571) 272-4000, or (571) 272-4200, or 1-888-786-0101

UNITED STATES PATENT AND TRADEMARK OFFICE

Commissioner for Patents
United States Patent and Trademark Office
P.O. Box 1450
Alexandria, VA 22313-1450
www.uspto.gov

MICHAEL BEST & FRIEDRICH LLP
100 E WISCONSIN AVENUE
SUITE 3300
MILWAUKEE, WI 53202

COPY MAILED

JUN 1 2 2008

OFFICE OF PETITIONS

In re Application of
Carl C. NESBITT, et al
Application No. 11/804,299
Filed: May 17, 2007
Attorney Docket No. 079273-9002-07

DECISION ON PETITION
TO WITHDRAW
FROM RECORD

This is a decision on the Request to Withdraw as attorney or agent of record under 37 C.F.R. § 1.36(b), filed December 6, 2007.

The request is **NOT APPROVED**.

The request cannot be approved because no reasons for withdrawal have been provided. The Office cannot, at this time, determine whether practitioner's request is one of the mandatory or permissive reasons enumerated in 37 CFR 10.40. Any subsequent requests must include reasons for withdrawal. Please note that there is a space provided for on PTO/SB/83 (Request to Withdraw as Attorney or Agent) to supply practitioner's reasons.

All future communications from the Office will continue to be directed to the above-listed address until otherwise notified by applicant.

Telephone inquiries concerning this decision should be directed to the undersigned at 571-272-6735.

Diane Goodwyn
Petitions Examiner
Office of Petitions

cc: RETICLE, INC.
334 STATE STREET
SUITE 204
LOS ALTOS, CA 94022

UNITED STATES PATENT AND TRADEMARK OFFICE

Commissioner for Patents
United States Patent and Trademark Office
P.O. Box 1450
Alexandria, VA 22313-1450
www.uspto.gov

MICHAEL BEST & FRIEDRICH LLP
100 E WISCONSIN AVENUE, SUITE 3300
MILWAUKEE WI 53202

COPY MAILED

DEC 0 9 2008

OFFICE OF PETITIONS

In re Application of	:	
Carl C. NESBITT, et al	:	
Application No. 11/804,299	:	DECISION ON PETITION
Filed: May 17, 2007	:	TO WITHDRAW
Attorney Docket No. 079273-9002-07	:	FROM RECORD
	:	

This is a decision on the Request to Withdraw as attorney or agent of record under 37 C.F.R. § 1.36(b), filed October 21, 2008.

The request is **NOT APPROVED.**

A grantable request to withdraw as attorney/agent of record must be signed by every attorney/agent seeking to withdraw or contain a clear indication that one attorney is signing on behalf of another/others. The Office requires the practitioner(s) requesting withdrawal to certify that he, she, or they have: (1) given reasonable notice to the client, prior to the expiration of the response period, that the practitioner(s) intends to withdraw from employment; (2) delivered to the client or a duly authorized representative of the client all papers and property (including funds) to which the client is entitled; and (3) notified the client of any responses that may be due and the time frame within which the client must respond, pursuant 37 CFR 10.40(c).

The request cannot be approved because there is no indication that the acts noted in the above-identified certifications have been performed.

The request cannot be approved because the attorneys of record were not appointed by Customer No. 23409, as indicated. The attorneys were appointed by naming each attorney individually.

All future communications from the Office will continue to be directed to the above-listed address until otherwise notified by applicant.

Telephone inquiries concerning this decision should be directed to the undersigned at 571-272-6735.

Diane Goodwyn
Petitions Examiner
Office of Petitions

cc: RETICLE, INC.
334 STATE STREET
SUITE 204
LOS ALTOS, CA 94022

UNITED STATES PATENT AND TRADEMARK OFFICE

Commissioner for Patents
United States Patent and Trademark Office
P.O. Box 1450
Alexandria, VA 22313-1450
www.uspto.gov

MICHAEL BEST & FRIEDRICH LLP
100 E WISCONSIN AVENUE, SUITE 3300
MILWAUKEE, WI 53202

COPY MAILED

FEB 23 2009

OFFICE OF PETITIONS

In re Application of
Carl C. NESBITT, et al
Application No. 11/804,299
Filed: May 17, 2007
Attorney Docket No. 079273-9002-07

DECISION ON PETITION
TO WITHDRAW
FROM RECORD

This is a decision on the Request to Withdraw as attorney or agent of record under 37 C.F.R. § 1.36(b), filed December 30, 2008.

The request is **APPROVED**.

A grantable request to withdraw as attorney/agent of record must be signed by every attorney/agent seeking to withdraw or contain a clear indication that one attorney is signing on behalf of another/others. The Office requires the practitioner(s) requesting withdrawal to certify that he, she, or they have: (1) given reasonable notice to the client, prior to the expiration of the response period, that the practitioner(s) intends to withdraw from employment; (2) delivered to the client or a duly authorized representative of the client all papers and property (including funds) to which the client is entitled; and (3) notified the client of any responses that may be due and the time frame within which the client must respond, pursuant 37 CFR 10.40(c).

The request was signed by Billy Jean Smith on behalf of all the attorneys of record.

All the attorneys of record have been withdrawn.

Applicant is reminded that there is no attorney of record at this time.

All future communications from the Office will be directed to the address below until otherwise properly notified by the applicant.

Telephone inquiries concerning this decision should be directed to the undersigned at 571-272-6735.

Diane Goodwyn
Petitions Examiner
Office of Petitions

cc: CARL C. NESBITT
518 ETHEL AVENUE
HANCOCK, MI 49930

UNITED STATES PATENT AND TRADEMARK OFFICE

Commissioner for Patents
United States Patent and Trademark Office
P.O. Box 1450
Alexandria, VA 22313-1450
www.uspto.gov

PETER LOFFLER
P.O. BOX 1001
NICEVILLE FL 32588-1001

MAILED

JUN 15 2010

OFFICE OF PETITIONS

In re Application of	:	
CRAVATT, Michael T.	:	
Application No. 11/804,316	:	DECISION ON PETITION
Filed: May 18, 2007	:	TO WITHDRAW
Attorney Docket No. 270520	:	FROM RECORD
	:	

This is a decision on the Request to Withdraw as attorney or agent of record under 37 C.F.R. § 1.36(b), filed May 12, 2010.

The request is **APPROVED**.

A grantable request to withdraw as attorney/agent of record must be signed by every attorney/agent seeking to withdraw or contain a clear indication that one attorney is signing on behalf of another/others. The Office requires the practitioner(s) requesting withdrawal to certify that he, she, or they have: (1) given reasonable notice to the client, prior to the expiration of the response period, that the practitioner(s) intends to withdraw from employment; (2) delivered to the client or a duly authorized representative of the client all papers and property (including funds) to which the client is entitled; and (3) notified the client of any responses that may be due and the time frame within which the client must respond, pursuant 37 CFR 10.40(c).

The request was signed by Pete Loffler, the sole attorney of record. Peter Loffler has been withdrawn as attorneys or agents of record. Applicant is reminded that there is no attorney of record at this time.

All future correspondence will be directed to the inventor Michael Cravatt at the address indicated below. There is an outstanding Office action mailed February 03, 2010 that requires a reply from the applicant.

Telephone inquiries concerning this decision should be directed to Tredelle Jackson at 571-272-2783.

/Tredelle D. Jackson/
Paralegal Specialist
Office of Petitions

cc: **MICHAEL T. CRAVATT**
7335 BRICKYARD ROAD
MOLINO FL 32577

UNITED STATES PATENT AND TRADEMARK OFFICE

Commissioner for Patents
United States Patent and Trademark Office
P.O. Box 1450
Alexandria, VA 22313-1450
www.uspto.gov

THE LAW OFFICES OF ANDREW D. FORTNEY, PH.D., P.C.
401 W FALLBROOK AVE STE 204
FRESNO CA 93711-5835

MAILED

MAY 11 2009

OFFICE OF PETITIONS

In re Application of

HUNG, Hsien-Chung et al.
Application No. 11/804,380
Filed: May 17, 2007
Attorney Docket No. **5QUANTA200504US**

DECISION ON PETITION
TO WITHDRAW
FROM RECORD

This is a decision on the Request to Withdraw as attorney or agent of record under 37 C.F.R. § 1.36(b), filed April 10, 2009.

The request is **NOT APPROVED** because it is moot.

A review of the file record indicates that the power of attorney to The Law Offices of Andrew D. Fortney, PH.D., P.C. has been revoked by the assignee of the patent application on April 22, 2009. Accordingly, the request to withdraw under 37 C.F.R. § 1.36(b) is moot.

All future communications from the Office will continue to be directed to the below-listed address until otherwise notified by applicant.

Telephone inquires concerning this decision should be directed to Michelle R. Eason at 571-272- 4231.

Michelle R. Eason
Paralegal Specialist
Office of Petitions

cc: **JUAN CARLOS A. MARQUEZ**
REED SMITH LLP
3110 FAIRVIEW PARK DRIVE
SUITE 1400
FALLS CHURCH, VIRGINIA 22042

UNITED STATES PATENT AND TRADEMARK OFFICE

Commissioner for Patents
United States Patent and Trademark Office
P.O. Box 1450
Alexandria, VA 22313-1450
www.uspto.gov

DTS, INC.
5171 CLARETON DRIVE
AGOURA HILLS CA 91301

MAILED

FEB 12 2009

OFFICE OF PETITIONS

In re Application of
Kimball Darr Thurstorn, III
Application No. 11/804,416
Filed: May 18, 2007
Attorney Docket No. 263-13-482

DECISION ON PETITION
TO WITHDRAW
FROM RECORD

This is a decision on the Request to Withdraw as attorney or agent under 37 C.F.R. § 1.36(b) or 37 C.F.R. § 10.40 filed December 11, 2008.

The request is **APPROVED**.

A review of the file record indicates that DTS, Inc.: (1) does not have power of attorney in this patent application; and (2) has been employed or otherwise engaged in the proceedings in this patent application. In view of the present decision, DTS, Inc has been withdrawn from the present application and may not prepare or submit papers under 37 C.F.R. § 1.34, or correspond in any manner in this application unless appointed in an acceptable power of attorney under 37 C.F.R. § 1.32(b).

The request to change the correspondence of record is not acceptable as the requested correspondence address is not that of: (1) the first named signing inventor; or (2) the intervening assignee of the entire interest. All future communications from the Office will be directed to the first named signing inventor at the first copied address below until otherwise properly notified by the applicant.

In order to request or take action in a patent matter, the assignee must establish its ownership of the patent to the satisfaction of the Director. In this regard, a Statement under 37 CFR 3.73(b) must have either: (i) documentary evidence of a chain of title from the original owner to the assignee (e.g., copy of an executed assignment), and a statement affirming that the documentary evidence of the chain of title from the original owner to the assignee was or concurrently is being submitted for recordation pursuant to § 3.11; or (ii) a statement specifying where documentary evidence of a chain of title from the original owner to the assignee is recorded in the assignment records of the Office (e.g., reel and frame number).

Applicant is reminded that there is no attorney of record at this time.

There are no pending Office actions at the present time.

Telephone inquires concerning this decision should be directed to undersigned at 571-272-1642.

/AMW/
April M. Wise
Petitions Examiner
Office of Petitions

cc: KIMBALL DARR THRURSTON, III
3551 DIVISION STREET
LOS ANGELES, CA 90065

cc: DTS DIGITAL IMAGES
2777 N. ONTARIO STREET
BURBANK, CA 91504

UNITED STATES PATENT AND TRADEMARK OFFICE

UNITED STATES DEPARTMENT OF COMMERCE
United States Patent and Trademark Office
Address: COMMISSIONER FOR PATENTS
P.O. Box 1450
Alexandria, Virginia 22313-1450
www.uspto.gov

APPLICATION NUMBER	FILING OR 371(C) DATE	FIRST NAMED APPLICANT	ATTY. DOCKET NO./TITLE
11/804,416	05/18/2007	Kimball Darr Thurston III	263-13-482

CONFIRMATION NO. 8940

POWER OF ATTORNEY NOTICE

43634
DTS, INC.
5171 CLARETON DRIVE
AGOURA HILLS, CA 91301

OC000000034430144

Date Mailed: 02/06/2009

NOTICE REGARDING CHANGE OF POWER OF ATTORNEY

This is in response to the Power of Attorney filed 12/11/2008.

- The withdrawal as attorney in this application has been accepted. Future correspondence will be mailed to the new address of record. 37 CFR 1.33.

/amwise/

Office of Data Management, Application Assistance Unit (571) 272-4000, or (571) 272-4200, or 1-888-786-0101

UNITED STATES PATENT AND TRADEMARK OFFICE

Commissioner for Patents
United States Patent and Trademark Office
P.O. Box 1450
Alexandria, VA 22313-1450
www.uspto.gov

THE LAW OFFICES OF
ANDREW D. FORTNEY, PH.D., P.C.
401 W. FALLBROOK AVE., SUITE 204
FRESNO, CA 93711-5835

MAILED

MAY 11 2009

OFFICE OF PETITIONS

In re Application of	:	
Chin Tsai YEN, et al	:	
Application No. 11/804,421	:	DECISION ON PETITION
Filed: May 17, 2007	:	TO WITHDRAW
Attorney Docket No. 5QUANTA200611US	:	FROM RECORD
	:	

This is a decision on the Request to Withdraw as attorney or agent of record under 37 C.F.R. § 1.36(b), filed April 13, 2009.

The request is **APPROVED**.

A grantable request to withdraw as attorney/agent of record must be signed by every attorney/agent seeking to withdraw or contain a clear indication that one attorney is signing on behalf of another/others. The Office requires the practitioner(s) requesting withdrawal to certify that he, she, or they have: (1) given reasonable notice to the client, prior to the expiration of the response period, that the practitioner(s) intends to withdraw from employment; (2) delivered to the client or a duly authorized representative of the client all papers and property (including funds) to which the client is entitled; and (3) notified the client of any responses that may be due and the time frame within which the client must respond, pursuant 37 CFR 10.40(c).

The request was signed by Andrew D. Fortney on behalf of the attorneys of record associated with Customer No. 36872.

The attorneys of record associated with Customer No. 36872 have been withdrawn.

Applicant is reminded that there is no attorney of record at this time.

All future communications from the Office will be directed to the first signing inventor at the address below until otherwise properly notified by the applicant.

In order to request or take action in a patent matter, the assignee must establish its ownership of the patent to the satisfaction of the Director. In this regard, a Statement under 37 CFR 3.73(b) must have either: (i) documentary evidence of a chain of title from the original owner to the assignee (*e.g.*, copy of an executed assignment), and a statement affirming that the documentary evidence of

the chain of title from the original owner to the assignee was or concurrently is being submitted for recordation pursuant to § 3.11; or (ii) a statement specifying where documentary evidence of a chain of title from the original owner to the assignee is recorded in the assignment records of the Office (*e.g.*, reel and frame number).

Telephone inquiries concerning this decision should be directed to the undersigned at 571-272-6735.

Diane Goodwyn
Petitions Examiner
Office of Petitions

cc: CHIN TSAI YEN
4F, NO. 10, ALLEY 10, LANE 591
SEC. 1, NEIHU RD.,
NEIHU DISTRICT
TAIPEI CITY 114
TAIWAN (R.O.C.)

UNITED STATES PATENT AND TRADEMARK OFFICE

UNITED STATES DEPARTMENT OF COMMERCE
United States Patent and Trademark Office
Address: COMMISSIONER FOR PATENTS
P.O. Box 1450
Alexandria, Virginia 22313-1450
www.uspto.gov

APPLICATION NUMBER	FILING OR 371(C) DATE	FIRST NAMED APPLICANT	ATTY. DOCKET NO./TITLE
11/804,421	05/17/2007	Chin Tsai Yen	5QUANTA200611US

CONFIRMATION NO. 8933

POWER OF ATTORNEY NOTICE

36872
THE LAW OFFICES OF ANDREW D. FORTNEY, PH.D., P.C.
401 W FALLBROOK AVE STE 204
FRESNO, CA 93711-5835

OC000000035897279

Date Mailed: 05/08/2009

NOTICE REGARDING CHANGE OF POWER OF ATTORNEY

This is in response to the Power of Attorney filed 04/13/2009.

- The withdrawal as attorney in this application has been accepted. Future correspondence will be mailed to the new address of record. 37 CFR 1.33.

/dcgoodwyn/

Office of Data Management, Application Assistance Unit (571) 272-4000, or (571) 272-4200, or 1-888-786-0101

UNITED STATES PATENT AND TRADEMARK OFFICE

UNITED STATES DEPARTMENT OF COMMERCE
United States Patent and Trademark Office
Address: COMMISSIONER FOR PATENTS
P.O. Box 1450
Alexandria, Virginia 22313-1450
www.uspto.gov

APPLICATION NO.	FILING DATE	FIRST NAMED INVENTOR	ATTORNEY DOCKET NO.	CONFIRMATION NO.
11/804,461	05/18/2007	Christine Konradi	04843/156003	9802

21559 7590 02/23/2010
CLARK & ELBING LLP
101 FEDERAL STREET
BOSTON, MA 02110

EXAMINER
CHERNYSHEV, OLGA N

ART UNIT	PAPER NUMBER
1649	

NOTIFICATION DATE	DELIVERY MODE
02/23/2010	ELECTRONIC

Please find below and/or attached an Office communication concerning this application or proceeding.

The time period for reply, if any, is set in the attached communication.

Notice of the Office communication was sent electronically on above-indicated "Notification Date" to the following e-mail address(es):

patentadministrator@clarkelbing.com

UNITED STATES PATENT AND TRADEMARK OFFICE

Commissioner for Patents
United States Patent and Trademark Office
P.O. Box 1450
Alexandria, VA 22313-1450
www.uspto.gov

FEB 23 2010

CLARK & ELBING LLP
101 FEDERAL STREET
BOSTON MA 02110

In re Application of:	:
Christine Konradi	:
Serial No.: 11/804,461	: PETITION DECISION
Filed: May 18, 2007	:
Attorney Docket No.: **04843/156003**	:

This is in response to the petition under 37 CFR § 1.181, filed November 16, 2009, requesting that the finality of the Office action of September 22, 2009 be withdrawn.

BACKGROUND

The examiner mailed a non-final Office action on May 15, 2009 setting a three month statutory limit for reply. At the time of this non-final Office action, claims 1-28 were pending and claims 12-22 were rejected. The examiner rejected claims 12-22 under 35 USC 112, second paragraph, as indefinite. Claims 12-22 were rejected under 35 USC 112, first paragraph, as failing to comply with the enablement requirement. Claims 1-11 and 23-28 were withdrawn from consideration.

In reply to the non-final Office action of May 15, 2009, applicant filed a response on August 6, 2009. The response submitted by applicant included remarks, arguments traversing the rejections made in the non-final Office action and amendments to the claims. Claims 13, 21, 22 and 23-28 were cancelled. Claims 29-33 were newly added.

On September 22, 2009, the examiner mailed a final Office action setting a three month statutory limit for reply. At the time of this final Office action, claims 1-12, 14-19, 22 and 29-33 were pending. The examiner rejected claims new claims 29, 30, 32 and 33 under 35 USC 112, second paragraph, as indefinite. Claims 12, 14-19, 22 and 29-33 were rejected under 35 USC 112, first paragraph, as failing to comply with the enablement requirement. Claims 1-11 were again withdrawn from consideration.

In response thereto, applicant filed this petition on November 16, 2009, requesting that the finality of the Office action of September 22, 2009 be withdrawn.

DISCUSSION

The petition and the file history have been carefully considered.

In the petition filed by applicants on November 16, 2009, applicant request that the finality of the Office action of September 22, 2009 be withdrawn. Specifically, applicants argue that "the Office stated, on pages 3-4 of the final action, that the specification does not enable diagnosing a propensity to BPD and rejected claim 12 accordingly. Claim 12, prior to Applicant's amendment, recited diagnosing a propensity to a psychotic disorder, and claim 13 recited that the psychotic disorder was BPD. Thus, claims 12 and 13, as filed, encompassed methods of diagnosing a propensity to BPD and could have been rejected on this ground. It is therefore improper to make this rejection final."

Applicant also argues that "Similar reasoning can be applied to the ground for rejection regarding the use of cell samples other than lymphocytes (see page 4 of the final action). Claim 12, prior to Applicant's amendment, recited a method involving the use of a "cell sample" taken from a subject. Aside from mentioning that the examples in the specification involve the use of lymphocytes, the Office did not, in the first action, reject claim 12 for reciting "a cell sample." Instead, this rejection was brought in the final action for the first time. Because this language was not changed by Applicant's amendment, the Office could have brought this rejection in the first action. It is likewise not proper for the Office to make this rejection final."

Finally, applicant argues "the Office states in the final action that the claims are not enabled for any method other than one that involves *glucose* stress. Previously, the Office merely made mention that the examples in the specification involve glucose stress (see page 6 of the first action), but did not reject the claims for reciting subjecting a cell from said sample to stress. As above, Applicant's amendment did not change the scope of this claim limitation. For this reason, this ground for rejection could have been brought prior to Applicant's amendment. It is thus improper to make this rejection final."

Applicant's arguments are well-taken and found persuasive because the rejections made in the final Office action could have been raised in the previous Office Action because the language found to be indefinite and non-enabled was previously under consideration by the examiner at the time the non-final Office action was prepared.

MPEP § 706.07 recites:

> Under present practice, second or any subsequent actions on the merits shall be final, except where the examiner introduces a new ground of rejection that is neither necessitated by applicant's amendment of the claims nor based on information submitted in an information disclosure statement filed during the period set forth in 37 CFR 1.97(c) with the fee set forth in 37 CFR 1.17(p).

Thus, it is *not* proper for an office action to be made final when the examiner introduces a new ground of rejection that is neither necessitated by applicant's amendment of the claims nor based on information submitted in an information disclosure statement filed during the period set forth in 37 CFR 1.97(c).

DECISION

The petition is **GRANTED.**

The Office action mailed September 22, 2009 is hereby vacated to the extent that it was made "final" and the Office action is now considered to be a non-final Office action. The after final amendment of January 22, 2010 will also be entered. This application will be forwarded to the examiner to take an action consistent with the decision herein.

Should there be any questions about this decision please contact Marianne C. Seidel, by letter addressed to Director, TC 1600, at the address listed above, or by telephone at 571-272-0584 or by facsimile sent to the general Office facsimile number, 703-872-9306.

George C. Elliott

George Elliott
Director, Technology Center 1600

UNITED STATES PATENT AND TRADEMARK OFFICE

Commissioner for Patents
United States Patent and Trademark Office
P.O. Box 1450
Alexandria, VA 22313-1450
www.uspto.gov

MAILED

MAR 12 2010

OFFICE OF PETITIONS

MANNAVA & KANG PC
11240 WAPLES MILL ROAD
SUITE 300
FAIRFAX VA 22030

In re Application of	:	
Ahmen, et al.	:	
Application No. 11/804,463	:	ON PETITION
Filed: May 18, 2007	:	
Attorney Docket No. Sonasoft0463	:	

This is a decision on the petition to revive under 37 CFR 1.137(b), filed October 21, 2009.

The petition under 37 CFR 1.137(b) is **GRANTED**.

The above-identified application became abandoned for failure to timely file a reply in response to the non-final Office action, mailed January 26, 2009. This Office action set a shortened statutory period for reply of three months. No reply having been received, the application became abandoned on April 27, 2009. The Office mailed a Notice of Abandonment on September 8, 2009.

With the instant petition, applicants made the proper statement of unintentional delay, paid the petition fee, and filed the required reply in the form of an Amendment.

The application is being forwarded to Group Art Unit 2456 for consideration of the Amendment, filed October 21, 2009.

Telephone inquiries related to this decision should be directed to the undersigned at (571)272-3207.

Cliff Congo
Petitions Attorney
Office of Petitions

UNITED STATES PATENT AND TRADEMARK OFFICE

Commissioner for Patents
United States Patent and Trademark Office
P.O. Box 1450
Alexandria, VA 22313-1450
www.uspto.gov

MERCK
P O BOX 2000
RAHWAY, NJ 07065-0907

MAILED

MAY 18 2010

OFFICE OF PETITIONS

In re Application of	:	
Natarajan SETHURAMAN, et *al.*	:	
Application No. 11/804,510	:	DECISION GRANTING PETITION
Filed: May 18, 2007	:	UNDER 37 CFR 1.313(c)(2)
Attorney Docket No. **22376Y**	:	

This is a decision on the petition under 37 CFR 1.313(c)(2), filed May 14, 2010, to withdraw the above-identified application from issue after payment of the issue fee.

The petition is **GRANTED**.

The above-identified application is withdrawn from issue for consideration of a submission under 37 CFR 1.114 (request for continued examination). *See* 37 CFR 1.313(c)(2).

Petitioner is advised that the issue fee paid on April 22, 2010 cannot be refunded. If, however, this application is again allowed, petitioner may request that it be applied towards the issue fee required by the new Notice of Allowance.[1]

Telephone inquiries should be directed to the undersigned at (571) 272-7253.

This application is being referred to Technology Center AU 1647 for processing of the request for continued examination under 37 CFR 1.114 and for consideration of the concurrently filed information disclosure statement.

/Monica A. Graves/
Petitions Examiner, Office of Petitions

---

[1] *The request to apply the issue fee to the new Notice may be satisfied by completing and returning the new Part B – Fee(s) Transmittal Form (along with any balance due at the time of submission). Petitioner is advised that the Issue Fee Transmittal Form* ***must*** *be completed and timely submitted to avoid abandonment of the application.*

UNITED STATES PATENT AND TRADEMARK OFFICE

Commissioner for Patents
United States Patent and Trademark Office
P.O. Box 1450
Alexandria, VA 22313-1450
www.uspto.gov

TRIANGLE PATENTS, P.L.L.C.
P.O. BOX 28539
RALEIGH NC 27611-8539

COPY MAILED

MAY 19 2008

In re Application of	:	
WILLIAMS, et al.	:	
Application No. 11/804,514	:	DECISION ON PETITION
Filed: May 18, 2007	:	TO WITHDRAW
Attorney Docket No. **4044-002**	:	FROM RECORD

This is a decision on the Request to Withdraw as attorney or agent of record under 37 C.F.R. § 1.36(b), filed March 14, 2008.

The request is **APPROVED**.

A grantable request to withdraw as attorney/agent of record must be signed by every attorney/agent seeking to withdraw or contain a clear indication that one attorney is signing on behalf of another/others. A request to withdraw will not be approved unless at least 30 (thirty) days would remain between the date of approval and the later of the expiration date of a time to file a response or the expiration date of the maximum time period which can be extended under 37 C.F.R. § 1.136(a).

The request was signed by Jinan Glasgow on behalf of all attorneys of record. All attorneys/agents associated have been withdrawn. Applicant is reminded that there is no attorney of record at this time.

All future correspondence will be directed to the first named inventor Lawrence A.D. Williams at the address indicated below.

Telephone inquiries concerning this decision should be directed to the undersigned at 571-272-7253.

Monica A. Graves
Petitions Examiner
Office of Petitions

cc: **LAWRENCE A.D. WILLIAMS**
81 MIAMI DRIVE, INDEPENDENCE CITY,
GREGORY PARK P.O.
ST. CATHERINE, JAMAICA

cc: **H. GOERGE LEVY**
PG-PHARMA, LLC
2246 N. MONROE STREET
MONROE, MI 48162

UNITED STATES PATENT AND TRADEMARK OFFICE

Commissioner for Patents
United States Patent and Trademark Office
P.O. Box 1450
Alexandria, VA 22313-1450
www.uspto.gov

COPY MAILED

DEC 1 8 2009

OFFICE OF PETITIONS

JONES DAY
222 EAST 41ST ST
NEW YORK NY 10017

In re Application of	:	
Benjamin Oshlack et al.	:	DECISON ON PETITION
Application No. 11/804,518	:	
Filed: May 17, 2007	:	
Attorney Docket No. 6750-416-999		

This is a decision on the petition under 37 CFR 1.137(b), filed October 27, 2009, to revive the above-identified application.

The petition is **GRANTED**.

The application became abandoned for failure to reply in a timely manner to the non-final Office action mailed April 14, 2009, which set a shortened statutory period for reply of three (3) months. No extensions of time under the provisions of 37 CFR 1.136(a) were obtained. Accordingly, the application became abandoned on July 15, 2009. A Notice of Abandonment was mailed on October 23, 2009.

The petition satisfies the requirements of 37 CFR 1.137(b) in that petitioner has supplied (1) the reply in the form of a continuing application under 37 CFR 1.53(b), (2) the petition fee of $1,620 and (3) a proper statement of unintentional delay. Accordingly, the filing of a continuing application under 37 CFR 1.53(b) is accepted as being unintentionally delayed.

The application is being revived solely for purposes of continuity. As continuity has been established by this decision reviving the application, the application is again abandoned in favor of a continuing application under 37 CFR 1.53(b).

37 CFR 1.137(b)(3) requires a statement that the entire delay in filing the required reply from the due date for the reply until the filing of a grantable petition pursuant to 37 CFR 1.137(b) was unintentional. Since the statement contained in the petition varies from the language required by 37 CFR 1.137(b)(3), the statement contained in the petition is being construed as the statement

required by 37 CFR 1.137(b)(3). Petitioner must notify the Office if this is **not** a correct interpretation of the statement contained in the petition.

An extension of time under 37 CFR 1.136 must be filed prior to the expiration of the maximum extendable period for reply. *See* In re Application of S., 8 USPQ2d 1630, 1631 (Comm'r Pats. 1988). Since the $1,110 extension of time fee submitted with the petition on October 27, 2009 was subsequent to the maximum extendable period for reply, this fee is unnecessary and will be credited to petitioner's deposit account.

Telephone inquiries concerning this decision should be directed to Kimberly Inabinet at (571) 272-4618.

Carl Friedman
Petitions Examiner
Office of Petitions

UNITED STATES PATENT AND TRADEMARK OFFICE

Commissioner for Patents
United States Patent and Trademark Office
P.O. Box 1450
Alexandria, VA 22313-1450
www.uspto.gov

TERRY B. MORRIS
P.O. BOX 1993
PRAIRIEVILLE LA 70769

COPY MAILED
SEP 02 2008

In re Application of

BAKER, Mason et al.
Application No. 11/804,530
Filed: May 18, 2007
Attorney Docket No. **MB - 002**

DECISION ON PETITION
TO MAKE SPECIAL UNDER
37 CFR 1.102(c)(1)

This is a decision on the petition under 37 CFR 1.102(c)(1), filed August 07, 2008, to make the above-identified application special based on applicant's age as set forth in M.P.E.P. § 708.02, Section IV.

The petition is **GRANTED**.

A grantable petition to make an application special under 37 CFR 1.102(c)(1) and MPEP § 708.02, Section IV: Applicant's Age must be accompanied by evidence showing that at least one of the applicants is 65 years of age, or more, such as a birth certificate or a statement by applicant. No fee is required

The instant petition includes a statement by Mason Baker attesting that he is over 65 years of age. Accordingly, the above-identified application has been accorded "special" status.

Telephone inquiries concerning this decision should be directed to Michelle R. Eason at 571-272-4231
All other inquiries concerning either the examination or status of the application should be directed to the Technology Center.

The application is being forwarded to the Technology Center Art Unit 1793 for action on the merits commensurate with this decision.

Michelle R. Eason
Paralegal Specialist
Office of Petitions

UNITED STATES PATENT AND TRADEMARK OFFICE

Commissioner for Patents
United States Patent and Trademark Office
P.O. Box 1450
Alexandria, VA 22313-1450
www.uspto.gov

MAILED

JUN 30 2010

OFFICE OF PETITIONS

WOLF GREENFIELD & SACKS, P.C.
600 ATLANTIC AVENUE
BOSTON MA 02210-2206

Applicant: Silence et al.
Appl. No.: 11/804,543
Filing Date: May 18, 2007
Title: STABILIZED SINGLE DOMAIN ANTIBODIES
Attorney Docket: A0848.70006US01
Pub. No.: US 2009/0238829 A1
Pub. Date: September 24, 2009

This is a decision on the request for a corrected patent application publication under 37 CFR 1.221(b), received on November 18, 2009, for the above-identified application.

The request is DISMISSED.

Applicant requests that the application be republished because the patent application publication contains a material error in dependent claim 21, wherein the word "germine" was used rather than "germline".

37 CFR 1.221 (b) is applicable "only when the Office makes a **material mistake** which is apparent from Office records.... Any request for a corrected publication or revised patent application publication other than provided as provided in paragraph (a) of this section must be filed within two months from the date of the patent application publication. This period is not extendable". A material mistake must affect the public's ability to appreciate the technical disclosure of the patent application publication, to determine the scope of the patent application publication, or to determine the scope of the provisional rights that an applicant may seek to enforce upon issuance of a patent. [1]

The error in dependent claim 21, wherein "germline" is misprinted as "germine" may be Office error, but it is not a material Office error under 37 CFR 1.221. The error is a typographical error that does not affect the interpretation of the published claims. The published claim 21 recites the phrase "germine antibody gene" rather than "germline antibody gene." While the claim is clearly grammatically incorrect, one of ordinary skill in the art would understand the nature of the typographical error and would not be misled as to the scope of the claim. This error therefore does not affect the public's ability to appreciate the technical disclosure of the patent application

[1] Changes to Implement Eighteen-Month Publication of Patent Applications, 65 FR 57023, 57038 (Sept. 20, 2000), 1239, Off. Gaz. Pat. Office Notices 63, 75 (Oct. 10, 2000) (final rule).

publication, to determine the scope of the patent application publication, or to determine the scope of the provisional rights that an applicant may seek to enforce upon issuance of a patent.

The applicant is advised that a "request for republication of an application previously published" may be filed under 37 CFR 1.221(a). Such a request for republication "must include a copy of the application compliance with the Office's electronic filing system requirements and be accompanied by the publication fee set forth in § 1.18(d) and the processing fee set forth in § 1.17(i)." If the request for republication does not comply with the electronic filing system requirements, the republication will not take place and the publication fee set forth in § 1.18(d) will be refunded. The processing fee will be retained.

A guide for filing a request for a Pre-Grant Publication, such as a request for republication, may be found on the link below:

http://www.uspto.gov/ebc/portal/tutorials.htm

Any request for republication under 37 CFR 1.221(a), must be submitted via the EFS system, as a "Pre-Grant Publication".

Inquiries relating to this matter may be directed to Mark Polutta at (571) 272-7709.

Mark Polutta
Senior Legal Advisor
Office of Patent Legal Administration
Office of the Deputy Commissioner
for Patent Examination Policy

UNITED STATES PATENT AND TRADEMARK OFFICE

Commissioner for Patents
United States Patent and Trademark Office
P.O. Box 1450
Alexandria, VA 22313-1450
www.uspto.gov

THE LAW OFFICES OF ANDREW D. FORTNEY, PH.D., P.C.
401 W FALLBROOK AVE STE 204
FRESNO CA 93711-5835

MAILED

MAY 07 2009

OFFICE OF PETITIONS

In re Application of	:	
LAI, Chi-Tong	:	
Application No. 11/804,554	:	DECISION ON PETITION
Filed: May 17, 2007	:	TO WITHDRAW
Attorney Docket No. **5QUANTA200625US**	:	FROM RECORD
	:	

This is a decision on the Request to Withdraw as attorney or agent of record under 37 C.F.R. § 1.36(b), filed April 13, 2009.

The request is **APPROVED**.

A grantable request to withdraw as attorney/agent of record must be signed by every attorney/agent seeking to withdraw or contain a clear indication that one attorney is signing on behalf of another/others. The Office requires the practitioner(s) requesting withdrawal to certify that he, she, or they have: (1) given reasonable notice to the client, prior to the expiration of the response period, that the practitioner(s) intends to withdraw from employment; (2) delivered to the client or a duly authorized representative of the client all papers and property (including funds) to which the client is entitled; and (3) notified the client of any responses that may be due and the time frame within which the client must respond, pursuant 37 CFR 10.40(c).

The request was signed by Andrew Fortney on behalf of all attorneys of record who are associated with customer No. 36872. All attorneys/agents associated with the Customer Number 36872 have been withdrawn. Applicant is reminded that there is no attorney of record at this time.

All future correspondence will be directed to the inventor Chi-Tong Lai at the address indicated below.

Telephone inquiries concerning this decision should be directed to Tredelle Jackson at 571-272-2783.

Tredelle D. Jackson
Paralegal Specialist
Office of Petitions

cc: **CHI-TONG LAI**
NO. 13, LANE 57
TAI CHANG 2ND ST.
TAO YUAN CITY, TAO YUAN SHIEN
TAIWAN

UNITED STATES PATENT AND TRADEMARK OFFICE

COMMISSIONER FOR PATENTS
UNITED STATES PATENT AND TRADEMARK OFFICE
P.O. BOX 1450
ALEXANDRIA, VA 22313-1450
www.uspto.gov

Paper No.

Andrew D. O'Brien
Finch Law Firm, LLC
701 Bellevue
P.O. Box 818
Cape Girardeau MO 63702-0818

COPY MAILED

JAN 09 2008

OFFICE OF PETITIONS

In re Application of	:	
Ronda Kay Jones et al.	:	DECISION ON PETITION
Application No. 11/804,571	:	
Filed: May 18, 2007	:	
Title: DEVICE FOR SECURING A	:	
DISPENSING NOZZLE TO A FILL	:	
TANK	:	

This is a decision on the petition pursuant to 37 C.F.R. § 1.57(a)(3), filed August 17, 2007, requesting that the above-referenced application be accorded a filing date of May 18, 2007.

Application papers in the above-identified application were filed on May 18, 2007. However, on June 20, 2007, the Initial Patent Examination Division mailed applicants a "Notice of Incomplete Nonprovisional Application," notifying applicants that the application papers had not been accorded a filing date because the application was deposited without drawings. The notice indicated that a filing date would be accorded upon the deposit of drawings, and set a two-month period for response.

In response, applicants timely filed this petition. In which, applicants acknowledge inadvertently omitting a copy of the drawings on submission of the present application. Applicants argued, however, that the filing date of May 18, 2007, should still be accorded pursuant to § 1.57(a)(3).

On September 21, 2004, § 1.57 was added to read, *in pertinent part*:

> (a) Subject to the conditions and requirements of this paragraph, if all or a portion of the specification or drawing(s) is inadvertently omitted from an application, but the application contains a claim under § 1.55 for priority of a prior-filed foreign application, or a claim under § 1.78 for the benefit of a prior-filed provisional, nonprovisional, or international application, that was present on the filing date of the application, and the inadvertently omitted portion of the specification or drawing(s) is completely contained in the prior-filed application, the claim under § 1.55 or § 1.78 shall also be considered an incorporation by reference of the prior-filed application as to the inadvertently omitted portion of the specification or drawing(s).
>
> (1) The application must be amended to include the inadvertently omitted portion of the specification or drawing(s) within any time period set by the Office, but in no case later than the close of prosecution as defined by § 1.114(b), or abandonment of the application, whichever occurs earlier…
>
> (3) If an application is not otherwise entitled to a filing date under § 1.53(b), the amendment must be by way of a petition pursuant to this paragraph accompanied by the fee set forth in § 1.17(f).

It is noted that the application as filed included a claim under 37 C.F.R. § 1.78 for the benefit of provisional application No. 60/802,019. Thus, pursuant to 37 C.F.R. § 1.57, the application as filed is considered to have incorporated by reference the prior filed application as to the inadvertently omitted drawings.

The present petition includes the petition fee, an amendment adding the inadvertently omitted drawings, and a newly executed declaration.

In view of the incorporation by reference of the prior application, the drawings supplied on August 17, 2007, would not constitute new matter if it were a part of the original

disclosure of the provisional application. Of course, the Examiner is expected to compare the drawings supplied on August 17, 2007, to those contained within prior application No. 60/802,019 in order to verify that it is an accurate copy of the drawings and that it contains no new matter.

In view thereof, the petition is **GRANTED**.

The Office of Patent Application Processing (OPAP) will be advised of this decision. Pursuant to this decision, the application will be referred to OPAP for **according of a filing date of May 18, 2007**, including the copy of the drawings from the provisional application supplied on August 17, 2007. Applicants will receive appropriate notifications regarding the fees owed, if any, and other information in due course from OPAP.

The general phone number for the Office of Petitions which should be used for status requests is (571) 272-3282. Telephone inquiries regarding this decision should be directed to Senior Attorney Paul Shanoski at (571) 272-3225.

for Anthony Knight
Supervisor
Office of Petitions

UNITED STATES PATENT AND TRADEMARK OFFICE

Commissioner for Patents
United States Patent and Trademark Office
P.O. Box 1450
Alexandria, VA 22313-1450
www.uspto.gov

HAMILTON, BROOK, SMITH & REYNOLDS, P.C.
530 VIRGINIA ROAD
P.O. BOX 9133
CONCORD MA 01742-9133

COPY MAILED

JUL 19 2007

OFFICE OF PETITIONS

In re Application of	:	
Cecil W. Deisch	:	
Application No. 11/804599	:	
Filing or 371(c) Date: 05/18/2007	:	DECISION
Attorney Docket Number:	:	ON PETITION
2376.2106-000	:	

This is a decision on the Petition to Accord a "Date In" Filing Date of Application, filed June 14, 2007. The petition is properly treated under 37 CFR § 1.10(c).

This Petition is hereby **dismissed as moot**.

Petitioner alleges that the application was deposited in Express Mail service on May 18, 2007. In support of this assertion, the petition is accompanied by a copy of the application Transmittal Form; a copy of Express Mail label No. EV215898381US, and a copy of Applicant's Express Mail Log.

A review of the Office records reveals that the filing date of the application is May 18, 2007. Further tot his, a Filing Receipt, noting the filing date of the application as May 18, 2007, was mailed on June 20, 2007.

In view of the above, the petition is dismissed. No fee has been charged and none is due.

The application is being referred to the Office of Initial Patent Examination to await Applicant's response to the Notice to File Missing Parts of Nonprovisional Application, mailed June 20, 2007, and for continued processing in due course.

Telephone inquiries concerning this matter should be directed to the undersigned at (571) 272-3232.

Derek L. Woods
Attorney
Office of Petitions

UNITED STATES PATENT AND TRADEMARK OFFICE

Commissioner for Patents
United States Patent and Trademark Office
P.O. Box 1450
Alexandria, VA 22313-1450
www.uspto.gov

In re Application of
Claude E. Cooke

Application No. 11804612

Filed: May 18,2007

Attorney Docket No. 03.1001.08

:DECISION ON PETITION TO MAKE SPECIAL
:UNDER 37 CFR 1.102(c)(1)

This is a decision on the electronic petition under 37 CFR 1.102 (c)(1) ,filed 04-AUG-2008 to make the above-identified application special based on applicant's age as set forth in MPEP § 708.02, Section IV.

The petition is **GRANTED**.

A grantable petition to make an application special under 37 CFR 1.102(c)(1), MPEP § 708.02, Section IV: Applicant's Age must include a statement by applicant or a registered practitioner having evidence that applicant is at least 65 years of age. No fee is required.

Accordingly, the above-identified application has been accorded “special” status and will be taken up for action by the examiner upon the completion of all pre-examination processing.

Telephone inquires concerning this electronic decision should be directed to the Electronic Business Center at 866-217-9197.

All other inquires concerning either the examination or status of the application should be directed to the Technology Center.

UNITED STATES PATENT AND TRADEMARK OFFICE

Commissioner for Patents
United States Patent and Trademark Office
P.O. Box 1450
Alexandria, VA 22313-1450
www.uspto.gov

WILIAM M. SELENKE
5 DRUMMOND ST.
CINCINNATI OH 45218

COPY MAILED

SEP 22 2008

OFFICE OF PETITIONS

In re Application of	:	
David W. Groomes	:	
Application No. 11/804,640	:	DECISION GRANTING PETITION
Filed: May 19, 2007	:	UNDER 37 CFR 1.137(b)
Attorney Docket No. 101-07	:	

This is a decision on the petition under 37 CFR 1.137(b), filed March 7, 2008, to revive the above-identified application.

The petition is **GRANTED**.

The petition satisfies the conditions for revival pursuant to the provisions of 37 CFR 1.137(b) in that (1) the reply in the form of corrected drawings; (2) the petition fee; and (3) the required statement of unintentional delay have been received. Accordingly, the reply to the Notice To File Corrected Application Papers mailed June 13, 2007, is accepted as having been unintentionally delayed.

Telephone inquiries concerning this decision should be directed to the undersigned at (571) 272-3208.

This matter is being referred to the Office of Patent Application Processing.

Karen Creasy

Karen Creasy
Petitions Examiner
Office of Petitions

UNITED STATES PATENT AND TRADEMARK OFFICE

Commissioner for Patents
United States Patent and Trademark Office
P.O. Box 1450
Alexandria, VA 22313-1450
www.uspto.gov

RICHMAN AND ASSOCIATES
PO BOX 3333
LA JOLLA CA 92038-3333

COPY MAILED
DEC 09 2008

In re Application of	:	
David Hoch	:	
Application No. 11/804,641	:	DECISION ON PETITION
Filed: May 17, 2007	:	
Attorney Docket No. DH004US1	:	

This is a decision on the petition under the unintentional provisions of 37 CFR 1.137(b), filed October 15, 2008, to revive the above-identified application.

The petition is **GRANTED**.

The petition satisfies the conditions for revival pursuant to the provisions of 37 CFR 1.137(b) in that (1) the reply in the form of replacement drawings and a declaration/surcharge fee; (2) the petition fee; and (3) the required statement of unintentional delay have been received. Accordingly, the reply to the Notices mailed June 12, 2007 and September 4, 2007, is accepted as having been unintentionally delayed.

Telephone inquiries concerning this decision should be directed to the undersigned at (571) 272-3208.

This application is being referred to the Office of Patent Application Processing for pre-examination processing..

Karen Creasy
Petitions Examiner
Office of Petitions

UNITED STATES PATENT AND TRADEMARK OFFICE

Commissioner for Patents
United States Patent and Trademark Office
P.O. Box 1450
Alexandria, VA 22313-1450
www.uspto.gov

COPY MAILED

FEB 2 9 2008

OFFICE OF PETITIONS

SCHWEGMAN, LUNDBERG & WOESSNER/SAP
P.O. BOX 2938
MINNEAPOLIS MN 55402

In re Application of

RITS, Maaten E.
Application No. 11/804,648
Filed: May 18, 2007
Attorney Docket No. **2058.160US1**

DECISION ON PETITION TO WITHDRAW FROM RECORD

This is a decision on the Request to Withdraw as attorney or agent of record under 37 C.F.R. § 1.36(b), filed December 05, 2007.

The request is **APPROVED**.

A grantable request to withdraw as attorney/agent of record must be signed by every attorney/agent seeking to withdraw or contain a clear indication that one attorney is signing on behalf of another/others. A request to withdraw will not be approved unless at least 30 (thirty) days would remain between the date of approval and the later of the expiration date of a time to file a response or the expiration date of the maximum time period which can be extended under 37 C.F.R. § 1.136(a).

The request was signed by Andre Marais on behalf of all attorneys of record who are associated with customer No. 50400. All attorneys/agents associated with the Customer Number 50400 have been withdrawn. Applicant is reminded that there is no attorney of record at this time.

The request to change the correspondence of record is not acceptable as the requested correspondence address is not that of: (1) the first named signing inventor; or (2) an intervening assignee of the entire interest under 37 C.F.R 3.71. All future communications from the Office will be directed to the first named signing inventor at the first copied address below until otherwise properly notified by the applicant.

Telephone inquiries concerning this decision should be directed to Tredelle Jackson at 571-272-2783.

Monica A. Graves
Petitions Examiner
Office of Petitions

cc: **MAARTEN E. RITS**
3 RUE NEUVE
NICE 06300
FRANCE

cc: **BILL HUGHES**
BRAKE HUGHES PLC
1700 PENNSYLVANIA AVENUE
NW SUITE 400
WASHINGTON DC 20006

UNITED STATES PATENT AND TRADEMARK OFFICE

Commissioner for Patents
United States Patent and Trademark Office
P.O. Box 1450
Alexandria, VA 22313-1450
www.uspto.gov

MAILED

FEB 23 2010

OFFICE OF PETITIONS

MORRISON & FOERSTER LLP
755 PAGE MILL RD
PALO ALTO, CA 94304-1018

In re Application of	:	
Eugenia M. CORRALES	:	
Application No. 11/804,657	:	DECISION ON PETITION
Filed: May 18, 2007	:	TO WITHDRAW
Attorney Docket No. SUNMP007	:	FROM RECORD
	:	

This is a decision on the Request to Withdraw as attorney or agent of record under 37 C.F.R. § 1.36(b), filed December 3, 2009.

The request is **NOT APPROVED because it is moot**.

A review of the file record indicates that the power of attorney to Christopher B. Eide and the attorneys associated with Customer No. 25226, has been revoked by the assignee of the patent application on January 6, 2010. Accordingly, the request to withdraw under 37 C.F.R. § 1.36(b) is moot.

Telephone inquires concerning this decision should be directed to undersigned at 571-272- 6735.

/Diane C. Goodwyn/
Diane Goodwyn
Petitions Examiner
Office of Petitions

UNITED STATES PATENT AND TRADEMARK OFFICE

Commissioner for Patents
United States Patent and Trademark Office
P.O. Box 1450
Alexandria, VA 22313-1450
www.uspto.gov

FINNEGAN, HENDERSON, FARABOW,
GARRETT & DUNNER LLP
901 NEW YORK AVENUE, NW
WASHINGTON DC 20001-4413

COPY MAILED
JAN 19 2010

In re Application of	:	
ADEL, Peter et al.	:	
Application No. 11/804,694	:	DECISION ON PETITION
Filed: May 18, 2007	:	TO WITHDRAW
Attorney Docket No. **10661.0001-00**	:	FROM RECORD
	:	

This is a decision on the Request to Withdraw as attorney or agent of record under 37 C.F.R. § 1.36(b), filed November 13, 2009.

The request is **NOT APPROVED** because it is moot.

A review of the file record indicates that the power of attorney to Patent Law Professionals has been revoked by the assignee of the patent application on November 23, 2009. Accordingly, the request to withdraw under 37 C.F.R. § 1.36(b) is moot.

All future communications from the Office will continue to be directed to the below-listed address until otherwise notified by applicant.

Telephone inquires concerning this decision should be directed to Michelle R. Eason at 571-272- 4231.

Michelle R. Eason
Paralegal Specialist
Office of Petitions

cc: **FLYNN THIEL BOUTELL & TANIS, P.C.**
2026 RAMBLING ROAD
KALAMAZOO, MI 49008-1631
SUITE 1400
COSTA MESA CA 92626

UNITED STATES PATENT AND TRADEMARK OFFICE

Commissioner for Patents
United States Patent and Trademark Office
P.O. Box 1450
Alexandria, VA 22313-1450
www.uspto.gov

MORRISON & FOERSTER LLP
755 PAGE MILL RD
PALO ALTO, CA 94304-1018

MAILED

FEB 17 2010

OFFICE OF PETITIONS

In re Application of	:	
Eugenia M. Corrales	:	DECISION ON PETITION
Application No. 11/804,695	:	TO WITHDRAW
Filed: May 18, 2007	:	FROM RECORD
Attorney Docket No. SunmP008	:	

This is a decision on the Request to Withdraw as attorney or agent of record under 37 C.F.R. § 1.36(b), filed December 3, 2009.

The request is **NOT APPROVED** because it is moot.

A review of the file record indicates that Morrison & Foerster LLP was revoked as power of attorney by the assignee of the patent application on January 6, 2010. Accordingly, the request to withdraw under 37 C.F.R. § 1.36(b) is moot.

All future communications from the Office will continue to be directed to the below-listed address until otherwise notified by applicant.

Telephone inquires concerning this decision should be directed to the undersigned at 571-272-6059.

A. Kelley

Alicia Kelley
Petitions Examiner
Office of Petitions

cc: THE MUELLER LAW OFFICE, P.C.
12951 HARWICK LANE
SAN DIEGO, CA 92130

UNITED STATES PATENT AND TRADEMARK OFFICE

Commissioner for Patents
United States Patent and Trademark Office
P.O. Box 1450
Alexandria, VA 22313-1450
www.uspto.gov

PHILIP JARVINEN
15 FAIRWAY DRIVE
AMHERST, NH 03031

COPY MAILED
JUL 09 2007
OFFICE OF PETITIONS

In re Application of	:	
Philip O. Jarvinen	:	
Application No. 11/804,701	:	DECISION ON PETITION
Filed: May 18, 2007	:	TO MAKE SPECIAL UNDER
Attorney Docket No.	:	37 CFR 1.102(c)(1)
	:	

This is a decision on the petition under 37 CFR 1.102(c)(1), filed May 18, 2007, to make the above-identified application special based on applicant's age as set forth in M.P.E.P. § 708.02, Section IV.

The petition is **GRANTED**.

A grantable petition to make an application special under 37 CFR 1.102(c)(1) and MPEP § 708.02, Section IV: Applicant's Age must be accompanied by evidence showing that at least one of the applicants is 65 years of age, or more, such as a birth certificate or a statement by applicant. No fee is required

The instant petition includes a declaration statement signed by applicant. Accordingly, the above-identified application has been accorded "special" status.

Telephone inquiries concerning this decision should be directed to undersigned at 571-272-1642.

All other inquiries concerning either the examination or status of the application should be directed to the Technology Center.

This application is being referred to the Office of Initial Patent Examination to await a reply to the Notice to File Corrected Application Papers (Notice) mailed June 14, 2007. This application will be accorded "special" status when pre-examination processing is done.

April M. Wise
Petitions Examiner
Office of Petitions

UNITED STATES PATENT AND TRADEMARK OFFICE

Commissioner for Patents
United States Patent and Trademark Office
P.O. Box 1450
Alexandria, VA 22313-1450
www.uspto.gov

ADAM S. LANGLEY
1132 PINE HILL RD.
MCLEAN, VA 22101

COPY MAILED

OCT 2 0 2008

OFFICE OF PETITIONS

In re Application of :
James Carpenter :
Application No. 11/804,751 :
Filed: May 18, 2007 :
Attorney Docket No. CARP-101 :

ON PETITION

This is a decision on the petition under 37 CFR 1.137(b), filed June 19, 2008, to revive the above-identified application.

The petition is **GRANTED.**

The above-identified application became abandoned for failure to reply in a timely manner to the Notice to File Corrected Application Papers (Notice) mailed June 13, 2007. The Notice set a period for reply of two (2) months from the mail date of the Notice. No extension of time under the provisions of 37 CFR 1.136(a) were obtained. Accordingly, the above-identified application became abandoned on August 14, 2007.

Telephone inquiries concerning this decision should be directed to Irvin Dingle at (571) 272-3210.

This matter is being referred to the Office of Patent Application Processing.

Irvin Dingle
Petitions Examiner
Office of Petitions

UNITED STATES PATENT AND TRADEMARK OFFICE

UNITED STATES DEPARTMENT OF COMMERCE
United States Patent and Trademark Office
Address: COMMISSIONER FOR PATENTS
P.O. Box 1450
Alexandria, Virginia 22313-1450
www.uspto.gov

APPLICATION NO.	FILING DATE	FIRST NAMED INVENTOR	ATTORNEY DOCKET NO.	CONFIRMATION NO.
11/804,752	05/18/2007	Yiling Xu	678-3109 (P14557)	9766

7590 01/12/2010

THE FARRELL LAW FIRM, LLP
290 Broadhollow Road
Suite 210E
Melville, NY 11747

EXAMINER
PEREZ, JULIO R

ART UNIT	PAPER NUMBER
2617	

MAIL DATE	DELIVERY MODE
01/12/2010	PAPER

DECISION GRANTING PETITION UNDER 37 CFR 1.138(d)

The declaration of express abandonment is recognized

This is in response to the petition under 37 CFR 1.138(d), requesting for a refund of any previously paid search fee and excess claims fee in the above-identified application.

The petition is granted.

The express abandonment is recognized. Any previously paid search fee and excess claims fee are hereby refunded.

Telephone inquiries should be directed to the Office of Data Management at (571) 272-4200.

Mimi Farmer

Patent Publication Branch
Office of Data Management

[illegible]
[illegible]
FC: 3224 [illegible]

Adjustment date: 01/13/2010 [illegible]
05/22/2007 EXYALEW1 00000118 11804752
02 FC:1111 -500.00 OP
04 FC:1201 -200.00 OP
05 FC:1202 -400.00 OP

FORM PET651G (Rev. 08/07)

UNITED STATES PATENT AND TRADEMARK OFFICE

Commissioner for Patents
United States Patent and Trademark Office
P.O. Box 1450
Alexandria, VA 22313-1450
www.uspto.gov

Karen J. Jorgenson
376 Velma's Way
Clarksville TN 37042

COPY MAILED

MAY 09 2008

OFFICE OF PETITIONS

In re Application of

Karen Jean Jorgenson

Application No. 11/804,766

Filed: May 21, 2007

Attorney Docket No.

DECISION ON PETITION

This is a decision on the petition to withdraw the holding of abandonment under 37 CFR 1.181(a), filed March 28, 2008.

The petition is **granted**.

This application was held abandoned on September 6, 2007, after no reply was received to the Notice to File Corrected Application Papers mailed July 5, 2007, which set a shortened period for reply of two-months from its mailing date. Extensions of the time set for reply under 37 CFR 1.136(a) were available. No response was received within the allowable period and the application became abandoned on September 6, 2007. A Notice of Abandonment was mailed March 19, 2008. The instant petition was filed on March 28, 2008. Petitioner maintains that the notice of July 5, 2007, was never received.

Section 711.03(c)(II) of the *Manual of Patent Examining Procedure* ("MPEP") provides that in order to establish non-receipt of an Office action so as prove that the imposition of a holding of abandonment is improper, petitioner must: 1) provide a statement to the Office indicating that the Office action was not received by petitioner; 2) include in the statement an attestation to the fact that a review of the file jacket and docket records maintained by petitioner indicates that the Office action was not received; and 3) provide a copy of the docket record where the non-received Office communication would have been entered had it been received and docketed.

It is noted that petitioner has not provided a copy of the docket record where the non-received Office action would have been entered had it been received. It is further noted that petitioner is a *pro se* applicant; the burden of proof as to the docket records imposed by Section 711.03(c)(II) cited above is deemed onerous for the *pro se* applicant. Accordingly, Petitioner's statement as to the non-receipt of Office action is, therefore, presumed true. Petitioner is cautioned that Petitioner must inform the Office immediately if, upon further investigation, the representation of non-receipt of the Office action is determined to be factually untrue.

Petitioner has otherwise met the burden of proof as established by Section 711.03(c)(II) of the MPEP. The holding of abandonment is, therefore, withdrawn.

The corrected drawings filed March 28, 2008, are noted.

The application file is being forwarded to the Office if Patent Application Processing for further review.

Questions concerning this decision should be directed to the undersigned at (571) 272-3222.

Kenya A. McLaughlin
Petitions Attorney
Office of Petitions

UNITED STATES PATENT AND TRADEMARK OFFICE

Commissioner for Patents
United States Patent and Trademark Office
P.O. Box 1450
Alexandria, VA 22313-1450
www.uspto.gov

SEYFARTH SHAW LLP
WORLD TRADE CENTER EAST
TWO SEAPORT LANE, SUITE 300
BOSTON, MA 02210-2008

COPY MAILED

JUN 0 2 2008

OFFICE OF PETITIONS

In re Application of	:	
Clint CLEMENS	:	
Application No. 11/804,778	:	DECISION ON PETITION
Filed: May 21, 2007	:	TO WITHDRAW
Attorney Docket No. 24489/4-CON	:	FROM RECORD

This is a decision on the Request to Withdraw as attorney or agent under 37 C.F.R. § 1.36(b) or 37 C.F.R. § 10.40 filed February 15, 2008.

The request is **NOT APPROVED**.

A review of the file record indicates that Brian L. Michaelis does not have power of attorney in this patent application nor is there any statement or evidence of record of employment in or otherwise being engaged in the proceedings in this patent application. Accordingly, the request to withdraw under 37 C.F.R. § 1.36(b) is not applicable.

All future communications from the Office will continue to be directed to the above-identified address until otherwise properly notified by the applicant.

Telephone inquires concerning this decision should be directed to the undersigned at 571-272-6735.

Diane Goodwyn
Petitions Examiner
Office of Petitions

UNITED STATES PATENT AND TRADEMARK OFFICE

Commissioner for Patents
United States Patent and Trademark Office
P.O. Box 1450
Alexandria, VA 22313-1450
www.uspto.gov

GERALD SPINKS
103 EDWARDS STREET
ABBERVILLE, LA 70510

COPY MAILED

JUN 19 2008

OFFICE OF PETITIONS

In re Application of	:	
Joseph P. DeGeare, et al.	:	
Application No. 11/804,800	:	DECISION ON PETITION
Filed: May 21, 2007	:	TO WITHDRAW
Attorney Docket No. 284BOT/US124	:	FROM RECORD
	:	

This is a decision on the Request to Withdraw as attorney or agent of record under 37 C.F.R. § 1.36(b), filed November 19, 2007.

The request is **DISMISSED** as moot.

A review of the file record indicates that the power of attorney to Gerald Spinks has been revoked by the assignee of the patent application on January 31, 2008. Accordingly, the request to withdraw under 37 C.F.R. § 1.36(b) is moot.

All future communications from the Office will continue to be directed to the below-listed address until otherwise notified by applicant.

Telephone inquires concerning this decision should be directed to undersigned at 571-272- 1642.

April M. Wise
Petitions Examiner
Office of Petitions

cc: DUANE MORRIS, LLP
3200 SOUTHWEST FREEWAY
SUITE 3150
HOUSTON, TX 77027

UNITED STATES PATENT AND TRADEMARK OFFICE

UNITED STATES DEPARTMENT OF COMMERCE
United States Patent and Trademark Office
Address: COMMISSIONER FOR PATENTS
P.O. Box 1450
Alexandria, Virginia 22313-1450
www.uspto.gov

APPLICATION NO.	FILING DATE	FIRST NAMED INVENTOR	ATTORNEY DOCKET NO.	CONFIRMATION NO.
11/804,815	05/21/2007	Byung-Jik Kim	5000-1-960	1064

7590 10/07/2008
CHA & REITER, LLC
210 ROUTE 4 EAST STE 103
PARAMUS, NJ 07652

EXAMINER
CHAN, JASON

ART UNIT	PAPER NUMBER
2613	

MAIL DATE	DELIVERY MODE
10/07/2008	PAPER

DECISION GRANTING PETITION UNDER 37 CFR 1.138(d)

The declaration of express abandonment is recognized

This is in response to the petition under 37 CFR 1.138(d), requesting for a refund of any previously paid search fee and excess claims fee in the above-identified application.

The petition is granted.

The express abandonment is recognized. Any previously paid search fee and excess claims fee are hereby refunded.

Telephone inquiries should be directed to the Office of Data Management at (571) 272-4200.

Nioni Farmer

Patent Publication Branch
Office of Data Management

Refund Ref:
10/07/2008 NFARMER 0000164685

CHECK Refund Total: $2150.00

Adjustment date: 10/07/2008 NFARMER
05/23/2007 LWONDIM1 00000012 11804815
02 FC:1111 -500.00 OP
04 FC:1202 -450.00 OP
05 FC:1201 -1200.00 OP

FORM PET651G (Rev. 08/07)

UNITED STATES PATENT AND TRADEMARK OFFICE

Commissioner for Patents
United States Patent and Trademark Office
P.O. Box 1450
Alexandria, VA 22313-1450
www.uspto.gov

STETINA BRUNDA GARRED & BRUCKER
75 ENTERPRISE, SUITE 250
ALISO VIEJO CA 92656

MAILED

FEB 24 2009

OFFICE OF PETITIONS

In re Application of :
Charles E.d Markley et al :
Application No. 11/804,841 : DECISION ON PETITION
Filed: May 21, 2007 :
Attorney Docket No. SFCUT-018C2 :

This is a decision on the petition under the unintentional provisions of 37 CFR 1.137(b), filed January 23, 2009, to revive the above-identified application.

The petition is **GRANTED**.

The petition satisfies the conditions for revival pursuant to the provisions of 37 CFR 1.137(b) in that (1) the reply in the form of an RCE and a previously filed amendment; (2) the petition fee; and (3) the required statement of unintentional delay have been received. Accordingly, the reply to the final rejection mailed May 30, 2008, is accepted as having been unintentionally delayed.

This is also in response to the paper filed January 23, 2009, under 37 CFR 1.27(g)(2) requesting that status as a Small Entity be removed.

In accordance with the January 23, 2009 request, status as a Small Entity has been removed.

Telephone inquiries concerning this decision should be directed to the undersigned at (571) 272-3208.

This application is being referred to Technology Center AU 3723 for appropriate action by the Examiner in the normal course of business on the reply received January 23, 2009.

Karen Creasy

Karen Creasy
Petitions Examiner
Office of Petitions

Docket No.: SFCUT-018C2

IN THE UNITED STATES PATENT AND TRADEMARK OFFICE

Applicants:	Charles E. Markley et al.	)	Confirmation No.	1122
Serial No.:	11/804,841	)	Art Unit:	3727
Filed:	05/21/2007	)	Examiner:	Carter, Monica Smith
For:	SKID PLATE FOR A CONCRETE SAW	)		

Commissioner of Patents
P.O. Box 1450
Alexandria, VA 22313-1450

NOTIFICATION OF LOSS OF ENTITLEMENT TO SMALL ENTITY STATUS (37 C.F.R. § 1.27(g)(2))

Applicant hereby notifies the Patent and Trademark Office that it is no longer entitled to status as a small entity as of June 5, 2007, and that the assertion for small entity status, set forth by Soff-Cut International, Inc. on April 28, 2006, is hereby withdrawn.

If any additional fees are required, please charge Deposit Account Number 19-4330.

Date: 1/23/09 By: Lowell Anderson

Customer No.: 007663

Lowell Anderson
Registration No. 30,990
STETINA BRUNDA GARRED & BRUCKER
75 Enterprise, Suite 250
Aliso Viejo, California 92656
Telephone: (949) 855-1246
Fax: (949) 855-6371

UNITED STATES PATENT AND TRADEMARK OFFICE

Commissioner for Patents
United States Patent and Trademark Office
P.O. Box 1450
Alexandria, VA 22313-1450
www.uspto.gov

JAMES J. MULLEN
C/O CELANESE LTD.
400 HWY 77 S.
PO BOX 428
BISHOP TX 78343

COPY MAILED

APR 0 9 2009

OFFICE OF PETITIONS

In re Application of	:	
Scates et al.	:	
Application No. 11/804,883	:	ON PETITION
Filed: May 21, 2007	:	
Attorney Docket No. C-7273	:	

This is a decision on the petition under 37 C.F.R. § 1.137(b), filed January 23, 2009, to revive the above-identified application.

The petition is **GRANTED**.

The petition satisfies the requirements of 37 CFR 1.137(b) in that petitioner has supplied (1) the reply in the form of a Response under 37 CFR 1.111, (2) the petition fee, and (3) a proper statement of unintentional delay.

An extension of time under 37 CFR 1.136 must be filed prior to the expiration of the maximum extendable period for reply. See In re Application of S., 8 USPQ2d 1630, 1631 (Comm'r Pats. 1988). Accordingly, since the $1,110.00 extension of time fee submitted with the petition on January 23, 2009 was subsequent to the maximum extendable period for reply, this fee is unnecessary and will be credited to petitioner's deposit account as authorized.

There is no indication that the person signing the instant petition was ever given a power of attorney or authorization of agent to prosecute the above-identified application. Therefore, the change of correspondence address filed concurrently with the instant petition cannot be accepted because it was not signed by an attorney of record. See MPEP §§ 601.03 and 405. A courtesy copy of this decision is being mailed to the address given on the petition; however, the Office will mail all future correspondence solely to the address of record.

It is not apparent whether the statement of unintentional delay was signed by a person who would have been in a position of knowing that the entire delay in filing the required reply from the due date for the reply until the filing of a grantable petition pursuant to 37 CFR 1.137(b) was unintentional. Nevertheless, in accordance with 37 CFR 10.18, the statement is accepted as constituting a certification of unintentional delay. However, in the event that petitioner has no knowledge that the delay was unintentional, petitioner must make such an inquiry to ascertain that, in fact, the delay was unintentional. If petitioner discovers that the delay was intentional, petitioner must notify the Office.

Telephone inquiries concerning this decision should be directed to the undersigned at (571) 272-3206.

This matter is being referred to Technology Center AU 1621 for further examination on the merits.

Liana Walsh
Petitions Examiner
Office of Petitions

cc: MARTIN CONNAUGHTON
IP LEGAL DEPARTMENT
CELANESE INTERNATIONAL CORPORATION
CLEAR LAKE TECHNICAL CENTER
9502 BAYPORT BLVD.
PASADENA, TX 77507

UNITED STATES PATENT AND TRADEMARK OFFICE

Commissioner for Patents
United States Patent and Trademark Office
P.O. Box 1450
Alexandria, VA 22313-1450
www.uspto.gov

DAN M. DE LA ROSA, ESQ
SUITE 24C
300 E. 77TH STREET
NEW YORK, NY 10021

COPY MAILED
DEC 29 2009
OFFICE OF PETITIONS

In re Application of	:	
Robert Demars	:	
Application No. 11/804,919	:	DECISION ON PETITION
Filed: May 22, 2007	:	
Attorney Docket No. P-0111US	:	

This is a decision on the petition under the unintentional provisions of 37 CFR 1.137(b), filed October 15, 2009, to revive the above-identified application.

This application became abandoned for failure to timely pay the issue and publication fees on or before September 2, 2009, as required by the Notice of Allowance and Fee(s) Due, mailed June 2, 2009. Accordingly, the date of abandonment of this application is September 3, 2009.

The petition satisfies the requirements of 37 CFR 1.137(b) in that petitioner has supplied (1) the reply in the form of payment of the issue fee of $755 and the publication fee of $300, (2) the petition fee of $810; and (3) a proper statement of unintentional delay.

In view of the above, the petition is **GRANTED**.

Telephone inquiries concerning this decision should be directed to undersigned at (571) 272-1642. All other inquiries concerning this application should be directed to the Office of Data Management at their hotline 571-272-4200.

This application is being referred to Office of Data Management for processing into a patent.

April M. Wise
Petitions Examiner
Office of Petitions

UNITED STATES PATENT AND TRADEMARK OFFICE

Commissioner for Patents
United States Patent and Trademark Office
P.O. Box 1450
Alexandria, VA 22313-1450
www.uspto.gov

COPY MAILED

MAY 07 2009

OFFICE OF PETITIONS

James J. MULLEN
c/o Celanese Ltd.
400 HWY 77 S / PO BOX 428
BISHOP TX 78343

In re Application of	:	
Mark O. Scates et al.	:	
Application No. 11/804,921	:	DECISION ON PETITION
Filed: May 21, 2007	:	
Attorney Docket No. 7274	:	

This is a decision on the petition under the unintentional provisions of 37 CFR 1.137(b), filed January 23, 2009, to revive the above-identified application.

The petition is **GRANTED**.

The application became abandoned for failure to reply in a timely manner to the non-final Office action mailed, December 17, 2007, which set a shortened statutory period for reply of three (3) months. No extensions of time under the provisions of 37 CFR 1.136(a) were obtained. Accordingly, the application became abandoned on March 18, 2008.

The petition satisfies the requirements of 37 CFR 1.137(b) in that petitioner has supplied (1) the reply in the form of an amendment, (2) the petition fee of $1,620, and (3) a proper statement of unintentional delay.

It is not apparent whether the person signing the statement of unintentional delay was in a position to have firsthand or direct knowledge of the facts and circumstances of the delay at issue. Nevertheless, such statement is being treated as having been made as the result of a reasonable inquiry into the facts and circumstances of such delay. See 37 CFR 10.18(b) and Changes to

Patent Practice and Procedure; Final Rule Notice, 62 Fed. Reg. 53131, 53178 (October 10, 1997), 1203 Off. Gaz. Pat. Office 63, 103 (October 21, 1997). In the event that such an inquiry has not been made, petitioner must make such an inquiry. If such inquiry results in the discovery that it is not correct that the entire delay in filing the required reply from the due date for the reply until the filing of a grantable petition pursuant to 37 CFR 1.137(b) was unintentional, petitioner must notify the Office.

There is no indication that the person signing the petition was ever given a power of attorney to prosecute the application. If the person signing the petition desires to receive future correspondence regarding this application, the appropriate power of attorney document must be submitted. Accordingly, since the change of address filed with the instant petition is signed by a person not of record it will not be entered. While a courtesy copy of this decision is being mailed to the person signing the petition, all future correspondence will be directed to the address currently of record until appropriate instructions are received.

An extension of time under 37 CFR 1.136 must be filed prior to the expiration of the maximum extendable period for reply. *See* In re Application of S., 8 USPQ2d 1630, 1631 (Comm'r Pats. 1988). Since the $1,110 extension of time fee submitted with the petition on January 23, 2009, was subsequent to the maximum extendable period for reply, this fee is unnecessary and will be credited to petitioner's deposit account.

Telephone inquiries concerning this decision should be directed to JoAnne Burke at (571) 272-4584.

This application is being referred to Technology Center AU 1621 for appropriate action by the Examiner in the normal course of business on the reply received.

Ramesh Krishnamurthy

Ramesh Krishnamurthy
Petitions Examiner
Office of Petitions

cc: Martin Connaughton
Celanese International Corporation
Clear Lake Technical
9502 Bayport Blvd.
Pasadena, TX 77507

UNITED STATES PATENT AND TRADEMARK OFFICE

Commissioner for Patents
United States Patent and Trademark Office
P.O. Box 1450
Alexandria, VA 22313-1450
www.uspto.gov
DIW Mar-09

JAMES J. MULLEN
C/O CELANESE LTD.
400 HWY 77 S / PO BOX 428
BISHOP TX 78343

COPY MAILED
MAR 1 0 2009
OFFICE OF PETITIONS

In re Application of :
Scates et al. :
Application Number: 11/804922 :
Filing Date: 05/21/2007 : ON PETITION
Attorney Docket Number: C-7272 :

This is a decision on the petition under 37 CFR 1.137(b)[1] filed on January 23, 2009, to revive the above-identified application.

The petition is **GRANTED**.

The application became abandoned on March 18, 2008, for failure to timely respond to the non-final Office action mailed on December 17, 2007, which set a three (3) month shortened statutory period for reply. No extensions of the time for reply in accordance with 37 CFR 1.136(a) were obtained. Notice of Abandonment was mailed on July 3, 2008.

---

[1] Effective December 1, 1997, the provisions of 37 CFR 1.137(b) now provide that where the delay in reply was unintentional, a petition may be filed to revive an abandoned application or a lapsed patent pursuant to 37 CFR 1.137(b). A grantable petition filed under the provisions of 37 CFR 1.137(b) must be accompanied by:

(1) the required reply, unless previously filed. In a nonprovisional application abandoned for failure to prosecute, the required reply may be met by the filing of a continuing application. In a nonprovisional application filed on or after June 8, 1995, and abandoned for failure to prosecute, the required reply may also be met by the filing of a request for continued examination in compliance with § 1.114. In an application or patent, abandoned or lapsed for failure to pay the issue fee or any portion thereof, the required reply must be the payment of the issue fee or any outstanding balance thereof. In an application abandoned for failure to pay the publication fee, the required reply must include payment of the publication fee.

(2) the petition fee as set forth in 37 CFR 1.17(m);

(3) a statement that the entire delay in filing the required reply from the due date for the reply until the filing of a grantable petition pursuant to 37 CFR 1.137(b) was unintentional. The Director may required additional information where there is a question whether the delay was unintentional; and

(4) any terminal disclaimer (and fee as set forth in 37 CFR 1.20(d)) required pursuant to 37 CFR 1.137(c)).

Receipt of the amendment filed with the subject petition is acknowledged.

It is not apparent whether the person signing the statement of unintentional delay was in a position to have firsthand or direct knowledge of the facts and circumstances of the delay at issue. Nevertheless, such statement is being treated as having been made as the result of a reasonable inquiry into the facts and circumstances of such delay.[2] In the event that such an inquiry has not been made, petitioner must make such an inquiry. If such inquiry results in the discovery that it is not correct that the entire delay in filing the required reply from the due date for the reply until the filing of a grantable petition pursuant to 37 CFR 1.137(b) was unintentional, petitioner must notify the Office.

An extension of time under 37 CFR 1.136 must be filed prior to the expiration of the maximum extendable period for reply.[3] The three (3)-month extension request filed on January 23, 2008, was submitted more than five (5) months after the end of the period for reply to the Office action mailed on December 17, 2007, and therefore is unnecessary. The extension of time fee paid on January 23, 2009, will be refunded to counsel.

The change of correspondence address filed on January 23, 2009 cannot be accepted because it is not signed by a patent practitioner of record, an assignee as provided for under 37 CFR 3.71(b), or all of the applicants.[4] A properly signed change of correspondence address must be filed if the correspondence address is to be changed. A courtesy copy of this decision will be mailed to the address in the petition. All future correspondence, however, will be mailed solely to the address of record.

The application is referred to Technology Center Art Unit 2617 for further processing.

---

[2] See 37 CFR 10.18(b) and Changes to Patent Practice and Procedure; Final Rule Notice, 62 Fed. Reg. 53131, 53178 (October 10, 1997), 1208 Off. Gaz. Pat. Office 63, 103 (October 21, 1997).

[3] See In re Application of S., 8 USPQ2d 1630, 1631 (Comm'r Pats. 1988).

[4] 37 CFR 1.33.

Telephone inquiries concerning this matter may be directed to the undersigned at (571) 272-3231.

D Wood

Douglas I. Wood
Senior Petitions Attorney
Office of Petitions

Cc:

MARTIN CONNAUGHTON
CELANESE INTERNATIONAL CORPORATION
CLEAR LAKE TECHNICAL CENTER
9502 BAYPORT BLVD
PASADENA TX 77507

UNITED STATES PATENT AND TRADEMARK OFFICE

Commissioner for Patents
United States Patent and Trademark Office
P.O. Box 1450
Alexandria, VA 22313-1450
www.uspto.gov

MARTIN CONNAUGHTON
CELANESE INTERNATIONAL CORPORATION
CLEAR LAKE TECHNICAL CENTER
9502 BAYPORT BLVD.
PASADENA, TX 77507

COPY MAILED

MAR 2 5 2009

OFFICE OF PETITIONS

In re Application of :
Mark O. Scates, et al. :
Application No. 11/804,933 : ON PETITION
Filed: May 21, 2007 :
Attorney Docket No. C-7276 :

This is a decision on the petition, filed January 23, 2009, to revive the above-identified application under the provisions of 37 CFR 1.137(b).

There is no indication that the petition is signed by a registered patent attorney or patent agent of record. However, in accordance with 37 CFR 1.34, the signature of Mr. Martin Connaughton appearing on the correspondence shall constitute a representation to the United States Patent and Trademark Office that he is authorized to represent the particular party on whose behalf he acts.

The petition is **GRANTED**.

The above-identified application became abandoned for failure to reply in a timely manner to the Restriction Requirement mailed April 29, 2008, which set a shortened statutory period for reply of one (1) month or thirty (30) days (whichever is later). A Notice of Abandonment was mailed on January 12, 2009. In response, on January 23, 2009, the present petition was filed.

The petition satisfies the requirements of 37 CFR 1.137(b) in that petitioner has supplied (1) the response in the form of an election of the invention to be examined; (2) the petition fee of $1,620; and (3) an adequate statement of unintentional delay[1].

The offer to make the belated payment of the 2-month extension of time fee under 37 CFR 1.136(a) is unnecessary. Extensions of time under 37 CFR 1.136 are available only if asked for "prior to or with the response." If the question of abandonment arises when the provisions of 37 CFR 1.136 can no longer

[1] 37 CFR 1.137(b)(3) requires a statement that the entire delay in filing the required reply from the due date for the reply until the filing of a grantable petition pursuant to 37 CFR 1.137(b) was unintentional. While the statement is not made by an attorney of record, such statement is being treated as having been made as the result of a reasonable inquiry into the facts and circumstances of such delay. See 37 CFR 10.18(b) and Changes to Patent Practice and Procedure; Final Rule Notice, 62 Fed. Reg. 53131, 53178 (October 10, 1997), 1203 Off. Gaz. Pat. Office 63, 103 (October 21, 1997). In the event that such an inquiry has not been made, petitioner must make such an inquiry. If such inquiry results in the discovery that it is not correct that the entire delay in filing the required reply from the due date for the reply until the filing of a grantable petition pursuant to 37 CFR 1.137(b) was unintentional, petitioner must notify the Office.

be used, then the application is abandoned when the unextended time for response has expired. In no case, however, may an applicant respond later than the maximum time period set by statute. Since the $490 extension fee submitted with the petition is submitted after the extendable period, the fee being refunded to counsel's deposit account.

The application file is being forwarded to Technology Center AU 1621 for appropriate action by the Examiner in the normal course of business on the reply received January 23, 2009.

Telephone inquiries concerning this decision may be directed to the undersigned at (571) 272-3204. All other inquiries regarding this application should be directed to the Technology Center.

Sherry D. Brinkley
Petitions Examiner
Office of Petitions

UNITED STATES PATENT AND TRADEMARK OFFICE

Commissioner for Patents
United States Patent and Trademark Office
P.O. Box 1450
Alexandria, VA 22313-1450
www.uspto.gov

LAWSON & PERSSON, P.C.
P.O. BOX 712
LACONIA NH 03247

MAILED

JUN 04 2010

OFFICE OF PETITIONS

In re Application of	:	
Velsor, Wesley Van	:	
Application No. 11/805,021	:	ON PETITION
Filed: May 22, 2007	:	
Attorney Docket No. 1237-010	:	

This is a decision on the petition under 37 C.F.R. § 1.137(b), filed April 26, 2010, to revive the above-identified application.

The petition is **GRANTED**.

The petition satisfies the requirements of 37 CFR 1.137(b) in that petitioner has supplied (1) the reply in the form of an Amendment, (2) the petition fee, and (3) a proper statement of unintentional delay.

Telephone inquiries concerning this decision should be directed to the undersigned at (571) 272-3206.

This matter is being referred to Technology Center AU 1797 for further examination on the merits.

Liana Walsh
Petitions Examiner
Office of Petitions

UNITED STATES PATENT AND TRADEMARK OFFICE

Commissioner for Patents
United States Patent and Trademark Office
P.O. Box 1450
Alexandria, VA 22313-1450
www.uspto.gov

MURABITO HAO & BARNER LLP
THIRD FLOOR
TWO NORTH MARKET STREET
SAN JOSE CA 95113

COPY MAILED

FEB 19 2008

OFFICE OF PETITIONS

In re Application of	:	
Shintani, et al.	:	DECISION ACCORDING STATUS
Application No. 11/805,029	:	UNDER 37 CFR 1.47(a)
Filed: May 21, 2007	:	
Attorney Docket No. SONY-50W8643.01	:	

This is in response to the petition under 37 CFR 1.47(b), filed January 28, 2008, which is being treated as a petition under 37 CFR 1.47(a).

The petition under 37 CFR 1.47(a) is **GRANTED**.

Petitioner has demonstrated that inventor Iwamura has refused to sign the declaration after having been presented with the application papers.

The above-identified application and papers have been reviewed and found to be in compliance with 37 CFR 1.47(a). Accordingly, the above-identified application is hereby accorded Rule 1.47(a) status. As provided in 37 CFR 1.47(c), this Office will forward notice of this application's filing to the non-signing inventors at the last known address provided on the declaration. Notice of the filing of this application will also be published in the Official Gazette.

The $200 petition fee and $130 surcharge for late filing of the declaration have been charged to Deposit Account No. 50-4160, as authorized.

The matter is being forwarded to the Office of Patent Application Processing for pre-examination processing.

Telephone inquiries related to this decision may be directed to the undersigned at (571)272-3207.

Cliff Congo
Petitions Attorney
Office of Petitions

UNITED STATES PATENT AND TRADEMARK OFFICE

Commissioner for Patents
United States Patent and Trademark Office
P.O. Box 1450
Alexandria, VA 22313-1450
www.uspto.gov

RYUICHI IWAMURA
11864 PASEO LUCIDO
#2083
SAN DIEGO CA 92128

COPY MAILED

FEB 19 2008

OFFICE OF PETITIONS

In re Application of
Peter Shintani, Ryuichi Iwamura
Application No. 11/805,029
Filed: May 21, 2007
Title: Method and System for Improving Quality of a Multi-Component Display

LETTER

Dear Mr. Iwamura:

You are named as a joint inventor in the above-identified United States patent application filed under the provisions of 35 USC 116 (United States Code) and 37 CFR 1.47(a), Rules of Practice in Patent Cases. Should a patent be granted on the application you will be designated therein as a joint inventor.

As a joint inventor, you are entitled to inspect any paper in the file wrapper of the application, order copies of all or any part thereof (at a prepaid cost per 37 CFR 1.19) or make your position of record in the application. Alternatively, you may arrange to do any of the preceding through a registered patent attorney or agent presenting written authorization from you. If you care to join the application, agent of record would presumably assist you. Joining in the application would entail the filing of an appropriate oath or declaration by you pursuant to 37 CFR 1.63.

Telephone inquiries regarding this communication should be directed to Petitions Attorney Cliff Congo at (571)272-3207. Requests for information regarding your application should be directed to the File Information Unit at (703) 308-2733. Information regarding how to pay for and order a copy of the application, or a specific paper in the application, should be directed to the Certification Division at (703) 308-9726 or 1-800-972-6382 (outside the Washington D.C. area).

Cliff Congo
Petitions Attorney
Office of Petitions

PTO/SB/130 (03-08)
Approved for use through 03/31/2008. OMB 0651- 0031
U.S. Patent and Trademark Office; U.S. DEPARTMENT OF COMMERCE
Under the Paperwork Reduction Act of 1995, no persons are required to respond to a collection of information unless it contains a valid OMB control number

PETITION TO MAKE SPECIAL BASED ON AGE FOR ADVANCEMENT OF EXAMINATION UNDER 37 CFR 1.102(c)(1)

Application Information

Application Number	11805043	Confirmation Number	1733	Filing Date	2007-05-21
Attorney Docket Number (optional)	1155-0003	Art Unit	1742	Examiner	
First Named Inventor	Michael Oehring				
Title of Invention	TITANIUM ALUMINIDE BASED ALLOY				

Attention: Office of Petitions

An application may be made special for advancement of examination upon filing of a petition showing that the applicant is 65 years of age, or more. No fee is required with such a petition. See 37 CFR 1.102(c)(1) and MPEP 708.02 (IV).

APPLICANT HEREBY PETITIONS TO MAKE SPECIAL FOR ADVANCEMENT OF EXAMINATION IN THIS APPLICATION UNDER 37 CFR 1.102(c)(1) and MPEP 708.02 (IV) ON THE BASIS OF THE APPLICANT'S AGE.

A grantable petition requires one of the following items:
(1) Statement by one named inventor in the application that he/she is 65 years of age, or more; or
(2) Certification by a registered attorney/agent having evidence such as a birth certificate, passport, driver's license, etc. showing one named inventor in the application is 65 years of age, or more.

Name of Inventor who is 65 years of age, or older

Given Name	Middle Name	Family Name	Suffix
Fritz		Appel	

A signature of the applicant or representative is required in accordance with 37 CFR 1.33 and 10.18.
Please see 37 CFR 1.4(d) for the format of the signature.

Select (1) or (2) :

○ (1) I am an inventor in this application and I am 65 years of age, or more.

◉ (2) I am an attorney or agent registered to practice before the Patent and Trademark Office, and I certify that I am in possession of evidence, and will retain such in the application file record, showing that the inventor listed above is 65 years of age, or more.

Signature	/Richard R. Michaud/	Date (YYYY-MM-DD)	2008-03-03
Name	Richard R. Michaud	Registration Number	40088

PTO/SB/130 (03-08)
Approved for use through 03/31/2008. OMB 0651- 0031
U.S. Patent and Trademark Office; U.S. DEPARTMENT OF COMMERCE
Under the Paperwork Reduction Act of 1995, no persons are required to respond to a collection of information unless it contains a valid OMB control number

Privacy Act Statement

The Privacy Act of 1974 (P.L. 93-579) requires that you be given certain information in connection with your submission of the attached form related to a patent application or patent. Accordingly, pursuant to the requirements of the Act, please be advised that: (1) the general authority for the collection of this information is 35 U.S.C. 2(b)(2); (2) furnishing of the information solicited is voluntary; and (3) the principal purpose for which the information is used by the U.S. Patent and Trademark Office is to process and/or examine your submission related to a patent application or patent. If you do not furnish the requested information, the U.S. Patent and Trademark Office may not be able to process and/or examine your submission, which may result in termination of proceedings or abandonment of the application or expiration of the patent.

The information provided by you in this form will be subject to the following routine uses:

1. The information on this form will be treated confidentially to the extent allowed under the Freedom of Information Act (5 U.S.C. 552) and the Privacy Act (5 U.S.C. 552a). Records from this system of records may be disclosed to the Department of Justice to determine whether the Fr eedom of Information Act requires disclosure of these records.

2. A record from this system of records may be disclosed, as a routine use, in the course of presenting evidence to a court, magistrate, or administrative tribunal, including disclosures to opposing counsel in the course of settlement negotiations.

3. A record in this system of records may be disclosed, as a routine use, to a Member of Congress submitting a request involving an individual, to whom the record pertains, when the individual has requested assistance from the Member with respect to the subject matter of the record.

4. A record in this system of records may be disclosed, as a routine use, to a contractor of the Agency having need for the information in order to perform a contract. Recipients of information shall be required to comply with the requirements of the Privacy Act of 1974, as amended, pursuant to 5 U.S.C. 552a(m).

5. A record related to an International Application filed under the Patent Cooperation Treaty in this system of records may be disclosed, as a routine use, to the International Bureau of the World Intellectual Property Organization, pursuant to the Patent Cooperation Treaty.

6. A record in this system of records may be disclosed, as a routine use, to another federal agency for purposes of National Security review (35 U.S.C. 181) and for review pursuant to the Atomic Energy Act (42 U.S.C. 218(c)).

7. A record from this system of records may be disclosed, as a routine use, to the Administrator, General Services, or his/her designee, during an inspection of records conducted by GSA as part of that agency's responsibility to recommend improvements in records management practices and programs, under authority of 44 U.S.C. 2904 and 2906. Such disclosure shall be made in accordance with the GSA regulations governing inspection of records for this purpose, and any other relevant (i.e., GSA or Commerce) directive. Such disclosure shall not be used to make determinations about indivi duals.

8. A record from this system of records may be disclosed, as a routine use, to the public after either publication of the application pursuant to 35 U.S.C. 122(b) or issuance of a patent pursuant to 35 U.S.C. 151. Further, a record may be disclosed, subject to the limitations of 37 CFR 1.14, as a routine use, to the public if the record was filed in an application which became abandoned or in which the proceedings were terminated and which application is referenced by either a published application, an application open to public inspections or an issued patent.

9. A record from this system of records may be disclosed, as a routine use, to a Federal, State, or local law enforcement agency, if the USPTO becomes aware of a violation or potential violation of law or regulation.

UNITED STATES PATENT AND TRADEMARK OFFICE

Commissioner for Patents
United States Patent and Trademark Office
P.O. Box 1450
Alexandria, VA 22313-1450
www.uspto.gov

In re Application of
Michael Oehring

Application No. 11805043

Filed: May 21,2007

Attorney Docket No. 1155-0003

:DECISION ON PETITION TO MAKE SPECIAL
:UNDER 37 CFR 1.102(c)(1)

This is a decision on the electronic petition under 37 CFR 1.102 (c)(1) ,filed 03-MAR-2008 to make the above-identified application special based on applicant's age as set forth in MPEP § 708.02, Section IV.

The petition is **GRANTED**.

A grantable petition to make an application special under 37 CFR 1.102(c)(1), MPEP § 708.02, Section IV: Applicant's Age must include a statement by applicant or a registered practitioner having evidence that applicant is at least 65 years of age. No fee is required.

Accordingly, the above-identified application has been accorded “special” status and will be taken up for action by the examiner upon the completion of all pre-examination processing.

Telephone inquires concerning this electronic decision should be directed to the Electronic Business Center at 866-217-9197.

All other inquires concerning either the examination or status of the application should be directed to the Technology Center.

UNITED STATES PATENT AND TRADEMARK OFFICE

COMMISSIONER FOR PATENTS
UNITED STATES PATENT AND TRADEMARK OFFICE
P.O. BOX 1450
ALEXANDRIA, VA 22313-1450
WWW.USPTO.GOV

Paper No.

Lawrence R. Burns, Esquire
310 Coulter Building
231 S. Main Street
Greensburg PA 15601

COPY MAILED

JUL 24 2008

In re Application of	:	
Ricky Lee Yowonske	:	DECISION ON PETITION
Application No. 11/805,110	:	PURSUANT TO
Filed: May 22, 2007	:	37 C.F.R. § 1.137(b)
Title: TREE STEP	:	

This is a decision on the petition pursuant to 37 C.F.R. § 1.137(b), to revive the above-identified application, filed on March 18, 2008.

This petition is **DISMISSED**.

The above-identified application became abandoned for failure to reply in a timely manner to the Notice to File Corrected Application Papers (notice), mailed June 13, 2007, which set a shortened statutory period for reply of two months. This notice indicated that replacement drawings would be required. No response was received, and no extensions of time under the provisions of 37 C.F.R. § 1.136(a) were requested. Accordingly, the above-identified application became abandoned on August 14, 2007. A notice of abandonment was mailed on February 26, 2008.

A grantable petition pursuant to 37 C.F.R. § 1.137(b) must be accompanied by:

(1) The reply required to the outstanding Office action or notice, unless previously filed;
(2) The petition fee as set forth in 37 C.F.R. § 1.17(m);

(3) A statement that the entire delay in filing the required reply from the due date for the reply until the filing of a grantable petition pursuant to this paragraph was unintentional. The Commissioner may require additional information where there is a question whether the delay was unintentional, and;
(4) Any terminal disclaimer (and fee as set forth in 37 C.F.R. § 1.20(d)) required pursuant to paragraph (d) of this section.

With this petition, Petitioner has submitted the petition fee and the required statement of unintentional delay. As such, Petitioner has met requirements (2) and (3) of Rule 1.137(b). The fourth requirement is not applicable, as a terminal disclaimer is not required.

Regarding the first requirement, the requirement has not been satisfied because Petitioner did not submit the required reply to the Office action. The required reply is the reply sufficient to have avoided abandonment, had such reply been timely filed[1] (*i.e.*, replacement drawings).

With this petition, Petitioner has submitted replacement drawings. However, **these replacement drawings cannot be accepted, as they are not labeled as such.** See 37 C.F.R. § 1.84(c), which sets forth, *in pertinent part*:

> Each drawing sheet submitted after the filing date of an application must be identified as either "Replacement Sheet" or "New Sheet" pursuant to § 1.121(d).

See also 37 C.F.R. § 1.121(d), which sets forth, *in pertinent part*:

> Drawings: One or more application drawings shall be amended in the following manner: Any changes to an application drawing must be in compliance with § 1.84 and must be submitted on a replacement sheet of drawings which shall be an attachment to the amendment document and, in the top margin, labeled "Replacement Sheet".

Any reply must be submitted within **TWO MONTHS** from the mail date of this decision. Extensions of time under 37 C.F.R. § 1.136(a) are permitted. The reply should include a cover letter entitled "Renewed Petition pursuant to 37 C.F.R. § 1.137(b)." This is not a final agency action within the meaning of 5 U.S.C § 704.

---

1 See M.P.E.P. § 711.03(c).

The renewed petition should indicate in a prominent manner that the attorney handling this matter is Paul Shanoski, and may be submitted by mail[2], hand-delivery[3], or facsimile[4]. Registered users of EFS-Web may alternatively submit a response to this decision via EFS-Web[5].

If responding by mail, Petitioner is advised not to place the undersigned's name on the envelope. Only the information that appears in the footnote should be included - adding anything else to the address will delay the delivery of the response to the undersigned.

The general phone number for the Office of Petitions that should be used for status requests is (571) 272-3282. Telephone inquiries regarding this decision should be directed to the undersigned at (571) 272-3225[6].

/Paul Shanoski/
Paul Shanoski
Senior Attorney
Office of Petitions

---

2 Mail Stop Petition, Commissioner for Patents, United States Patent and Trademark Office, P.O. Box 1450, Alexandria, VA, 22313-1450.
3 Customer Window, Randolph Building, 401 Dulaney Street, Alexandria, VA, 22314.
4 (571) 273-8300- please note this is a central facsimile number.
5 https://sportal.uspto.gov/authenticate/authenticateuserlocalepf.html
6 Petitioner will note that all practice before the Office should be in writing, and the action of the Office will be based exclusively on the written record in the Office. See 37 C.F.R. § 1.2. As such, Petitioner is reminded that no telephone discussion may be controlling or considered authority for any of Petitioner's further action(s).

UNITED STATES PATENT AND TRADEMARK OFFICE

Commissioner for Patents
United States Patent and Trademark Office
P.O. Box 1450
Alexandria, VA 22313-1450
www.uspto.gov

Paper No.

Lawrence R. Burns, Esquire
310 Coulter Building
231 S. Main Street
Greensburg PA 15601

COPY MAILED

FEB 0 5 2009

OFFICE OF PETITIONS

In re Application of	:	
Ricky Lee Yowonske	:	
Application No. 11/805,110	:	DECISION ON RENEWED PETITION
Filed: May 22, 2007	:	PURSUANT TO
Title: TREE STEP	:	37 C.F.R. § 1.137(b)
	:	

This is a decision on the renewed petition pursuant to 37 C.F.R. § 1.137(b), to revive the above-identified application, filed on August 4, 2008.

This renewed petition is **GRANTED**.

The above-identified application became abandoned for failure to reply in a timely manner to the Notice to File Corrected Application Papers (notice), mailed June 13, 2007, which set a shortened statutory period for reply of two months. This notice indicated that replacement drawings would be required. No response was received, and no extensions of time under the provisions of 37 C.F.R. § 1.136(a) were requested. Accordingly, the above-identified application became abandoned on August 14, 2007. A notice of abandonment was mailed on February 26, 2008.

A grantable petition pursuant to 37 C.F.R. § 1.137(b) must be accompanied by:

(1) The reply required to the outstanding Office action or notice, unless previously filed;
(2) The petition fee as set forth in 37 C.F.R.

§ 1.17(m);

(3) A statement that the entire delay in filing the required reply from the due date for the reply until the filing of a grantable petition pursuant to this paragraph was unintentional. The Commissioner may require additional information where there is a question whether the delay was unintentional, and;

(4) Any terminal disclaimer (and fee as set forth in 37 C.F.R. § 1.20(d)) required pursuant to paragraph (d) of this section.

An original petition pursuant to 37 C.F.R. § 1.137(b) was filed on March 18, 2008 along with the petition fee and the required statement of unintentional delay, and was dismissed via the mailing of a decision on July 24, 2008.

With this renewed petition, Petitioner has submitted acceptable replacement drawings.

The first three requirements of Rule 1.137(b) have been met. The fourth requirement is not applicable, as a terminal disclaimer is not required.

The Office of Patent Application Processing (OPAP) will be notified of this decision so that the application may receive further processing in due course. Petitioner will receive appropriate notifications regarding the fees owed, if any, and other information in due course from OPAP.

The general phone number for OPAP is 571-272-4000. Telephone inquiries **regarding this decision** should be directed to the undersigned at (571) 272-3225.[1]

/Paul Shanoski/
Paul Shanoski
Senior Attorney
Office of Petitions

---

1 Petitioner will note that all practice before the Office should be in writing, and the action of the Office will be based exclusively on the written record in the Office. See 37 C.F.R. § 1.2. As such, Petitioner is reminded that no telephone discussion may be controlling or considered authority for any further action(s) of Petitioner.

UNITED STATES PATENT AND TRADEMARK OFFICE

Commissioner for Patents
United States Patent and Trademark Office
P.O. Box 1450
Alexandria, VA 22313-1450
www.uspto.gov

ALLERGAN, INC.
2525 DUPONT DRIVE, T2-7H
IRVINE, CA 92612-1599

MAILED

JUL 19 2010

OFFICE OF PETITIONS

In re Application of	:	
David F. WOODWARD, et *al.*	:	
Application No. 11/805,122	:	DECISION GRANTING PETITION
Filed: May 22, 2007	:	UNDER 37 CFR 1.313(c)(2)
Attorney Docket No. **17481CON**	:	

This is a decision on the petition under 37 CFR 1.313(c)(2), filed July 19, 2010, to withdraw the above-identified application from issue after payment of the issue fee.

The petition is **GRANTED**.

The above-identified application is withdrawn from issue for consideration of a submission under 37 CFR 1.114 (request for continued examination). *See* 37 CFR 1.313(c)(2).

Petitioner is advised that the issue fee paid on May 19, 2010 cannot be refunded. If, however, this application is again allowed, petitioner may request that it be applied towards the issue fee required by the new Notice of Allowance.[1]

Telephone inquiries should be directed to the undersigned at (571) 272-7253.

This application is being referred to Technology Center AU 1618 for processing of the request for continued examination under 37 CFR 1.114 and for consideration of the concurrently filed information disclosure statement.

/Monica A. Graves/
Petitions Examiner, Office of Petitions

---

[1] *The request to apply the issue fee to the new Notice may be satisfied by completing and returning the new Part B – Fee(s) Transmittal Form (along with any balance due at the time of submission). Petitioner is advised that the Issue Fee Transmittal Form* ***must*** *be completed and timely submitted to avoid abandonment of the application.*

UNITED STATES PATENT AND TRADEMARK OFFICE

Commissioner for Patents
United States Patent and Trademark Office
P.O. Box 1450
Alexandria, VA 22313-1450
www.uspto.gov

ROZSA LAW GROUP LC
18757 BURBANK BOULEVARD
SUITE 220
TARZANA, CA 91356-3346

MAILED

MAY 19 2009

OFFICE OF PETITIONS

In re Application of
Carole A. Willcocks
Application No. 11/805,134
Filed: May 22, 2007
Attorney Docket No. 43180.002

DECISION GRANTING PETITION
UNDER 37 CFR 1.137(f)

This is a decision in response to the petition, filed March 23, 2009, under 37 CFR 1.137(f) to revive the instant nonprovisional application for failure to timely notify the U.S. Patent and Trademark (USPTO) of the filing of an application in a foreign country, or under a multinational treaty that requires publication of applications eighteen months after filing.

The petition is **GRANTED**.

Petitioner states that the instant nonprovisional application is the subject of an application filed in an eighteen month publication country on May 21, 2008. However, the USPTO was unintentionally not notified of this filing within 45 days subsequent to the filing of the subject application in an eighteen month publication country.

In view of the above, this application became abandoned pursuant to 35 U.S.C. §122(b)(2)(B)(iii) and 37 CFR 1.213(c) for failure to timely notify the Office of the filing of an application in a foreign country or under a multilateral international agreement that requires publication of applications 18 months after filing.

A petition to revive an application abandoned pursuant to 35 U.S.C. § 122(b)(2)(B)(iii) for failure to notify the USPTO of a foreign filing must be accompanied by:

(1) the required reply which is met by the notification of such filing in a foreign country or under a multinational treaty;
(2) the petition fee as set forth in 37 CFR 1.17(m); and
(3) a statement that the entire delay in filing the required reply from the due date of the reply until the filing of a grantable petition was unintentional.

The petition is found to be in compliance with 37 CFR 1.137(b). Accordingly, the failure to timely notify the USPTO of a foreign or international filing within 45 days after the date of filing of such foreign or international application as provided by 35 U.S.C. § 122(b)(2)(B)(iii) and 37 CFR 1.213(c) is accepted as having been unintentionally delayed.

The previous Request and Certification under 35 U.S.C. § 122(b)(2)(B)(i) has been rescinded. A Notice Regarding Rescission of Nonpublication Request which sets forth the projected publication date of August 20, 2009 accompanies this decision on petition.

Any inquiries concerning this decision may be directed to the undersigned at (571) 272-3204.

This application is being referred to the Technology Center 3736 for further prosecution.

Sherry D. Brinkley
Petitions Examiner
Office of Petitions

ATTACHMENT: Notice Regarding Rescission of Nonpublication Request

UNITED STATES PATENT AND TRADEMARK OFFICE

UNITED STATES DEPARTMENT OF COMMERCE
United States Patent and Trademark Office
Address: COMMISSIONER FOR PATENTS
P.O. Box 1450
Alexandria, Virginia 22313-1450
www.uspto.gov

APPLICATION NUMBER	FILING OR 371(C) DATE	FIRST NAMED APPLICANT	ATTY. DOCKET NO./TITLE
11/805,134	05/22/2007	Carole A. Willcocks	43180.002

CONFIRMATION NO. 2442

NONPUBLICATION RESCISSION LETTER

21907
ROZSA LAW GROUP LC
18757 BURBANK BOULEVARD
SUITE 220
TARZANA, CA 91356-3346

OC000000035990784

Date Mailed: 05/14/2009

Communication Regarding Rescission Of Nonpublication Request and/or Notice of Foreign Filing

Applicant's rescission of the previously-filed nonpublication request and/or notice of foreign filing is acknowledged. The paper has been reflected in the Patent and Trademark Office's (USPTO's) computer records so that the earliest possible projected publication date can be assigned.

The projected publication date is 08/20/2009.

If applicant rescinded the nonpublication request before or on the date of "foreign filing,"[1] then no notice of foreign filing is required.

If applicant foreign filed the application after filing the above application and before filing the rescission, and the rescission did not also include a notice of foreign filing, then a notice of foreign filing (not merely a rescission) is required to be filed within 45 days of the date of foreign filing. See 35 U.S.C. § 122(b)(2)(B)(iii), and Clarification of the United States Patent and Trademark Office's Interpretation of the Provisions of 35 U.S.C. § 122(b)(2)(B)(ii)-(iv), 1272 Off. Gaz. Pat. Office 22 (July 1, 2003).

If a notice of foreign filing is required and is not filed within 45 days of the date of foreign filing, then the application becomes abandoned pursuant to 35 U.S.C. § 122(b)(2)(B)(iii). In this situation, applicant should either file a petition to revive or notify the Office that the application is abandoned. See 37 CFR 1.137(f). Any such petition to revive will be forwarded to the Office of Petitions for a decision. Note that the filing of the petition will not operate to stay any period of reply that may be running against the application.

Questions regarding petitions to revive should be directed to the Office of Petitions at (571) 272-3282.

[1] Note, for purpose of this notice, that "foreign filing" means "filing an application directed to the same invention in another country, or under a multilateral international agreement, that requires publication of applications 18 months after filing".

/sdbrinkley/

Office of Data Management, Application Assistance Unit (571) 272-4000, or (571) 272-4200, or 1-888-786-0101

UNITED STATES PATENT AND TRADEMARK OFFICE

UNITED STATES DEPARTMENT OF COMMERCE
United States Patent and Trademark Office
Address: COMMISSIONER FOR PATENTS
P.O. Box 1450
Alexandria, Virginia 22313-1450
www.uspto.gov

APPLICATION NO.	FILING DATE	FIRST NAMED INVENTOR	ATTORNEY DOCKET NO.	CONFIRMATION NO.
11/805,188	05/22/2007	Charles Dameron	049450-00235-1-1	1870

3705 7590 09/01/2009
ECKERT SEAMANS CHERIN & MELLOTT
600 GRANT STREET
44TH FLOOR
PITTSBURGH, PA 15219

EXAMINER
NOAKES, SUZANNE MARIE

ART UNIT	PAPER NUMBER
1656	

MAIL DATE	DELIVERY MODE
09/01/2009	PAPER

Please find below and/or attached an Office communication concerning this application or proceeding.

The time period for reply, if any, is set in the attached communication.

UNITED STATES PATENT AND TRADEMARK OFFICE

Commissioner for Patents
United States Patent and Trademark Office
P.O. Box 1450
Alexandria, VA 22313-1450
www.uspto.gov

Gwen R. Acker Wood, Ph.D., J.D.
Eckert Seamans Cherin & Mellott, LLC
44th Floor
600 Grant Street
Pittsburgh, PA 15219

In re Application of Charles Dameron Serial No.: 11/805,188 Filed: May 22, 2007 Attorney Docket No.: 049450-235-1-1	: : DECISION ON PETITION TO : ACCEPT COLOR DRAWINGS/PHOTOGRAPHS

This is a decision on the petition filed on May 22, 2007 to accept color drawings under 37 CFR 1.84(a)(2).

A review shows that all requirements are met.

The petition to accept color drawings/photographs is **GRANTED**.

Cecilia Tsang
SPE, Art Unit 1654

UNITED STATES PATENT AND TRADEMARK OFFICE

Commissioner for Patents
United States Patent and Trademark Office
P.O. Box 1450
Alexandria, VA 22313-1450
www.uspto.gov

COPY MAILED

JUL 30 2009

OFFICE OF PETITIONS

HOUSTON OFFICE OF
NOVAK DRUCE AND QUIGG LLP
1000 LOUISIANA STREET
FIFTY-THIRD FLOOR
HOUSTON TX 77002

In re Application of	:	
Lynn et al.	:	DECISION ON PETITION
Application No. 11/805,235	:	TO WITHDRAW
Filed: May 22, 2007	:	FROM RECORD
Attorney Docket No. 8243.005.NPUS00	:	

This is a decision on the Request to Withdraw as attorney or agent of record under 37 C.F.R. § 1.36(b), filed June 18, 2009.

The request is **NOT APPROVED**.

The Office strongly encourages practitioner(s) requesting withdrawal from representation as practitioner of record in an application to review the record to determine whether he or she is, in fact, of record and how he or she was made of record. For example, the practitioner(s) should determine whether he or she was appointed by naming each practitioner individually or through the use of a Customer Number. If the practitioner(s) was appointed by a specific designation, then the Request should ask that each specified practitioner be withdrawn and should list each practitioner(s) in the Request.

In the instant application, the practitioners were appointed via Customer Number and must request to withdraw accordingly.

Further, the Office will only accept correspondence address changes to the most current address information provided for the assignee of the entire interest *who properly became of record under 37 CFR 3.71,* or, if no assignee of the entire interest has properly been made of record, the most current address information provided for the first named inventor. 37 CFR 3.71(c) states:

> *An assignee becomes of record either in a national patent application or a reexamination proceeding by filing a statement in compliance with § 3.73(b) that is signed by a party who is authorized to act on behalf of the assignee.*

The Statement under 37 CFR 3.73(b) is no longer current as the assignee is now Squid Soap, LP, not Airbourne Health, Inc. A newly updated statement should be submitted.

For the reasons listed above, the request cannot be granted. All future communications from the Office will be directed to above-listed address until otherwise properly notified by the applicant or a proper change of correspondence address have been submitted.

There is an outstanding Office action mailed June 2, 2009 which requires a reply. Failure to timely do so will result in abandonment of the instant application.

Telephone inquires concerning this decision should be directed to the undersigned at (571) 272-3206. All other inquires concerning either the examination or status of the application should be directed to the Technology Center.

Liana Walsh
Petitions Examiner
Office of Petitions

UNITED STATES PATENT AND TRADEMARK OFFICE

Commissioner for Patents
United States Patent and Trademark Office
P.O. Box 1450
Alexandria, VA 22313-1450
www.uspto.gov

HOUSTON OFFICE OF
NOVAK DRUCE AND QUIGG LLP
1000 LOUISIANA STREET
FIFTY-THIRD FLOOR
HOUSTON TX 77002

COPY MAILED

SEP 2 3 2009

OFFICE OF PETITIONS

In re Application of	:	
Lynn et al.	:	DECISION ON PETITION
Application No. 11/805,235	:	TO WITHDRAW
Filed: May 22, 2007	:	FROM RECORD
Attorney Docket No. 8243.005.NPUS00	:	

This is a decision on the Request to Withdraw as attorney or agent of record under 37 C.F.R. § 1.36(b), filed August 5, 2009 and September 2, 2009.

The request is **APPROVED**.

A grantable request to withdraw as attorney/agent of record must be signed by every attorney/agent seeking to withdraw or contain a clear indication that one attorney is signing on behalf of another/others. The Office will require the practitioner(s) to certify that he, she or they have: (1) given reasonable notice to the client, prior to the expiration of the reply period, which the practitioner(s) intends to withdraw from employment; (2) delivered to the client or a duly authorized representative of the client all papers and property (including funds) to which the client is entitled; and (3) notified the client of any replies that may be due and the time frame within which the client must respond, pursuant to 37 CFR 10.40 (c).

The request was signed by Tracy W. Druce on behalf of all attorneys/agents of record who are associated with Customer Number 68769. All attorneys/agents associated with Customer Number 68769 have been withdrawn. Applicants are reminded that there is no attorney of record at this time.

Although the August 2009 Request to Withdraw still improperly referenced SquidSoap, LP as the new correspondence address of record, the September 2009 Request to Withdraw properly referenced the first-named inventor. Accordingly, all future correspondence will be directed to the first-named inventor, John Lynn, at the address indicated below.

There is an outstanding Office action mailed June 2, 2009 which requires a reply. Failure to timely do so will result in abandonment of the application.

Telephone inquires concerning this decision should be directed to the undersigned at (571) 272-3206. All other inquires concerning either the examination or status of the application should be directed to the Technology Center.

Liana Walsh
Petitions Examiner
Office of Petitions

cc: JOHN MORRIS LYNN
333 KING ARTHUR CT.
AUSTIN TX 78746

UNITED STATES PATENT AND TRADEMARK OFFICE

Commissioner for Patents
United States Patent and Trademark Office
P.O. Box 1450
Alexandria, VA 22313-1450
www.uspto.gov

STEPTOE & JOHNSON LLP
1330 CONNECTICUT AVENUE, N.W.
WASHINGTON DC 20036

COPY MAILED

JUN 17 2008

OFFICE OF PETITIONS

In re Application of :
McClellan et al. :
Application No. 11/805,237 : ON PETITION
Filed: May 22, 2007 :
Attorney Docket No. 16874.0010 :

This is a decision on the petition filed August 24, 2007, requesting that the above-identified application be accorded a filing date of May 22, 2007, rather than the presently accorded date of May 23, 2007. The petition is properly treated as a petition under 37 CFR 1.10(d).

Applicant requests the earlier filing date on the basis that the application was purportedly deposited with the U.S. Postal Service (USPS) as Express Mail on May 22, 2007, pursuant to 37 CFR 1.10. In support, applicant has submitted a copy of Express Mail label No. EV 915870904 US, showing a handwritten "date-in" of "5-23-07" and a "May 22, 2007" USPS receipt stamp. The same Express Mail receipt number appears on the original "Utility Patent Application Transmittal." The Express Mail label number also appears on the Certificate of Mailing by "Express Mail" and includes a statement of express mailing dated May 22, 2007 on the cover page for the application papers.

To further substantiate applicant's allegation that the application papers for this file were deposited on the requested filing date, an independent search was made of the USPS Express Mail Track and Confirm records which resulted in a finding that the package in question was in fact accepted on May 22, 2007 at 5:40 p.m. at the Dallas, TX USPS.

Therefore, in view of all the evidence, it is concluded that the application was deposited in Express Mail service on May 22, 2007. Accordingly, the instant application is entitled to a filing date of May 22, 2007 and has been so accorded.

The petition is **GRANTED**.

A petition under 37 CFR 1.10(d) does not require a petition fee and none has been collected.

This matter is being referred to the Office of Patent Application Processing for further **processing with a filing date of May 22, 2007, along with a corrected filing receipt.** Thereafter, the matter will be referred to Technology Center 3661 for examination in due course.

Telephone inquiries concerning this matter may be directed the undersigned at (571) 272-3206.

Liana Walsh
Petitions Examiner
Office of Petitions